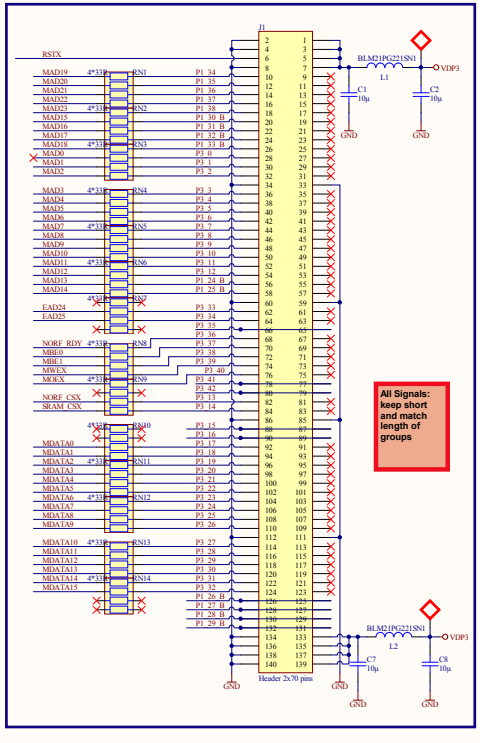

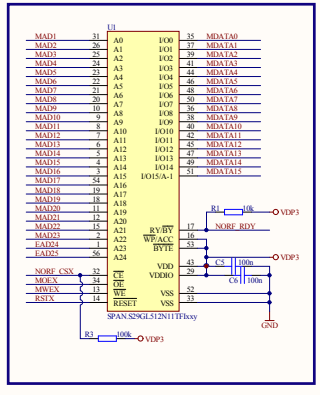

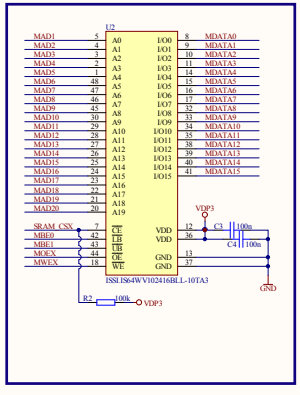

Used Components

U1: S29GL256S10TFI010 is soldered at following modules:
- SN: W100401 .. W100410
EAD24 line is required: MB9DF126 Port P3_33 is connected for I/O port emulation to have full memory access
U1: S29GL128S90TFI01 is soldered at following modules
- SN: W126311 ... W126340

History

Doc Rev.:	Changes:
0.1:	- initial version (derived from MEM-003)
0.2:	- changed signal assignement of RN7 - RN9
0.3:	- Added used Flash partnumber for first board slot
1.0:	- Added used Flash partnumber for second board slot

/**********/
/* (C) Fujitsu Semiconductor Europe GmbH */
/* The schematic is provided without charge for demonstration purposes */
/* only, subject to alterations. */
/* FSEU does not warrant that the deliverables do not infringe any */
/* third party intellectual property right (IPR). In the event that */
/* the deliverables infringe a third party IPR it is the sole */
/* responsibility of the customer to obtain necessary licenses to */
/* continue the usage of the deliverable. */
/* FSEU disclaims any warranty and liability. */
/* (V1.3) */
/**********/

All parts in brackets [] are not solderd

FUJITSU	Product: MEM-FCR4-004		Fujitsu Semiconductor Europe GmbH http://mcu.emea.fujitsu.com microcontroller_info@de.fujitsu.com
	Sheet: 1 of 1	Doc Revision: V1.0	
		HW Revision: Rev0	
	Drawn by: Olaf Behrendt	Date: 6/5/2012	
	File: 01 schematics.SchDoc		