EVAL-S28HL512T SEMPER Octal memory module

CONTENTS

PAGE	DESCRIPTION
01	Title Page
02	Block Diagram
03	Memory and Connectors
04	Revision History

Drawing	Numbers
PCBA	121-60655-01
PCB	600-60654-01
FAB DRW	610-60654-01
ASSY DRW	620-60654-01
SCH DRW	630-60655-01

Legal Disclaimer :
The information given in this document shall in no event be regarded as a guarantee of conditions or characteristics. With respect to any examples or hints given herein, any typical values stated herein and/or any information regarding the application of the device, Infineon Technologies hereby disclaims any and all warranties and liabilities of any kind, including without limitation, warranties of non-infringement of intellectual property rights of any third party.

SCH Title : EVAL-S28HL512T				
Page Title: Title				
Size	Document Number	Drawn By	Approved By	Rev
A4	630-60655-01	TARE	MAUN	01
Date: Tuesday, May 07, 2024			Sheet 1 of 4	

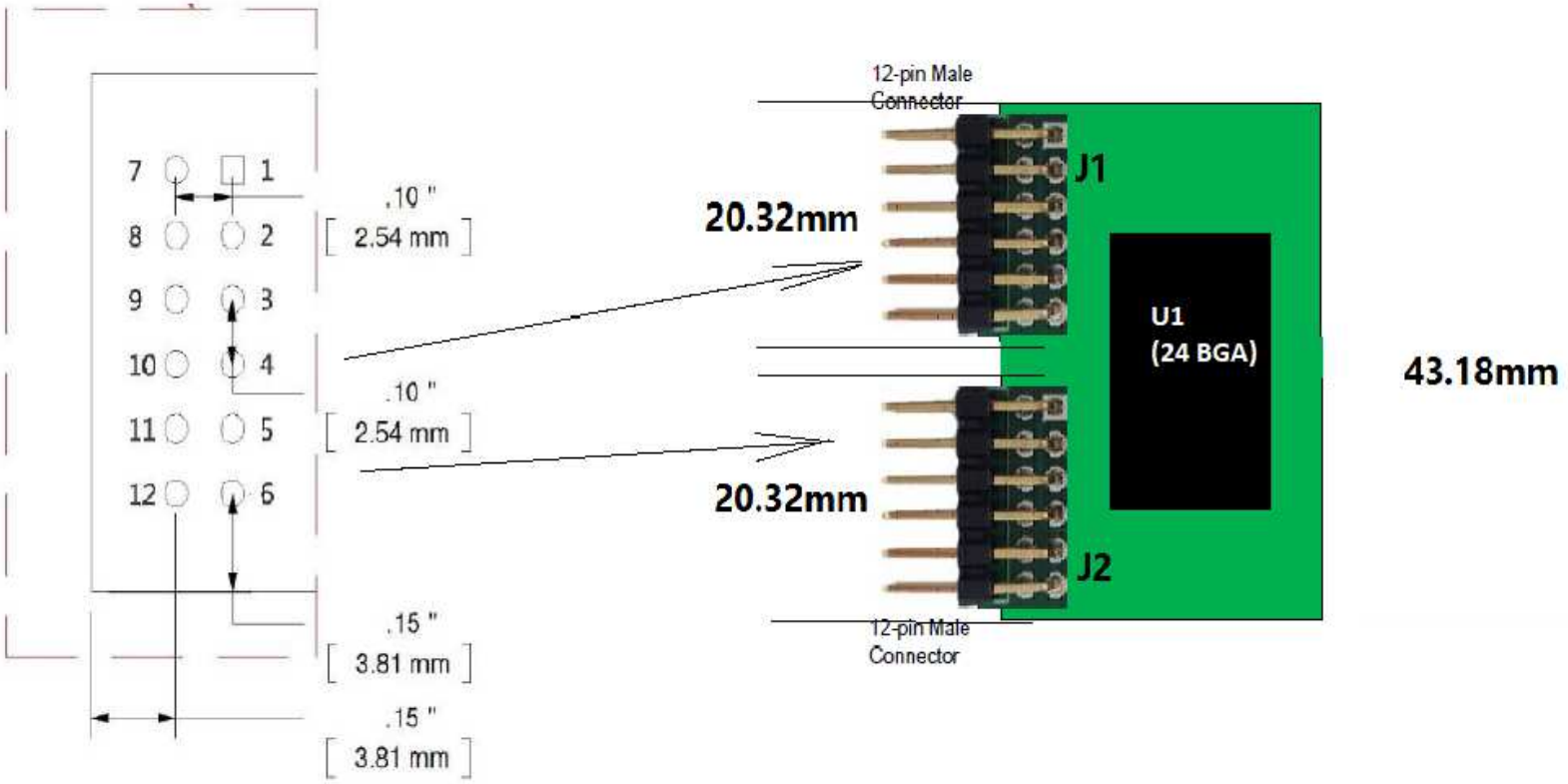

Legal Disclaimer :
The information given in this document shall in no event be regarded as a guarantee of conditions or characteristics. With respect to any examples or hints given herein, any typical values stated herein and/or any information regarding the application of the device, Infineon Technologies hereby disclaims any and all warranties and liabilities of any kind, including without limitation, warranties of non-infringement of intellectual property rights of any third party.

SCH Title : EVAL-S28HL512T				
Page Title: Block Diagram				
Size	Document Number	Drawn By	Approved By	Rev
A4	630-60655-01	TARE	MAUN	01
Date: Tuesday, May 07, 2024			Sheet 2 of 4	

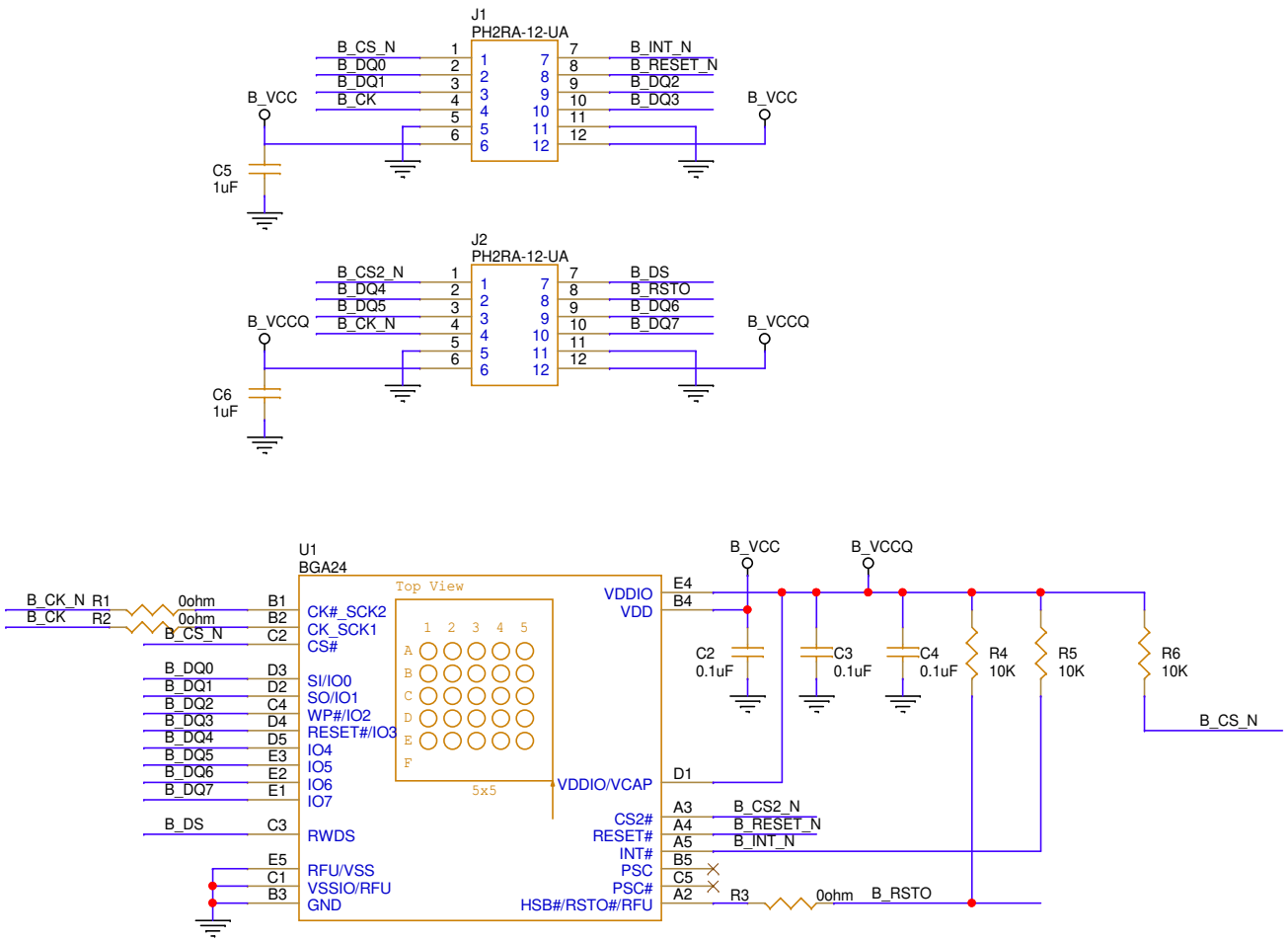

Legal Disclaimer :

The information given in this document shall in no event be regarded as a guarantee of conditions or characteristics. With respect to any examples or hints given herein, any typical values stated herein and/or any information regarding the application of the device, Infineon Technologies hereby disclaims any and all warranties and liabilities of any kind, including without limitation, warranties of non-infringement of intellectual property rights of any third party.

SCH Title :	**EVAL-S28HL512T**			
Page Title:	**Memory and Connectors**			
Size	Document Number	Drawn By	Approved By	Rev
A4	**630-60655-01**	**TARE**	**MAUN**	**01**
Date:	Tuesday, May 07, 2024	Sheet	**3** of **4**	

REVISION HISTORY

REV	DESCRIPTION OF CHANGE	DATE
01	Initial release	11/3/2022

Legal Disclaimer :
The information given in this document shall in no event be regarded as a guarantee of conditions or characteristics. With respect to any examples or hints given herein, any typical values stated herein and/or any information regarding the application of the device, Infineon Technologies hereby disclaims any and all warranties and liabilities of any kind, including without limitation, warranties of non-infringement of intellectual property rights of any third party.

SCH Title : EVAL-S28HL512T

Page Title: Revision history

Size	Document Number	Drawn By	Approved By	Rev
A4	630-60655-01	TARE	MAUN	01

Date: Tuesday, May 07, 2024