EVAL-SS25HL512T SEMPER S25HL512T memory module

CONTENTS

PAGE	DESCRIPTION
01	Title Page
02	Block Diagram
03	Memory and Connectors
04	Revision History

Drawing Numbers	
PCBA	121-60627-01
PCB	600-60627-01
FAB DRW	610-60627-01
ASSY DRW	620-60627-01
SCH DRW	630-60627-01

Legal Disclaimer :
The information given in this document shall in no event be regarded as a guarantee of conditions or characteristics. With respect to any examples or hints given herein, any typical values stated herein and/or any information regarding the application of the device, Infineon Technologies hereby disclaims any and all warranties and liabilities of any kind, including without limitation, warranties of non-infringement of intellectual property rights of any third party.

SCH Title : EVAL-S25HL512T

Page Title: Title

Size	Document Number	Drawn By	Approved By	Rev
A4	630-60627-01	SRIRAMAN	TAREESH	01

Date: Thursday, July 07, 2022 Sheet 1 of 4

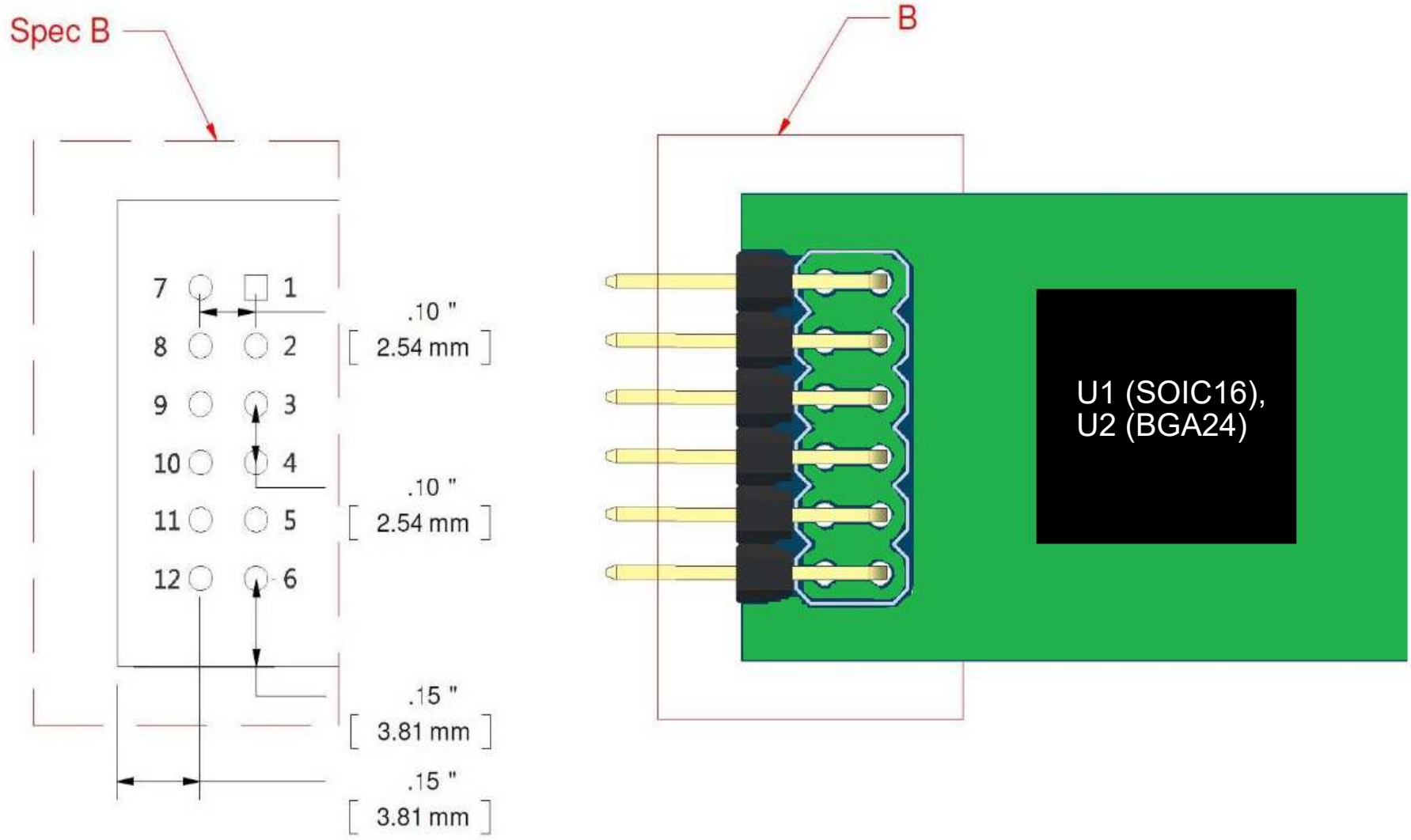

Standard 12-pin male connector placement on Pmod boards.

Legal Disclaimer :
The information given in this document shall in no event be regarded as a guarantee of conditions or characteristics. With respect to any examples or hints given herein, any typical values stated herein and/or any information regarding the application of the device, Infineon Technologies hereby disclaims any and all warranties and liabilities of any kind, including without limitation, warranties of non-infringement of intellectual property rights of any third party.

SCH Title :	**EVAL-S25HL512T**			
Page Title:	**Block Diagram**			
Size	Document Number	Drawn By	Approved By	Rev
A4	**630-60627-01**	**SRIRAMAN**	**TAREESH**	**01**
Date:	Thursday, July 07, 2022	Sheet	**2** of **4**	

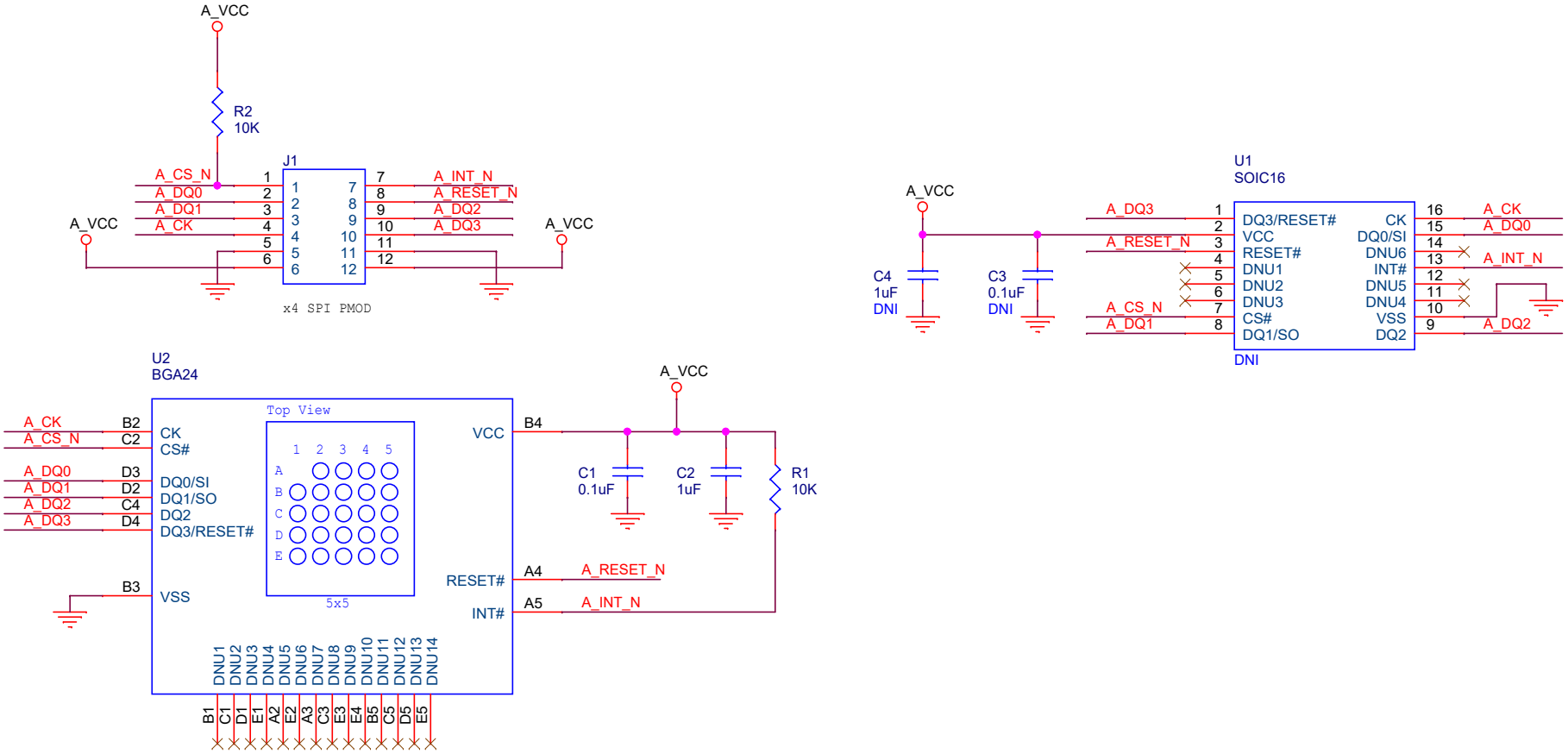

Legal Disclaimer :
The information given in this document shall in no event be regarded as a guarantee of conditions or characteristics. With respect to any examples or hints given herein, any typical values stated herein and/or any information regarding the application of the device, Infineon Technologies hereby disclaims any and all warranties and liabilities of any kind, including without limitation, warranties of non-infringement of intellectual property rights of any third party.

SCH Title :	**EVAL-S25HL512T**			
Page Title:	**Memory and Connectors**			
Size	Document Number	Drawn By	Approved By	Rev
A4	**630-60627-01**	**SRIRAMAN**	**TAREESH**	**01**
Date:	Wednesday, September 14, 2022	Sheet	**3** of **4**	

REVISION HISTORY

REV	DESCRIPTION OF CHANGE	DATE
01	Initial release	11/11/2021

Legal Disclaimer :
The information given in this document shall in no event be regarded as a guarantee of conditions or characteristics. With respect to any examples or hints given herein, any typical values stated herein and/or any information regarding the application of the device, Infineon Technologies hereby disclaims any and all warranties and liabilities of any kind, including without limitation, warranties of non-infringement of intellectual property rights of any third party.

SCH Title : EVAL-S25HL512T

Page Title: Revision history

Size	Document Number	Drawn By	Approved By	Rev
A4	630-60627-01	SRIRAMAN	TAREESH	01

Date: Thursday, July 07, 2022 Sheet 4 of 4