EVAL-S25FS256T SEMPER Nano S25FS256T memory module

CONTENTS

PAGE	DESCRIPTION
01	Title Page
02	Block Diagram
03	Memory and Connectors
04	Revision History

Drawing Numbers	
PCBA	121-60636-01
PCB	600-60636-01
FAB DRW	610-60636-01
ASSY DRW	620-60636-01
SCH DRW	630-60636-01

Legal Disclaimer :
The information given in this document shall in no event be regarded as a guarantee of conditions or characteristics. With respect to any examples or hints given herein, any typical values stated herein and/or any information regarding the application of the device, Infineon Technologies hereby disclaims any and all warranties and liabilities of any kind, including without limitation, warranties of non-infringement of intellectual property rights of any third party.

SCH Title : EVAL-S25FS256T

Page Title: Title Page

Size	Document Number	Drawn By	Approved By	Rev
A4	630-60636-01	SENTHILKUMAR	TARE	1.0

Date: Monday, October 17, 2022 Sheet 1 of 3

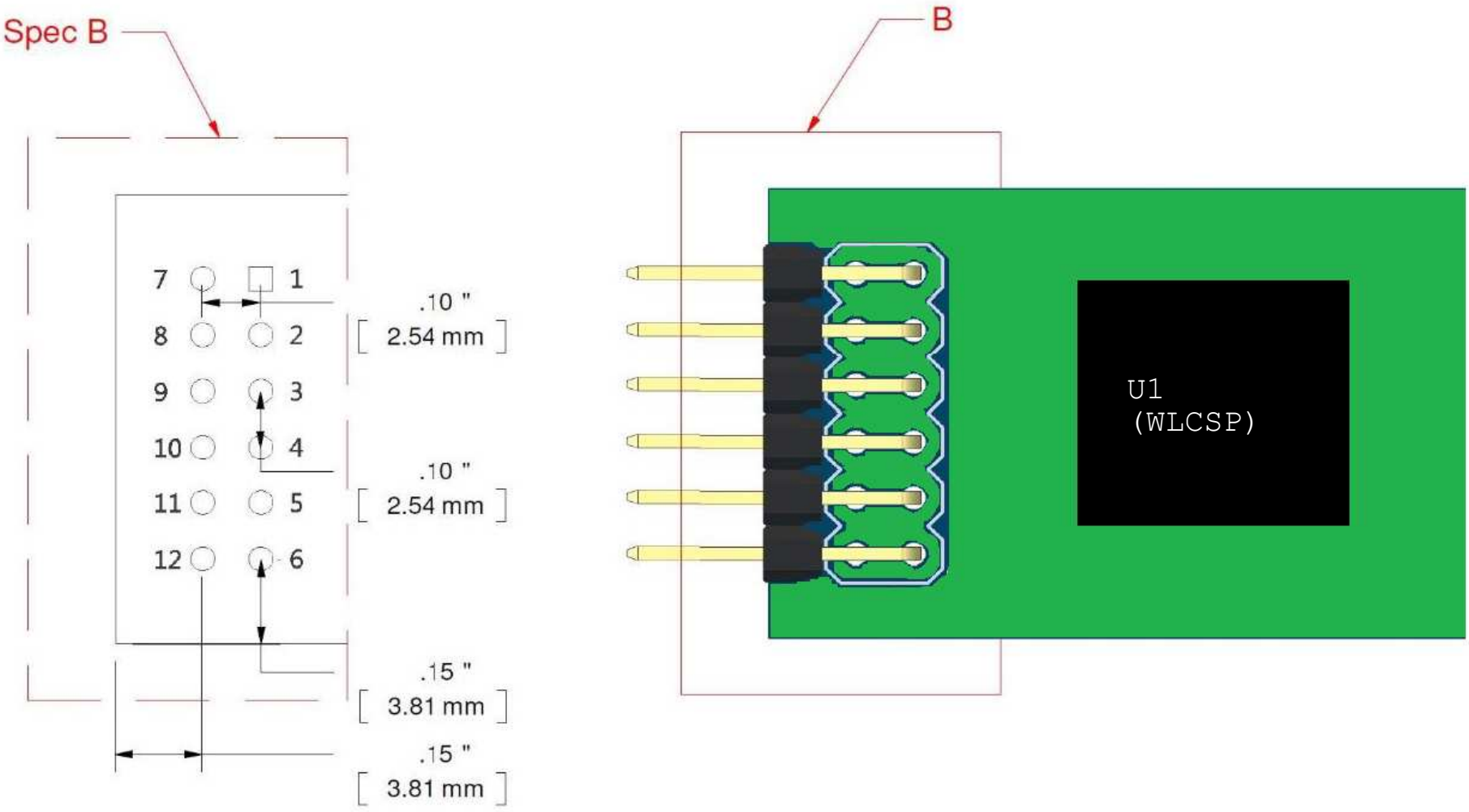

Standard 12-pin male connector placement on Pmod boards.

Legal Disclaimer :
The information given in this document shall in no event be regarded as a guarantee of conditions or characteristics. With respect to any examples or hints given herein, any typical values stated herein and/or any information regarding the application of the device, Infineon Technologies hereby disclaims any and all warranties and liabilities of any kind, including without limitation, warranties of non-infringement of intellectual property rights of any third party.

SCH Title : EVAL-S25FS256T				
Page Title: Revision and Dimension				
Size	Document Number	Drawn By	Approved By	Rev
A4	**630-60636-01**	**SENTHILKUMAR**	**TARE**	**1.0**
Date:	Monday, October 17, 2022	Sheet	**2** of **3**	

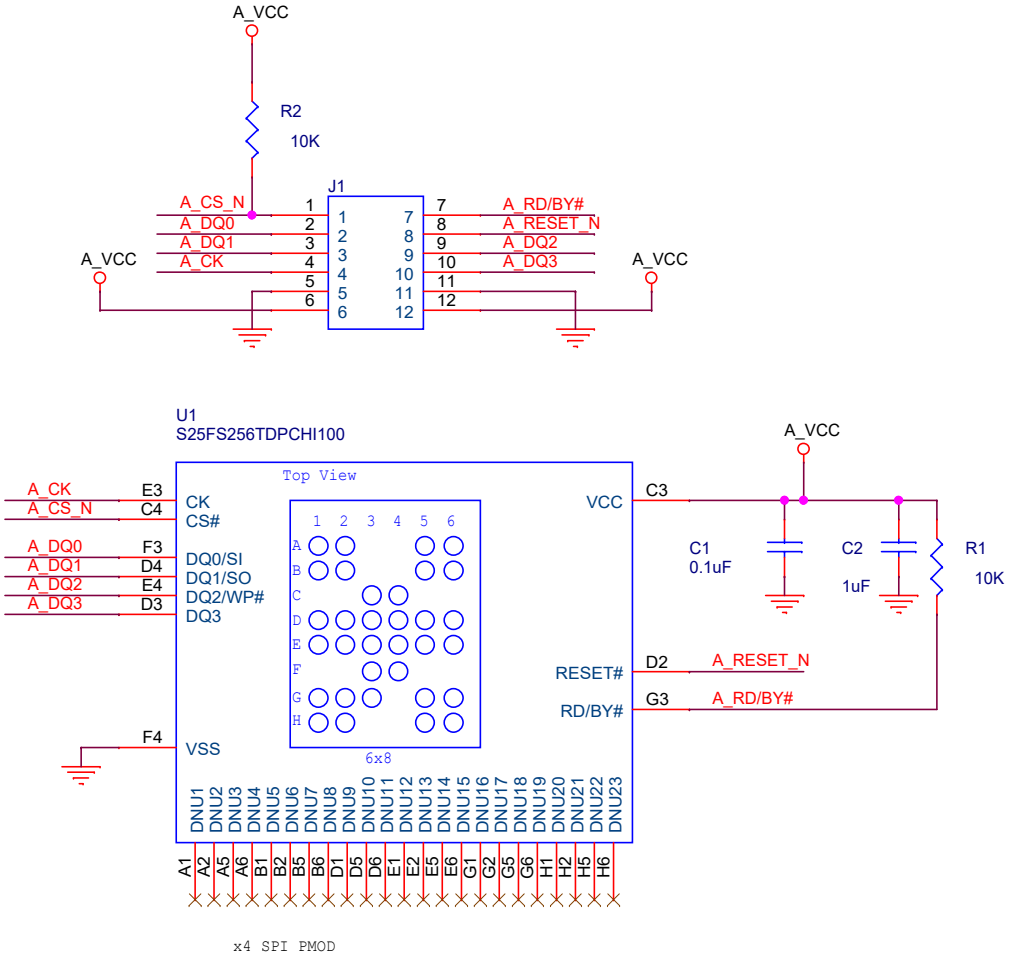

Legal Disclaimer :
The information given in this document shall in no event be regarded as a guarantee of conditions or characteristics. With respect to any examples or hints given herein, any typical values stated herein and/or any information regarding the application of the device, Infineon Technologies hereby disclaims any and all warranties and liabilities of any kind, including without limitation, warranties of non-infringement of intellectual property rights of any third party.

SCH Title : EVAL-S25FS256T

Page Title: Memory and Connectors

Size	Document Number	Drawn By	Approved By	Rev
A4	630-60636-01	SENTHILKUMAR	TARE	1.0

Date: Monday, October 17, 2022 Sheet 3 of 3

REVISION HISTORY

REV	DESCRIPTION OF CHANGE	DATE
01	Initial release	11/11/2021

Legal Disclaimer :
The information given in this document shall in no event be regarded as a guarantee of conditions or characteristics. With respect to any examples or hints given herein, any typical values stated herein and/or any information regarding the application of the device, Infineon Technologies hereby disclaims any and all warranties and liabilities of any kind, including without limitation, warranties of non-infringement of intellectual property rights of any third party.

SCH Title : EVAL-S25FS256T

Page Title: Revision history

Size	Document Number	Drawn By	Approved By	Rev
A4	630-60627-01	SRIRAMAN	TAREESH	01

Date: Monday, October 17, 2022 Sheet 4 of 4