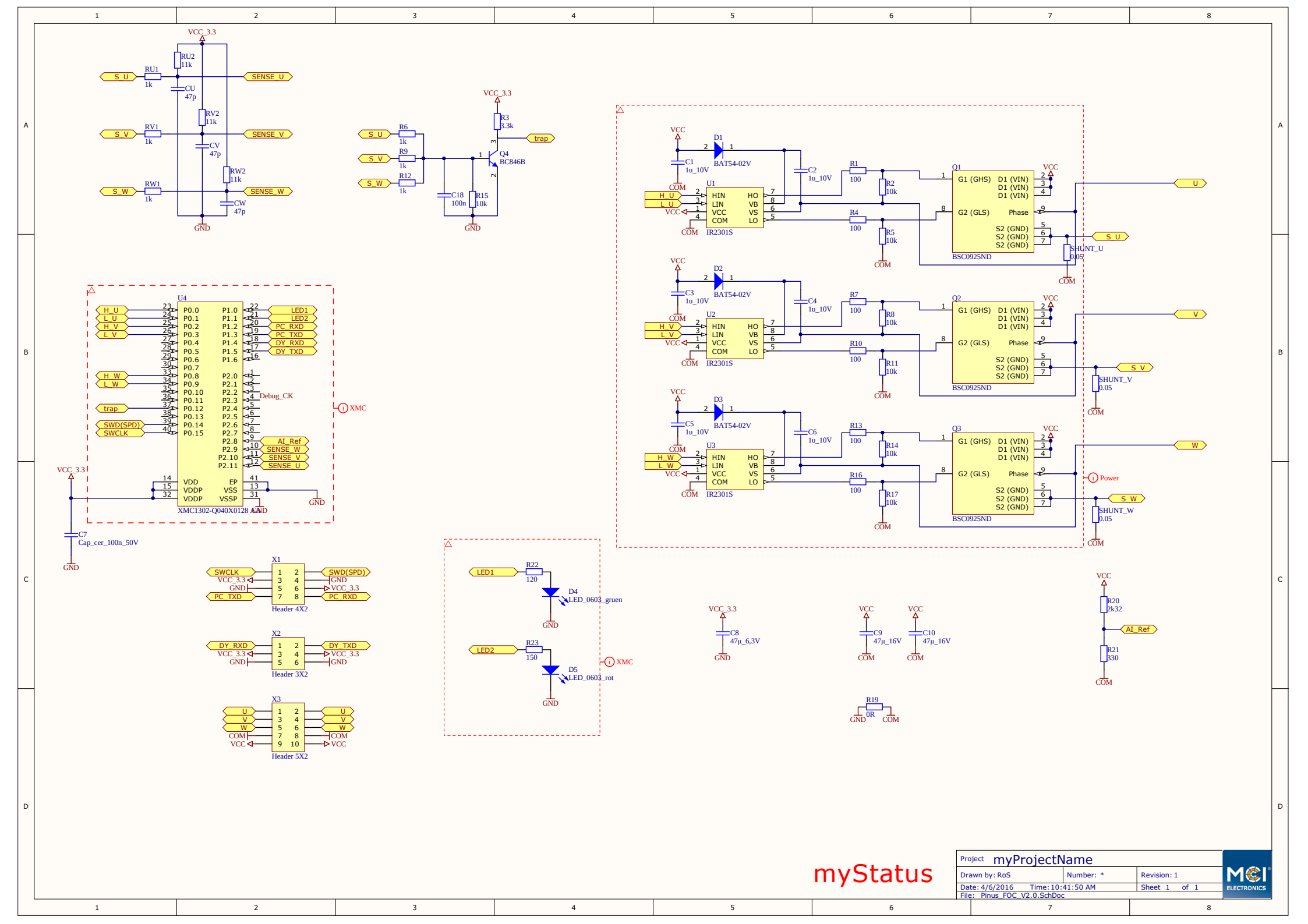
VCC_3.3
RU2 11k
RU1 1k
S_U
SENSE_U
CU 47p
RV2 11k
RV1 1k
S_V
SENSE_V
CV 47p
RW2 11k
RW1 1k
S_W
SENSE_W
CW 47p
GND
R6 1k
R9 1k
R12 1k
R3 3.3k
trap
Q4 BC846B
C18 100n
R15 10k
U4
XMC1302-Q040X0128 AA
H_U
L_U
H_V
L_V
H_W
L_W
SWD(SPD)
SWCLK
Debug_CK
LED1
LED2
PC_RXD
PC_TXD
DY_RXD
DY_TXD
AI_Ref
XMC
C7 Cap_cer_100n_50V
D1 BAT54-02V
U1 IR2301S
Q1 BSC0925ND
U
SHUNT_U 0.05
D2 BAT54-02V
U2 IR2301S
Q2 BSC0925ND
V
S_V
SHUNT_V 0.05
D3 BAT54-02V
U3 IR2301S
Q3 BSC0925ND
W
S_W
SHUNT_W 0.05
Power
X1 Header 4X2
X2 Header 3X2
X3 Header 5X2
LED1
LED2
R22 120
R23 150
D4 LED_0603_gruen
D5 LED_0603_rot
C8 47µ_6,3V
C9 47µ_16V
C10 47µ_16V
R20 2k32
R21 330
AI_Ref
R19 0R
myStatus
Project myProjectName
Drawn by: RoS
Number: *
Revision: 1
Date: 4/6/2016 Time: 10:41:50 AM
Sheet 1 of 1
File: Pinus_FOC_V2.0.SchDoc
MCI ELECTRONICS