CY8C55 FAMILY PROCESSOR MODULE

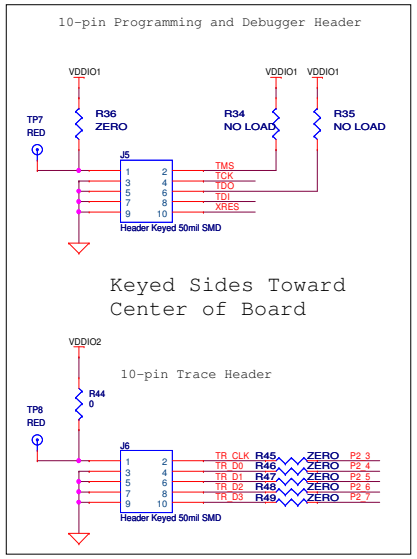

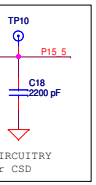

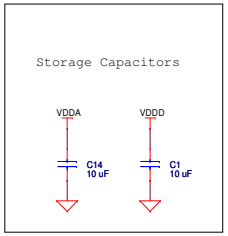

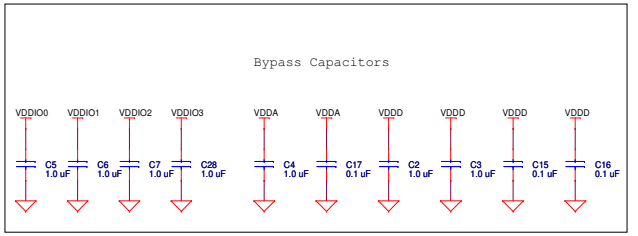

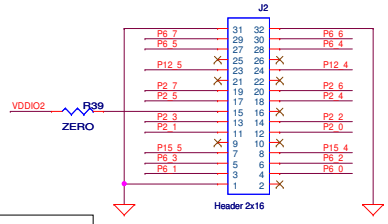

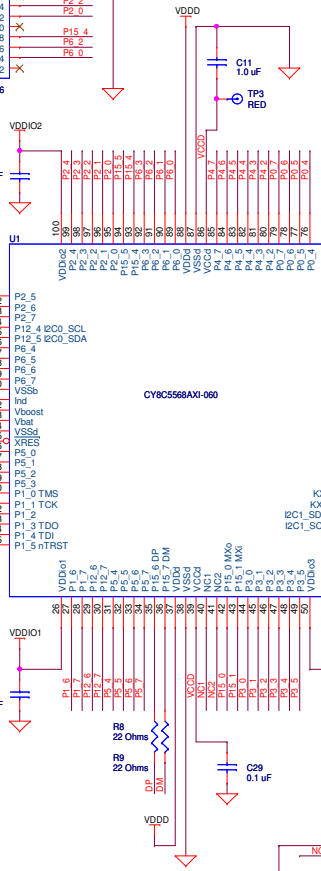

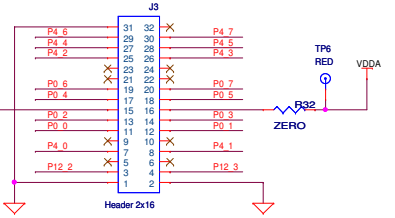

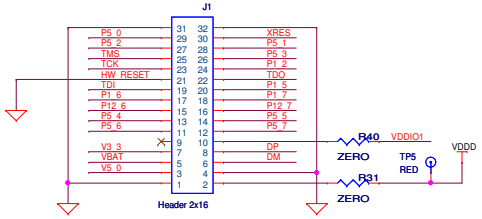

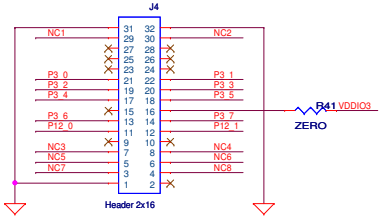

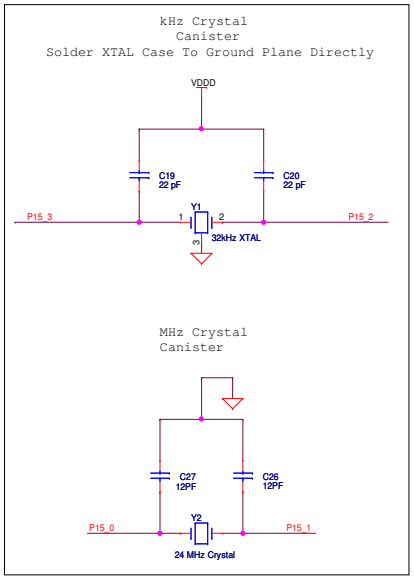

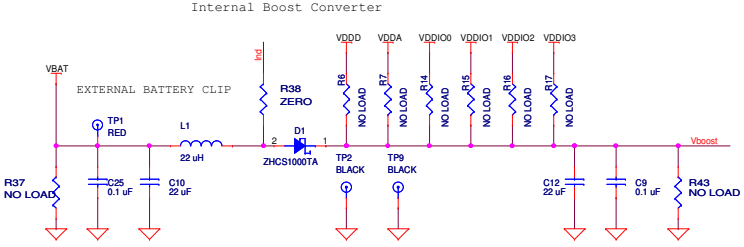

PDCR-9546 REV**
121R-54600 REV*A

Layout Considerations/Requirements:

1. Board Layers: 2
2. Board Thickness: 0.062"
3. Board Size: 2.0" x 2.5"
4. Impedance matching for USB signals

CYPRESS SEMICONDUCTOR © 2011		
Title: CY8C55 Family Processor Module		
Size: C	Document Number: REF-15051	Rev: *A
Date:	Sheet 1 of 1	