Index

Page	Schematics Page Name
01	Cover Sheet / Revision History
02	Top Level
03	Freewheeling
04	Driver
05	Switches
06	Input Stage
07	Miscellaneous

01_Revision_History.SchDoc

Revision History

Rev.	Rel.	Date	Author	Description	Page(s)
1.0	RC01	07/2018	KP	- Initial design	7
1.1	RC01	01/2020	KP	- Formatting of Schematic	7

Battery Switch 12V

12V_Version

1.0

Infineon Technologies AG

ATV SYS SAE HW

Am Campeon 1-15 - 85579 Neubiberg - Germany

07/2018

Link to Top Level Document

02 Top Level
02_Battery_Switch_12V.SchDoc

LEGAL DISCLAIMER
THE INFORMATION GIVEN IN THIS DOCUMENT IS GIVEN FOR ILLUSTRATING PURPOSES ONLY. THE RECIPIENT OF THIS DOCUMENT MUST VERIFY ANY FUNCTION DESCRIBED HEREIN IN THE REAL APPLICATION. INFINEON TECHNOLOGIES HEREBY DISCLAIMS ANY AND ALL WARRANTIES AND LIABILITIES OF ANY KIND (INCLUDING WITHOUT LIMITATION WARRANTIES OF NON-INFRINGEMENT OF INTELLECTUAL PROPERTY RIGHTS OF ANY THIRD PARTY) WITH RESPECT TO ANY AND ALL INFORMATION GIVEN IN THIS DOCUMENT.

Restricted

Infineon Technologies AG
ATV SYS SAE HW
Am Campeon 1-15 - 85579 Neubiberg - Germany

Title	Battery Switch 12V		
Variant	12V_Version	Approved	-
Size: A3	Document Name: 01_Revision_History.SchDoc	Rel. KP	Rev. 1.0
Author: KP			
Date: 23.10.2020 Time: 14:55:07		SVN Revision: Not in version control	

© Infineon Technologies AG 2014. All Rights Reserved.

Sheet of 7

02_Battery_Switch_12V.SchDoc

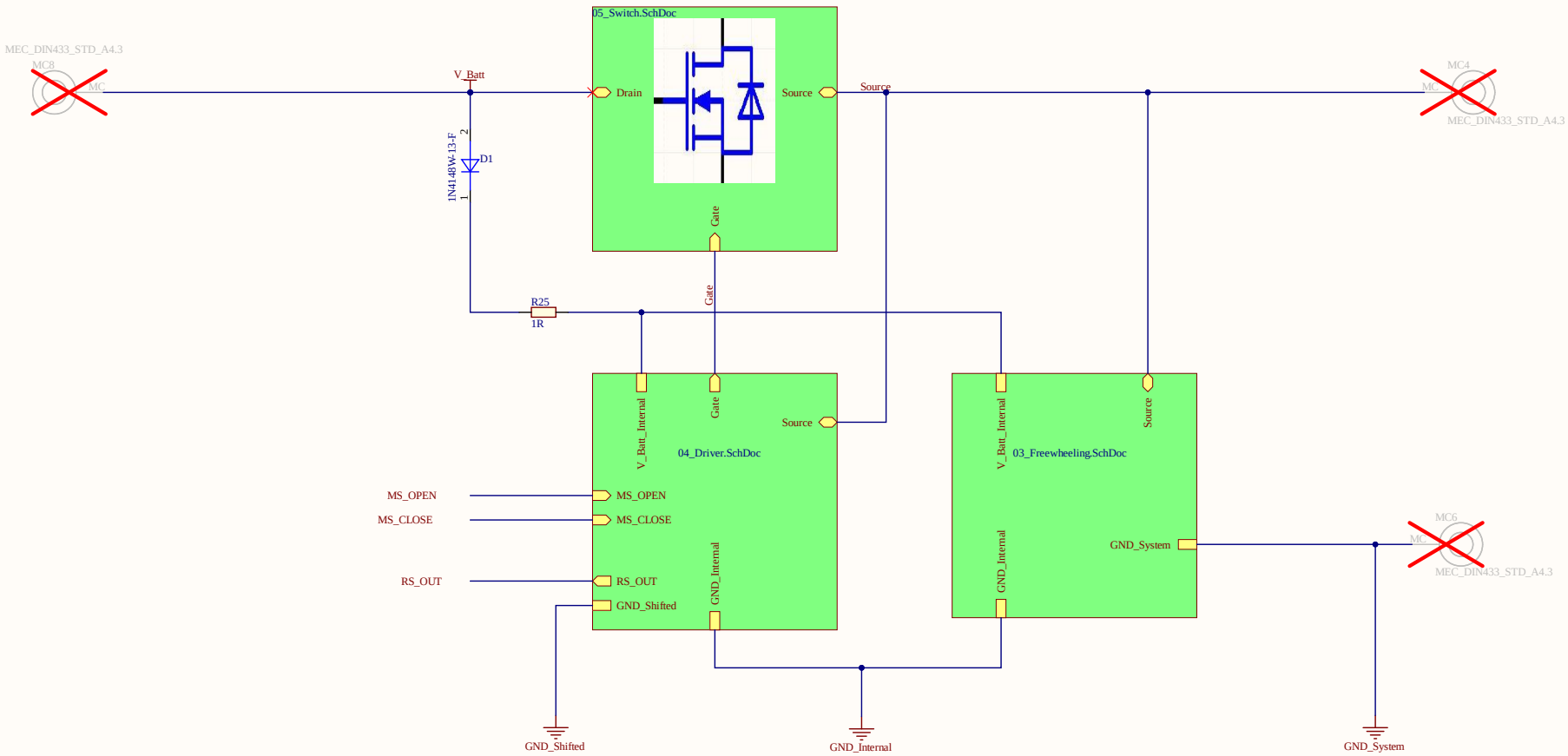

Control & Diagnostics Connector

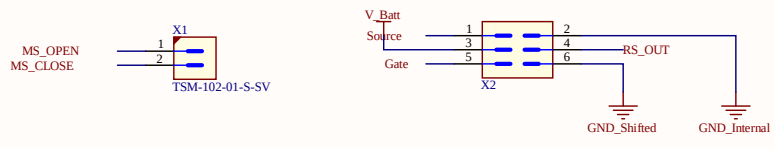

Link to Miscellaneous Document

Miscellaneous
Miscellaneous.SchDoc

Restricted

Infineon Technologies AG ATV SYS SAE HW Am Campeon 1-15 - 85579 Neubiberg - Germany			
Title	Battery Switch 12V		
Variant	12V_Version	Approved	-
Size: A3	Document Name: 02_Battery_Switch_12V.SchDoc	Rel.: KP	Rev.: 1.0
Author: KP			
Date: 23.10.2020 Time: 14:55:07	SVN Revision: Not in version control		
© Infineon Technologies AG 2014. All Rights Reserved.	Sheet of 7		

03_Freewheeling.SchDoc

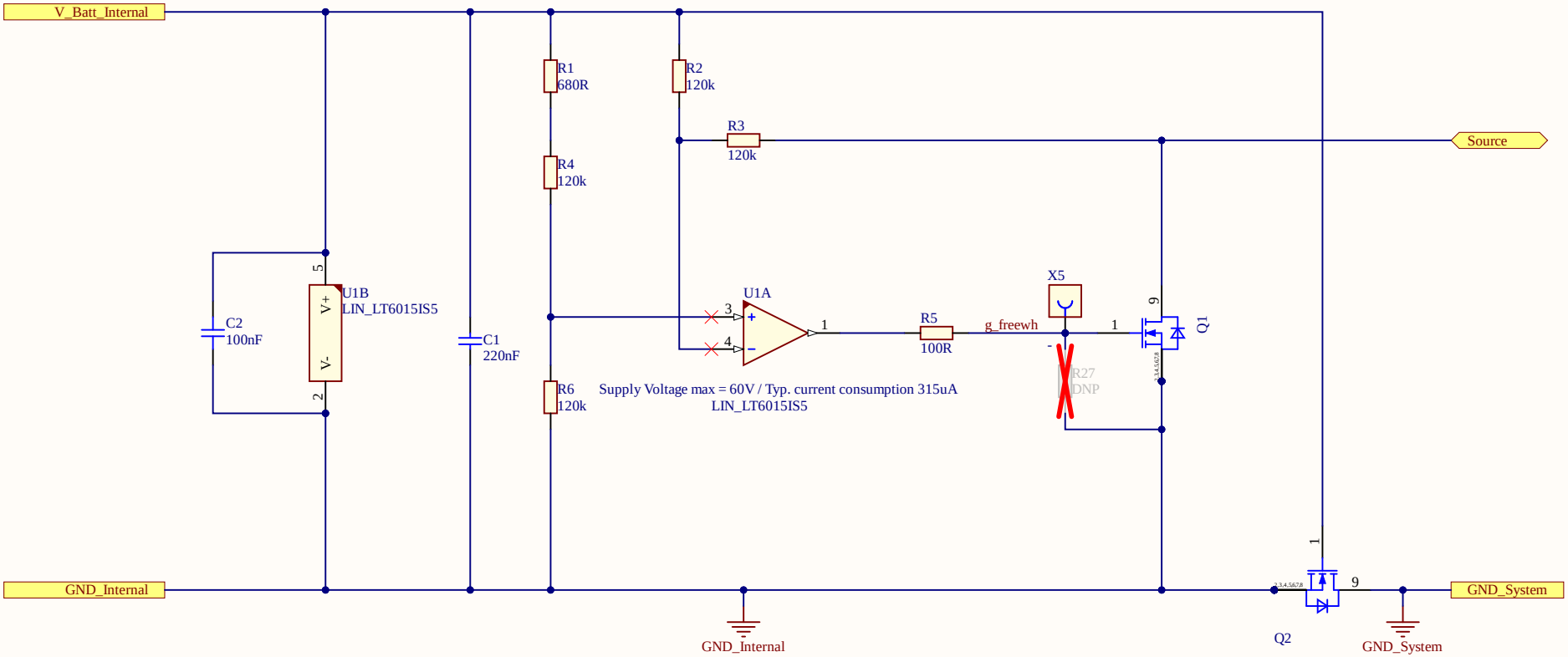

Restricted

Infineon Technologies AG
ATV SYS SAE HW
Am Campeon 1-15 - 85579 Neubiberg - Germany

Title	Battery Switch 12V		
Variant	12V_Version	Approved	-
Size: A4	Document Name: 03_Freewheeling.SchDoc	Rel. KP	Rev. 1.0

Author: KP
Date: 23.10.2020 Time: 14:55:08 SVN Revision: Not in version control
© Infineon Technologies AG 2014. All Rights Reserved.
Sheet of 7

04_Driver.SchDoc

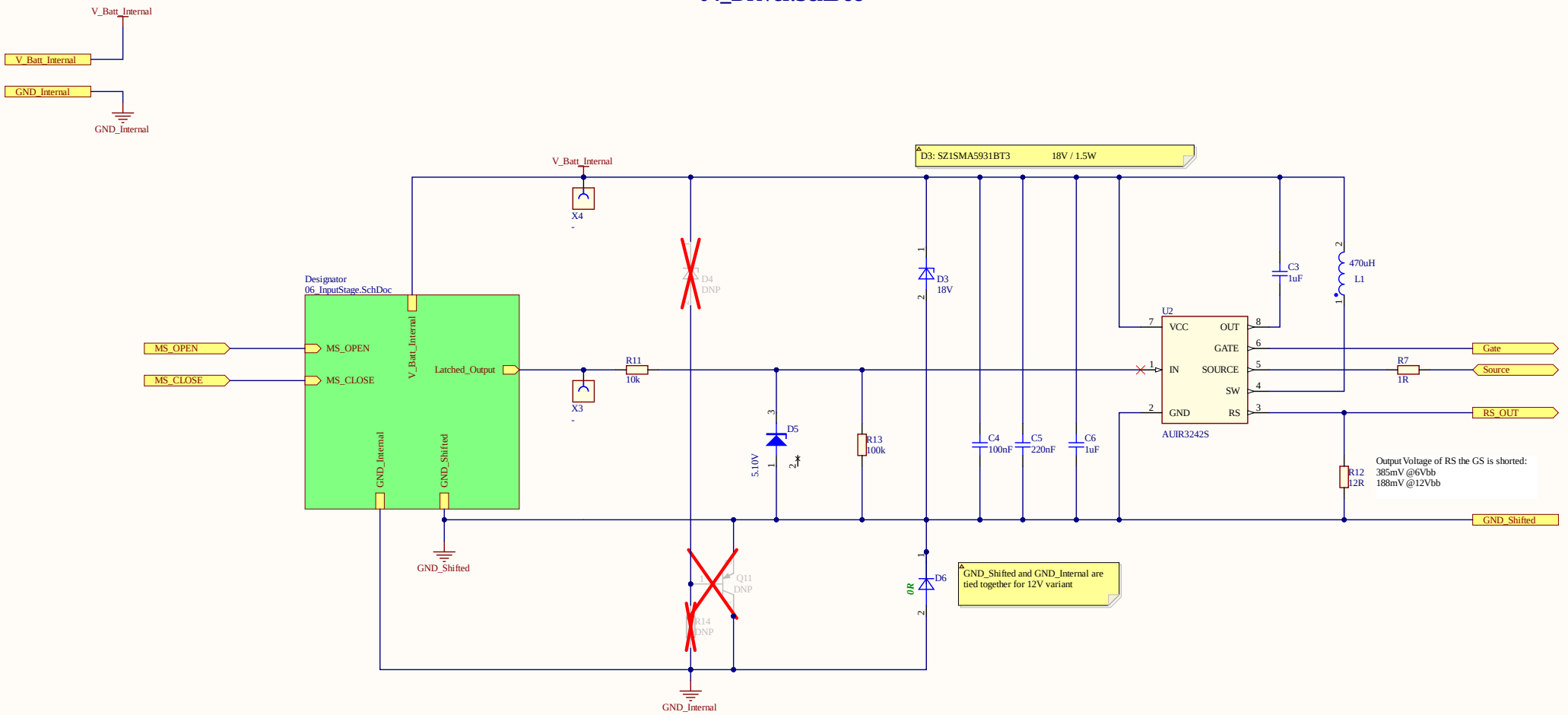

Restricted

Infineon Technologies AG ATV SYS SAE HW Am Campeon 1-15 - 85579 Neubiberg - Germany	
Title: Battery Switch 12V	
Variant: 12V_Version	Approved: -
Size: A3 / Document Name: 04_Driver.SchDoc	Rel.: KP / Rev.: 1.0
Author: KP	
Date: 23.10.2020 Time: 14:55:09	SVN Revision: Not in version control
© Infineon Technologies AG 2014. All Rights Reserved.	Sheet of 7

05_Switch.SchDoc

IPLU300N04S4-R8 OptiMOS-T2 40V 0,77mOhm (8W@250A und 6 Mosfets)

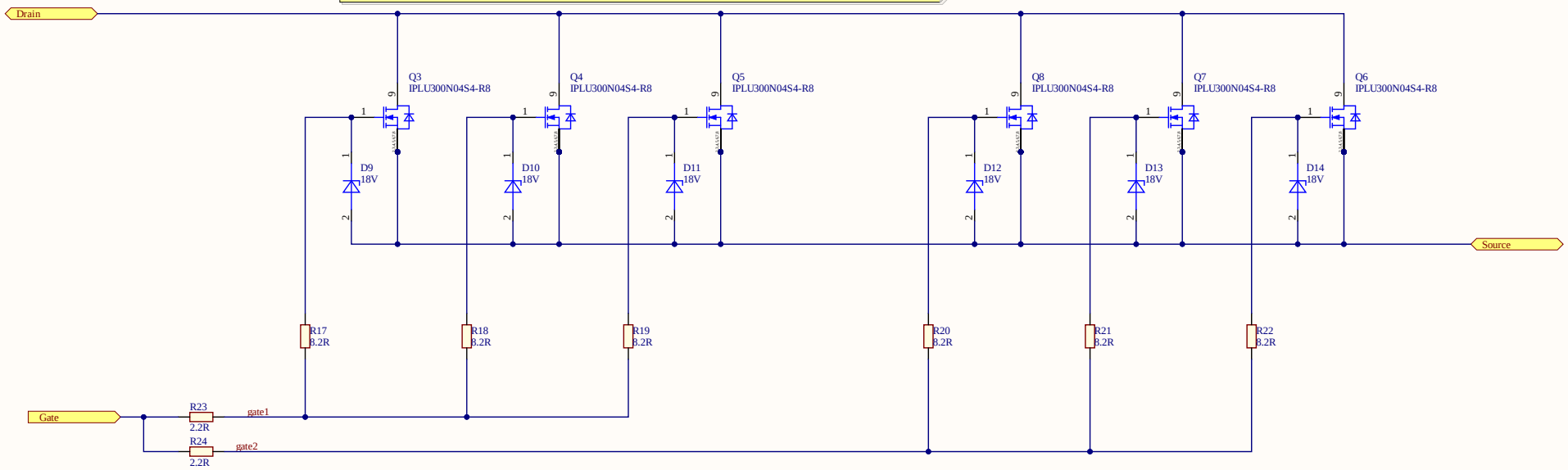

Restricted

Infineon Technologies AG
ATV SYS SAE HW
Am Campeon 1-15 - 85579 Neubiberg - Germany

Title	Battery Switch 12V		
Variant	12V_Version	Approved	-
Size: A3	Document Name: 05_Switch.SchDoc	Rel. KP	Rev. 1.0

Author: KP
Date: 23.10.2020 Time: 14:55:09 SVN Revision: Not in version control
© Infineon Technologies AG 2014. All Rights Reserved.
Sheet of 7

06_InputStage.SchDoc

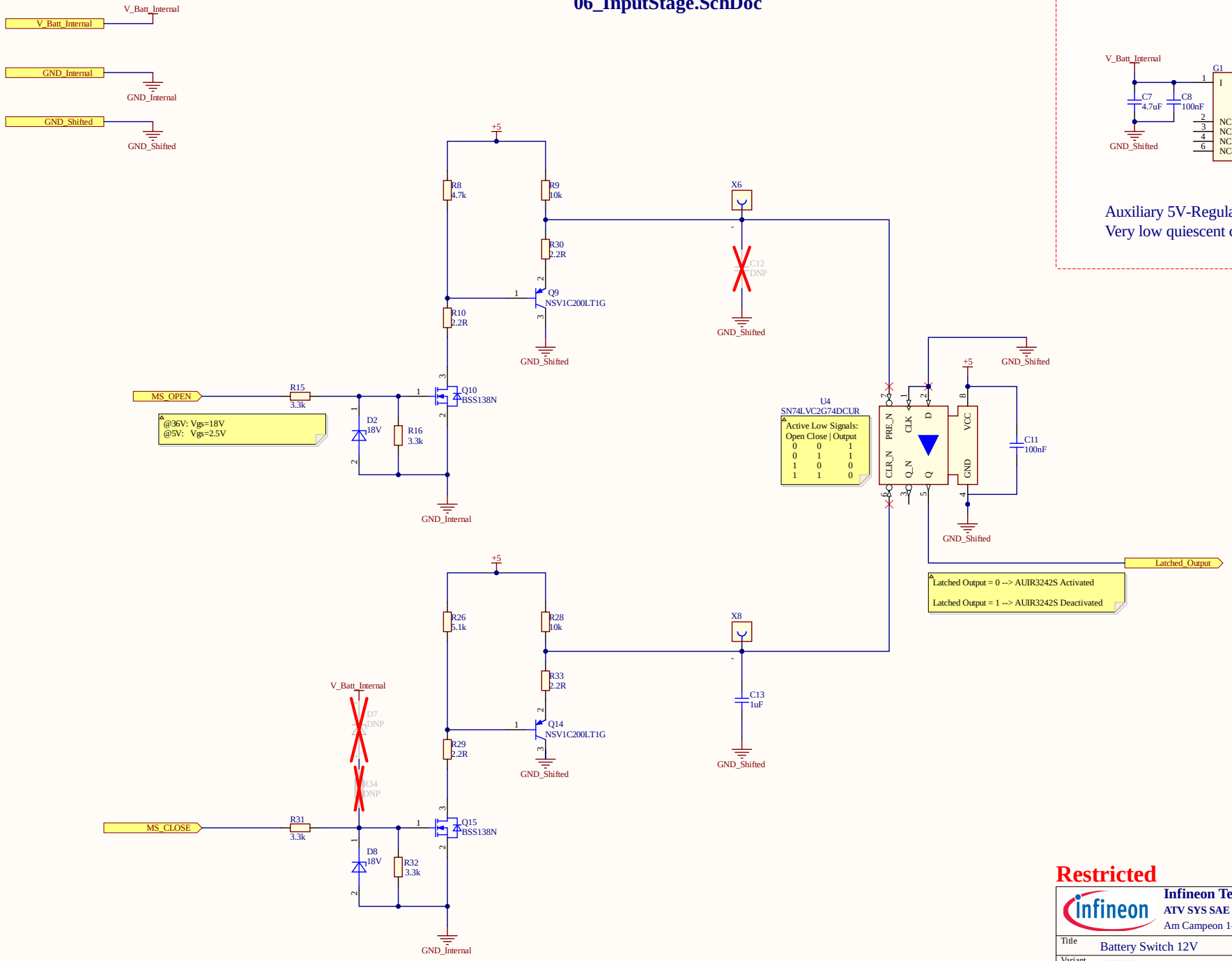

Restricted

Infineon Technologies AG
ATV SYS SAE HW
Am Campeon 1-15 - 85579 Neubiberg - Germany

Title	Battery Switch 12V		
Variant	12V_Version	Approved	-
Size: A3	Document Name: 06_InputStage.SchDoc	Rel. KP	Rev. 1.0
Author: KP			
Date: 23.10.2020	Time: 14:55:09	SVN Revision: Not in version control	

© Infineon Technologies AG 2014. All Rights Reserved.

Sheet of 7

Miscellaneous.SchDoc

Documentation Labels

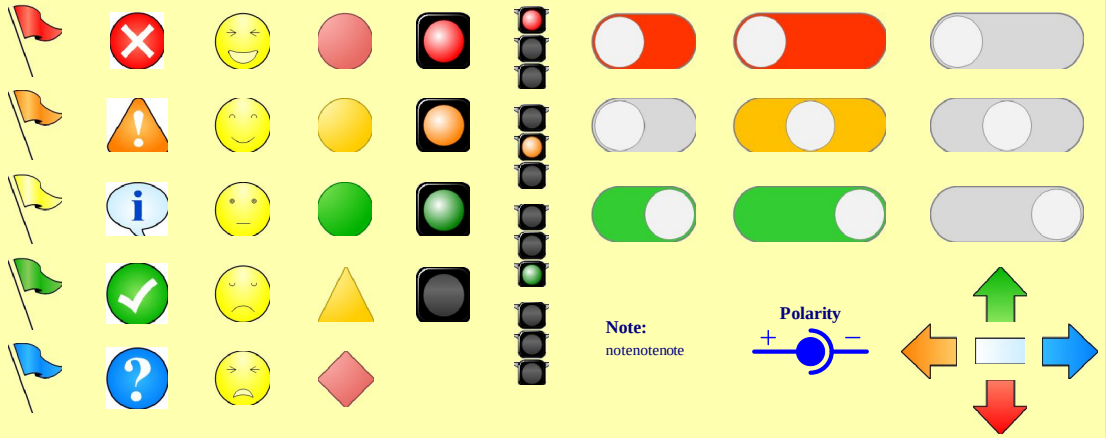

Fiducial Markers

E1_MSC E2_MSC E3_MSC E4_MSC

Fiducial Fiducial Fiducial Fiducial

BOM Report Configuration

Not Used!

Note!
This component is used to define BOM report configuration.
If this component is deleted before other components from database are placed in this project, the BOM report configuration gets lost!

Restricted

Infineon Technologies AG
ATV SYS SAE HW
Am Campeon 1-15 - 85579 Neubiberg - Germany

Title	Battery Switch 12V		
Variant	12V_Version	Approved	-
Size: A3	Document Name: Miscellaneous.SchDoc	Rel. KP	Rev. 1.0

Author: KP
Date: 23.10.2020 Time: 14:55:10 SVN Revision: Not in version control
© Infineon Technologies AG 2014. All Rights Reserved.
Sheet of 7