REVISION HISTORY

From V3.1 to 4.3
NONE
Modified R65 to 10k

From V2.1 to 3.1
Add a USB to LIN transceiver with schematic in the third page.

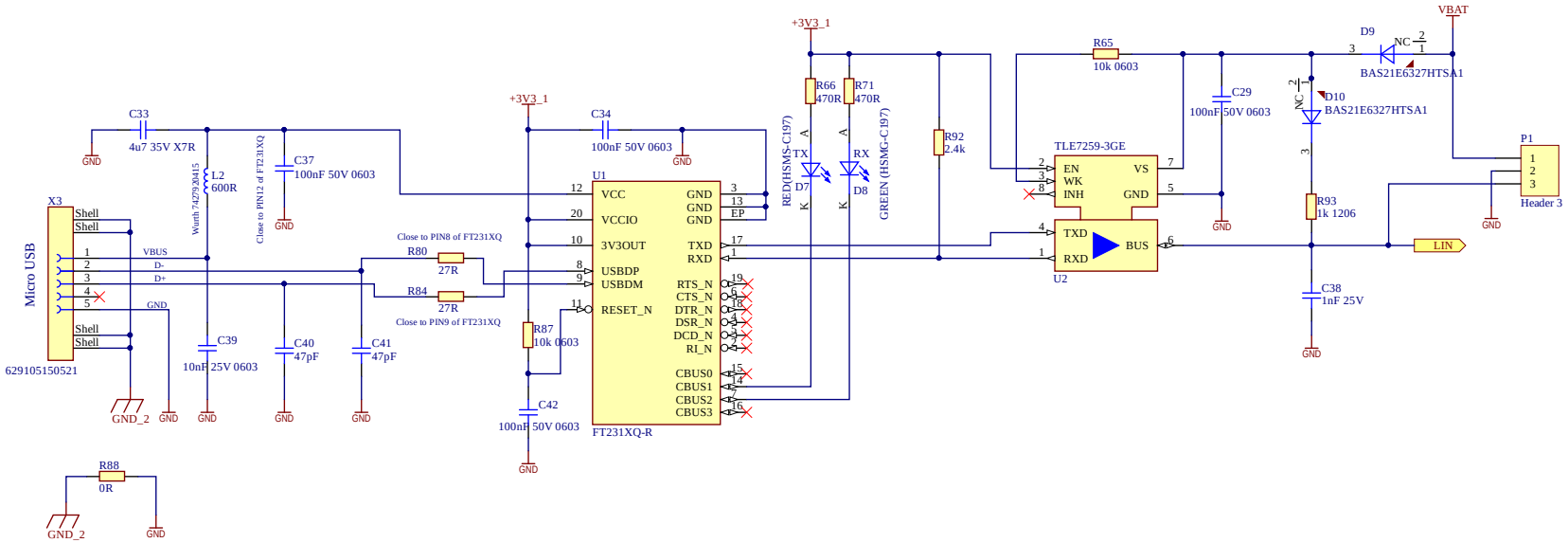

TITLE: TLD5542-1 Multichannel evalBoard	
Document Number:	REV: V4.5
Date: 05/02/2020	Sheet: 3/3

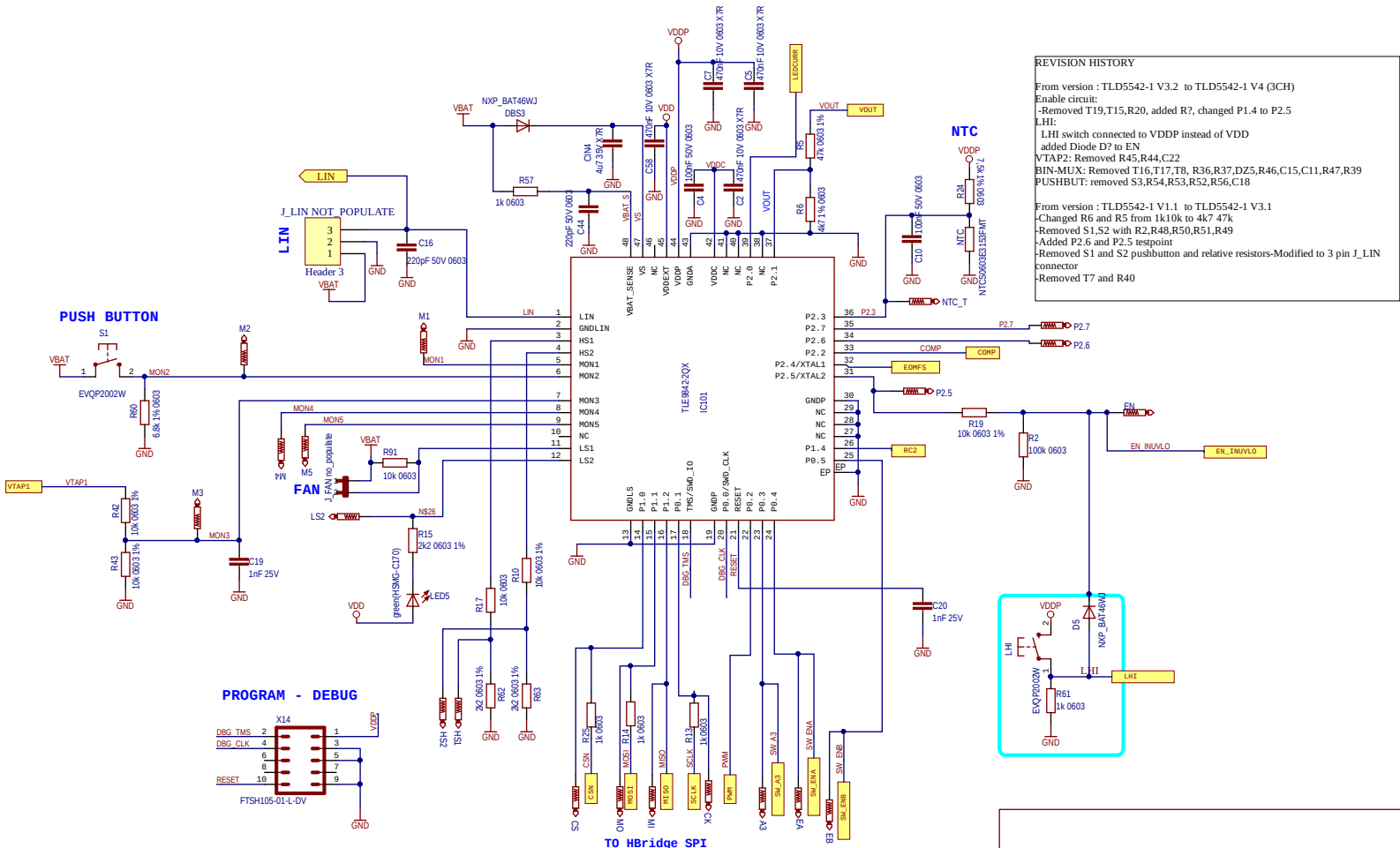
REVISION HISTORY
From version : TLD5542-1 V3.2 to TLD5542-1 V4 (3CH)
Enable circuit:
-Removed T19,T15,R20, added R?, changed P1.4 to P2.5
LHI:
LHI switch connected to VDDP instead of VDD
added Diode D? to EN
VTAP2: Removed R45,R44,C22
BIN-MUX: Removed T16,T17,T8, R36,R37,DZ5,R46,C15,C11,R47,R39
PUSHBUT: removed S3,R54,R53,R52,R56,C18
From version : TLD5542-1 V1.1 to TLD5542-1 V3.1
-Changed R6 and R5 from 1k10k to 4k7 47k
-Removed S1,S2 with R2,R48,R50,R51,R49
-Added P2.6 and P2.5 testpoint
-Removed S1 and S2 pushbutton and relative resistors-Modified to 3 pin J_LIN connector
-Removed T7 and R40
PUSH BUTTON
LIN
FAN
NTC
PROGRAM - DEBUG
TO HBridge SPI
To Floating Switches MOS
TLE9842-2QX
IC101
TITLE: TLD5542-1 Multichannel evalBoard
Document Number:
REV: V4.5
Date: 05/02/2020
Sheet: 2/3

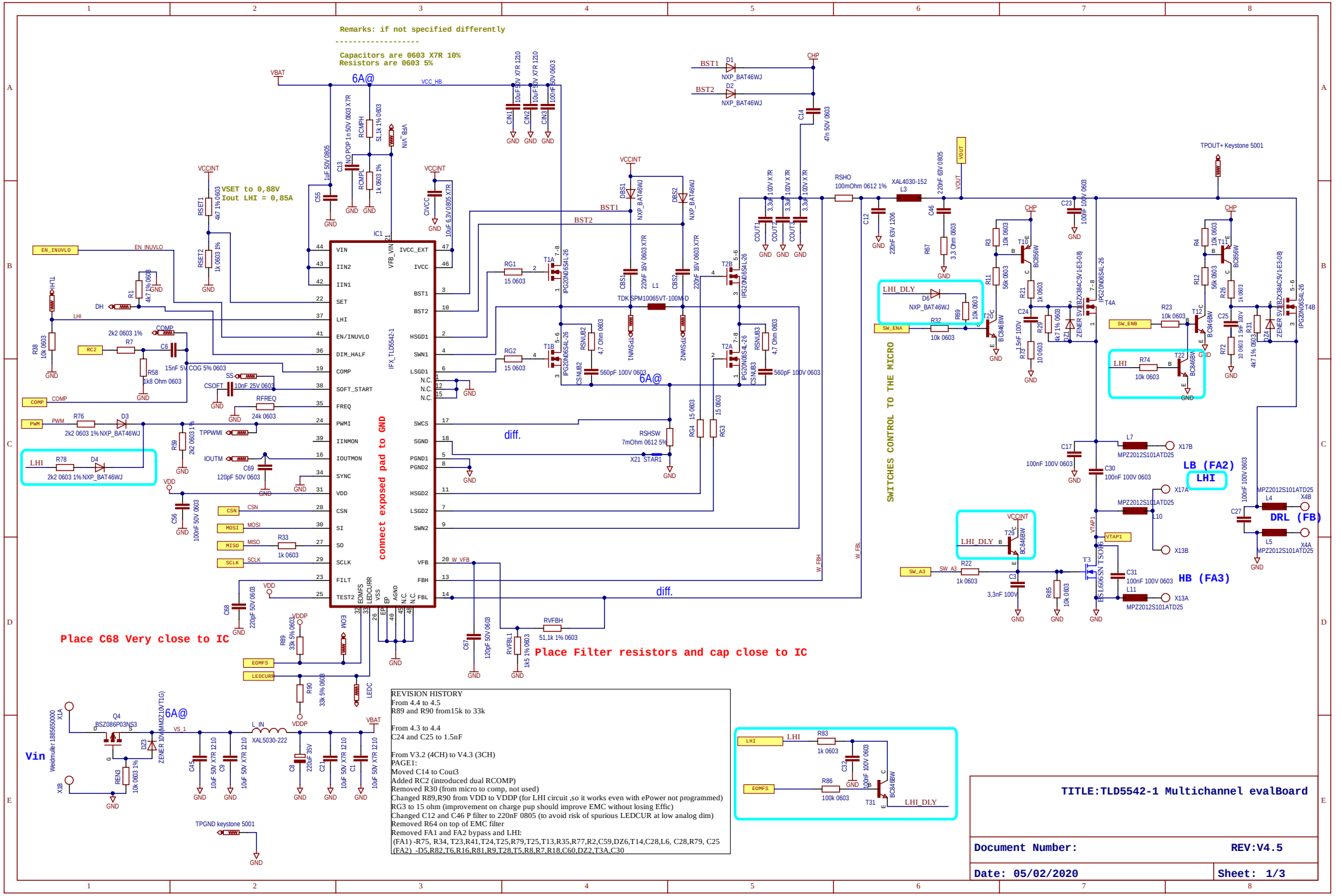
Remarks: if not specified differently
Capacitors are 0603 X7R 10%
Resistors are 0603 5%
VSET to 0,88V
Iout LHI = 0,85A
connect exposed pad to GND
SWITCHES CONTROL TO THE MICRO
Place C68 Very close to IC
Place Filter resistors and cap close to IC
LB (FA2)
LHI
HB (FA3)
DRL (FB)
Vin
TPOUT+ Keystone 5001
TPGND keystone 5001
REVISION HISTORY
From 4.4 to 4.5
R89 and R90 from15k to 33k
From 4.3 to 4.4
C24 and C25 to 1.5nF
From V3.2 (4CH) to V4.3 (3CH)
PAGE1:
Moved C14 to Cout3
Added RC2 (introduced dual RCOMP)
Removed R30 (from micro to comp, not used)
Changed R89,R90 from VDD to VDDP (for LHI circuit ,so it works even with ePower not programmed)
RG3 to 15 ohm (improvement on charge pup should improve EMC without losing Effic)
Changed C12 and C46 P filter to 220nF 0805 (to avoid risk of spurious LEDCUR at low analog dim)
Removed R64 on top of EMC filter
Removed FA1 and FA2 bypass and LHI:
(FA1) -R75, R34, T23,R41,T24,T25,R79,T25,T13,R35,R77,R2,C59,DZ6,T14,C28,L6, C28,R79, C25
(FA2) -D5,R82,T6,R16,R81,R9,T28,T5,R8,R7,R18,C60,DZ2,T3A,C30
TITLE:TLD5542-1 Multichannel evalBoard
Document Number:
REV:V4.5
Date: 05/02/2020
Sheet: 1/3