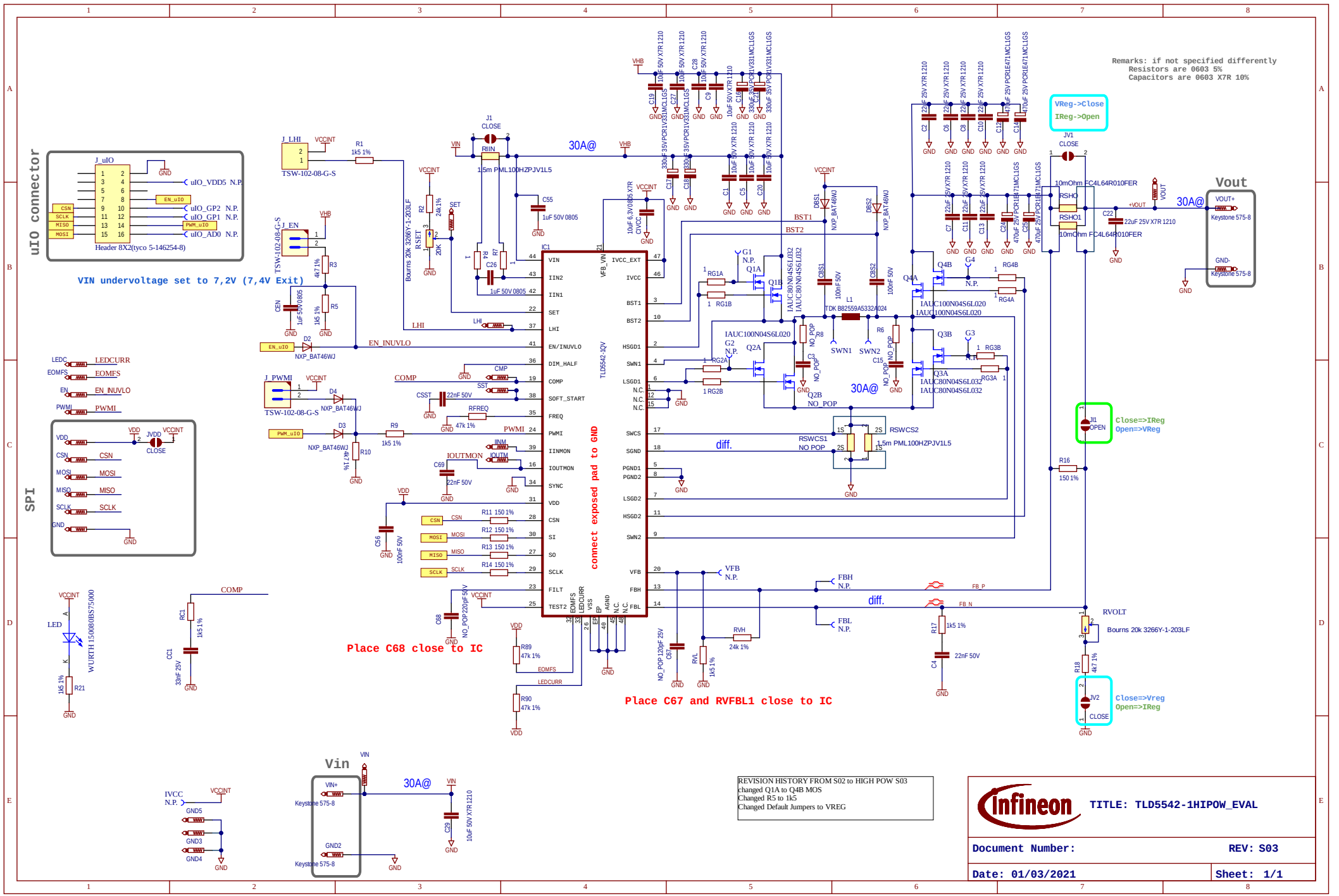

REVISION HISTORY FROM S02 to HIGH POW S03
changed Q1A to Q4B MOS
Changed R5 to 1k5
Changed Default Jumpers to VREG

Infineon

TITLE: TLD5542-1HIPOW_EVAL

Document Number: REV: S03

Date: 01/03/2021 Sheet: 1/1