Please note that Cypress is an Infineon Technologies Company.
The document following this cover page is marked as “Cypress” document as this is the company that originally developed the product. Please note that Infineon will continue to offer the product to new and existing customers as part of the Infineon product portfolio.

Continuity of document content
The fact that Infineon offers the following product as part of the Infineon product portfolio does not lead to any changes to this document. Future revisions will occur when appropriate, and any changes will be set out on the document history page.

Continuity of ordering part numbers
Infineon continues to support existing part numbers. Please continue to use the ordering part numbers listed in the datasheet for ordering.

S6J3350 Series

32-bit Microcontroller TRAVEO™ T1G Family

The TRAVEO™ T1G family expands the company's automotive applications, scalability and high performance into one line-up and at the same time adds new features to fulfill the latest requirements of the automotive industry. Based on the powerful Arm® Cortex®-R5F core in single operations, it offers state-of-the-art real time performance, safety and security features. The family supports the latest in-car networks and offers high performance graphics engines optimized for a minimum memory footprint and embeds dedicated features to increase data security in the car.
S6J3350 is a microcontroller series for body and gateway.

Features

- System
  - 32bit Arm Cortex-R5F CPU core at up to 240 MHz
  - General purpose I/O port: up to 148
  - 12-bit A/D converter: up to 64 channels
  - External interrupt: up to 24 channels
  - Base timer: up to 64 channels
  - 32-bit reload timer: up to 6 channels
  - 32-bit free-run timer: 8 channels
  - Input capture unit: 12 channels
  - Output compare unit: 12 channels
  - Built-in CR oscillator
  - Real-time clock
  - DMA controller: 16 channels
  - JTAG debug interface
- Communication
  - CAN-FD: up to 8 channels
  - Multi-function serial interface: up to 12 channels, selectable protocol: UART, CSIO, LIN and I^2C
  - Ethernet AVB MAC
- Memory
  - HyperBus™ Memory interface
  - DDR High Speed SPI
  - External BUS interface
- Security and Safety
  - Secure Hardware Extension – SHE
  - Safety features, such as MPU, TPU, ECC and others
  - CRC generator: 1 channel
  - Watchdog timer with window function
  - Low voltage detector
  - Clock supervisor for all source clocks

Applications

- Body Control Module (BCM)
- Lighting
- Gateway

Table of Contents

1. Overview 3
1.1 Overview 3
1.2 Document Definition 3
2. Function List 4
2.1 Function List 4
2.2 Optional Function 6
3. Product Description 9
3.1 Overview 9
3.2 Product Description 9
4. Package and Pin Assignment 14
4.1 Pin Assignment 14
4.2 Package Dimensions 17
5. IO Circuit Type 21
5.1 I/O Circuit Type 21
5.2 Note 25
6. Port Description 26
6.1 Port Description List 26
6.2 Remark 44
7. Port Configuration 45
7.1 Resource Input Configuration Module 45
7.2 Port Output Function Configuration 135
8. Precautions and Handling Devices 146
8.1 Handling Precautions 146
8.2 Handling Devices 149
9. Electric Characteristics 151
9.1 Electrical Characteristics 151
10. Acronyms 243
11. Ordering Information 244
12. Errata 245
13. Appendix 249
13.1 Application 1: JTAG Tool Connection 249
14. Major Changes 250
Document History 307
Sales, Solutions, and Legal Information 309

1. Overview

1.1 Overview

S6J3350 is a microcontroller series which is to be applied to automotive systems representative of body and gateway.

1.2 Document Definition

The related documents of S6J3350 are as follows:

Table 1-1: Document Definition

Document Type	Definition	Primary User	Document Code
S6J3350 Datasheet	This document. The function and its characteristics are specified quantitatively.	Investigator and Hardware Engineer	002-10634
S6J3300 Hardware Manual	S6J3300 Series 32-bit Microcontroller TRAVEO™ T1G Family Hardware Manual The function and its operation of S6J3300 series are described.	Software Engineer	002-10185
TRAVEO™ T1G Platform Hardware Manual	32-Bit Microcontroller TRAVEO™ T1G Family S6J33xx, S6J34xx, S6J35xx Series Hardware Manual Platform Part The function and its operation of CPU core platform are described.	Software Engineer	002-07884
Application Note	The reference software, sample application, the reference board design, and so on are explained.	Software and Hardware Engineer	002-04455 002-04446 002-09716 002-04452 002-04096 002-12061 002-02495

Notes:

- *Refer all documents for the system development.*
- *"Primary user" is a most likely an engineer for whom the document is the most useful.*
- *The description of the datasheet and the S6J3300 Hardware Manual should precede the duplicated description of TRAVEO™ T1G Platform Hardware Manual.*
- *TRAVEO™ T1G Platform Hardware Manual is expected to be used as dictionary of platform specification.*

2. Function List

2.1 Function List

This table shows the functions which are implemented in S6J3350 series.

Table 2-1: Function List

Function	Description	Remarks
CPU core	Arm Cortex R5F	
FPU	Available	
PPU	Available	
MPU	Available	
TPU	Available	
Endian	Little endian	
Core clock frequency	240 MHz	
HPM bus frequency	200 MHz	
LLPM bus frequency	240 MHz	
Resource clock frequency	80 MHz (Max)	
Embedded CR oscillation	Slow clock:100 kHz, Fast clock: 4 MHz (Center frequency)	See 9.1.4.1
PLL	PLL0, 1, 2, 3	
SSCG PLL	SSCG0, 1, 2, 3	
Clock supervisor	Available	
DMA	16 ch	
Boot-ROM	16 Kbyte	
JTAG	Available	
Data cache	16 Kbyte	
Instruction cache	16 Kbyte	
Program FLASH	Option	See 2.2.1
Work FLASH	112 Kbyte	
TCRAM	128 Kbyte	
System SRAM	384 Kbyte	
Backup RAM	32 Kbyte	
Security (SHE)	Option	
Low latency interrupt	Available	
Power domain	5 domains	
External power supply	5 V(VCC5, VCC53), 3 V(VCC3, VCC53), 1.2 V(VCC12)	
Embedded LDO power supply for 5.0V	Available	
Low voltage detection of external power supply	Available	
Low voltage detection of internal LDO output	Available	
Hardware watchdog timer	Available	
Software watchdog timer	Available	
Package	Option	See 2.2.1
AUTOSAR	AUTOSAR 4.0.3	
General Purpose I/O	Option	See 2.2.3
Up/down counter	2 ch	
I/O timer	(FRT 5 ch x ICU 6 ch x OCU 6 ch) + (FRT 3 ch x ICU 6 ch x OCU 6 ch)	
32bit Reload timer	6 ch	
Real time clock	Available	Automatic calibration
Base timer	32 units (64 ch)	
12bit-A/D converter	2 unit - 64 input ports (Max)	See 2.2.3
CRC	4 units	
Programmable CRC	1 unit	

Function	Description	Remarks
Source clock timer	4 ch	
NMI	Available	
External interrupt	24 ch	
Internal interrupt	512 vectors	
DDR HSSPI	1 ch	A type of Quad SPI
Hyper BUS	1 ch	See the AC specification on 9.1.4.16
Multi-function serial interface	12 ch	
CAN-FD	8 ch	
CAN-FD RAM (ECC supported)	16 KB/ch It equivalents to 128 message buffer per channel of MCAN module	
Ethernet AVB	1 unit	See 2.2.1
External BUS	1 ch	

Notes:

- *The options are described in 2.2 Optional Function.*

2.2 Optional Function

2.2.1 Basic Option

This figure shows the optional function and the part number relations of the series.

Figure 2-1: Option and Part Number for S6J3350 Series

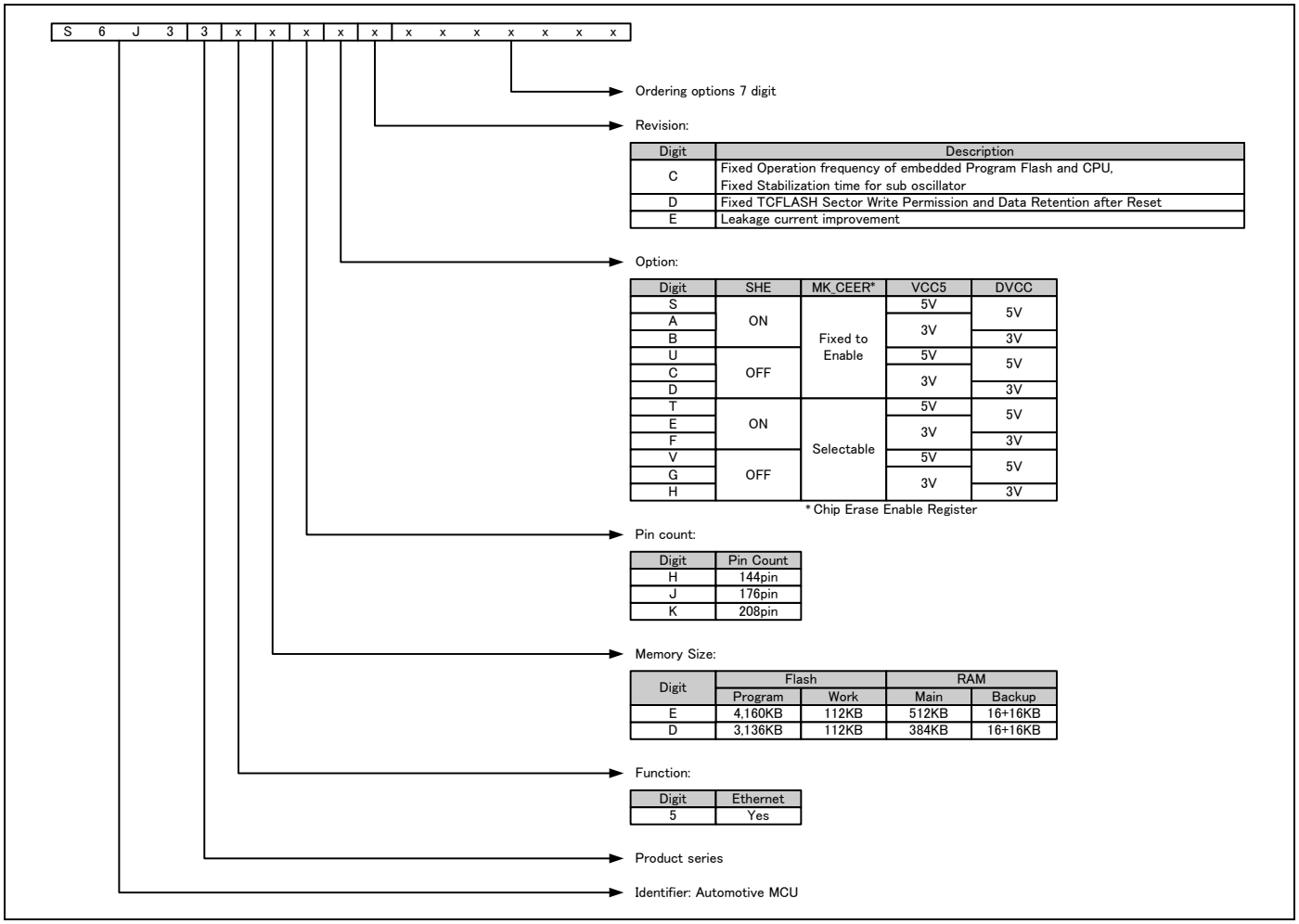

Digit	Description
C	Fixed Operation frequency of embedded Program Flash and CPU, Fixed Stabilization time for sub oscillator
D	Fixed TCFLASH Sector Write Permission and Data Retention after Reset
E	Leakage current improvement

Digit	SHE	MK_CEER*	VCC5	DVCC
S	ON	Fixed to Enable	5V	5V
A			3V	3V
B				
U	OFF		5V	5V
C			3V	3V
D				
T	ON	Selectable	5V	5V
E			3V	3V
F				
V	OFF		5V	5V
G			3V	3V
H				

*Chip Erase Enable Register

Digit	Pin Count
H	144pin
J	176pin
K	208pin

Digit	Flash		RAM	
	Program	Work	Main	Backup
E	4,160KB	112KB	512KB	16+16KB
D	3,136KB	112KB	384KB	16+16KB

Digit	Ethernet
5	Yes

Notes:

- *This table only shows the relations between the optional function and the part numbers. That is, all products are not necessarily available for orders. See 11 Ordering Information, and confirm actual availabilities of products.*
- *The main RAM size is configured as follows according to Digit.*

  E: TCRAM 128KB + System-RAM 384KB

  D: TCRAM 128KB + System-RAM 256KB

2.2.2 ID

ID is specified for each function digit and revision which is defined at Figure 2-1.

Function Digit	Revision	Chip ID	JTAG ID
S,U,T,V	C	0x10122100	0x1000B5CF
	D, E	0x10122200	
A,C,E,G	C	0x10128100	
	D, E	0x10128200	
B,D,F,H	C	0x10120100	
	D, E	0x10120200	

2.2.3 Restriction

Some functions have restrictions which depend on package pin counts.

Table 2-2: Pin Restriction

Function	TEQFP176	TEQFP144
Analog input port (12bit-ADC)	AN0~3, AN19~20, AN22~23, AN27, AN33~38, AN48	AN0~7, AN10~11, AN14~15, AN19~20, AN22~23, AN25~30, AN33~38, AN48
General Purpose I/O	P4_00 ~ P4_31	P4_00 ~ P4_31 P3_00 ~ P3_31
CAN	RX0_2, TX0_2 RX3_2, TX3_2 RX4_0, TX4_0 RX7_0, TX7_0 RX7_1, TX7_1	RX0_1, TX0_1 RX0_2, TX0_2 RX1_1, TX1_1 RX2_1, TX2_1 RX3_1, TX3_1 RX3_2, TX3_2 RX4_0, TX4_0 RX5_1, TX5_1 RX6_1, TX6_1 RX7_0, TX7_0 RX7_1, TX7_1
BaseTimer	PPG16/17/18/19_TOUT0_0 PPG16/17/18/19_TOUT2_0 PPG20/21/22/23_TOUT0_0 PPG20/21/22/23_TOUT2_0 PPG24/25/26/27_TOUT0_0 PPG24/25/26/27_TOUT2_0 PPG28/29/30/31_TOUT0_0 PPG28/29/30/31_TOUT2_0 PPG16/17/18/19/20/21_TIN1_0 PPG22/23/24/25/26/27_TIN1_0 PPG28/29/30/31_TIN1_0	PPG16/17/18/19_TOUT0_0 PPG16/17/18/19_TOUT2_0 PPG20/21/22/23_TOUT0_0 PPG20/21/22/23_TOUT2_0 PPG24/25/26/27_TOUT0_0 PPG24/25/26/27_TOUT2_0 PPG28/29/30/31_TOUT0_0 PPG28/29/30/31_TOUT2_0 PPG16/17/18/19/20/21_TIN1_0 PPG22/23/24/25/26/27_TIN1_0 PPG28/29/30/31_TIN1_0 PPG4/5/6/7/8/9_TOUT0_1 PPG4/5/6/7/8/9_TOUT2_1 PPG10/11/12/13/15_TOUT0_1 PPG10/11/12/13/14/15_TOUT2_1 PPG0/1/2/3/4/5_TIN1_1 PPG6/7/8/9/10/11_TIN1_1 PPG12/13/14/15_TIN1_1
ExtBus	-	MDQM1 MAD15~21 MDATA8~15

Function	TEQFP176	TEQFP144
External Interrupt	EINT1_4, EINT1_5 EINT2_1, EINT2_2 EINT3_2, EINT4_2 EINT5_4, EINT5_5 EINT6_4, EINT7_1 EINT7_4, EINT8_4 EINT8_5, EINT9_1 EINT10_1, EINT10_4 EINT10_5, EINT13_2 EINT13_3, EINT14_2 EINT14_3, EINT15_3 EINT16_1, EINT16_3 EINT16_4, EINT19_4 EINT20_3, EINT21_3 EINT22_1, EINT22_3 EINT23_3, EINT23_4	EINT0_4, EINT1_1 EINT1_4, EINT1_5 EINT2_1, EINT2_2 EINT2_4, EINT3_1 EINT3_2, EINT3_4 EINT4_2, EINT4_4 EINT5_4, EINT5_5 EINT6_1, EINT6_4 EINT7_1, EINT7_4 EINT8_1, EINT8_4 EINT8_5, EINT9_1 EINT9_2, EINT10_1 EINT10_2, EINT10_4 EINT10_5, EINT11_2 EINT11_5, EINT12_1 EINT12_2, EINT12_5 EINT13_2, EINT13_3 EINT13_5, EINT14_1 EINT14_2, EINT14_3 EINT14_5, EINT15_2 EINT15_3, EINT16_1 EINT16_2, EINT16_3 EINT16_4, EINT16_5 EINT17_1, EINT17_3 EINT17_5, EINT18_1 EINT18_3, EINT18_5 EINT19_1, EINT19_3 EINT19_4, EINT20_1 EINT20_2, EINT20_3 EINT21_1, EINT21_3 EINT22_1, EINT22_3 EINT23_3, EINT23_4

Notes:

- *See multiplexed functions on pin assignment sheet.*
- *The optional restriction will be added without notification.*

3. Product Description

3.1 Overview

This chapter explains the product features of S6J3350 series. The description of this chapter should precede the duplicated description on TRAVEO™ T1G Platform Hardware Manual.

3.2 Product Description

The table shows features.

Table 3-1: Product Features

Feature	Description
Technology	40 nm CMOS technology with embedded FLASH Fully automotive qualified according to ISO/TS 16949 and AEC-Q100 Developed according to ISO26262, safety target ASIL-B
Functional Safety	The product series has some functional safety features suited for ASIL-B application.
Peripherals	See function list.
Power Domain (PD)	See the TRAVEO™ T1G Platform Hardware Manual and chapter STATE TRANSITION in detail. The product series supports the power off control of PD1, PD2 (including PD3 and 5), PD4_0, PD4_1 and PD6. The power domain resets of PD3 and PD5 included in PD2 are not supported in the product series, and "0" is always read from the reset factor flags of them. This series doesn't support partial wakeup for PD6.
Debug and Trace	See the TRAVEO™ T1G Platform Hardware Manual in detail. - Standard 5-pin JTAG interface - 4 kB Embedded Trace Buffer 4-bit trace support for TEQFP package.
System Control	See the TRAVEO™ T1G Platform Hardware Manual in detail. Main and sub oscillator is available. - A wide range of 3.6 – 16 MHz is available for main oscillator - 32 KHz is available for sub oscillator Sub clock is enable/disable by register settings
Clock	See the TRAVEO™ T1G Platform Hardware Manual in detail. CLK_CLKO (Clock Output Function) is supported. Main Oscillation Stabilization Wait Time (at 4 MHz):8.19ms (Initial value)
Embedded CR oscillation	See the TRAVEO™ T1G Platform Hardware Manual in detail. Stabilization time is as followings. − 30 us or more for 4 MHz (Fast clock) − 30 us or more for 100 kHz (Slow clock)
Clock Supervisor	See the TRAVEO™ T1G Platform Hardware Manual in detail. This product series doesn’t support clock supervisor output port. (Related register and internal circuit is implemented.)
Reset	RSTX pin + MD pin simultaneous assert INITX (Same as INITX pin input) - Occurrence factor: Simultaneously inputting “L” level to RSTX pin and inputting “L” level to MD pin - Release factor: Inputting “H” level to RSTX pin See the TRAVEO™ T1G Platform Hardware Manual in detail. Following resets are not mounted on this device. - SRSTX (and nSRST pin) The product series does not support EX5VRST and writing EX5VRSTCNT bits in SYSC0_SPECFGR has no effect.

Feature	Description
Hardware watchdog	See the TRAVEO™ T1G Platform Hardware Manual in detail. Hardware watchdog function stops during PSS mode. In the related register of HWDG_CFG, the bit ALLOWSTOPCLK is always read as 1 (HWDG_CFG.ALLOWSTOPCLK=1). The product series doesn't support Watchdog Counter Monitor Output port. (Related register and internal circuit is implemented.)
Standby mode	See the TRAVEO™ T1G Platform Hardware Manual in detail. Standby mode with 5 V (or 3 V) single external power supply is available. Turning off the 1.2 V external power supply in standby mode is available. The long term pulse of the indicator PWM can be outputted during RTC Standby mode.
PLL / SSCG PLL	See the TRAVEO™ T1G Platform Hardware Manual in detail. Use case assumption is following. PLL - Peripherals - Trace clock SSCG - CPU core - Hyper BUS - DDR-HSSPI Product supports down spread and center spread modes with the conditions defined in 9.1.4.3 "Internal Clock Timing". Stabilization time is as follows. − 100 us for PLL − 200 us for SSCG
External Interrupts	See the TRAVEO™ T1G Platform Hardware Manual in detail.
NMI	See the TRAVEO™ T1G Platform Hardware Manual in detail. 1 NMI pin.
Memory Protection	MPU16 AHB: See the TRAVEO™ T1G Platform Hardware Manual in detail. MPU for AXI: ch.0 MPU for AHB: ch.1 Additional MPU for Ethernet AVB. They are described on the chapter of MPU for AHB and MPU for AXI To configure Lock or Unlock for both MPUXn_UNLOCK and MPUHn_UNLOCK, − Lock: 0x112ABB56 − Unlock: 0xACCABB56
Peripheral Protection	See the TRAVEO™ T1G Platform Hardware Manual in detail. Protected peripherals are described in the base address map.
Internal Memories System SRAM	384 kByte 1 wait cycle is necessary for RAM read at over 120 MHz.
Internal Memories TCRAM	128 kByte
Internal Memories Backup RAM	32 kByte Backup RAM can only be operated in RUN mode (normal operation mode). In other mode the memory content should be retained, but it cannot be operated. SLEEP control for Backup RAM is not supported and cannot be used.

Feature	Description
Embedded Program/Work Flash Memory	Embedded Program Flash can be accessed with 0-wait-cycle if CPU frequency is 80 MHz or less. 0-wait-cycle: 80 MHz or less. 1-wait-cycle: 160 MHz or less. 2-wait-cycle: more than 160 MHz. Work Flash can be accessed with 0-wait-cycle if CPU frequency is 12.5 MHz or less. 6-wait-cycle: 80 MHz or less. 12-wait-cycle: 160 MHz or less. The wait-cycle setting see the TRAVEO™ T1G Platform Hardware Manual in details. The CLK_FCLK maximum frequency should be referred in 9.1.4.3. Erase suspend is supported. Reading and writing to the other sector are possible when Flash Erase is suspended. Serial Flash programing and Parallel Flash programing are supported. Margin mode is not supported.
Internal Power Domain	PD1: Always ON PD2: Cortex R5F platform/ additional peripherals PD4: Backup RAM in Always On domain PD6: Peripherals in Always On domain * The chapter of the block diagram explains in detail.
Power Supply	5 V, and 3 V, 1.2 V external power supply is required. Built in LDO provides internal power supply for Always On region (PD1). 1.2 V external power supply control pin is supported. 3 V external power supply could be controlled by GPIO. There are constraints of power on/off sequence.
Low Voltage Detection	LVD for external voltage is supported. LVD for internal voltage is supported. See 9.1.4.11 and 9.1.4.12 .
Low voltage detection for RAM retention (RVD)	RVD for RAM retention is effective during the standby mode only. That is, it is only for the Backup RAM of 32 KB that the function is available.
Resource inter-connect	The output signal of some resources can be inputted to the other resource.
I/O Ports	5 V general purpose I/O 3 V general purpose I/O Multi input level and multi output drivability Pull-up, pull-down function is available. Resource input and output is multiplexed. +B input is allowed many pins of 3.3 V, 5 V and 3.3 V/5 V I/O domain.
A/D Converter	12 bit resolution, 2 unit(Unit0 is possible to select channels 0-31. Unit1 is possible to select channels 32-63.) 64 channels of analog input for TEQFP208 48 channels of analog input for TEQFP176 35 channel of analog input for TEQFP144 External trigger and timer trigger are available. The description of the A/D converter function should be referred in the S6J3300 Hardware Manual. Though the chapter of I/O port in TRAVEO™ T1G Platform Hardware Manual describes another A/D converter function, do not refer it. A/D Channel Control Register (ADC12Bn_CHCTRL0)[bit5:0] ANIN[5:0]: Analog Input Selection bits. This register setting is possible of channel 0-31 (the register value is 00_0000 to 01_1111). AN39 to AN63 are not support for S6J335xxAx, S6J335xxCx, S6J335xxEx, and S6J335xxGx option.
CRC	See the TRAVEO™ T1G Platform Hardware Manual in detail.
Programmable CRC	DMA support

Feature	Description
Base Timer	See the TRAVEO™ T1G Platform Hardware Manual in detail. A unit consists of a pair of 16bit base timers. 32 units, that is, 64 channels of base timers are available.
Reload Timer	See the TRAVEO™ T1G Platform Hardware Manual in detail.
I/O Timer	See the TRAVEO™ T1G Platform Hardware Manual in detail.
Up/Down Counter	See the TRAVEO™ T1G Platform Hardware Manual in detail.
Multi-Functional Serial (MFS)	See the TRAVEO™ T1G Platform Hardware Manual in detail. Only 2 ports of MFS have the dedicated I/O for I^2C. See I^2C timing in 9.1.4.6 Multi-Function Serial in detail. The I^2C is not designed to be hot swappable. CTS/RTS is not mounted (hardware flow control is not supported for this series.)
CAN-FD	Flexible data rate is supported. 16 KB/ch of message RAM is available. The clock output from CAN pre-scaler is supplied to every CAN. ECC error generation function of the message RAM is not supported for this device. Therefore, CAN FD ECC Error Insertion Control Register (FDFECR) is not writeable.
Real Time Clock (RTC) with auto-calibration	See the TRAVEO™ T1G Platform Hardware Manual in detail.
DDR High Speed SPI	ch.0: HSSPI as a MCU peripheral
Hyper BUS I/F	ch.0: Hyper Bus as a MCU peripheral The following register is not supported and cannot be used. – Controller Status Register (HYPERBUSIn_CSR) – Interrupt Enable Register (HYPERBUSIn_IEN) – Interrupt Status Register (HYPERBUSIn_ISR) – Write Protection Register (HYPERBUSIn_WPR) – Test Register (HYPERBUSIn_TEST) GPO signal can only be used for "Internal Control example by GPO" in this product, that is, it can select using HyperBus of TRAVEO™ T1G Platform Hardware Manual.
External Interrupt Capture Unit (EICU)	See the TRAVEO™ T1G Platform Hardware Manual in detail.
Ethernet AVB	10/100 Mbps MII-Interface Supports Audio-Video Bridging (AVB)
SHE	See the TRAVEO™ T1G Platform Hardware Manual in detail.
Source Clock Timer	See the TRAVEO™ T1G Platform Hardware Manual in detail.
External BUS	TEQFP208: 22 bit address and 16 bit data TEQFP176: 22 bit address and 16 bit data TEQFP144: 15 bit address and 8 bit data
Power Supply Control (PSC)	PSC (PSC_1) output is used for external 1.2 V power supply module control and automatically switched with the following condition. "High": Request to supply VCC12 - "Power ON Reset" is released - CPU wakes up from PSS shutdown mode "Low": Request to stop supplying VCC12 - CPU transfers from RUN mode to PSS shutdown mode. For timing chart of output signals include PSC in detail, see the "S6J3300 Hardware Manual" and chapter "State Transition"

3.2.1 Ethernet

The following functions are not supported.

Functions	Remarks
External FIFO Interface	
Additional Low Latency TX FIFO Interface for DMA configurations	
MAC Transmit Block - half-duplex - collision - back pressure	
MAC Filtering Block - external address match - Wakeup On Lan	
Energy Efficient Ethernet support	
LPI Operation in Cadence IP	
PHY Interface - GMII - SGMII - TBI	
10/100/1000 Operation - 1000 M	
SGMII Operation	
Jumbo Frames	
Physical Control Sub-Layer	

4. Package and Pin Assignment

4.1 Pin Assignment

Alphabets with pin numbers are signs specify I/O circuit type.

4.1.1 TEQFP-208 Pin Assignment

Figure 4-1: TEQFP-208 (S6J335xKyz *1)

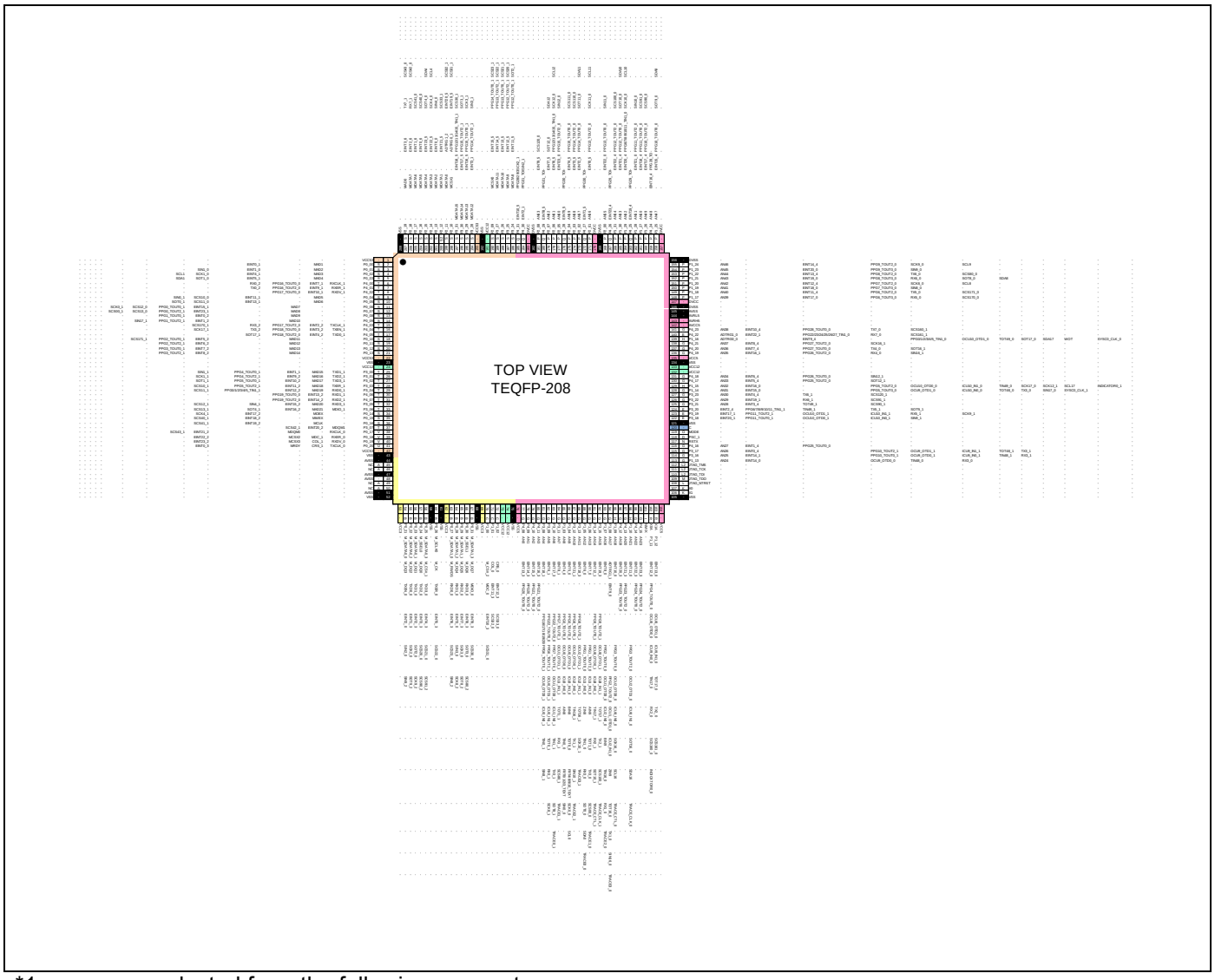

*1: x, y, z are selected from the following parameters:
x: E, D (Memory Size)
y: S, A, B, U, C, D, T, E, F, V, G, H (Option)
z: C, D, E (Revision)

4.1.2 TEQFP-176 Pin Assignment

Figure 4-2: TEQFP-176 (S6J335xJyz *1)

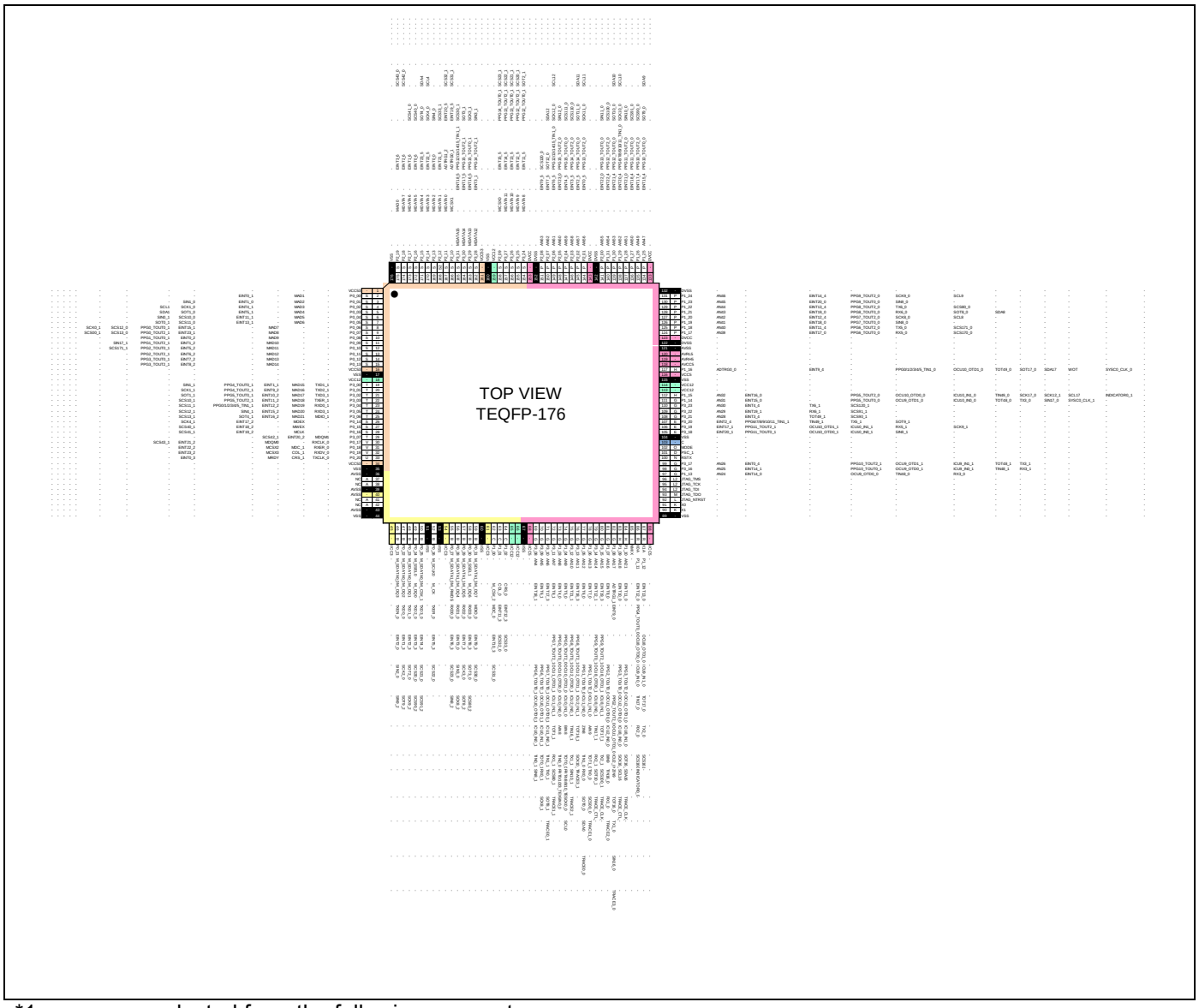

*1: x, y, z are selected from the following parameters:
x: E, D (Memory Size)
y: S, A, B, U, C, D, T, E, F, V, G, H (Option)
z: C, D, E (Revision)

4.1.3 TEQFP-144 Pin Assignment

Figure 4-3: TEQFP-144 (S6J335xHyz *1)

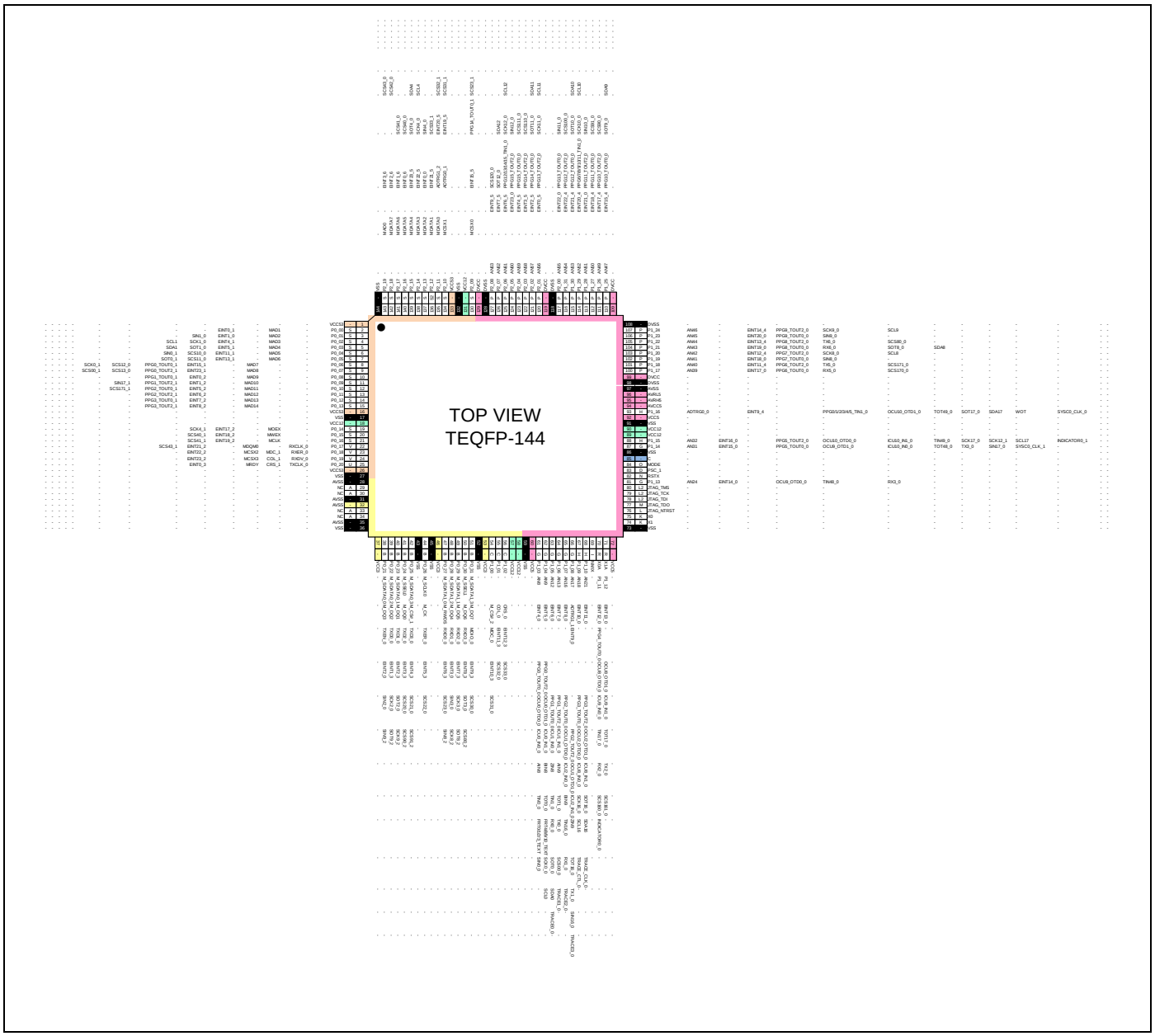

*1: x, y, z are selected from the following parameters:
x: E, D (Memory Size)
y: S, A, B, U, C, D, T, E, F, V, G, H (Option)
z: C, D, E (Revision)

4.2 Package Dimensions

4.2.1 TEQFP208

Figure 4-4: TEQFP208

Package Type	Package Code
TEQFP 208pin	LEW208

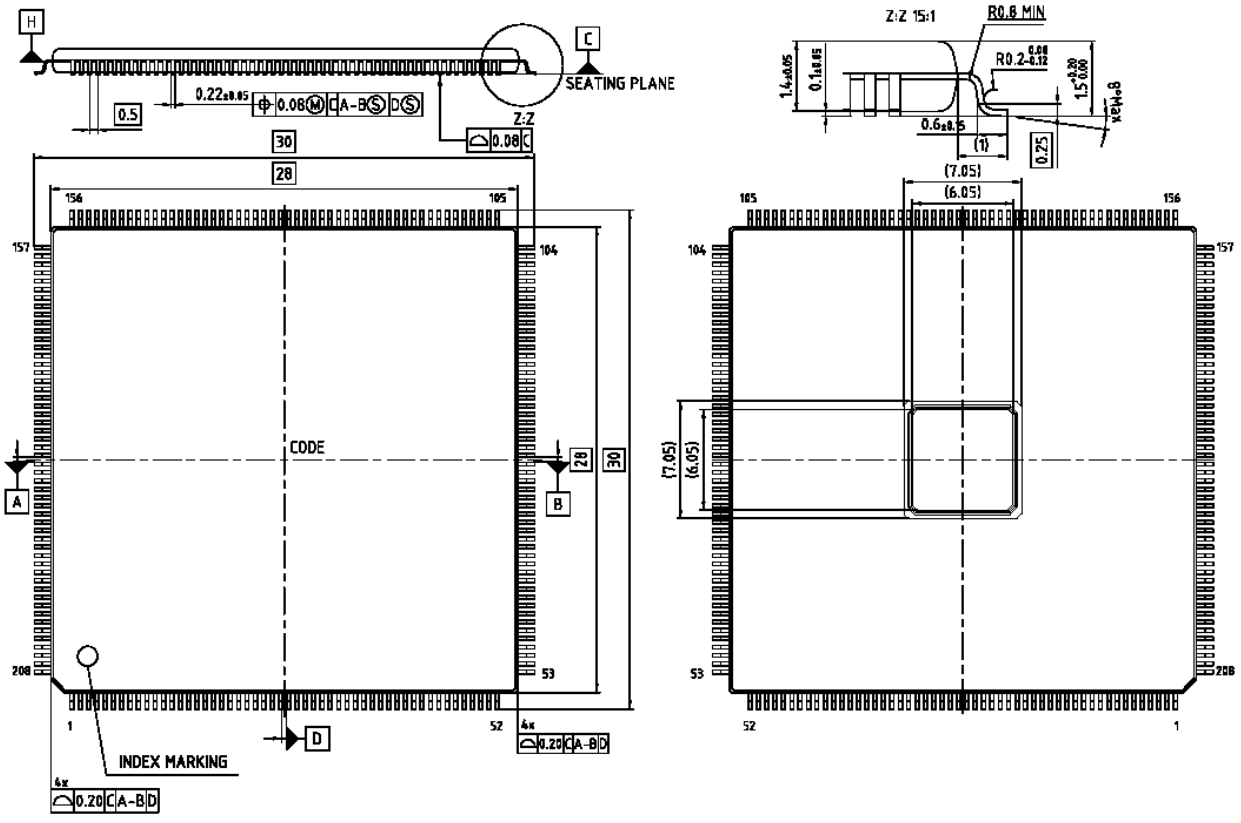

4.2.2 TEQFP176

Figure 4-5: TEQFP176

Package Type	Package Code
TEQFP 176pin	LEV176

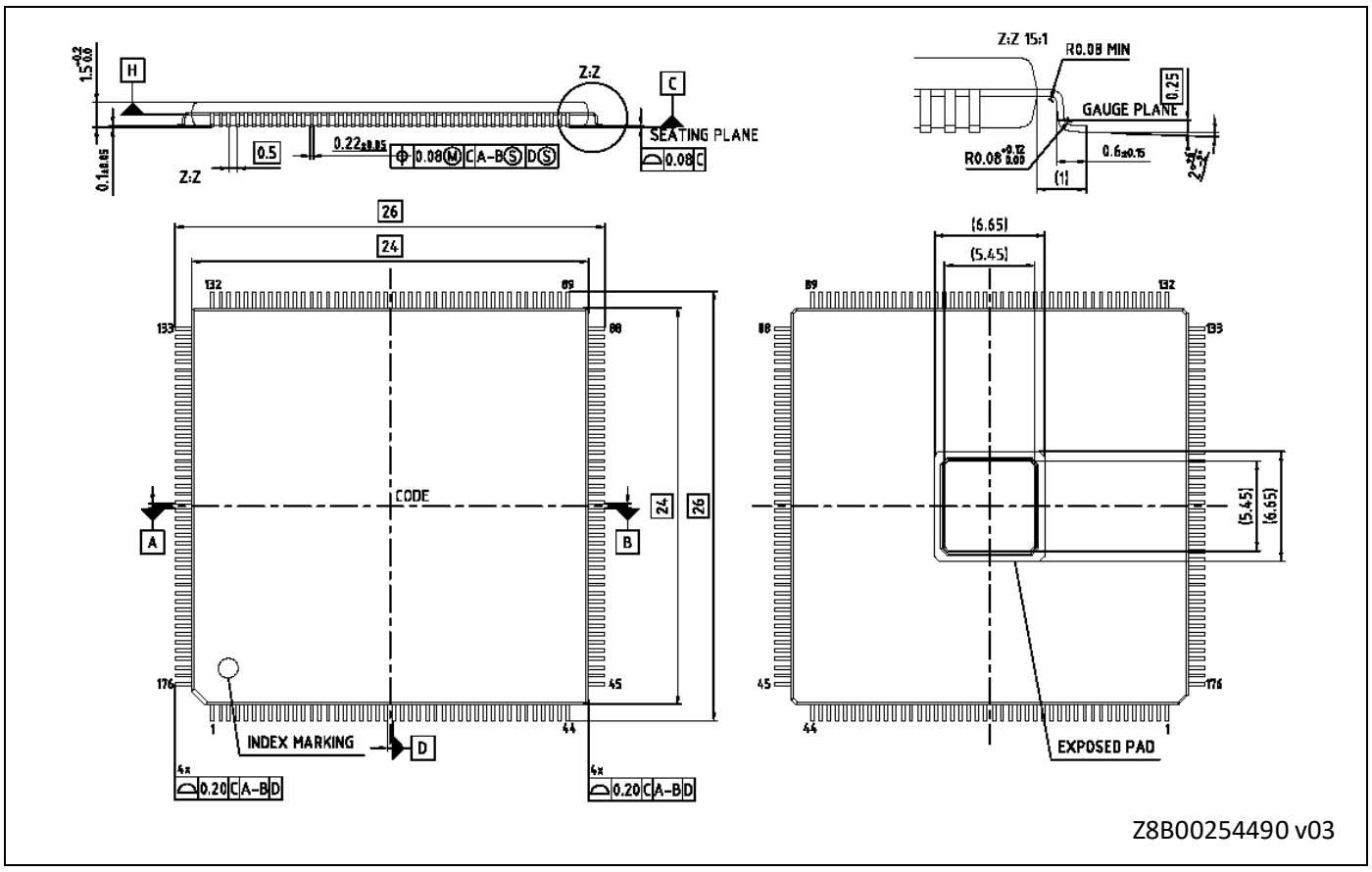

4.2.3 TEQFP144

Figure 4-6: TEQFP144 (0.5mm Pitch)

Package Type	Package Code
TEQFP 144pin	LEX144

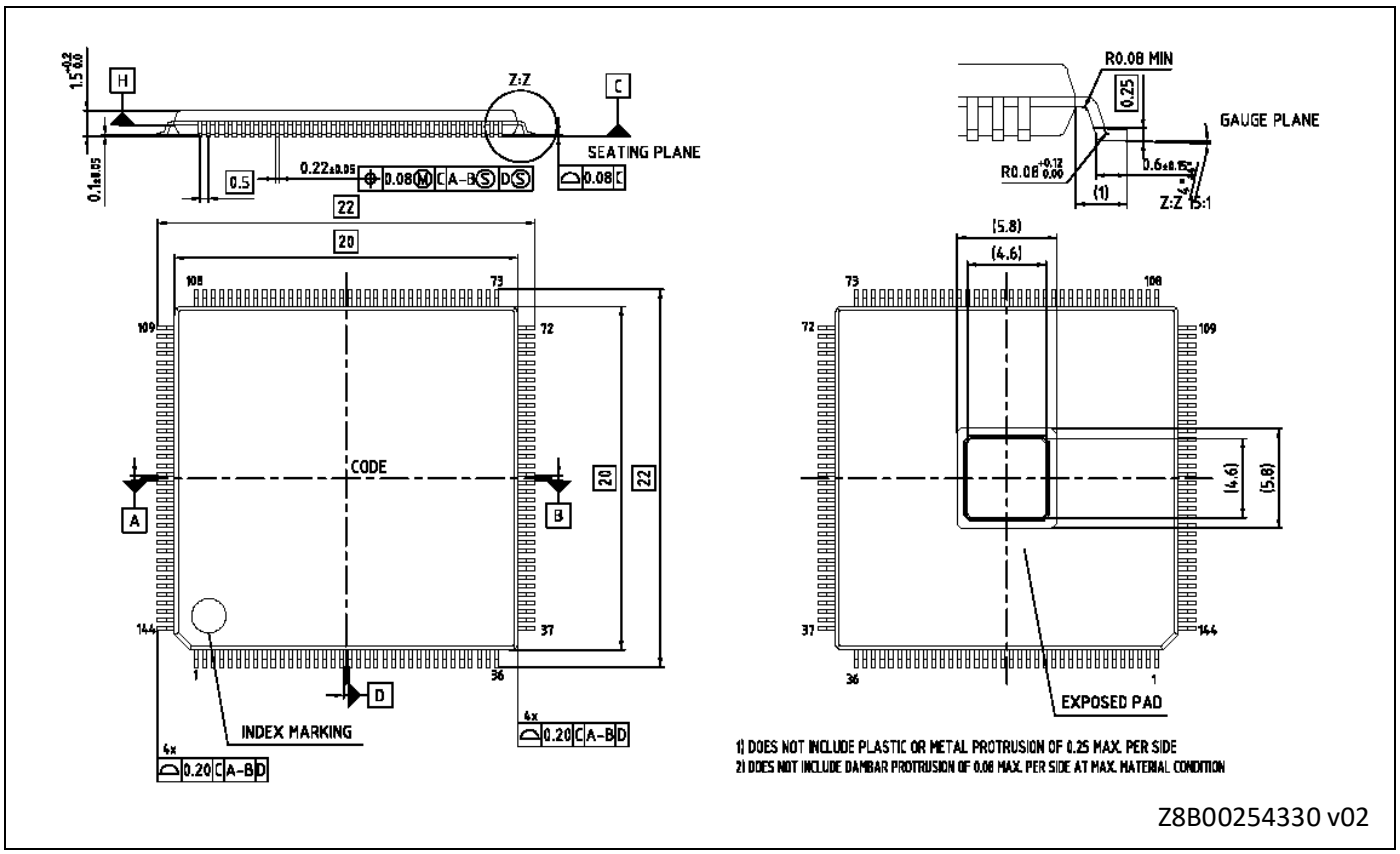

Figure 4-7: TEQFP144 (0.4mm Pitch)

Package Type	Package Code
TEQFP 144pin	LEK144

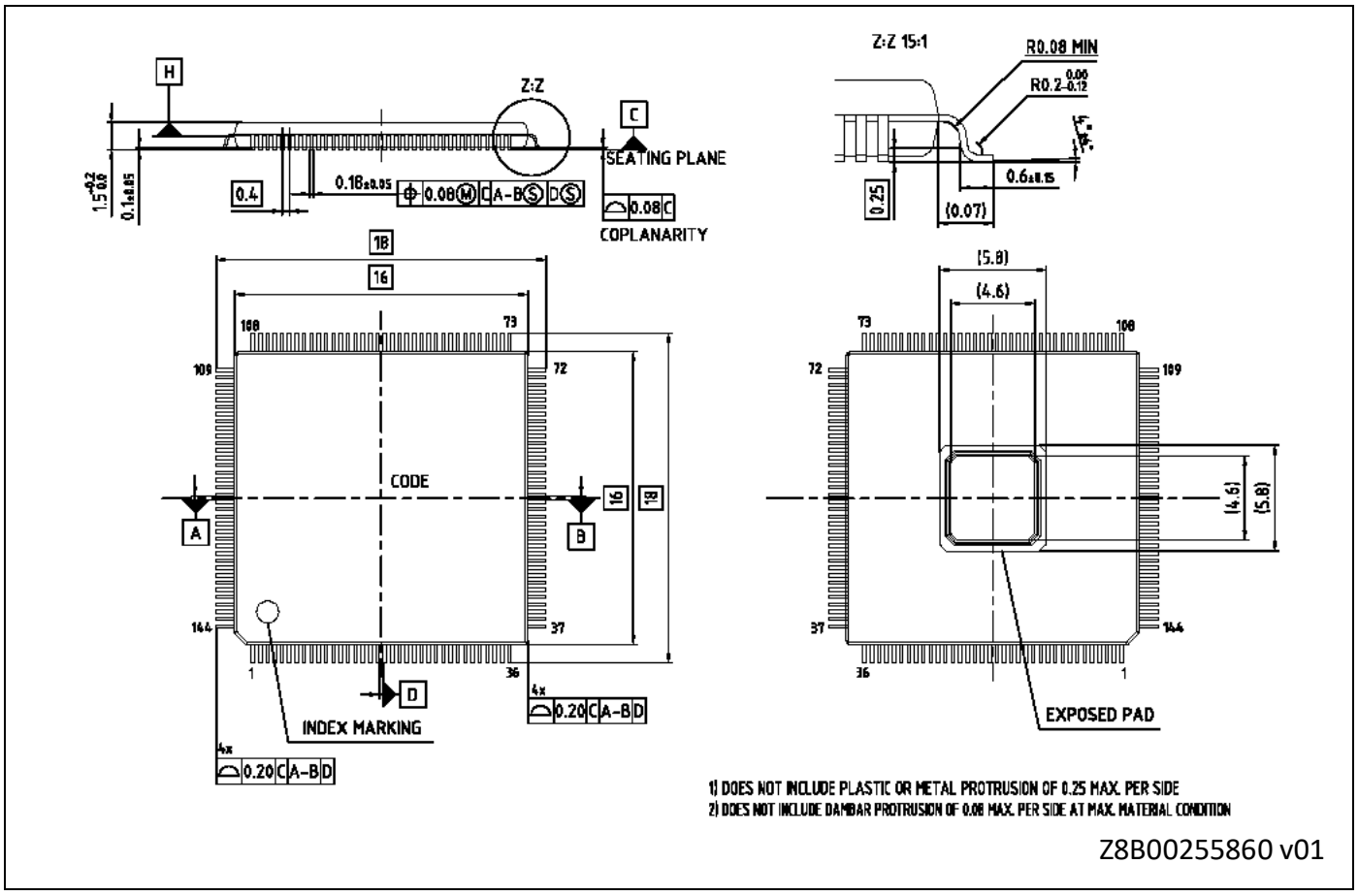

5. IO Circuit Type

5.1 I/O Circuit Type

This section explains I/O circuit types.

Type	Circuit	Remarks
B	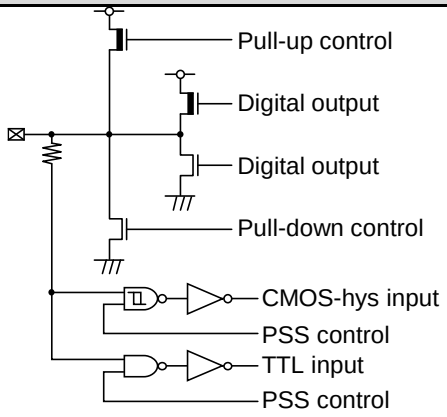	– General-purpose I/O port – Output 2 mA, 5 mA, 6 mA or 15 mA selectable – 50 kΩ with pull-up resistor control – 50 kΩ with pull-down resistor control – CMOS hysteresis input – TTL input
C	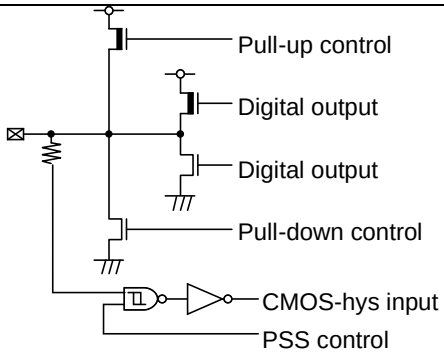	– General-purpose I/O port – Output 2 mA, 5 mA, 6 mA or 15 mA selectable – 50 kΩ with pull-up resistor control – 50 kΩ with pull-down resistor control – CMOS hysteresis input
D	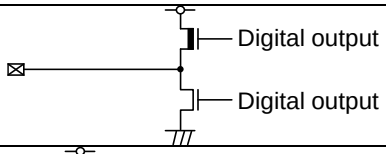	– External 1.2 V regulator control – Output 2 mA
E	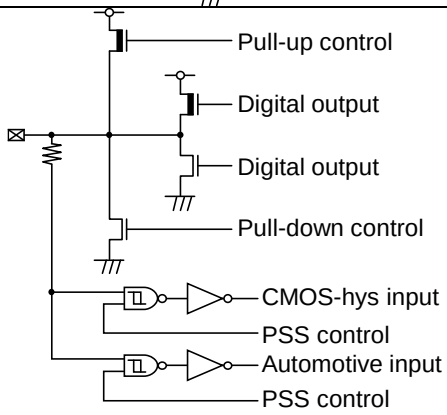	– General-purpose I/O port – Output 1 mA, 2 mA or 5 mA selectable – 50 kΩ with pull-up resistor control – 50 kΩ with pull-down resistor control – CMOS hysteresis input – Automotive hysteresis input

Type	Circuit	Remarks
G	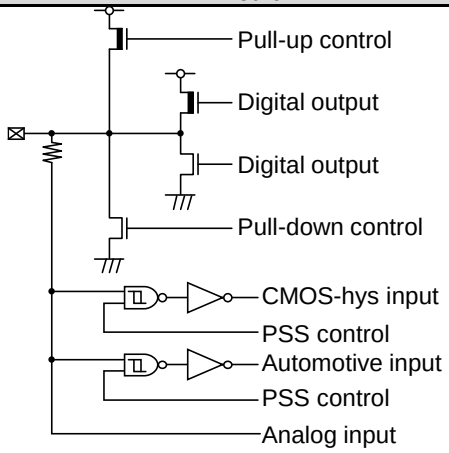	– General-purpose I/O port with analog input – Output 1 mA, 2 mA or 5 mA selectable – 50 kΩ with pull-up resistor control – 50 kΩ with pull-down resistor control – CMOS hysteresis input – Automotive hysteresis input
H	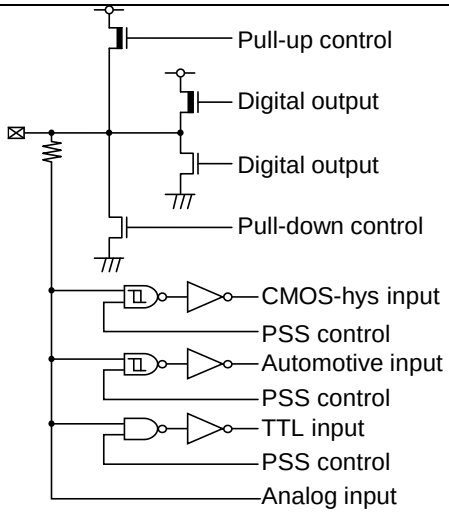	– General-purpose I/O port with analog input – Output 1 mA, 2 mA, 3 mA(I^2C) or 5 mA selectable – 50 kΩ with pull-up resistor control – 50 kΩ with pull-down resistor control – CMOS hysteresis input – Automotive hysteresis input – TTL input
I	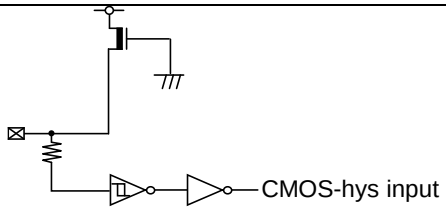	– 50 kΩ with pull-up – CMOS hysteresis input
K	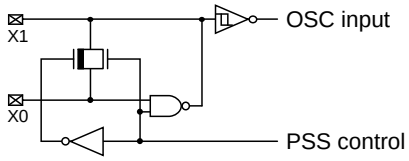	– Main oscillation I/O
L	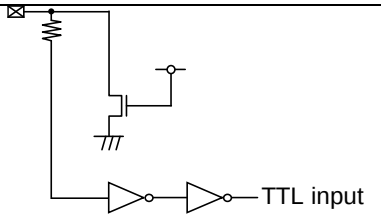	– JTAG_NTRST – 50 kΩ with pull-down – TTL input

Type	Circuit	Remarks
L2	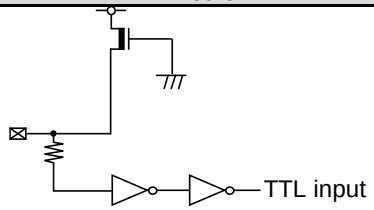	– JTAG_TDI/TMS/TCK – 50 kΩ with pull-up – TTL input
M	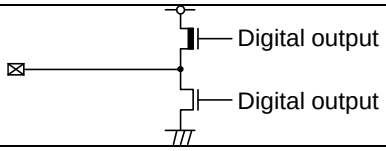	– JTAG_TDO – Output 5 mA
N	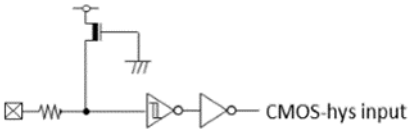	– RSTX input – 50 kΩ with pull-up – CMOS hysteresis input
O	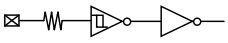	– CMOS hysteresis input
P	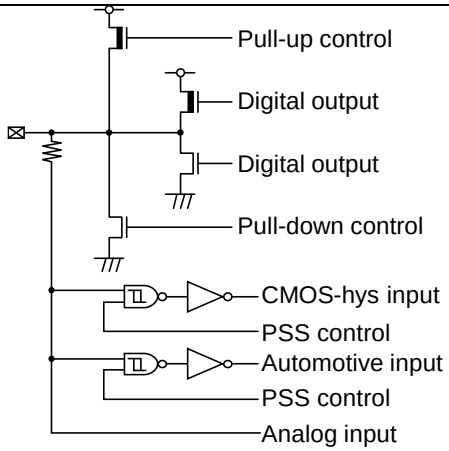	– General-purpose I/O port with analog input – Output 1 mA, 2 mA, 5 mA or 30 mA selectable – 50 kΩ with pull-up resistor control – 50 kΩ with pull-down resistor control – CMOS hysteresis input – Automotive hysteresis input
Q	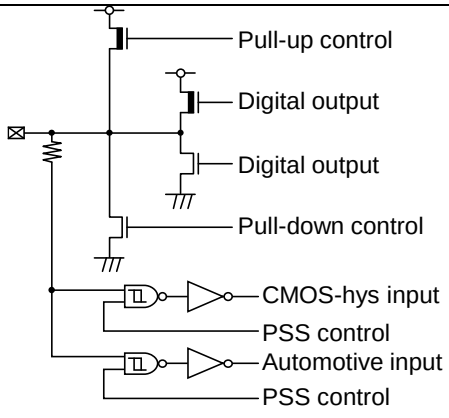	– General-purpose I/O port – Output 1 mA, 2 mA, 5 mA or 30 mA selectable – 50 kΩ with pull-up resistor control – 50 kΩ with pull-down resistor control – CMOS hysteresis input – Automotive hysteresis input

Type	Circuit	Remarks
R	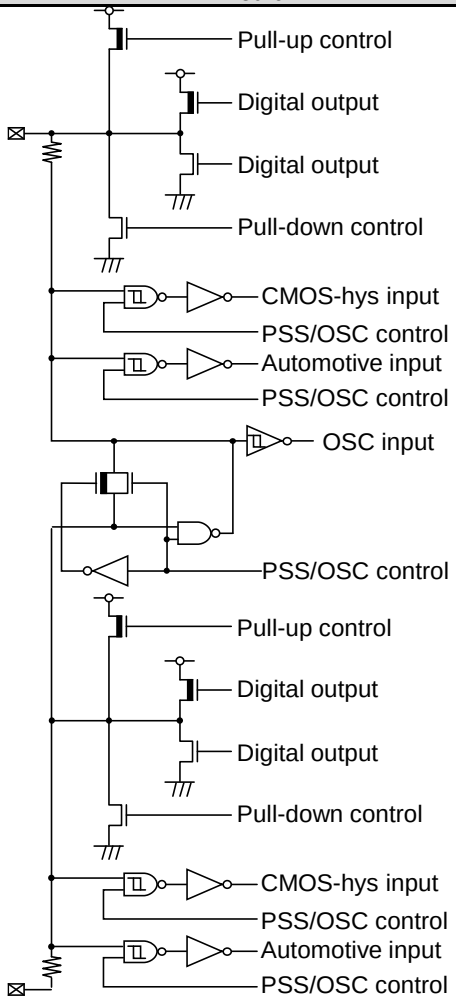	– Sub oscillation I/O shared General-purpose I/O port – Output 1 mA, 2 mA or 5 mA selectable – 50 kΩ with pull-up resistor control – 50 kΩ with pull-down resistor control – CMOS hysteresis input – Automotive hysteresis input
T	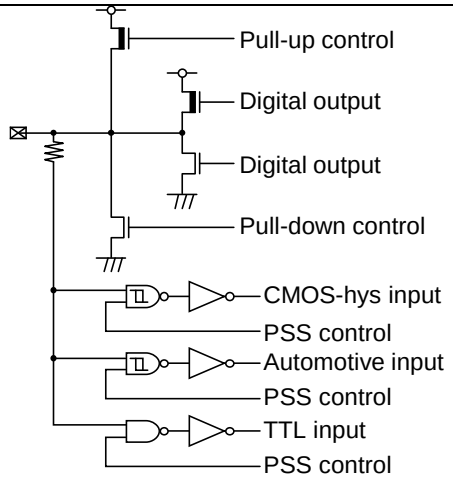	– General-purpose I/O port – Output 1 mA, 2 mA or 5 mA selectable – 50 kΩ with pull-up resistor control – 50 kΩ with pull-down resistor control – CMOS hysteresis input – Automotive hysteresis input – TTL input

Type	Circuit	Remarks
U	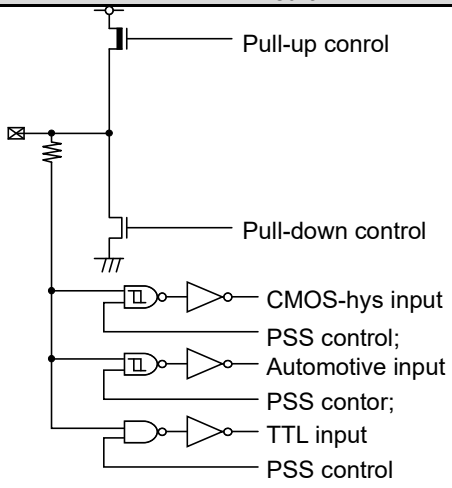	– General-purpose input port – 50 kΩ with pull-up resistor control – 50 kΩ with pull-down resistor control – CMOS hysteresis input – Automotive hysteresis input – TTL input

5.2 Note

Alphabet which shows I/O circuit type is described with corresponding pin number in pin assignment figure.

6. Port Description

6.1 Port Description List

This table shows the port function of description which is supported. The port function which is not described in the table is not supported for the product.

Port Name	Description	Package Pin Number			Remarks
		TEQFP 144	TEQFP 176	TEQFP 208	
VCC12	1.2 V external power supply pin	18, 57, 58, 89, 90, 131	18, 65, 66, 113, 114, 159	24, 73, 74, 132, 133, 191	
VCC5	5 V external power supply pin	60, 72, 92	68, 88, 116	76, 104, 135,	
VCC3	3 V external power supply pin	37, 46, 53	45, 54, 61	53, 62, 69	
VCC53	3 V/5 V external power supply pin	1, 16, 26, 133	1, 16, 34, 161	1, 22, 42, 193	
VSS	GND	17, 27, 36, 43, 45, 52, 59, 73, 86, 91, 132, 144	17, 35, 44, 51, 53, 60, 67, 89, 104, 115, 160, 176	23, 43, 52, 59, 61, 68, 75, 105, 121, 134, 192, 208	
NC	No connection	29, 30, 33, 34	37, 38, 41, 42	45, 46, 49, 50	
AVCC5	A/D converter analog power supply pin	94	118	142	
AVRH5	A/D converter upper limit reference voltage pin	95	119	143	
AVRL5	A/D converter lower limit reference voltage pin	96	120	144	
AVSS	A/D converter GND	28, 31, 32, 35, 97	36, 39, 40, 43, 121	44, 47, 48, 51, 145	
DVCC	3 V/5 V external power supply pin	99 109 119 129	123 133 143 153	147 157 170 183	
DVSS	GND	98 108 118 128	122 132 142 152	146 156 169 182	
X1	Main clock oscillator output pin	74	90	106	
X0	Main clock oscillator input pin	75	91	107	
X1A	Sub-clock oscillator output	71	87	103	

Port Name	Description	Package Pin Number			Remarks
		TEQFP 144	TEQFP 176	TEQFP 208	
X0A	Sub-clock oscillator input	70	86	102	
NMIX	Non-maskable interrupt input pin	69	85	101	
RSTX	External reset input pin	82	100	117	
PSC_1	External Power Supply Control pin	83	101	118	
MODE	Mode Pin	84	102	119	
C	External capacity connection output pin	85	103	120	
JTAG_NTRST	JTAG test reset input pin	76	92	108	
JTAG_TDO	JTAG test data output pin	77	93	109	
JTAG_TDI	JTAG test data input pin	78	94	110	
JTAG_TCK	JTAG test clock input pin	79	95	111	
JTAG_TMS	JTAG test mode state input pin	80	96	112	
TRACE0_0	Trace data 0 output pin (0)	63	77	89	
TRACE1_0	Trace data 1 output pin (0)	64	78	90	
TRACE2_0	Trace data 2 output pin (0)	65	81	93	
TRACE3_0	Trace data 3 output pin (0)	66	82	94	
TRACE_CLK_0	Trace clock (0)	68	84	98	
TRACE_CTL_0	Trace control (0)	67	83	95	
TRACE0_1	Trace data 0 output pin (1)	-	71	83	
TRACE1_1	Trace data 1 output pin (1)	-	72	84	
TRACE2_1	Trace data 2 output pin (1)	-	75	87	
TRACE3_1	Trace data 3 output pin (1)	-	76	88	
TRACE_CLK_1	Trace clock (1)	-	80	92	
TRACE_CTL_1	Trace control (1)	-	79	91	
ADTRG0_0	A/D converter external trigger input pin (0)	93	117	139	
ADTRG1_0	A/D converter external trigger input pin (0)	-	-	140	
ADTRG0_1	A/D converter external trigger input pin (1)	134	166	198	
ADTRG1_1	A/D converter external trigger input pin (1)	66	82	94	
ADTRG1_2	A/D converter external trigger input pin (2)	135	167	199	
AN0	ADC Unit0 ch.0 input pin	-	-	77	
AN1	ADC Unit0 ch.1 input pin	-	-	78	
AN2	ADC Unit0 ch.2 input pin	-	-	79	
AN3	ADC Unit0 ch.3 input pin	-	-	80	
AN4	ADC Unit0 ch.4 input pin	-	69	81	
AN5	ADC Unit0 ch.5 input pin	-	70	82	
AN6	ADC Unit0 ch.6 input pin	-	71	83	
AN7	ADC Unit0 ch.7 input pin	-	72	84	
AN8	ADC Unit0 ch.8 input pin	61	73	85	
AN9	ADC Unit0 ch.9 input pin	62	74	86	
AN10	ADC Unit0 ch.10 input pin	-	75	87	
AN11	ADC Unit0 ch.11 input pin	-	76	88	
AN12	ADC Unit0 ch.12 input pin	63	77	89	
AN13	ADC Unit0 ch.13 input pin	64	78	90	
AN14	ADC Unit0 ch.14 input pin	-	79	91	
AN15	ADC Unit0 ch.15 input pin	-	80	92	
AN16	ADC Unit0 ch.16 input pin	65	81	93	
AN17	ADC Unit0 ch.17 input pin	66	82	94	
AN18	ADC Unit0 ch.18 input pin	67	83	95	
AN19	ADC Unit0 ch.19 input pin	-	-	96	
AN20	ADC Unit0 ch.20 input pin	-	-	97	

Port Name	Description	Package Pin Number			Remarks
		TEQFP 144	TEQFP 176	TEQFP 208	
AN21	ADC Unit0 ch.21 input pin	68	84	98	
AN22	ADC Unit0 ch.22 input pin	-	-	99	
AN23	ADC Unit0 ch.23 input pin	-	-	100	
AN24	ADC Unit0 ch.24 input pin	81	97	113	
AN25	ADC Unit0 ch.25 input pin	-	98	114	
AN26	ADC Unit0 ch.26 input pin	-	99	115	
AN27	ADC Unit0 ch.27 input pin	-	-	116	
AN28	ADC Unit0 ch.28 input pin	-	108	125	
AN29	ADC Unit0 ch.29 input pin	-	109	126	
AN30	ADC Unit0 ch.30 input pin	-	110	127	
AN31	ADC Unit0 ch.31 input pin	87	111	128	
AN32	ADC Unit1 ch.32 input pin	88	112	129	
AN33	ADC Unit1 ch.33 input pin	-	-	130	
AN34	ADC Unit1 ch.34 input pin	-	-	131	
AN35	ADC Unit1 ch.35 input pin	-	-	136	
AN36	ADC Unit1 ch.36 input pin	-	-	137	
AN37	ADC Unit1 ch.37 input pin	-	-	138	
AN38	ADC Unit1 ch.38 input pin	-	-	141	
AN39	ADC Unit1 ch.39 input pin	100	124	148	
AN40	ADC Unit1 ch.40 input pin	101	125	149	
AN41	ADC Unit1 ch.41 input pin	102	126	150	
AN42	ADC Unit1 ch.42 input pin	103	127	151	
AN43	ADC Unit1 ch.43 input pin	104	128	152	
AN44	ADC Unit1 ch.44 input pin	105	129	153	
AN45	ADC Unit1 ch.45 input pin	106	130	154	
AN46	ADC Unit1 ch.46 input pin	107	131	155	
AN47	ADC Unit1 ch.47 input pin	110	134	158	
AN48	ADC Unit1 ch.48 input pin	-	-	159	
AN49	ADC Unit1 ch.49 input pin	111	135	160	
AN50	ADC Unit1 ch.50 input pin	112	136	161	
AN51	ADC Unit1 ch.51 input pin	113	137	162	
AN52	ADC Unit1 ch.52 input pin	114	138	164	
AN53	ADC Unit1 ch.53 input pin	115	139	165	
AN54	ADC Unit1 ch.54 input pin	116	140	166	
AN55	ADC Unit1 ch.55 input pin	117	141	168	
AN56	ADC Unit1 ch.56 input pin	120	144	171	
AN57	ADC Unit1 ch.57 input pin	121	145	173	
AN58	ADC Unit1 ch.58 input pin	122	146	174	
AN59	ADC Unit1 ch.59 input pin	123	147	175	
AN60	ADC Unit1 ch.60 input pin	124	148	177	
AN61	ADC Unit1 ch.61 input pin	125	149	178	
AN62	ADC Unit1 ch.62 input pin	126	150	179	
AN63	ADC Unit1 ch.63 input pin	127	151	181	
TX0_0	CAN transmission data 0 output pin (0)	64	78	90	
TX1_0	CAN transmission data 1 output pin (0)	66	82	94	
TX2_0	CAN transmission data 2 output pin (0)	71	87	103	
TX3_0	CAN transmission data 3 output pin (0)	87	111	128	
TX4_0	CAN transmission data 4 output pin (0)	-	-	137	
TX5_0	CAN transmission data 5 output pin (0)	101	125	149	

Port Name	Description	Package Pin Number			Remarks
		TEQFP 144	TEQFP 176	TEQFP 208	
TX6_0	CAN transmission data 6 output pin (0)	105	129	153	
TX7_0	CAN transmission data 7 output pin (0)	-	-	141	
TX0_1	CAN transmission data 0 output pin (1)	-	71	83	
TX1_1	CAN transmission data 1 output pin (1)	-	75	87	
TX2_1	CAN transmission data 2 output pin (1)	-	80	92	
TX3_1	CAN transmission data 3 output pin (1)	-	99	115	
TX5_1	CAN transmission data 5 output pin (1)	-	107	124	
TX6_1	CAN transmission data 6 output pin (1)	-	110	127	
TX7_1	CAN transmission data 7 output pin (1)	-	-	207	
TX0_2	CAN transmission data 0 output pin (2)	-	-	7	
TX3_2	CAN transmission data 3 output pin (2)	-	-	16	
RX0_0	CAN reception data 0 input pin (0)	63	77	89	
RX1_0	CAN reception data 1 input pin (0)	65	81	93	
RX2_0	CAN reception data 2 input pin (0)	70	86	102	
RX3_0	CAN reception data 3 input pin (0)	81	97	113	
RX4_0	CAN reception data 4 input pin (0)	-	-	136	
RX5_0	CAN reception data 5 input pin (0)	100	124	148	
RX6_0	CAN reception data 6 input pin (0)	104	128	152	
RX7_0	CAN reception data 7 input pin (0)	-	-	140	
RX0_1	CAN reception data 0 input pin (1)	-	70	82	
RX1_1	CAN reception data 1 input pin (1)	-	72	84	
RX2_1	CAN reception data 2 input pin (1)	-	79	91	
RX3_1	CAN reception data 3 input pin (1)	-	98	114	
RX5_1	CAN reception data 5 input pin (1)	-	106	123	
RX6_1	CAN reception data 6 input pin (1)	-	109	126	
RX7_1	CAN reception data 7 input pin (1)	-	-	206	
RX0_2	CAN reception data 0 input pin (2)	-	-	6	
RX3_2	CAN reception data 3 input pin (2)	-	-	15	
EINT0_0	External interrupt input pin (0)	137	169	201	
EINT1_0	External interrupt input pin (0)	3	3	3	
EINT2_0	External interrupt input pin (0)	38	46	54	
EINT3_0	External interrupt input pin (0)	48	56	64	
EINT4_0	External interrupt input pin (0)	61	73	85	
EINT5_0	External interrupt input pin (0)	62	74	86	
EINT6_0	External interrupt input pin (0)	63	77	89	
EINT7_0	External interrupt input pin (0)	64	78	90	
EINT8_0	External interrupt input pin (0)	65	81	93	
EINT9_0	External interrupt input pin (0)	66	82	94	
EINT10_0	External interrupt input pin (0)	67	83	95	
EINT11_0	External interrupt input pin (0)	68	84	98	
EINT12_0	External interrupt input pin (0)	70	86	102	
EINT13_0	External interrupt input pin (0)	71	87	103	
EINT14_0	External interrupt input pin (0)	81	97	113	
EINT15_0	External interrupt input pin (0)	87	111	128	
EINT16_0	External interrupt input pin (0)	88	112	129	
EINT17_0	External interrupt input pin (0)	100	124	148	
EINT18_0	External interrupt input pin (0)	102	126	150	
EINT19_0	External interrupt input pin (0)	104	128	152	
EINT20_0	External interrupt input pin (0)	106	130	154	

Port Name	Description	Package Pin Number			Remarks
		TEQFP 144	TEQFP 176	TEQFP 208	
EINT21_0	External interrupt input pin (0)	113	137	162	
EINT22_0	External interrupt input pin (0)	117	141	168	
EINT23_0	External interrupt input pin (0)	124	148	177	
EINT0_1	External interrupt input pin (1)	2	2	2	
EINT1_1	External interrupt input pin (1)	-	19	25	
EINT2_1	External interrupt input pin (1)	-	-	184	
EINT3_1	External interrupt input pin (1)	-	162	194	
EINT4_1	External interrupt input pin (1)	4	4	4	
EINT5_1	External interrupt input pin (1)	5	5	5	
EINT6_1	External interrupt input pin (1)	-	70	82	
EINT7_1	External interrupt input pin (1)	-	-	6	
EINT8_1	External interrupt input pin (1)	-	72	84	
EINT9_1	External interrupt input pin (1)	-	-	7	
EINT10_1	External interrupt input pin (1)	-	-	8	
EINT11_1	External interrupt input pin (1)	6	6	9	
EINT12_1	External interrupt input pin (1)	-	79	91	
EINT13_1	External interrupt input pin (1)	7	7	10	
EINT14_1	External interrupt input pin (1)	-	98	114	
EINT15_1	External interrupt input pin (1)	8	8	11	
EINT16_1	External interrupt input pin (1)	-	-	136	
EINT17_1	External interrupt input pin (1)	-	106	123	
EINT18_1	External interrupt input pin (1)	-	69	81	
EINT19_1	External interrupt input pin (1)	-	109	126	
EINT20_1	External interrupt input pin (1)	-	105	122	
EINT21_1	External interrupt input pin (1)	-	75	87	
EINT22_1	External interrupt input pin (1)	-	-	140	
EINT23_1	External interrupt input pin (1)	9	9	12	
EINT0_2	External interrupt input pin (2)	10	10	13	
EINT1_2	External interrupt input pin (2)	11	11	14	
EINT2_2	External interrupt input pin (2)	-	-	15	
EINT3_2	External interrupt input pin (2)	-	-	16	
EINT4_2	External interrupt input pin (2)	-	-	17	
EINT5_2	External interrupt input pin (2)	12	12	18	
EINT6_2	External interrupt input pin (2)	13	13	19	
EINT7_2	External interrupt input pin (2)	14	14	20	
EINT8_2	External interrupt input pin (2)	15	15	21	
EINT9_2	External interrupt input pin (2)	-	20	26	
EINT10_2	External interrupt input pin (2)	-	21	27	
EINT11_2	External interrupt input pin (2)	-	22	28	
EINT12_2	External interrupt input pin (2)	-	23	29	
EINT13_2	External interrupt input pin (2)	-	-	30	
EINT14_2	External interrupt input pin (2)	-	-	31	
EINT15_2	External interrupt input pin (2)	-	24	32	
EINT16_2	External interrupt input pin (2)	-	25	33	
EINT17_2	External interrupt input pin (2)	19	26	34	
EINT18_2	External interrupt input pin (2)	20	27	35	
EINT19_2	External interrupt input pin (2)	21	28	36	
EINT20_2	External interrupt input pin (2)	-	29	37	
EINT21_2	External interrupt input pin (2)	22	30	38	

Port Name	Description	Package Pin Number			Remarks
		TEQFP 144	TEQFP 176	TEQFP 208	
EINT22_2	External interrupt input pin (2)	23	31	39	
EINT23_2	External interrupt input pin (2)	24	32	40	
EINT0_3	External interrupt input pin (3)	25	33	41	
EINT1_3	External interrupt input pin (3)	39	47	55	
EINT2_3	External interrupt input pin (3)	40	48	56	
EINT3_3	External interrupt input pin (3)	41	49	57	
EINT4_3	External interrupt input pin (3)	42	50	58	
EINT5_3	External interrupt input pin (3)	44	52	60	
EINT6_3	External interrupt input pin (3)	47	55	63	
EINT7_3	External interrupt input pin (3)	49	57	65	
EINT8_3	External interrupt input pin (3)	50	58	66	
EINT9_3	External interrupt input pin (3)	51	59	67	
EINT10_3	External interrupt input pin (3)	54	62	70	
EINT11_3	External interrupt input pin (3)	55	63	71	
EINT12_3	External interrupt input pin (3)	56	64	72	
EINT13_3	External interrupt input pin (3)	-	-	77	
EINT14_3	External interrupt input pin (3)	-	-	78	
EINT15_3	External interrupt input pin (3)	-	-	79	
EINT16_3	External interrupt input pin (3)	-	-	80	
EINT17_3	External interrupt input pin (3)	-	71	83	
EINT18_3	External interrupt input pin (3)	-	76	88	
EINT19_3	External interrupt input pin (3)	-	80	92	
EINT20_3	External interrupt input pin (3)	-	-	96	
EINT21_3	External interrupt input pin (3)	-	-	97	
EINT22_3	External interrupt input pin (3)	-	-	99	
EINT23_3	External interrupt input pin (3)	-	-	100	
EINT0_4	External interrupt input pin (4)	-	99	115	
EINT1_4	External interrupt input pin (4)	-	-	116	
EINT2_4	External interrupt input pin (4)	-	107	124	
EINT3_4	External interrupt input pin (4)	-	108	125	
EINT4_4	External interrupt input pin (4)	-	110	127	
EINT5_4	External interrupt input pin (4)	-	-	130	
EINT6_4	External interrupt input pin (4)	-	-	131	
EINT7_4	External interrupt input pin (4)	-	-	137	
EINT8_4	External interrupt input pin (4)	-	-	138	
EINT9_4	External interrupt input pin (4)	93	117	139	
EINT10_4	External interrupt input pin (4)	-	-	141	
EINT11_4	External interrupt input pin (4)	101	125	149	
EINT12_4	External interrupt input pin (4)	103	127	151	
EINT13_4	External interrupt input pin (4)	105	129	153	
EINT14_4	External interrupt input pin (4)	107	131	155	
EINT15_4	External interrupt input pin (4)	110	134	158	
EINT16_4	External interrupt input pin (4)	-	-	159	
EINT17_4	External interrupt input pin (4)	111	135	160	
EINT18_4	External interrupt input pin (4)	112	136	161	
EINT19_4	External interrupt input pin (4)	-	-	163	
EINT20_4	External interrupt input pin (4)	114	138	164	
EINT21_4	External interrupt input pin (4)	115	139	165	
EINT22_4	External interrupt input pin (4)	116	140	166	

Port Name	Description	Package Pin Number			Remarks
		TEQFP 144	TEQFP 176	TEQFP 208	
EINT23_4	External interrupt input pin (4)	-	-	167	
EINT0_5	External interrupt input pin (5)	120	144	171	
EINT1_5	External interrupt input pin (5)	-	-	172	
EINT2_5	External interrupt input pin (5)	121	145	173	
EINT3_5	External interrupt input pin (5)	122	146	174	
EINT4_5	External interrupt input pin (5)	123	147	175	
EINT5_5	External interrupt input pin (5)	-	-	176	
EINT6_5	External interrupt input pin (5)	125	149	178	
EINT7_5	External interrupt input pin (5)	126	150	179	
EINT8_5	External interrupt input pin (5)	-	-	180	
EINT9_5	External interrupt input pin (5)	127	151	181	
EINT10_5	External interrupt input pin (5)	-	-	185	
EINT11_5	External interrupt input pin (5)	-	154	186	
EINT12_5	External interrupt input pin (5)	-	155	187	
EINT13_5	External interrupt input pin (5)	-	156	188	
EINT14_5	External interrupt input pin (5)	-	157	189	
EINT15_5	External interrupt input pin (5)	130	158	190	
EINT16_5	External interrupt input pin (5)	-	163	195	
EINT17_5	External interrupt input pin (5)	-	164	196	
EINT18_5	External interrupt input pin (5)	-	165	197	
EINT19_5	External interrupt input pin (5)	134	166	198	
EINT20_5	External interrupt input pin (5)	135	167	199	
EINT21_5	External interrupt input pin (5)	136	168	200	
EINT22_5	External interrupt input pin (5)	138	170	202	
EINT23_5	External interrupt input pin (5)	139	171	203	
EINT0_6	External interrupt input pin (6)	140	172	204	
EINT1_6	External interrupt input pin (6)	141	173	205	
EINT2_6	External interrupt input pin (6)	142	174	206	
EINT3_6	External interrupt input pin (6)	143	175	207	
SCS00_0	Multi-function serial ch.0 chip select 0 I/O pin (0)	64	78	90	
SCS10_0	Multi-function serial ch.1 chip select 0 I/O pin (0)	6	6	9	
SCS11_0	Multi-function serial ch.1 chip select 1 output pin (0)	7	7	10	
SCS12_0	Multi-function serial ch.1 chip select 2 output pin (0)	8	8	11	
SCS13_0	Multi-function serial ch.1 chip select 3 output pin (0)	9	9	12	
SCS20_0	Multi-function serial ch.2 chip select 0 I/O pin (0)	41	49	57	
SCS21_0	Multi-function serial ch.2 chip select 1 output pin (0)	42	50	58	
SCS22_0	Multi-function serial ch.2 chip select 2 output pin (0)	44	52	60	
SCS23_0	Multi-function serial ch.2 chip select 3 output pin (0)	47	55	63	
SCS30_0	Multi-function serial ch.3 chip select 0 I/O pin (0)	51	59	67	
SCS31_0	Multi-function serial ch.3 chip select 1 output pin (0)	54	62	70	
SCS32_0	Multi-function serial ch.3 chip select 2 output pin (0)	55	63	71	
SCS33_0	Multi-function serial ch.3 chip select 3 output pin (0)	56	64	72	
SCS40_0	Multi-function serial ch.4 chip select 0 I/O pin (0)	140	172	204	
SCS41_0	Multi-function serial ch.4 chip select 1 output pin (0)	141	173	205	
SCS42_0	Multi-function serial ch.4 chip select 2 output pin (0)	142	174	206	
SCS43_0	Multi-function serial ch.4 chip select 3 output pin (0)	143	175	207	
SCS80_0	Multi-function serial ch.8 chip select 0 I/O pin (0)	105	129	153	
SCS90_0	Multi-function serial ch.9 chip select 0 I/O pin (0)	111	135	160	
SCS91_0	Multi-function serial ch.9 chip select 1 output pin (0)	112	136	161	

Port Name	Description	Package Pin Number			Remarks
		TEQFP 144	TEQFP 176	TEQFP 208	
SCS100_0	Multi-function serial ch.10 chip select 0 I/O pin (0)	116	140	166	
SCS110_0	Multi-function serial ch.11 chip select 0 I/O pin (0)	122	146	174	
SCS111_0	Multi-function serial ch.11 chip select 1 output pin (0)	123	147	175	
SCS120_0	Multi-function serial ch.12 chip select 0 I/O pin (0)	127	151	181	
SCS160_0	Multi-function serial ch.16 chip select 0 I/O pin (0)	70	86	102	
SCS161_0	Multi-function serial ch.16 chip select 1 output pin (0)	71	87	103	
SCS170_0	Multi-function serial ch.17 chip select 0 I/O pin (0)	100	124	148	
SCS171_0	Multi-function serial ch.17 chip select 1 output pin (0)	101	125	149	
SCS00_1	Multi-function serial ch.0 chip select 0 I/O pin (1)	9	9	12	
SCS10_1	Multi-function serial ch.1 chip select 0 I/O pin (1)	-	22	28	
SCS11_1	Multi-function serial ch.1 chip select 1 output pin (1)	-	23	29	
SCS12_1	Multi-function serial ch.1 chip select 2 output pin (1)	-	24	32	
SCS13_1	Multi-function serial ch.1 chip select 3 output pin (1)	-	25	33	
SCS20_1	Multi-function serial ch.2 chip select 0 I/O pin (1)	-	155	187	
SCS21_1	Multi-function serial ch.2 chip select 1 output pin (1)	-	156	188	
SCS22_1	Multi-function serial ch.2 chip select 2 output pin (1)	-	157	189	
SCS23_1	Multi-function serial ch.2 chip select 3 output pin (1)	130	158	190	
SCS30_1	Multi-function serial ch.3 chip select 0 I/O pin (1)	-	165	197	
SCS31_1	Multi-function serial ch.3 chip select 1 output pin (1)	134	166	198	
SCS32_1	Multi-function serial ch.3 chip select 2 output pin (1)	135	167	199	
SCS33_1	Multi-function serial ch.3 chip select 3 output pin (1)	136	168	200	
SCS40_1	Multi-function serial ch.4 chip select 0 I/O pin (1)	20	27	35	
SCS41_1	Multi-function serial ch.4 chip select 1 output pin (1)	21	28	36	
SCS42_1	Multi-function serial ch.4 chip select 2 output pin (1)	-	29	37	
SCS43_1	Multi-function serial ch.4 chip select 3 output pin (1)	22	30	38	
SCS80_1	Multi-function serial ch.8 chip select 0 I/O pin (1)	-	72	84	
SCS90_1	Multi-function serial ch.9 chip select 0 I/O pin (1)	-	108	125	
SCS91_1	Multi-function serial ch.9 chip select 1 output pin (1)	-	109	126	
SCS100_1	Multi-function serial ch.10 chip select 0 I/O pin (1)	-	80	92	
SCS120_1	Multi-function serial ch.12 chip select 0 I/O pin (1)	-	110	127	
SCS160_1	Multi-function serial ch.16 chip select 0 I/O pin (1)	-	-	141	
SCS161_1	Multi-function serial ch.16 chip select 1 output pin (1)	-	-	140	
SCS170_1	Multi-function serial ch.17 chip select 0 I/O pin (1)	-	-	15	
SCS171_1	Multi-function serial ch.17 chip select 1 output pin (1)	12	12	18	
SCS80_2	Multi-function serial ch.8 chip select 0 I/O pin (2)	50	58	66	
SCS90_2	Multi-function serial ch.9 chip select 0 I/O pin (2)	41	49	57	
SCS91_2	Multi-function serial ch.9 chip select 1 output pin (2)	42	50	58	
SCK0_0	Multi-function serial ch.0 clock I/O pin (0)	62	74	86	
SCK1_0	Multi-function serial ch.1 clock I/O pin (0)	4	4	4	
SCK2_0	Multi-function serial ch.2 clock I/O pin (0)	39	47	55	
SCK3_0	Multi-function serial ch.3 clock I/O pin (0)	49	57	65	
SCK4_0	Multi-function serial ch.4 clock I/O pin (0)	138	170	202	
SCK8_0	Multi-function serial ch.8 clock I/O pin (0)	103	127	151	
SCK9_0	Multi-function serial ch.9 clock I/O pin (0)	107	131	155	
SCK10_0	Multi-function serial ch.10 clock I/O pin (0)	114	138	164	
SCK11_0	Multi-function serial ch.11 clock I/O pin (0)	120	144	171	
SCK12_0	Multi-function serial ch.12 clock I/O pin (0)	125	149	178	
SCK16_0	Multi-function serial ch.16 clock I/O pin (0)	67	83	95	
SCK17_0	Multi-function serial ch.17 clock I/O pin (0)	88	112	129	

Port Name	Description	Package Pin Number			Remarks
		TEQFP 144	TEQFP 176	TEQFP 208	
SCK0_1	Multi-function serial ch.0 clock I/O pin (1)	8	8	11	
SCK1_1	Multi-function serial ch.1 clock I/O pin (1)	-	20	26	
SCK2_1	Multi-function serial ch.2 clock I/O pin (1)	-	-	185	
SCK3_1	Multi-function serial ch.3 clock I/O pin (1)	-	163	195	
SCK4_1	Multi-function serial ch.4 clock I/O pin (1)	19	26	34	
SCK8_1	Multi-function serial ch.8 clock I/O pin (1)	-	70	82	
SCK9_1	Multi-function serial ch.9 clock I/O pin (1)	-	106	123	
SCK10_1	Multi-function serial ch.10 clock I/O pin (1)	-	76	88	
SCK12_1	Multi-function serial ch.12 clock I/O pin (1)	88	112	129	
SCK16_1	Multi-function serial ch.16 clock I/O pin (1)	-	-	138	
SCK17_1	Multi-function serial ch.17 clock I/O pin (1)	-	-	16	
SCK8_2	Multi-function serial ch.8 clock I/O pin (2)	48	56	64	
SCK9_2	Multi-function serial ch.9 clock I/O pin (2)	40	48	56	
SIN0_0	Multi-function serial ch.0 serial data input pin (0)	61	73	85	
SIN1_0	Multi-function serial ch.1 serial data input pin (0)	3	3	3	
SIN2_0	Multi-function serial ch.2 serial data input pin (0)	38	46	54	
SIN3_0	Multi-function serial ch.3 serial data input pin (0)	48	56	64	
SIN4_0	Multi-function serial ch.4 serial data input pin (0)	137	169	201	
SIN8_0	Multi-function serial ch.8 serial data input pin (0)	102	126	150	
SIN9_0	Multi-function serial ch.9 serial data input pin (0)	106	130	154	
SIN10_0	Multi-function serial ch.10 serial data input pin (0)	113	137	162	
SIN11_0	Multi-function serial ch.11 serial data input pin (0)	117	141	168	
SIN12_0	Multi-function serial ch.12 serial data input pin (0)	124	148	177	
SIN16_0	Multi-function serial ch.16 serial data input pin (0)	66	82	94	
SIN17_0	Multi-function serial ch.17 serial data input pin (0)	87	111	128	
SIN0_1	Multi-function serial ch.0 serial data input pin (1)	6	6	9	
SIN1_1	Multi-function serial ch.1 serial data input pin (1)	-	19	25	
SIN2_1	Multi-function serial ch.2 serial data input pin (1)	-	-	184	
SIN3_1	Multi-function serial ch.3 serial data input pin (1)	-	162	194	
SIN4_1	Multi-function serial ch.4 serial data input pin (1)	-	24	32	
SIN8_1	Multi-function serial ch.8 serial data input pin (1)	-	69	81	
SIN9_1	Multi-function serial ch.9 serial data input pin (1)	-	105	122	
SIN10_1	Multi-function serial ch.10 serial data input pin (1)	-	75	87	
SIN12_1	Multi-function serial ch.12 serial data input pin (1)	-	-	131	
SIN16_1	Multi-function serial ch.16 serial data input pin (1)	-	-	136	
SIN17_1	Multi-function serial ch.17 serial data input pin (1)	11	11	14	
SIN8_2	Multi-function serial ch.8 serial data input pin (2)	47	55	63	
SIN9_2	Multi-function serial ch.9 serial data input pin (2)	38	46	54	
SOT0_0	Multi-function serial ch.0 serial data output pin (0)	63	77	89	
SOT1_0	Multi-function serial ch.1 serial data output pin (0)	5	5	5	
SOT2_0	Multi-function serial ch.2 serial data output pin (0)	40	48	56	
SOT3_0	Multi-function serial ch.3 serial data output pin (0)	50	58	66	
SOT4_0	Multi-function serial ch.4 serial data output pin (0)	139	171	203	
SOT8_0	Multi-function serial ch.8 serial data output pin (0)	104	128	152	
SOT9_0	Multi-function serial ch.9 serial data output pin (0)	110	134	158	
SOT10_0	Multi-function serial ch.10 serial data output pin (0)	115	139	165	
SOT11_0	Multi-function serial ch.11 serial data output pin (0)	121	145	173	
SOT12_0	Multi-function serial ch.12 serial data output pin (0)	126	150	179	
SOT16_0	Multi-function serial ch.16 serial data output pin (0)	68	84	98	

Port Name	Description	Package Pin Number			Remarks
		TEQFP 144	TEQFP 176	TEQFP 208	
SOT17_0	Multi-function serial ch.17 serial data output pin (0)	93	117	139	
SOT0_1	Multi-function serial ch.0 serial data output pin (1)	7	7	10	
SOT1_1	Multi-function serial ch.1 serial data output pin (1)	-	21	27	
SOT2_1	Multi-function serial ch.2 serial data output pin (1)	-	154	186	
SOT3_1	Multi-function serial ch.3 serial data output pin (1)	-	164	196	
SOT4_1	Multi-function serial ch.4 serial data output pin (1)	-	25	33	
SOT8_1	Multi-function serial ch.8 serial data output pin (1)	-	71	83	
SOT9_1	Multi-function serial ch.9 serial data output pin (1)	-	107	124	
SOT10_1	Multi-function serial ch.10 serial data output pin (1)	-	79	91	
SOT12_1	Multi-function serial ch.12 serial data output pin (1)	-	-	130	
SOT16_1	Multi-function serial ch.16 serial data output pin (1)	-	-	137	
SOT17_1	Multi-function serial ch.17 serial data output pin (1)	-	-	17	
SOT8_2	Multi-function serial ch.8 serial data output pin (2)	49	57	65	
SOT9_2	Multi-function serial ch.9 serial data output pin (2)	39	47	55	
SCL0	I^2C ch.0 clock I/O pin	62	74	86	
SCL1	I^2C ch.1 clock I/O pin	4	4	4	
SCL4	I^2C ch.4 clock I/O pin	138	170	202	
SCL8	I^2C ch.8 clock I/O pin	103	127	151	
SCL9	I^2C ch.9 clock I/O pin	107	131	155	
SCL10	I^2C ch.10 clock I/O pin	114	138	164	
SCL11	I^2C ch.11 clock I/O pin	120	144	171	
SCL12	I^2C ch.12 clock I/O pin	125	149	178	
SCL16	I^2C ch.16 clock I/O pin	67	83	95	
SCL17	I^2C ch.17 clock I/O pin	88	112	129	
SDA0	I^2C ch.0 serial data I/O pin	63	77	89	
SDA1	I^2C ch.1 serial data I/O pin	5	5	5	
SDA4	I^2C ch.4 serial data I/O pin	139	171	203	
SDA8	I^2C ch.8 serial data I/O pin	104	128	152	
SDA9	I^2C ch.9 serial data I/O pin	110	134	158	
SDA10	I^2C ch.10 serial data I/O pin	115	139	165	
SDA11	I^2C ch.11 serial data I/O pin	121	145	173	
SDA12	I^2C ch.12 serial data I/O pin	126	150	179	
SDA16	I^2C ch.16 serial data I/O pin	68	84	98	
SDA17	I^2C ch.17 serial data I/O pin	93	117	139	
PPG0_TOUT0_0	Base timer 0 output pin (0)	61	73	85	
PPG0_TOUT2_0	Base timer 1 output pin (0)	62	74	86	
PPG1_TOUT0_0	Base timer 2 output pin (0)	63	77	89	
PPG1_TOUT2_0	Base timer 3 output pin (0)	64	78	90	
PPG2_TOUT0_0	Base timer 4 output pin (0)	65	81	93	
PPG2_TOUT2_0	Base timer 5 output pin (0)	66	82	94	
PPG3_TOUT0_0	Base timer 6 output pin (0)	67	83	95	
PPG3_TOUT2_0	Base timer 7 output pin (0)	68	84	98	
PPG4_TOUT0_0	Base timer 8 output pin (0)	70	86	102	
PPG5_TOUT0_0	Base timer 10 output pin (0)	87	111	128	
PPG5_TOUT2_0	Base timer 11 output pin (0)	88	112	129	
PPG6_TOUT0_0	Base timer 12 output pin (0)	100	124	148	
PPG6_TOUT2_0	Base timer 13 output pin (0)	101	125	149	
PPG7_TOUT0_0	Base timer 14 output pin (0)	102	126	150	
PPG7_TOUT2_0	Base timer 15 output pin (0)	103	127	151	

Port Name	Description	Package Pin Number			Remarks
		TEQFP 144	TEQFP 176	TEQFP 208	
PPG8_TOUT0_0	Base timer 16 output pin (0)	104	128	152	
PPG8_TOUT2_0	Base timer 17 output pin (0)	105	129	153	
PPG9_TOUT0_0	Base timer 18 output pin (0)	106	130	154	
PPG9_TOUT2_0	Base timer 19 output pin (0)	107	131	155	
PPG10_TOUT0_0	Base timer 20 output pin (0)	110	134	158	
PPG10_TOUT2_0	Base timer 21 output pin (0)	111	135	160	
PPG11_TOUT0_0	Base timer 22 output pin (0)	112	136	161	
PPG11_TOUT2_0	Base timer 23 output pin (0)	113	137	162	
PPG12_TOUT0_0	Base timer 24 output pin (0)	115	139	165	
PPG12_TOUT2_0	Base timer 25 output pin (0)	116	140	166	
PPG13_TOUT0_0	Base timer 26 output pin (0)	117	141	168	
PPG13_TOUT2_0	Base timer 27 output pin (0)	120	144	171	
PPG14_TOUT0_0	Base timer 28 output pin (0)	121	145	173	
PPG14_TOUT2_0	Base timer 29 output pin (0)	122	146	174	
PPG15_TOUT0_0	Base timer 30 output pin (0)	123	147	175	
PPG15_TOUT2_0	Base timer 31 output pin (0)	124	148	177	
PPG16_TOUT0_0	Base timer 32 output pin (0)	-	-	6	
PPG16_TOUT2_0	Base timer 33 output pin (0)	-	-	7	
PPG17_TOUT0_0	Base timer 34 output pin (0)	-	-	8	
PPG17_TOUT2_0	Base timer 35 output pin (0)	-	-	15	
PPG18_TOUT0_0	Base timer 36 output pin (0)	-	-	16	
PPG18_TOUT2_0	Base timer 37 output pin (0)	-	-	17	
PPG19_TOUT0_0	Base timer 38 output pin (0)	-	-	30	
PPG19_TOUT2_0	Base timer 39 output pin (0)	-	-	31	
PPG20_TOUT0_0	Base timer 40 output pin (0)	-	-	77	
PPG20_TOUT2_0	Base timer 41 output pin (0)	-	-	78	
PPG21_TOUT0_0	Base timer 42 output pin (0)	-	-	79	
PPG21_TOUT2_0	Base timer 43 output pin (0)	-	-	80	
PPG22_TOUT0_0	Base timer 44 output pin (0)	-	-	82	
PPG22_TOUT2_0	Base timer 45 output pin (0)	-	-	83	
PPG23_TOUT0_0	Base timer 46 output pin (0)	-	-	96	
PPG23_TOUT2_0	Base timer 47 output pin (0)	-	-	97	
PPG24_TOUT0_0	Base timer 48 output pin (0)	-	-	99	
PPG24_TOUT2_0	Base timer 49 output pin (0)	-	-	100	
PPG25_TOUT0_0	Base timer 50 output pin (0)	-	-	116	
PPG25_TOUT2_0	Base timer 51 output pin (0)	-	-	130	
PPG26_TOUT0_0	Base timer 52 output pin (0)	-	-	131	
PPG26_TOUT2_0	Base timer 53 output pin (0)	-	-	136	
PPG27_TOUT0_0	Base timer 54 output pin (0)	-	-	137	
PPG27_TOUT2_0	Base timer 55 output pin (0)	-	-	138	
PPG28_TOUT0_0	Base timer 56 output pin (0)	-	-	141	
PPG28_TOUT2_0	Base timer 57 output pin (0)	-	-	159	
PPG29_TOUT0_0	Base timer 58 output pin (0)	-	-	163	
PPG29_TOUT2_0	Base timer 59 output pin (0)	-	-	167	
PPG30_TOUT0_0	Base timer 60 output pin (0)	-	-	172	
PPG30_TOUT2_0	Base timer 61 output pin (0)	-	-	176	
PPG31_TOUT0_0	Base timer 62 output pin (0)	-	-	180	
PPG31_TOUT2_0	Base timer 63 output pin (0)	-	-	184	
PPG0_TOUT0_1	Base timer 0 output pin (1)	8	8	11	

Port Name	Description	Package Pin Number			Remarks
		TEQFP 144	TEQFP 176	TEQFP 208	
PPG0_TOUT2_1	Base timer 1 output pin (1)	9	9	12	
PPG1_TOUT0_1	Base timer 2 output pin (1)	10	10	13	
PPG1_TOUT2_1	Base timer 3 output pin (1)	11	11	14	
PPG2_TOUT0_1	Base timer 4 output pin (1)	12	12	18	
PPG2_TOUT2_1	Base timer 5 output pin (1)	13	13	19	
PPG3_TOUT0_1	Base timer 6 output pin (1)	14	14	20	
PPG3_TOUT2_1	Base timer 7 output pin (1)	15	15	21	
PPG4_TOUT0_1	Base timer 8 output pin (1)	-	19	25	
PPG4_TOUT2_1	Base timer 9 output pin (1)	-	20	26	
PPG5_TOUT0_1	Base timer 10 output pin (1)	-	21	27	
PPG5_TOUT2_1	Base timer 11 output pin (1)	-	22	28	
PPG6_TOUT0_1	Base timer 12 output pin (1)	-	69	81	
PPG6_TOUT2_1	Base timer 13 output pin (1)	-	70	82	
PPG7_TOUT0_1	Base timer 14 output pin (1)	-	71	83	
PPG7_TOUT2_1	Base timer 15 output pin (1)	-	72	84	
PPG8_TOUT0_1	Base timer 16 output pin (1)	-	75	87	
PPG8_TOUT2_1	Base timer 17 output pin (1)	-	76	88	
PPG9_TOUT0_1	Base timer 18 output pin (1)	-	79	91	
PPG9_TOUT2_1	Base timer 19 output pin (1)	-	80	92	
PPG10_TOUT0_1	Base timer 20 output pin (1)	-	98	114	
PPG10_TOUT2_1	Base timer 21 output pin (1)	-	99	115	
PPG11_TOUT0_1	Base timer 22 output pin (1)	-	105	122	
PPG11_TOUT2_1	Base timer 23 output pin (1)	-	106	123	
PPG12_TOUT0_1	Base timer 24 output pin (1)	-	154	186	
PPG12_TOUT2_1	Base timer 25 output pin (1)	-	155	187	
PPG13_TOUT0_1	Base timer 26 output pin (1)	-	156	188	
PPG13_TOUT2_1	Base timer 27 output pin (1)	-	157	189	
PPG14_TOUT0_1	Base timer 28 output pin (1)	130	158	190	
PPG14_TOUT2_1	Base timer 29 output pin (1)	-	162	194	
PPG15_TOUT0_1	Base timer 30 output pin (1)	-	163	195	
PPG15_TOUT2_1	Base timer 31 output pin (1)	-	164	196	
PPG0/1/2/3/4/5_TIN1_0	Base timer 0/2/4/6/8/10 input pin (0)	93	117	139	
PPG6/7/8/9/10/11_TIN1_0	Base timer 12/14/16/18/20/22 input pin (0)	114	138	164	
PPG12/13/14/15_TIN1_0	Base timer 24/26/28/30 input pin (0)	125	149	178	
PPG16/17/18/19/20/21_TIN1_0	Base timer 32/34/36/38/40/42 input pin (0)	-	-	81	
PPG22/23/24/25/26/27_TIN1_0	Base timer 44/46/48/50/52/54 input pin (0)	-	-	140	
PPG28/29/30/31_TIN1_0	Base timer 56/58/60/62 input pin (0)	-	-	185	
PPG0/1/2/3/4/5_TIN1_1	Base timer 0/2/4/6/8/10 input pin (1)	-	23	29	
PPG6/7/8/9/10/11_TIN1_1	Base timer 12/14/16/18/20/22 input pin (1)	-	107	124	
PPG12/13/14/15_TIN1_1	Base timer 24/26/28/30 input pin (1)	-	165	197	
WOT	RTC overflow output pin	93	117	139	
OCU0_OTD0_0	Output compare 0 ch.0 output pin (0)	61	73	85	
OCU0_OTD1_0	Output compare 0 ch.1 output pin (0)	62	74	86	
OCU1_OTD0_0	Output compare 1 ch.0 output pin (0)	65	81	93	
OCU1_OTD1_0	Output compare 1 ch.1 output pin (0)	66	82	94	
OCU2_OTD0_0	Output compare 2 ch.0 output pin (0)	67	83	95	
OCU2_OTD1_0	Output compare 2 ch.1 output pin (0)	68	84	98	
OCU8_OTD0_0	Output compare 8 ch.0 output pin (0)	70	86	102	
OCU8_OTD1_0	Output compare 8 ch.1 output pin (0)	71	87	103	

Port Name	Description	Package Pin Number			Remarks
		TEQFP 144	TEQFP 176	TEQFP 208	
OCU9_OTD0_0	Output compare 9 ch.0 output pin (0)	81	97	113	
OCU9_OTD1_0	Output compare 9 ch.1 output pin (0)	87	111	128	
OCU10_OTD0_0	Output compare 10 ch.0 output pin (0)	88	112	129	
OCU10_OTD1_0	Output compare 10 ch.1 output pin (0)	93	117	139	
OCU0_OTD0_1	Output compare 0 ch.0 output pin (1)	-	69	81	
OCU0_OTD1_1	Output compare 0 ch.1 output pin (1)	-	70	82	
OCU1_OTD0_1	Output compare 1 ch.0 output pin (1)	-	71	83	
OCU1_OTD1_1	Output compare 1 ch.1 output pin (1)	-	72	84	
OCU2_OTD0_1	Output compare 2 ch.0 output pin (1)	-	75	87	
OCU2_OTD1_1	Output compare 2 ch.1 output pin (1)	-	76	88	
OCU8_OTD0_1	Output compare 8 ch.0 output pin (1)	-	79	91	
OCU8_OTD1_1	Output compare 8 ch.1 output pin (1)	-	80	92	
OCU9_OTD0_1	Output compare 9 ch.0 output pin (1)	-	98	114	
OCU9_OTD1_1	Output compare 9 ch.1 output pin (1)	-	99	115	
OCU10_OTD0_1	Output compare 10 ch.0 output pin (1)	-	105	122	
OCU10_OTD1_1	Output compare 10 ch.1 output pin (1)	-	106	123	
ICU0_IN0_0	Input Capture 0 ch.0 input pin (0)	61	73	85	
ICU0_IN1_0	Input Capture 0 ch.1 input pin (0)	62	74	86	
ICU1_IN0_0	Input Capture 1 ch.0 input pin (0)	63	77	89	
ICU1_IN1_0	Input Capture 1 ch.1 input pin (0)	64	78	90	
ICU2_IN0_0	Input Capture 2 ch.0 input pin (0)	65	81	93	
ICU2_IN1_0	Input Capture 2 ch.1 input pin (0)	66	82	94	
ICU8_IN0_0	Input Capture 8 ch.0 input pin (0)	67	83	95	
ICU8_IN1_0	Input Capture 8 ch.1 input pin (0)	68	84	98	
ICU9_IN0_0	Input Capture 9 ch.0 input pin (0)	70	86	102	
ICU9_IN1_0	Input Capture 9 ch.1 input pin (0)	71	87	103	
ICU10_IN0_0	Input Capture 10 ch.0 input pin (0)	87	111	128	
ICU10_IN1_0	Input Capture 10 ch.1 input pin (0)	88	112	129	
ICU0_IN0_1	Input Capture 0 ch.0 input pin (1)	-	69	81	
ICU0_IN1_1	Input Capture 0 ch.1 input pin (1)	-	70	82	
ICU1_IN0_1	Input Capture 1 ch.0 input pin (1)	-	71	83	
ICU1_IN1_1	Input Capture 1 ch.1 input pin (1)	-	72	84	
ICU2_IN0_1	Input Capture 2 ch.0 input pin (1)	-	75	87	
ICU2_IN1_1	Input Capture 2 ch.1 input pin (1)	-	76	88	
ICU8_IN0_1	Input Capture 8 ch.0 input pin (1)	-	79	91	
ICU8_IN1_1	Input Capture 8 ch.1 input pin (1)	-	80	92	
ICU9_IN0_1	Input Capture 9 ch.0 input pin (1)	-	98	114	
ICU9_IN1_1	Input Capture 9 ch.1 input pin (1)	-	99	115	
ICU10_IN0_1	Input Capture 10 ch.0 input pin (1)	-	105	122	
ICU10_IN1_1	Input Capture 10 ch.1 input pin (1)	-	106	123	
FRT0/1/2/3_TEXT	Free-run timer ch.0/1/2/3 clock input pin	61	73	85	
FRT4/8/9/10_TEXT	Free-run timer ch.4/8/9/10 clock input pin	62	74	86	
TIN0_0	Reload timer ch.0 event input pin (0)	61	73	85	
TIN1_0	Reload timer ch.1 event input pin (0)	63	77	89	
TIN16_0	Reload timer ch.16 event input pin (0)	65	81	93	
TIN17_0	Reload timer ch.17 event input pin (0)	70	86	102	
TIN48_0	Reload timer ch.48 event input pin (0)	81	97	113	
TIN49_0	Reload timer ch.49 event input pin (0)	88	112	129	
TIN0_1	Reload timer ch.0 event input pin (1)	-	69	81	

Port Name	Description	Package Pin Number			Remarks
		TEQFP 144	TEQFP 176	TEQFP 208	
TIN1_1	Reload timer ch.1 event input pin (1)	-	71	83	
TIN16_1	Reload timer ch.16 event input pin (1)	-	75	87	
TIN17_1	Reload timer ch.17 event input pin (1)	-	79	91	
TIN48_1	Reload timer ch.48 event input pin (1)	-	98	114	
TIN49_1	Reload timer ch.49 event input pin (1)	-	107	124	
TOT0_0	Reload timer ch.0 output pin (0)	62	74	86	
TOT1_0	Reload timer ch.1 output pin (0)	64	78	90	
TOT16_0	Reload timer ch.16 output pin (0)	66	82	94	
TOT17_0	Reload timer ch.17 output pin (0)	71	87	103	
TOT48_0	Reload timer ch.48 output pin (0)	87	111	128	
TOT49_0	Reload timer ch.49 output pin (0)	93	117	139	
TOT0_1	Reload timer ch.0 output pin (1)	-	70	82	
TOT1_1	Reload timer ch.1 output pin (1)	-	72	84	
TOT16_1	Reload timer ch.16 output pin (1)	-	76	88	
TOT17_1	Reload timer ch.17 output pin (1)	-	80	92	
TOT48_1	Reload timer ch.48 output pin (1)	-	99	115	
TOT49_1	Reload timer ch.49 output pin (1)	-	108	125	
AIN8	Up/Down counter AIN input pin ch.8	61	73	85	
AIN9	Up/Down counter AIN input pin ch.9	64	78	90	
BIN8	Up/Down counter BIN input pin ch.8	62	74	86	
BIN9	Up/Down counter BIN input pin ch.9	65	81	93	
ZIN8	Up/Down counter ZIN input pin ch.8	63	77	89	
ZIN9	Up/Down counter ZIN input pin ch.9	66	82	94	
RXD0_0	Ethernet pin (0)	47	55	63	
RXD1_0	Ethernet pin (0)	48	56	64	
RXD2_0	Ethernet pin (0)	49	57	65	
RXD3_0	Ethernet pin (0)	50	58	66	
TXD0_0	Ethernet pin (0)	39	47	55	
TXD1_0	Ethernet pin (0)	40	48	56	
TXD2_0	Ethernet pin (0)	41	49	57	
TXD3_0	Ethernet pin (0)	42	50	58	
COL_0	Ethernet pin (0)	55	63	71	
CRS_0	Ethernet pin (0)	56	64	72	
RXER_0	Ethernet pin (0)	23	31	39	
RXDV_0	Ethernet pin (0)	24	32	40	
RXCLK_0	Ethernet pin (0)	22	30	38	
TXER_0	Ethernet pin (0)	44	52	60	
TXEN_0	Ethernet pin (0)	38	46	54	
TXCLK_0	Ethernet pin (0)	25	33	41	
MDC_0	Ethernet pin (0)	54	62	70	
MDIO_0	Ethernet pin (0)	51	59	67	
RXD0_1	Ethernet pin (1)	-	23	29	
RXD1_1	Ethernet pin (1)	-	-	30	
RXD2_1	Ethernet pin (1)	-	-	31	
RXD3_1	Ethernet pin (1)	-	24	32	
TXD0_1	Ethernet pin (1)	-	-	17	
TXD1_1	Ethernet pin (1)	-	19	25	
TXD2_1	Ethernet pin (1)	-	20	26	
TXD3_1	Ethernet pin (1)	-	21	27	

Port Name	Description	Package Pin Number			Remarks
		TEQFP 144	TEQFP 176	TEQFP 208	
COL_1	Ethernet pin (1)	24	32	40	
CRS_1	Ethernet pin (1)	25	33	41	
RXER_1	Ethernet pin (1)	-	-	7	
RXDV_1	Ethernet pin (1)	-	-	8	
RXCLK_1	Ethernet pin (1)	-	-	6	
TXER_1	Ethernet pin (1)	-	22	28	
TXEN_1	Ethernet pin (1)	-	-	16	
TXCLK_1	Ethernet pin (1)	-	-	15	
MDC_1	Ethernet pin (1)	23	31	39	
MDIO_1	Ethernet pin (1)	-	25	33	
M_SCLK0	MCU HS-SPI clock output pin	44	52	60	
M_SDATA0_0	MCU HS-SPI0 data 0 I/O pin	38	46	54	
M_SDATA0_1	MCU HS-SPI0 data 1 I/O pin	40	48	56	
M_SDATA0_2	MCU HS-SPI0 data 2 I/O pin	39	47	55	
M_SDATA0_3	MCU HS-SPI0 data 3 I/O pin	42	50	58	
M_SDATA1_0	MCU HS-SPI1 data 0 I/O pin	47	55	63	
M_SDATA1_1	MCU HS-SPI1 data 1 I/O pin	49	57	65	
M_SDATA1_2	MCU HS-SPI1 data 2 I/O pin	48	56	64	
M_SDATA1_3	MCU HS-SPI1 data 3 I/O pin	51	59	67	
M_SSEL0	MCU HS-SPI0 select output pin	41	49	57	
M_SSEL1	MCU HS-SPI1 select output pin	50	58	66	
M_CK	MCU Hyper Bus clock output pin	44	52	60	
M_CS#_1	MCU Hyper Bus select 1 output pin	42	50	58	
M_CS#_2	MCU Hyper Bus select 2 output pin	54	62	70	
M_DQ0	MCU Hyper Bus Data 0 pin	41	49	57	
M_DQ1	MCU Hyper Bus Data 1 pin	40	48	56	
M_DQ2	MCU Hyper Bus Data 2 pin	39	47	55	
M_DQ3	MCU Hyper Bus Data 3 pin	38	46	54	
M_DQ4	MCU Hyper Bus Data 4 pin	48	56	64	
M_DQ5	MCU Hyper Bus Data 5 pin	49	57	65	
M_DQ6	MCU Hyper Bus Data 6 pin	50	58	66	
M_DQ7	MCU Hyper Bus Data 7 pin	51	59	67	
M_RWDS	MCU Hyper Bus RWDS	47	55	63	
INDICATOR0_0	Indicator PWM output pin 0 (It can also obtained from INDICATOR0_1)	70	86	102	
INDICATOR0_1	Indicator PWM output pin 1 (It can also obtained from INDICATOR0_0)	88	112	129	
SYSC0_CLK_0	System clock output pin (0)	93	117	139	
SYSC0_CLK_1	System clock output pin (1)	87	111	128	
MAD0	External Bus pin	143	175	207	
MAD1	External Bus pin	2	2	2	
MAD2	External Bus pin	3	3	3	
MAD3	External Bus pin	4	4	4	
MAD4	External Bus pin	5	5	5	
MAD5	External Bus pin	6	6	9	
MAD6	External Bus pin	7	7	10	
MAD7	External Bus pin	8	8	11	
MAD8	External Bus pin	9	9	12	
MAD9	External Bus pin	10	10	13	
MAD10	External Bus pin	11	11	14	

Port Name	Description	Package Pin Number			Remarks
		TEQFP 144	TEQFP 176	TEQFP 208	
MAD11	External Bus pin	12	12	18	
MAD12	External Bus pin	13	13	19	
MAD13	External Bus pin	14	14	20	
MAD14	External Bus pin	15	15	21	
MAD15	External Bus pin	-	19	25	
MAD16	External Bus pin	-	20	26	
MAD17	External Bus pin	-	21	27	
MAD18	External Bus pin	-	22	28	
MAD19	External Bus pin	-	23	29	
MAD20	External Bus pin	-	24	32	
MAD21	External Bus pin	-	25	33	
MDATA0	External Bus pin	135	167	199	
MDATA1	External Bus pin	136	168	200	
MDATA2	External Bus pin	137	169	201	
MDATA3	External Bus pin	138	170	202	
MDATA4	External Bus pin	139	171	203	
MDATA5	External Bus pin	140	172	204	
MDATA6	External Bus pin	141	173	205	
MDATA7	External Bus pin	142	174	206	
MDATA8	External Bus pin	-	154	186	
MDATA9	External Bus pin	-	155	187	
MDATA10	External Bus pin	-	156	188	
MDATA11	External Bus pin	-	157	189	
MDATA12	External Bus pin	-	162	194	
MDATA13	External Bus pin	-	163	195	
MDATA14	External Bus pin	-	164	196	
MDATA15	External Bus pin	-	165	197	
MCLK	External Bus pin	21	28	36	
MOEX	External Bus pin	19	26	34	
MWEX	External Bus pin	20	27	35	
MDQM0	External Bus pin	22	30	38	
MDQM1	External Bus pin	-	29	37	
MCSX0	External Bus pin	130	158	190	
MCSX1	External Bus pin	134	166	198	
MCSX2	External Bus pin	23	31	39	
MCSX3	External Bus pin	24	32	40	
MRDY	External Bus pin	25	33	41	
P0_00	General-Purpose I/O port	2	2	2	
P0_01	General-Purpose I/O port	3	3	3	
P0_02	General-Purpose I/O port	4	4	4	
P0_03	General-Purpose I/O port	5	5	5	
P0_04	General-Purpose I/O port	6	6	9	
P0_05	General-Purpose I/O port	7	7	10	
P0_06	General-Purpose I/O port	8	8	11	
P0_07	General-Purpose I/O port	9	9	12	
P0_08	General-Purpose I/O port	10	10	13	
P0_09	General-Purpose I/O port	11	11	14	
P0_10	General-Purpose I/O port	12	12	18	
P0_11	General-Purpose I/O port	13	13	19	

Port Name	Description	Package Pin Number			Remarks
		TEQFP 144	TEQFP 176	TEQFP 208	
P0_12	General-Purpose I/O port	14	14	20	
P0_13	General-Purpose I/O port	15	15	21	
P0_14	General-Purpose I/O port	19	26	34	
P0_15	General-Purpose I/O port	20	27	35	
P0_16	General-Purpose I/O port	21	28	36	
P0_17	General-Purpose I/O port	22	30	38	
P0_18	General-Purpose I/O port	23	31	39	
P0_19	General-Purpose I/O port	24	32	40	
P0_20	General-Purpose input port	25	33	41	
P0_21	General-Purpose I/O port	38	46	54	
P0_22	General-Purpose I/O port	39	47	55	
P0_23	General-Purpose I/O port	40	48	56	
P0_24	General-Purpose I/O port	41	49	57	
P0_25	General-Purpose I/O port	42	50	58	
P0_26	General-Purpose I/O port	44	52	60	
P0_27	General-Purpose I/O port	47	55	63	
P0_28	General-Purpose I/O port	48	56	64	
P0_29	General-Purpose I/O port	49	57	65	
P0_30	General-Purpose I/O port	50	58	66	
P0_31	General-Purpose I/O port	51	59	67	
P1_00	General-Purpose I/O port	54	62	70	
P1_01	General-Purpose I/O port	55	63	71	
P1_02	General-Purpose I/O port	56	64	72	
P1_03	General-Purpose I/O port	61	73	85	
P1_04	General-Purpose I/O port	62	74	86	
P1_05	General-Purpose I/O port	63	77	89	
P1_06	General-Purpose I/O port	64	78	90	
P1_07	General-Purpose I/O port	65	81	93	
P1_08	General-Purpose I/O port	66	82	94	
P1_09	General-Purpose I/O port	67	83	95	
P1_10	General-Purpose I/O port	68	84	98	
P1_11	General-Purpose I/O port	70	86	102	
P1_12	General-Purpose I/O port	71	87	103	
P1_13	General-Purpose I/O port	81	97	113	
P1_14	General-Purpose I/O port	87	111	128	
P1_15	General-Purpose I/O port	88	112	129	
P1_16	General-Purpose I/O port	93	117	139	
P1_17	General-Purpose I/O port	100	124	148	
P1_18	General-Purpose I/O port	101	125	149	
P1_19	General-Purpose I/O port	102	126	150	
P1_20	General-Purpose I/O port	103	127	151	
P1_21	General-Purpose I/O port	104	128	152	
P1_22	General-Purpose I/O port	105	129	153	
P1_23	General-Purpose I/O port	106	130	154	
P1_24	General-Purpose I/O port	107	131	155	
P1_25	General-Purpose I/O port	110	134	158	
P1_26	General-Purpose I/O port	111	135	160	
P1_27	General-Purpose I/O port	112	136	161	
P1_28	General-Purpose I/O port	113	137	162	

Port Name	Description	Package Pin Number			Remarks
		TEQFP 144	TEQFP 176	TEQFP 208	
P1_29	General-Purpose I/O port	114	138	164	
P1_30	General-Purpose I/O port	115	139	165	
P1_31	General-Purpose I/O port	116	140	166	
P2_00	General-Purpose I/O port	117	141	168	
P2_01	General-Purpose I/O port	120	144	171	
P2_02	General-Purpose I/O port	121	145	173	
P2_03	General-Purpose I/O port	122	146	174	
P2_04	General-Purpose I/O port	123	147	175	
P2_05	General-Purpose I/O port	124	148	177	
P2_06	General-Purpose I/O port	125	149	178	
P2_07	General-Purpose I/O port	126	150	179	
P2_08	General-Purpose I/O port	127	151	181	
P2_09	General-Purpose I/O port	130	158	190	
P2_10	General-Purpose I/O port	134	166	198	
P2_11	General-Purpose I/O port	135	167	199	
P2_12	General-Purpose I/O port	136	168	200	
P2_13	General-Purpose I/O port	137	169	201	
P2_14	General-Purpose I/O port	138	170	202	
P2_15	General-Purpose I/O port	139	171	203	
P2_16	General-Purpose I/O port	140	172	204	
P2_17	General-Purpose I/O port	141	173	205	
P2_18	General-Purpose I/O port	142	174	206	
P2_19	General-Purpose I/O port	143	175	207	
P3_00	General-Purpose I/O port	-	19	25	
P3_01	General-Purpose I/O port	-	20	26	
P3_02	General-Purpose I/O port	-	21	27	
P3_03	General-Purpose I/O port	-	22	28	
P3_04	General-Purpose I/O port	-	23	29	
P3_05	General-Purpose I/O port	-	24	32	
P3_06	General-Purpose I/O port	-	25	33	
P3_07	General-Purpose I/O port	-	29	37	
P3_08	General-Purpose I/O port	-	69	81	
P3_09	General-Purpose I/O port	-	70	82	
P3_10	General-Purpose I/O port	-	71	83	
P3_11	General-Purpose I/O port	-	72	84	
P3_12	General-Purpose I/O port	-	75	87	
P3_13	General-Purpose I/O port	-	76	88	
P3_14	General-Purpose I/O port	-	79	91	
P3_15	General-Purpose I/O port	-	80	92	
P3_16	General-Purpose I/O port	-	98	114	
P3_17	General-Purpose I/O port	-	99	115	
P3_18	General-Purpose I/O port	-	105	122	
P3_19	General-Purpose I/O port	-	106	123	
P3_20	General-Purpose I/O port	-	107	124	
P3_21	General-Purpose I/O port	-	108	125	
P3_22	General-Purpose I/O port	-	109	126	
P3_23	General-Purpose I/O port	-	110	127	
P3_24	General-Purpose I/O port	-	154	186	
P3_25	General-Purpose I/O port	-	155	187	

Port Name	Description	Package Pin Number			Remarks
		TEQFP 144	TEQFP 176	TEQFP 208	
P3_26	General-Purpose I/O port	-	156	188	
P3_27	General-Purpose I/O port	-	157	189	
P3_28	General-Purpose I/O port	-	162	194	
P3_29	General-Purpose I/O port	-	163	195	
P3_30	General-Purpose I/O port	-	164	196	
P3_31	General-Purpose I/O port	-	165	197	
P4_00	General-Purpose I/O port	-	-	6	
P4_01	General-Purpose I/O port	-	-	7	
P4_02	General-Purpose I/O port	-	-	8	
P4_03	General-Purpose I/O port	-	-	15	
P4_04	General-Purpose I/O port	-	-	16	
P4_05	General-Purpose I/O port	-	-	17	
P4_06	General-Purpose I/O port	-	-	30	
P4_07	General-Purpose I/O port	-	-	31	
P4_08	General-Purpose I/O port	-	-	77	
P4_09	General-Purpose I/O port	-	-	78	
P4_10	General-Purpose I/O port	-	-	79	
P4_11	General-Purpose I/O port	-	-	80	
P4_12	General-Purpose I/O port	-	-	96	
P4_13	General-Purpose I/O port	-	-	97	
P4_14	General-Purpose I/O port	-	-	99	
P4_15	General-Purpose I/O port	-	-	100	
P4_16	General-Purpose I/O port	-	-	116	
P4_17	General-Purpose I/O port	-	-	130	
P4_18	General-Purpose I/O port	-	-	131	
P4_19	General-Purpose I/O port	-	-	136	
P4_20	General-Purpose I/O port	-	-	137	
P4_21	General-Purpose I/O port	-	-	138	
P4_22	General-Purpose I/O port	-	-	140	
P4_23	General-Purpose I/O port	-	-	141	
P4_24	General-Purpose I/O port	-	-	159	
P4_25	General-Purpose I/O port	-	-	163	
P4_26	General-Purpose I/O port	-	-	167	
P4_27	General-Purpose I/O port	-	-	172	
P4_28	General-Purpose I/O port	-	-	176	
P4_29	General-Purpose I/O port	-	-	180	
P4_30	General-Purpose I/O port	-	-	184	
P4_31	General-Purpose I/O port	-	-	185	

6.2 Remark

Notes:

- *The port description list shows the port function of description which is mounted and supported on the product. The function which is not described in this table is not supported and assured.*
- *See the function list of the product as well.*

7. Port Configuration

7.1 Resource Input Configuration Module

The resource input configuration module (RIC) is a function to select input from an external or output from another internal resource as resource input. A resource which supports either a port input relocation or a resource inputs from the other resource has its RIC_RESIN register to configure resource input configuration. The Resource which are available through only one port does not have the multiplexer implemented i.e. No RIC_RESIN register.

7.1.1 RIC

Register (Offset)	Resource	RESSEL [3:0] /PORT SEL[3:0]	Source for Resource Input							
			0	1	2	3	4	5	6	7
			8	9	10	11	12	13	14	15
RIC_RESIN000 (0x0000)	SIN16	RESSEL (0-7)	-	-	-	-	-	-	-	-
		RESSEL (8-15)	-	-	-	-	-	-	-	-
		PORTSEL (0-7)	P1_08	P4_19	-	-	-	-	-	-
		PORTSEL (8-15)	-	-	-	-	-	-	-	-
RIC_RESIN001 (0x0002)	SCK16	RESSEL (0-7)	-	-	-	-	-	-	-	-
		RESSEL (8-15)	-	-	-	-	-	-	-	-
		PORTSEL (0-7)	P1_09	P4_21	-	-	-	-	-	-
		PORTSEL (8-15)	-	-	-	-	-	-	-	-
RIC_RESIN002 (0x0004)	SCL16	RESSEL (0-7)	80ns noise filter disable	80ns noise filter enable	-	-	-	-	-	-
		RESSEL (8-15)	-	-	-	-	-	-	-	-
		PORTSEL (0-7)	-	-	-	-	-	-	-	-
		PORTSEL (8-15)	-	-	-	-	-	-	-	-
RIC_RESIN003 (0x0006)	SDA16	RESSEL (0-7)	80ns noise filter disable	80ns noise filter enable	-	-	-	-	-	-
		RESSEL (8-15)	-	-	-	-	-	-	-	-
		PORTSEL (0-7)	-	-	-	-	-	-	-	-
		PORTSEL (8-15)	-	-	-	-	-	-	-	-

Register (Offset)	Resource	RESSEL [3:0] /PORT SEL[3:0]	Source for Resource Input							
			0	1	2	3	4	5	6	7
			8	9	10	11	12	13	14	15
RIC_RESIN004 (0x0008)	MFS16_TRIGGER	RESSEL (0-7)	TOT48	TOT49	-	-	-	-	-	-
		RESSEL (8-15)	-	-	-	-	-	-	-	-
		PORTSEL (0-7)	-	-	-	-	-	-	-	-
		PORTSEL (8-15)	-	-	-	-	-	-	-	-
RIC_RESIN005 (0x000A)	SCS16	RESSEL (0-7)	-	-	-	-	-	-	-	-
		RESSEL (8-15)	-	-	-	-	-	-	-	-
		PORTSEL (0-7)	P1_11	P4_23	-	-	-	-	-	-
		PORTSEL (8-15)	-	-	-	-	-	-	-	-
RIC_RESIN007 (0x000E)	SIN17	RESSEL (0-7)	-	-	-	-	-	-	-	-
		RESSEL (8-15)	-	-	-	-	-	-	-	-
		PORTSEL (0-7)	P1_14	P0_09	-	-	-	-	-	-
		PORTSEL (8-15)	-	-	-	-	-	-	-	-
RIC_RESIN008 (0x0010)	SCK17	RESSEL (0-7)	-	-	-	-	-	-	-	-
		RESSEL (8-15)	-	-	-	-	-	-	-	-
		PORTSEL (0-7)	P1_15	P4_04	-	-	-	-	-	-
		PORTSEL (8-15)	-	-	-	-	-	-	-	-
RIC_RESIN009 (0x0012)	SCL17	RESSEL (0-7)	80ns noise filter disable	80ns noise filter enable	-	-	-	-	-	-
		RESSEL (8-15)	-	-	-	-	-	-	-	-
		PORTSEL (0-7)	-	-	-	-	-	-	-	-
		PORTSEL (8-15)	-	-	-	-	-	-	-	-

Register (Offset)	Resource	RESSEL [3:0] /PORT SEL[3:0]	Source for Resource Input							
			0	1	2	3	4	5	6	7
			8	9	10	11	12	13	14	15
RIC_RESIN010 (0x0014)	SDA17	RESSEL (0-7)	80ns noise filter disable	80ns noise filter enable	-	-	-	-	-	-
		RESSEL (8-15)	-	-	-	-	-	-	-	-
		PORTSEL (0-7)	-	-	-	-	-	-	-	-
		PORTSEL (8-15)	-	-	-	-	-	-	-	-
RIC_RESIN011 (0x0016)	MFS17_TRIGGER	RESSEL (0-7)	TOT48	TOT49	-	-	-	-	-	-
		RESSEL (8-15)	-	-	-	-	-	-	-	-
		PORTSEL (0-7)	-	-	-	-	-	-	-	-
		PORTSEL (8-15)	-	-	-	-	-	-	-	-
RIC_RESIN012 (0x0018)	SCS17	RESSEL (0-7)	-	-	-	-	-	-	-	-
		RESSEL (8-15)	-	-	-	-	-	-	-	-
		PORTSEL (0-7)	P1_17	P4_03	-	-	-	-	-	-
		PORTSEL (8-15)	-	-	-	-	-	-	-	-
RIC_RESIN021 (0x002A)	SIN0	RESSEL (0-7)	-	-	-	-	-	-	-	-
		RESSEL (8-15)	-	-	-	-	-	-	-	-
		PORTSEL (0-7)	P1_03	P0_04	-	-	-	-	-	-
		PORTSEL (8-15)	-	-	-	-	-	-	-	-
RIC_RESIN022 (0x002C)	SCK0	RESSEL (0-7)	-	-	-	-	-	-	-	-
		RESSEL (8-15)	-	-	-	-	-	-	-	-
		PORTSEL (0-7)	P1_04	P0_06	-	-	-	-	-	-
		PORTSEL (8-15)	-	-	-	-	-	-	-	-

Register (Offset)	Resource	RESSEL [3:0] /PORT SEL[3:0]	Source for Resource Input							
			0	1	2	3	4	5	6	7
			8	9	10	11	12	13	14	15
RIC_RESIN023 (0x002E)	SCL0	RESSEL (0-7)	80ns noise filter disable	80ns noise filter enable	-	-	-	-	-	-
		RESSEL (8-15)	-	-	-	-	-	-	-	-
		PORTSEL (0-7)	-	-	-	-	-	-	-	-
		PORTSEL (8-15)	-	-	-	-	-	-	-	-
RIC_RESIN024 (0x0030)	SDA0	RESSEL (0-7)	80ns noise filter disable	80ns noise filter enable	-	-	-	-	-	-
		RESSEL (8-15)	-	-	-	-	-	-	-	-
		PORTSEL (0-7)	-	-	-	-	-	-	-	-
		PORTSEL (8-15)	-	-	-	-	-	-	-	-
RIC_RESIN025 (0x0032)	MFS0_TRIGGER	RESSEL (0-7)	TOT0	TOT1	-	-	-	-	-	-
		RESSEL (8-15)	-	-	-	-	-	-	-	-
		PORTSEL (0-7)	-	-	-	-	-	-	-	-
		PORTSEL (8-15)	-	-	-	-	-	-	-	-
RIC_RESIN026 (0x0034)	SCS0	RESSEL (0-7)	-	-	-	-	-	-	-	-
		RESSEL (8-15)	-	-	-	-	-	-	-	-
		PORTSEL (0-7)	P1_06	P0_07	-	-	-	-	-	-
		PORTSEL (8-15)	-	-	-	-	-	-	-	-
RIC_RESIN028 (0x0038)	SIN1	RESSEL (0-7)	-	-	-	-	-	-	-	-
		RESSEL (8-15)	-	-	-	-	-	-	-	-
		PORTSEL (0-7)	P0_01	P3_00	-	-	-	-	-	-
		PORTSEL (8-15)	-	-	-	-	-	-	-	-

Register (Offset)	Resource	RESSEL [3:0] /PORT SEL[3:0]	Source for Resource Input							
			0	1	2	3	4	5	6	7
			8	9	10	11	12	13	14	15
RIC_RESIN029 (0x003A)	SCK1	RESSEL (0-7)	-	-	-	-	-	-	-	-
		RESSEL (8-15)	-	-	-	-	-	-	-	-
		PORTSEL (0-7)	P0_02	P3_01	-	-	-	-	-	-
		PORTSEL (8-15)	-	-	-	-	-	-	-	-
RIC_RESIN030 (0x003C)	SCL1	RESSEL (0-7)	80ns noise filter disable	80ns noise filter enable	-	-	-	-	-	-
		RESSEL (8-15)	-	-	-	-	-	-	-	-
		PORTSEL (0-7)	-	-	-	-	-	-	-	-
		PORTSEL (8-15)	-	-	-	-	-	-	-	-
RIC_RESIN031 (0x003E)	SDA1	RESSEL (0-7)	80ns noise filter disable	80ns noise filter enable	-	-	-	-	-	-
		RESSEL (8-15)	-	-	-	-	-	-	-	-
		PORTSEL (0-7)	-	-	-	-	-	-	-	-
		PORTSEL (8-15)	-	-	-	-	-	-	-	-
RIC_RESIN032 (0x0040)	MFS1_TRIGGER	RESSEL (0-7)	TOT0	TOT1	-	-	-	-	-	-
		RESSEL (8-15)	-	-	-	-	-	-	-	-
		PORTSEL (0-7)	-	-	-	-	-	-	-	-
		PORTSEL (8-15)	-	-	-	-	-	-	-	-
RIC_RESIN033 (0x0042)	SCS1	RESSEL (0-7)	-	-	-	-	-	-	-	-
		RESSEL (8-15)	-	-	-	-	-	-	-	-
		PORTSEL (0-7)	P0_04	P3_03	-	-	-	-	-	-
		PORTSEL (8-15)	-	-	-	-	-	-	-	-

Register (Offset)	Resource	RESSEL [3:0] /PORT SEL[3:0]	Source for Resource Input							
			0	1	2	3	4	5	6	7
			8	9	10	11	12	13	14	15
RIC_RESIN035 (0x0046)	SIN2	RESSEL (0-7)	-	-	-	-	-	-	-	-
		RESSEL (8-15)	-	-	-	-	-	-	-	-
		PORTSEL (0-7)	P0_21	P4_30	-	-	-	-	-	-
		PORTSEL (8-15)	-	-	-	-	-	-	-	-
RIC_RESIN036 (0x0048)	SCK2	RESSEL (0-7)	-	-	-	-	-	-	-	-
		RESSEL (8-15)	-	-	-	-	-	-	-	-
		PORTSEL (0-7)	P0_22	P4_31	-	-	-	-	-	-
		PORTSEL (8-15)	-	-	-	-	-	-	-	-
RIC_RESIN039 (0x004E)	MFS2_TRIGGER	RESSEL (0-7)	TOT0	TOT1	-	-	-	-	-	-
		RESSEL (8-15)	-	-	-	-	-	-	-	-
		PORTSEL (0-7)	-	-	-	-	-	-	-	-
		PORTSEL (8-15)	-	-	-	-	-	-	-	-
RIC_RESIN040 (0x0050)	SCS2	RESSEL (0-7)	-	-	-	-	-	-	-	-
		RESSEL (8-15)	-	-	-	-	-	-	-	-
		PORTSEL (0-7)	P0_24	P3_25	-	-	-	-	-	-
		PORTSEL (8-15)	-	-	-	-	-	-	-	-

Register (Offset)	Resource	RESSEL [3:0] /PORT SEL[3:0]	Source for Resource Input							
			0	1	2	3	4	5	6	7
			8	9	10	11	12	13	14	15
RIC_RESIN042 (0x0054)	SIN3	RESSEL (0-7)	-	-	-	-	-	-	-	-
		RESSEL (8-15)	-	-	-	-	-	-	-	-
		PORTSEL (0-7)	P0_28	P3_28	-	-	-	-	-	-
		PORTSEL (8-15)	-	-	-	-	-	-	-	-
RIC_RESIN043 (0x0056)	SCK3	RESSEL (0-7)	-	-	-	-	-	-	-	-
		RESSEL (8-15)	-	-	-	-	-	-	-	-
		PORTSEL (0-7)	P0_29	P3_29	-	-	-	-	-	-
		PORTSEL (8-15)	-	-	-	-	-	-	-	-

Register (Offset)	Resource	RESSEL [3:0] /PORT SEL[3:0]	Source for Resource Input							
			0	1	2	3	4	5	6	7
			8	9	10	11	12	13	14	15
RIC_RESIN046 (0x005C)	MFS3_TRIGGER	RESSEL (0-7)	TOT0	TOT1	-	-	-	-	-	-
		RESSEL (8-15)	-	-	-	-	-	-	-	-
		PORTSEL (0-7)	-	-	-	-	-	-	-	-
		PORTSEL (8-15)	-	-	-	-	-	-	-	-
RIC_RESIN047 (0x005E)	SCS3	RESSEL (0-7)	-	-	-	-	-	-	-	-
		RESSEL (8-15)	-	-	-	-	-	-	-	-
		PORTSEL (0-7)	P0_31	P3_31	-	-	-	-	-	-
		PORTSEL (8-15)	-	-	-	-	-	-	-	-
RIC_RESIN049 (0x0062)	SIN4	RESSEL (0-7)	-	-	-	-	-	-	-	-
		RESSEL (8-15)	-	-	-	-	-	-	-	-
		PORTSEL (0-7)	P2_13	P3_05	-	-	-	-	-	-
		PORTSEL (8-15)	-	-	-	-	-	-	-	-
RIC_RESIN050 (0x0064)	SCK4	RESSEL (0-7)	-	-	-	-	-	-	-	-
		RESSEL (8-15)	-	-	-	-	-	-	-	-
		PORTSEL (0-7)	P2_14	P0_14	-	-	-	-	-	-
		PORTSEL (8-15)	-	-	-	-	-	-	-	-
RIC_RESIN051 (0x0066)	SCL4	RESSEL (0-7)	80ns noise filter disable	80ns noise filter enable	-	-	-	-	-	-
		RESSEL (8-15)	-	-	-	-	-	-	-	-
		PORTSEL (0-7)	-	-	-	-	-	-	-	-
		PORTSEL (8-15)	-	-	-	-	-	-	-	-

Register (Offset)	Resource	RESSEL [3:0] /PORT SEL[3:0]	Source for Resource Input							
			0	1	2	3	4	5	6	7
			8	9	10	11	12	13	14	15
RIC_RESIN052 (0x0068)	SDA4	RESSEL (0-7)	80ns noise filter disable	80ns noise filter enable	-	-	-	-	-	-
		RESSEL (8-15)	-	-	-	-	-	-	-	-
		PORTSEL (0-7)	-	-	-	-	-	-	-	-
		PORTSEL (8-15)	-	-	-	-	-	-	-	-
RIC_RESIN053 (0x006A)	MFS4_TRIGGER	RESSEL (0-7)	TOT0	TOT1	-	-	-	-	-	-
		RESSEL (8-15)	-	-	-	-	-	-	-	-
		PORTSEL (0-7)	-	-	-	-	-	-	-	-
		PORTSEL (8-15)	-	-	-	-	-	-	-	-
RIC_RESIN054 (0x006C)	SCS4	RESSEL (0-7)	-	-	-	-	-	-	-	-
		RESSEL (8-15)	-	-	-	-	-	-	-	-
		PORTSEL (0-7)	P2_16	P0_15	-	-	-	-	-	-
		PORTSEL (8-15)	-	-	-	-	-	-	-	-
RIC_RESIN077 (0x009A)	SIN8	RESSEL (0-7)	-	-	-	-	-	-	-	-
		RESSEL (8-15)	-	-	-	-	-	-	-	-
		PORTSEL (0-7)	P1_19	P3_08	P0_27	-	-	-	-	-
		PORTSEL (8-15)	-	-	-	-	-	-	-	-
RIC_RESIN078 (0x009C)	SCK8	RESSEL (0-7)	-	-	-	-	-	-	-	-
		RESSEL (8-15)	-	-	-	-	-	-	-	-
		PORTSEL (0-7)	P1_20	P3_09	P0_28	-	-	-	-	-
		PORTSEL (8-15)	-	-	-	-	-	-	-	-

Register (Offset)	Resource	RESSEL [3:0] /PORT SEL[3:0]	Source for Resource Input							
			0	1	2	3	4	5	6	7
			8	9	10	11	12	13	14	15
RIC_RESIN079 (0x009E)	SCL8	RESSEL (0-7)	80ns noise filter disable	80ns noise filter enable	-	-	-	-	-	-
		RESSEL (8-15)	-	-	-	-	-	-	-	-
		PORTSEL (0-7)	-	-	-	-	-	-	-	-
		PORTSEL (8-15)	-	-	-	-	-	-	-	-
RIC_RESIN080 (0x00A0)	SDA8	RESSEL (0-7)	80ns noise filter disable	80ns noise filter enable	-	-	-	-	-	-
		RESSEL (8-15)	-	-	-	-	-	-	-	-
		PORTSEL (0-7)	-	-	-	-	-	-	-	-
		PORTSEL (8-15)	-	-	-	-	-	-	-	-
RIC_RESIN081 (0x00A2)	MFS8_TRIGGER	RESSEL (0-7)	TOT16	TOT17	-	-	-	-	-	-
		RESSEL (8-15)	-	-	-	-	-	-	-	-
		PORTSEL (0-7)	-	-	-	-	-	-	-	-
		PORTSEL (8-15)	-	-	-	-	-	-	-	-
RIC_RESIN082 (0x00A4)	SCS8	RESSEL (0-7)	-	-	-	-	-	-	-	-
		RESSEL (8-15)	-	-	-	-	-	-	-	-
		PORTSEL (0-7)	P1_22	P3_11	P0_30	-	-	-	-	-
		PORTSEL (8-15)	-	-	-	-	-	-	-	-
RIC_RESIN084 (0x00A8)	SIN9	RESSEL (0-7)	-	-	-	-	-	-	-	-
		RESSEL (8-15)	-	-	-	-	-	-	-	-
		PORTSEL (0-7)	P1_23	P3_18	P0_21	-	-	-	-	-
		PORTSEL (8-15)	-	-	-	-	-	-	-	-

Register (Offset)	Resource	RESSEL [3:0] /PORT SEL[3:0]	Source for Resource Input							
			0	1	2	3	4	5	6	7
			8	9	10	11	12	13	14	15
RIC_RESIN085 (0x00AA)	SCK9	RESSEL (0-7)	-	-	-	-	-	-	-	-
		RESSEL (8-15)	-	-	-	-	-	-	-	-
		PORTSEL (0-7)	P1_24	P3_19	P0_23	-	-	-	-	-
		PORTSEL (8-15)	-	-	-	-	-	-	-	-
RIC_RESIN086 (0x00AC)	SCL9	RESSEL (0-7)	80ns noise filter disable	80ns noise filter enable	-	-	-	-	-	-
		RESSEL (8-15)	-	-	-	-	-	-	-	-
		PORTSEL (0-7)	-	-	-	-	-	-	-	-
		PORTSEL (8-15)	-	-	-	-	-	-	-	-
RIC_RESIN087 (0x00AE)	SDA9	RESSEL (0-7)	80ns noise filter disable	80ns noise filter enable	-	-	-	-	-	-
		RESSEL (8-15)	-	-	-	-	-	-	-	-
		PORTSEL (0-7)	-	-	-	-	-	-	-	-
		PORTSEL (8-15)	-	-	-	-	-	-	-	-
RIC_RESIN088 (0x00B0)	MFS9_TRIGGER	RESSEL (0-7)	TOT16	TOT17	-	-	-	-	-	-
		RESSEL (8-15)	-	-	-	-	-	-	-	-
		PORTSEL (0-7)	-	-	-	-	-	-	-	-
		PORTSEL (8-15)	-	-	-	-	-	-	-	-
RIC_RESIN089 (0x00B2)	SCS9	RESSEL (0-7)	-	-	-	-	-	-	-	-
		RESSEL (8-15)	-	-	-	-	-	-	-	-
		PORTSEL (0-7)	P1_26	P3_21	P0_24	-	-	-	-	-
		PORTSEL (8-15)	-	-	-	-	-	-	-	-

Register (Offset)	Resource	RESSEL [3:0] /PORT SEL[3:0]	Source for Resource Input							
			0	1	2	3	4	5	6	7
			8	9	10	11	12	13	14	15
RIC_RESIN091 (0x00B6)	SIN10	RESSEL (0-7)	-	-	-	-	-	-	-	-
		RESSEL (8-15)	-	-	-	-	-	-	-	-
		PORTSEL (0-7)	P1_28	P3_12	-	-	-	-	-	-
		PORTSEL (8-15)	-	-	-	-	-	-	-	-
RIC_RESIN092 (0x00B8)	SCK10	RESSEL (0-7)	-	-	-	-	-	-	-	-
		RESSEL (8-15)	-	-	-	-	-	-	-	-
		PORTSEL (0-7)	P1_29	P3_13	-	-	-	-	-	-
		PORTSEL (8-15)	-	-	-	-	-	-	-	-
RIC_RESIN093 (0x00BA)	SCL10	RESSEL (0-7)	80ns noise filter disable	80ns noise filter enable	-	-	-	-	-	-
		RESSEL (8-15)	-	-	-	-	-	-	-	-
		PORTSEL (0-7)	-	-	-	-	-	-	-	-
		PORTSEL (8-15)	-	-	-	-	-	-	-	-
RIC_RESIN094 (0x00BC)	SDA10	RESSEL (0-7)	80ns noise filter disable	80ns noise filter enable	-	-	-	-	-	-
		RESSEL (8-15)	-	-	-	-	-	-	-	-
		PORTSEL (0-7)	-	-	-	-	-	-	-	-
		PORTSEL (8-15)	-	-	-	-	-	-	-	-
RIC_RESIN095 (0x00BE)	MFS10_TRIGGER	RESSEL (0-7)	TOT16	TOT17	-	-	-	-	-	-
		RESSEL (8-15)	-	-	-	-	-	-	-	-
		PORTSEL (0-7)	-	-	-	-	-	-	-	-
		PORTSEL (8-15)	-	-	-	-	-	-	-	-

Register (Offset)	Resource	RESSEL [3:0] /PORT SEL[3:0]	Source for Resource Input							
			0	1	2	3	4	5	6	7
			8	9	10	11	12	13	14	15
RIC_RESIN096 (0x00C0)	SCS10	RESSEL (0-7)	-	-	-	-	-	-	-	-
		RESSEL (8-15)	-	-	-	-	-	-	-	-
		PORTSEL (0-7)	P1_31	P3_15	-	-	-	-	-	-
		PORTSEL (8-15)	-	-	-	-	-	-	-	-
RIC_RESIN100 (0x00C8)	SCL11	RESSEL (0-7)	80ns noise filter disable	80ns noise filter enable	-	-	-	-	-	-
		RESSEL (8-15)	-	-	-	-	-	-	-	-
		PORTSEL (0-7)	-	-	-	-	-	-	-	-
		PORTSEL (8-15)	-	-	-	-	-	-	-	-
RIC_RESIN101 (0x00CA)	SDA11	RESSEL (0-7)	80ns noise filter disable	80ns noise filter enable	-	-	-	-	-	-
		RESSEL (8-15)	-	-	-	-	-	-	-	-
		PORTSEL (0-7)	-	-	-	-	-	-	-	-
		PORTSEL (8-15)	-	-	-	-	-	-	-	-
RIC_RESIN102 (0x00CC)	MFS11_TRIGGER	RESSEL (0-7)	TOT16	TOT17	-	-	-	-	-	-
		RESSEL (8-15)	-	-	-	-	-	-	-	-
		PORTSEL (0-7)	-	-	-	-	-	-	-	-
		PORTSEL (8-15)	-	-	-	-	-	-	-	-
RIC_RESIN105 (0x00D2)	SIN12	RESSEL (0-7)	-	-	-	-	-	-	-	-
		RESSEL (8-15)	-	-	-	-	-	-	-	-
		PORTSEL (0-7)	P2_05	P4_18	-	-	-	-	-	-
		PORTSEL (8-15)	-	-	-	-	-	-	-	-

Register (Offset)	Resource	RESSEL [3:0] /PORT SEL[3:0]	Source for Resource Input							
			0	1	2	3	4	5	6	7
			8	9	10	11	12	13	14	15
RIC_RESIN106 (0x00D4)	SCK12	RESSEL (0-7)	-	-	-	-	-	-	-	-
		RESSEL (8-15)	-	-	-	-	-	-	-	-
		PORTSEL (0-7)	P2_06	P1_15	-	-	-	-	-	-
		PORTSEL (8-15)	-	-	-	-	-	-	-	-
RIC_RESIN107 (0x00D6)	SCL12	RESSEL (0-7)	80ns noise filter disable	80ns noise filter enable	-	-	-	-	-	-
		RESSEL (8-15)	-	-	-	-	-	-	-	-
		PORTSEL (0-7)	-	-	-	-	-	-	-	-
		PORTSEL (8-15)	-	-	-	-	-	-	-	-
RIC_RESIN108 (0x00D8)	SDA12	RESSEL (0-7)	80ns noise filter disable	80ns noise filter enable	-	-	-	-	-	-
		RESSEL (8-15)	-	-	-	-	-	-	-	-
		PORTSEL (0-7)	-	-	-	-	-	-	-	-
		PORTSEL (8-15)	-	-	-	-	-	-	-	-
RIC_RESIN109 (0x00DA)	MFS12_TRIGGER	RESSEL (0-7)	TOT16	TOT17	-	-	-	-	-	-
		RESSEL (8-15)	-	-	-	-	-	-	-	-
		PORTSEL (0-7)	-	-	-	-	-	-	-	-
		PORTSEL (8-15)	-	-	-	-	-	-	-	-
RIC_RESIN110 (0x00DC)	SCS12	RESSEL (0-7)	-	-	-	-	-	-	-	-
		RESSEL (8-15)	-	-	-	-	-	-	-	-
		PORTSEL (0-7)	P2_08	P3_23	-	-	-	-	-	-
		PORTSEL (8-15)	-	-	-	-	-	-	-	-

Register (Offset)	Resource	RESSEL [3:0] /PORT SEL[3:0]	Source for Resource Input							
			0	1	2	3	4	5	6	7
			8	9	10	11	12	13	14	15
RIC_RESIN133 (0x010A)	RX5	RESSEL (0-7)	PORT_PIN	MCAN5_PIN_AND_TX	-	-	-	-	-	-
		RESSEL (8-15)	-	-	-	-	-	-	-	-
		PORTSEL (0-7)	P1_17	P3_19	-	-	-	-	-	-
		PORTSEL (8-15)	-	-	-	-	-	-	-	-
RIC_RESIN134 (0x010C)	RX6	RESSEL (0-7)	PORT_PIN	MCAN6_PIN_AND_TX	-	-	-	-	-	-
		RESSEL (8-15)	-	-	-	-	-	-	-	-
		PORTSEL (0-7)	P1_21	P3_22	-	-	-	-	-	-
		PORTSEL (8-15)	-	-	-	-	-	-	-	-
RIC_RESIN135 (0x010E)	RX7	RESSEL (0-7)	PORT_PIN	MCAN7_PIN_AND_TX	-	-	-	-	-	-
		RESSEL (8-15)	-	-	-	-	-	-	-	-
		PORTSEL (0-7)	P4_22	P2_18	-	-	-	-	-	-
		PORTSEL (8-15)	-	-	-	-	-	-	-	-
RIC_RESIN136 (0x0110)	RX0	RESSEL (0-7)	PORT_PIN	MCAN0_PIN_AND_TX	-	-	-	-	-	-
		RESSEL (8-15)	-	-	-	-	-	-	-	-
		PORTSEL (0-7)	P1_05	P3_09	P4_00	-	-	-	-	-
		PORTSEL (8-15)	-	-	-	-	-	-	-	-
RIC_RESIN137 (0x0112)	RX1	RESSEL (0-7)	PORT_PIN	MCAN1_PIN_AND_TX	-	-	-	-	-	-
		RESSEL (8-15)	-	-	-	-	-	-	-	-
		PORTSEL (0-7)	P1_07	P3_11	-	-	-	-	-	-
		PORTSEL (8-15)	-	-	-	-	-	-	-	-

Register (Offset)	Resource	RESSEL [3:0] /PORT SEL[3:0]	Source for Resource Input							
			0	1	2	3	4	5	6	7
			8	9	10	11	12	13	14	15
RIC_RESIN138 (0x0114)	RX2	RESSEL (0-7)	PORT_PIN	MCAN2_PIN_AND_TX	-	-	-	-	-	-
		RESSEL (8-15)	-	-	-	-	-	-	-	-
		PORTSEL (0-7)	P1_11	P3_14	-	-	-	-	-	-
		PORTSEL (8-15)	-	-	-	-	-	-	-	-
RIC_RESIN139 (0x0116)	RX3	RESSEL (0-7)	PORT_PIN	MCAN3_PIN_AND_TX	-	-	-	-	-	-
		RESSEL (8-15)	-	-	-	-	-	-	-	-
		PORTSEL (0-7)	P1_13	P3_16	P4_03	-	-	-	-	-
		PORTSEL (8-15)	-	-	-	-	-	-	-	-
RIC_RESIN140 (0x0118)	RX4	RESSEL (0-7)	PORT_PIN	MCAN4_PIN_AND_TX	-	-	-	-	-	-
		RESSEL (8-15)	-	-	-	-	-	-	-	-
		PORTSEL (0-7)	-	-	-	-	-	-	-	-
		PORTSEL (8-15)	-	-	-	-	-	-	-	-

Register (Offset)	Resource	RESSEL [3:0] /PORT SEL[3:0]	Source for Resource Input							
			0	1	2	3	4	5	6	7
			8	9	10	11	12	13	14	15
RIC_RESIN141 (0x011A)	TIN48	RESSEL (0-7)	PORT_PIN	TOT49	RLT49_UFSET	-	-	-	-	-
		RESSEL (8-15)	-	-	-	-	-	-	-	-
		PORTSEL (0-7)	P1_13	P3_16	-	-	-	-	-	-
		PORTSEL (8-15)	-	-	-	-	-	-	-	-
RIC_RESIN142 (0x011C)	TIN49	RESSEL (0-7)	PORT_PIN	TOT48	RLT48_UFSET	-	-	-	-	-
		RESSEL (8-15)	-	-	-	-	-	-	-	-
		PORTSEL (0-7)	P1_15	P3_20	-	-	-	-	-	-
		PORTSEL (8-15)	-	-	-	-	-	-	-	-
RIC_RESIN144 (0x0120)	TIN0	RESSEL (0-7)	PORT_PIN	TOT1	RLT1_UFSET	-	PPG0_TOUT0	-	-	-
		RESSEL (8-15)	-	-	-	-	-	-	-	-
		PORTSEL (0-7)	P1_03	P3_08	-	-	-	-	-	-
		PORTSEL (8-15)	-	-	-	-	-	-	-	-
RIC_RESIN145 (0x0122)	TIN1	RESSEL (0-7)	PORT_PIN	TOT0	RLT0_UFSET	-	PPG1_TOUT0	-	-	-
		RESSEL (8-15)	-	-	-	-	-	-	-	-
		PORTSEL (0-7)	P1_05	P3_10	-	-	-	-	-	-
		PORTSEL (8-15)	-	-	-	-	-	-	-	-

Register (Offset)	Resource	RESSEL [3:0] /PORT SEL[3:0]	Source for Resource Input							
			0	1	2	3	4	5	6	7
			8	9	10	11	12	13	14	15
RIC_RESIN160 (0x0140)	TIN16	RESSEL (0-7)	PORT_PIN	TOT17	RLT17_UFSET	-	PPG6_TOUT0	-	-	-
		RESSEL (8-15)	-	-	-	-	-	-	-	-
		PORTSEL (0-7)	P1_07	P3_12	-	-	-	-	-	-
		PORTSEL (8-15)	-	-	-	-	-	-	-	-
RIC_RESIN161 (0x0142)	TIN17	RESSEL (0-7)	PORT_PIN	TOT16	RLT16_UFSET	-	PPG7_TOUT0	-	-	-
		RESSEL (8-15)	-	-	-	-	-	-	-	-
		PORTSEL (0-7)	P1_11	P3_14	-	-	-	-	-	-
		PORTSEL (8-15)	-	-	-	-	-	-	-	-

Register (Offset)	Resource	RESSEL [3:0] /PORT SEL[3:0]	Source for Resource Input							
			0	1	2	3	4	5	6	7
			8	9	10	11	12	13	14	15
RIC_RESIN192 (0x0180)	EINT0	RESSEL (0-7)	-	-	-	-	-	-	-	-
		RESSEL (8-15)	-	-	-	-	-	-	-	-
		PORTSEL (0-7)	P2_13	P0_00	P0_08	P0_20	P3_17	P2_01	P2_16	-
		PORTSEL (8-15)	-	-	-	-	-	-	-	-
RIC_RESIN193 (0x0182)	EINT1	RESSEL (0-7)	-	-	-	-	-	-	-	-
		RESSEL (8-15)	-	-	-	-	-	-	-	-
		PORTSEL (0-7)	P0_01	P3_00	P0_09	P0_22	P4_16	P4_27	P2_17	-
		PORTSEL (8-15)	-	-	-	-	-	-	-	-
RIC_RESIN194 (0x0184)	EINT2	RESSEL (0-7)	-	-	-	-	-	-	-	-
		RESSEL (8-15)	-	-	-	-	-	-	-	-
		PORTSEL (0-7)	P0_21	P4_30	P4_03	P0_23	P3_20	P2_02	P2_18	-
		PORTSEL (8-15)	-	-	-	-	-	-	-	-
RIC_RESIN195 (0x0186)	EINT3	RESSEL (0-7)	-	-	-	-	-	-	-	-
		RESSEL (8-15)	-	-	-	-	-	-	-	-
		PORTSEL (0-7)	P0_28	P3_28	P4_04	P0_24	P3_21	P2_03	P2_19	-
		PORTSEL (8-15)	-	-	-	-	-	-	-	-
RIC_RESIN196 (0x0188)	EINT4	RESSEL (0-7)	-	-	-	-	-	-	-	-
		RESSEL (8-15)	-	-	-	-	-	-	-	-
		PORTSEL (0-7)	P1_03	P0_02	P4_05	P0_25	P3_23	P2_04	-	-
		PORTSEL (8-15)	-	-	-	-	-	-	-	-

Register (Offset)	Resource	RESSEL [3:0] /PORT SEL[3:0]	Source for Resource Input							
			0	1	2	3	4	5	6	7
			8	9	10	11	12	13	14	15
RIC_RESIN197 (0x018A)	EINT5	RESSEL (0-7)	-	-	-	-	-	-	-	-
		RESSEL (8-15)	-	-	-	-	-	-	-	-
		PORTSEL (0-7)	P1_04	P0_03	P0_10	P0_26	P4_17	P4_28	-	-
		PORTSEL (8-15)	-	-	-	-	-	-	-	-
RIC_RESIN198 (0x018C)	EINT6	RESSEL (0-7)	-	-	-	-	-	-	-	-
		RESSEL (8-15)	-	-	-	-	-	-	-	-
		PORTSEL (0-7)	P1_05	P3_09	P0_11	P0_27	P4_18	P2_06	-	-
		PORTSEL (8-15)	-	-	-	-	-	-	-	-
RIC_RESIN199 (0x018E)	EINT7	RESSEL (0-7)	-	-	-	-	-	-	-	-
		RESSEL (8-15)	-	-	-	-	-	-	-	-
		PORTSEL (0-7)	P1_06	P4_00	P0_12	P0_29	P4_20	P2_07	-	-
		PORTSEL (8-15)	-	-	-	-	-	-	-	-
RIC_RESIN200 (0x0190)	EINT8	RESSEL (0-7)	-	-	-	-	-	-	-	-
		RESSEL (8-15)	-	-	-	-	-	-	-	-
		PORTSEL (0-7)	P1_07	P3_11	P0_13	P0_30	P4_21	P4_29	-	-
		PORTSEL (8-15)	-	-	-	-	-	-	-	-
RIC_RESIN201 (0x0192)	EINT9	RESSEL (0-7)	-	-	-	-	-	-	-	-
		RESSEL (8-15)	-	-	-	-	-	-	-	-
		PORTSEL (0-7)	P1_08	P4_01	P3_01	P0_31	P1_16	P2_08	-	-
		PORTSEL (8-15)	-	-	-	-	-	-	-	-

Register (Offset)	Resource	RESSEL [3:0] /PORT SEL[3:0]	Source for Resource Input							
			0	1	2	3	4	5	6	7
			8	9	10	11	12	13	14	15
RIC_RESIN202 (0x0194)	EINT10	RESSEL (0-7)	-	-	-	-	-	-	-	-
		RESSEL (8-15)	-	-	-	-	-	-	-	-
		PORTSEL (0-7)	P1_09	P4_02	P3_02	P1_00	P4_23	P4_31	-	-
		PORTSEL (8-15)	-	-	-	-	-	-	-	-
RIC_RESIN203 (0x0196)	EINT11	RESSEL (0-7)	-	-	-	-	-	-	-	-
		RESSEL (8-15)	-	-	-	-	-	-	-	-
		PORTSEL (0-7)	P1_10	P0_04	P3_03	P1_01	P1_18	P3_24	-	-
		PORTSEL (8-15)	-	-	-	-	-	-	-	-
RIC_RESIN204 (0x0198)	EINT12	RESSEL (0-7)	-	-	-	-	-	-	-	-
		RESSEL (8-15)	-	-	-	-	-	-	-	-
		PORTSEL (0-7)	P1_11	P3_14	P3_04	P1_02	P1_20	P3_25	-	-
		PORTSEL (8-15)	-	-	-	-	-	-	-	-
RIC_RESIN205 (0x019A)	EINT13	RESSEL (0-7)	-	-	-	-	-	-	-	-
		RESSEL (8-15)	-	-	-	-	-	-	-	-
		PORTSEL (0-7)	P1_12	P0_05	P4_06	P4_08	P1_22	P3_26	-	-
		PORTSEL (8-15)	-	-	-	-	-	-	-	-
RIC_RESIN206 (0x019C)	EINT14	RESSEL (0-7)	-	-	-	-	-	-	-	-
		RESSEL (8-15)	-	-	-	-	-	-	-	-
		PORTSEL (0-7)	P1_13	P3_16	P4_07	P4_09	P1_24	P3_27	-	-
		PORTSEL (8-15)	-	-	-	-	-	-	-	-

Register (Offset)	Resource	RESSEL [3:0] /PORT SEL[3:0]	Source for Resource Input							
			0	1	2	3	4	5	6	7
			8	9	10	11	12	13	14	15
RIC_RESIN207 (0x019E)	EINT15	RESSEL (0-7)	-	-	-	-	-	-	-	-
		RESSEL (8-15)	-	-	-	-	-	-	-	-
		PORTSEL (0-7)	P1_14	P0_06	P3_05	P4_10	P1_25	P2_09	-	-
		PORTSEL (8-15)	-	-	-	-	-	-	-	-
RIC_RESIN208 (0x01A0)	EINT16	RESSEL (0-7)	-	-	-	-	-	-	-	-
		RESSEL (8-15)	-	-	-	-	-	-	-	-
		PORTSEL (0-7)	P1_15	P4_19	P3_06	P4_11	P4_24	P3_29	-	-
		PORTSEL (8-15)	-	-	-	-	-	-	-	-
RIC_RESIN209 (0x01A2)	EINT17	RESSEL (0-7)	-	-	-	-	-	-	-	-
		RESSEL (8-15)	-	-	-	-	-	-	-	-
		PORTSEL (0-7)	P1_17	P3_19	P0_14	P3_10	P1_26	P3_30	-	-
		PORTSEL (8-15)	-	-	-	-	-	-	-	-
RIC_RESIN210 (0x01A4)	EINT18	RESSEL (0-7)	-	-	-	-	-	-	-	-
		RESSEL (8-15)	-	-	-	-	-	-	-	-
		PORTSEL (0-7)	P1_19	P3_08	P0_15	P3_13	P1_27	P3_31	-	-
		PORTSEL (8-15)	-	-	-	-	-	-	-	-
RIC_RESIN211 (0x01A6)	EINT19	RESSEL (0-7)	-	-	-	-	-	-	-	-
		RESSEL (8-15)	-	-	-	-	-	-	-	-
		PORTSEL (0-7)	P1_21	P3_22	P0_16	P3_15	P4_25	P2_10	-	-
		PORTSEL (8-15)	-	-	-	-	-	-	-	-

Register (Offset)	Resource	RESSEL [3:0] /PORT SEL[3:0]	Source for Resource Input							
			0	1	2	3	4	5	6	7
			8	9	10	11	12	13	14	15
RIC_RESIN212 (0x01A8)	EINT20	RESSEL (0-7)	-	-	-	-	-	-	-	-
		RESSEL (8-15)	-	-	-	-	-	-	-	-
		PORTSEL (0-7)	P1_23	P3_18	P3_07	P4_12	P1_29	P2_11	-	-
		PORTSEL (8-15)	-	-	-	-	-	-	-	-
RIC_RESIN213 (0x01AA)	EINT21	RESSEL (0-7)	-	-	-	-	-	-	-	-
		RESSEL (8-15)	-	-	-	-	-	-	-	-
		PORTSEL (0-7)	P1_28	P3_12	P0_17	P4_13	P1_30	P2_12	-	-
		PORTSEL (8-15)	-	-	-	-	-	-	-	-
RIC_RESIN214 (0x01AC)	EINT22	RESSEL (0-7)	-	-	-	-	-	-	-	-
		RESSEL (8-15)	-	-	-	-	-	-	-	-
		PORTSEL (0-7)	P2_00	P4_22	P0_18	P4_14	P1_31	P2_14	-	-
		PORTSEL (8-15)	-	-	-	-	-	-	-	-
RIC_RESIN215 (0x01AE)	EINT23	RESSEL (0-7)	-	-	-	-	-	-	-	-
		RESSEL (8-15)	-	-	-	-	-	-	-	-
		PORTSEL (0-7)	P2_05	P0_07	P0_19	P4_15	P4_26	P2_15	-	-
		PORTSEL (8-15)	-	-	-	-	-	-	-	-

Register (Offset)	Resource	RESSEL [3:0] /PORT SEL[3:0]	Source for Resource Input							
			0	1	2	3	4	5	6	7
			8	9	10	11	12	13	14	15
RIC_RESIN216 (0x01B0)	TEXT0	RESSEL (0-7)	PORT_PIN	TOT0	TOT1	PPG0_TOUT2	-	-	-	-
		RESSEL (8-15)	-	-	-	-	-	-	-	-
		PORTSEL (0-7)	-	-	-	-	-	-	-	-
		PORTSEL (8-15)	-	-	-	-	-	-	-	-
RIC_RESIN217 (0x01B2)	TEXT1	RESSEL (0-7)	PORT_PIN	TOT0	TOT1	PPG1_TOUT2	-	-	-	-
		RESSEL (8-15)	-	-	-	-	-	-	-	-
		PORTSEL (0-7)	-	-	-	-	-	-	-	-
		PORTSEL (8-15)	-	-	-	-	-	-	-	-
RIC_RESIN218 (0x01B4)	TEXT2	RESSEL (0-7)	PORT_PIN	TOT0	TOT1	PPG2_TOUT2	-	-	-	-
		RESSEL (8-15)	-	-	-	-	-	-	-	-
		PORTSEL (0-7)	-	-	-	-	-	-	-	-
		PORTSEL (8-15)	-	-	-	-	-	-	-	-
RIC_RESIN219 (0x01B6)	TEXT3	RESSEL (0-7)	PORT_PIN	TOT0	TOT1	PPG3_TOUT2	-	-	-	-
		RESSEL (8-15)	-	-	-	-	-	-	-	-
		PORTSEL (0-7)	-	-	-	-	-	-	-	-
		PORTSEL (8-15)	-	-	-	-	-	-	-	-

Register (Offset)	Resource	RESSEL [3:0] /PORT SEL[3:0]	Source for Resource Input							
			0	1	2	3	4	5	6	7
			8	9	10	11	12	13	14	15
RIC_RESIN220 (0x01B8)	TEXT4	RESSEL (0-7)	PORT_PIN	TOT0	TOT1	PPG4_TOUT2	-	-	-	-
		RESSEL (8-15)	-	-	-	-	-	-	-	-
		PORTSEL (0-7)	-	-	-	-	-	-	-	-
		PORTSEL (8-15)	-	-	-	-	-	-	-	-
RIC_RESIN224 (0x01C0)	TEXT8	RESSEL (0-7)	PORT_PIN	RLT0_UFSET	RLT16_UFSET	PPG6_TOUT2	-	-	-	-
		RESSEL (8-15)	-	-	-	-	-	-	-	-
		PORTSEL (0-7)	-	-	-	-	-	-	-	-
		PORTSEL (8-15)	-	-	-	-	-	-	-	-
RIC_RESIN225 (0x01C2)	TEXT9	RESSEL (0-7)	PORT_PIN	RLT0_UFSET	RLT16_UFSET	PPG7_TOUT2	-	-	-	-
		RESSEL (8-15)	-	-	-	-	-	-	-	-
		PORTSEL (0-7)	-	-	-	-	-	-	-	-
		PORTSEL (8-15)	-	-	-	-	-	-	-	-
RIC_RESIN226 (0x01C4)	TEXT10	RESSEL (0-7)	PORT_PIN	RLT0_UFSET	RLT16_UFSET	PPG8_TOUT2	-	-	-	-
		RESSEL (8-15)	-	-	-	-	-	-	-	-
		PORTSEL (0-7)	-	-	-	-	-	-	-	-
		PORTSEL (8-15)	-	-	-	-	-	-	-	-

Register (Offset)	Resource	RESSEL [3:0] /PORT SEL[3:0]	Source for Resource Input							
			0	1	2	3	4	5	6	7
			8	9	10	11	12	13	14	15
IN232 (0x01D0)	OCU0_CK0	RESSEL (0-7)	FRT0	FRT1	FRT2	FRT3	FRT4	-	-	-
		RESSEL (8-15)	-	-	-	-	-	-	-	-
		PORTSEL (0-7)	-	-	-	-	-	-	-	-
		PORTSEL (8-15)	-	-	-	-	-	-	-	-
	OCU0_CK1	RESSEL (0-7)	FRT0	FRT1	FRT2	FRT3	FRT4	-	-	-
		RESSEL (8-15)	-	-	-	-	-	-	-	-
		PORTSEL (0-7)	-	-	-	-	-	-	-	-
		PORTSEL (8-15)	-	-	-	-	-	-	-	-
	OCU0_DOWNB0	RESSEL (0-7)	FRT0_DOWNB	FRT1_DOWNB	FRT2_DOWNB	FRT3_DOWNB	FRT4_DOWNB	-	-	-
		RESSEL (8-15)	-	-	-	-	-	-	-	-
		PORTSEL (0-7)	-	-	-	-	-	-	-	-
		PORTSEL (8-15)	-	-	-	-	-	-	-	-
	OCU0_DOWNB1	RESSEL (0-7)	FRT0_DOWNB	FRT1_DOWNB	FRT2_DOWNB	FRT3_DOWNB	FRT4_DOWNB	-	-	-
		RESSEL (8-15)	-	-	-	-	-	-	-	-
		PORTSEL (0-7)	-	-	-	-	-	-	-	-
		PORTSEL (8-15)	-	-	-	-	-	-	-	-
	OCU0_FCMD0	RESSEL (0-7)	FRT0_FCMD	FRT1_FCMD	FRT2_FCMD	FRT3_FCMD	FRT4_FCMD	-	-	-
		RESSEL (8-15)	-	-	-	-	-	-	-	-
		PORTSEL (0-7)	-	-	-	-	-	-	-	-
		PORTSEL (8-15)	-	-	-	-	-	-	-	-

Register (Offset)	Resource	RESSEL [3:0] /PORT SEL[3:0]	Source for Resource Input							
			0	1	2	3	4	5	6	7
			8	9	10	11	12	13	14	15
IN232 (0x01D0)	OCU0_FCMD1	RESSEL (0-7)	FRT0_FCMD	FRT1_FCMD	FRT2_FCMD	FRT3_FCMD	FRT4_FCMD	-	-	-
		RESSEL (8-15)	-	-	-	-	-	-	-	-
		PORTSEL (0-7)	-	-	-	-	-	-	-	-
		PORTSEL (8-15)	-	-	-	-	-	-	-	-
	OCU0_MTSF0	RESSEL (0-7)	FRT0_MTSF	FRT1_MTSF	FRT2_MTSF	FRT3_MTSF	FRT4_MTSF	-	-	-
		RESSEL (8-15)	-	-	-	-	-	-	-	-
		PORTSEL (0-7)	-	-	-	-	-	-	-	-
		PORTSEL (8-15)	-	-	-	-	-	-	-	-
	OCU0_MTSF1	RESSEL (0-7)	FRT0_MTSF	FRT1_MTSF	FRT2_MTSF	FRT3_MTSF	FRT4_MTSF	-	-	-
		RESSEL (8-15)	-	-	-	-	-	-	-	-
		PORTSEL (0-7)	-	-	-	-	-	-	-	-
		PORTSEL (8-15)	-	-	-	-	-	-	-	-
	OCU0_T0[31:0]	RESSEL (0-7)	FRT0_T[31:0]	FRT1_T[31:0]	FRT2_T[31:0]	FRT3_T[31:0]	FRT4_T[31:0]	-	-	-
		RESSEL (8-15)	-	-	-	-	-	-	-	-
		PORTSEL (0-7)	-	-	-	-	-	-	-	-
		PORTSEL (8-15)	-	-	-	-	-	-	-	-
	OCU0_T1[31:0]	RESSEL (0-7)	FRT0_T[31:0]	FRT1_T[31:0]	FRT2_T[31:0]	FRT3_T[31:0]	FRT4_T[31:0]	-	-	-
		RESSEL (8-15)	-	-	-	-	-	-	-	-
		PORTSEL (0-7)	-	-	-	-	-	-	-	-
		PORTSEL (8-15)	-	-	-	-	-	-	-	-

Register (Offset)	Resource	RESSEL [3:0] /PORT SEL[3:0]	Source for Resource Input							
			0	1	2	3	4	5	6	7
			8	9	10	11	12	13	14	15
IN232 (0x01D0)	OCU0_ZTSF0	RESSEL (0-7)	FRT0_ZTSF	FRT1_ZTSF	FRT2_ZTSF	FRT3_ZTSF	FRT4_ZTSF	-	-	-
		RESSEL (8-15)	-	-	-	-	-	-	-	-
		PORTSEL (0-7)	-	-	-	-	-	-	-	-
		PORTSEL (8-15)	-	-	-	-	-	-	-	-
	OCU0_ZTSF1	RESSEL (0-7)	FRT0_ZTSF	FRT1_ZTSF	FRT2_ZTSF	FRT3_ZTSF	FRT4_ZTSF	-	-	-
		RESSEL (8-15)	-	-	-	-	-	-	-	-
		PORTSEL (0-7)	-	-	-	-	-	-	-	-
		PORTSEL (8-15)	-	-	-	-	-	-	-	-
RIC_RESIN233 (0x01D2)	OCU0_MOD0	RESSEL (0-7)	set 1	set 0	-	-	-	-	-	-
		RESSEL (8-15)	-	-	-	-	-	-	-	-
		PORTSEL (0-7)	-	-	-	-	-	-	-	-
		PORTSEL (8-15)	-	-	-	-	-	-	-	-
RIC_RESIN234 (0x01D4)	OCU0_MOD1	RESSEL (0-7)	set 1	set 0	-	-	-	-	-	-
		RESSEL (8-15)	-	-	-	-	-	-	-	-
		PORTSEL (0-7)	-	-	-	-	-	-	-	-
		PORTSEL (8-15)	-	-	-	-	-	-	-	-
RIC_RESIN235 (0x01D6)	OCU1_CK0	RESSEL (0-7)	FRT0	FRT1	FRT2	FRT3	FRT4	-	-	-
		RESSEL (8-15)	-	-	-	-	-	-	-	-
		PORTSEL (0-7)	-	-	-	-	-	-	-	-
		PORTSEL (8-15)	-	-	-	-	-	-	-	-

Register (Offset)	Resource	RESSEL [3:0] /PORT SEL[3:0]	Source for Resource Input							
			0	1	2	3	4	5	6	7
			8	9	10	11	12	13	14	15
RIC_RESIN235 (0x01D6)	OCU1_CK1	RESSEL (0-7)	FRT0	FRT1	FRT2	FRT3	FRT4	-	-	-
		RESSEL (8-15)	-	-	-	-	-	-	-	-
		PORTSEL (0-7)	-	-	-	-	-	-	-	-
		PORTSEL (8-15)	-	-	-	-	-	-	-	-
	OCU1_DOWNB0	RESSEL (0-7)	FRT0_DOWNB	FRT1_DOWNB	FRT2_DOWNB	FRT3_DOWNB	FRT4_DOWNB	-	-	-
		RESSEL (8-15)	-	-	-	-	-	-	-	-
		PORTSEL (0-7)	-	-	-	-	-	-	-	-
		PORTSEL (8-15)	-	-	-	-	-	-	-	-
	OCU1_DOWNB1	RESSEL (0-7)	FRT0_DOWNB	FRT1_DOWNB	FRT2_DOWNB	FRT3_DOWNB	FRT4_DOWNB	-	-	-
		RESSEL (8-15)	-	-	-	-	-	-	-	-
		PORTSEL (0-7)	-	-	-	-	-	-	-	-
		PORTSEL (8-15)	-	-	-	-	-	-	-	-
	OCU1_FCMD0	RESSEL (0-7)	FRT0_FCMD	FRT1_FCMD	FRT2_FCMD	FRT3_FCMD	FRT4_FCMD	-	-	-
		RESSEL (8-15)	-	-	-	-	-	-	-	-
		PORTSEL (0-7)	-	-	-	-	-	-	-	-
		PORTSEL (8-15)	-	-	-	-	-	-	-	-
	OCU1_FCMD1	RESSEL (0-7)	FRT0_FCMD	FRT1_FCMD	FRT2_FCMD	FRT3_FCMD	FRT4_FCMD	-	-	-
		RESSEL (8-15)	-	-	-	-	-	-	-	-
		PORTSEL (0-7)	-	-	-	-	-	-	-	-
		PORTSEL (8-15)	-	-	-	-	-	-	-	-

Register (Offset)	Resource	RESSEL [3:0] /PORT SEL[3:0]	Source for Resource Input							
			0	1	2	3	4	5	6	7
			8	9	10	11	12	13	14	15
RIC_RESIN235 (0x01D6)	OCU1_MTSF0	RESSEL (0-7)	FRT0_MTSF	FRT1_MTSF	FRT2_MTSF	FRT3_MTSF	FRT4_MTSF	-	-	-
		RESSEL (8-15)	-	-	-	-	-	-	-	-
		PORTSEL (0-7)	-	-	-	-	-	-	-	-
		PORTSEL (8-15)	-	-	-	-	-	-	-	-
	OCU1_MTSF1	RESSEL (0-7)	FRT0_MTSF	FRT1_MTSF	FRT2_MTSF	FRT3_MTSF	FRT4_MTSF	-	-	-
		RESSEL (8-15)	-	-	-	-	-	-	-	-
		PORTSEL (0-7)	-	-	-	-	-	-	-	-
		PORTSEL (8-15)	-	-	-	-	-	-	-	-
	OCU1_T0[31:0]	RESSEL (0-7)	FRT0_T[31:0]	FRT1_T[31:0]	FRT2_T[31:0]	FRT3_T[31:0]	FRT4_T[31:0]	-	-	-
		RESSEL (8-15)	-	-	-	-	-	-	-	-
		PORTSEL (0-7)	-	-	-	-	-	-	-	-
		PORTSEL (8-15)	-	-	-	-	-	-	-	-
	OCU1_T1[31:0]	RESSEL (0-7)	FRT0_T[31:0]	FRT1_T[31:0]	FRT2_T[31:0]	FRT3_T[31:0]	FRT4_T[31:0]	-	-	-
		RESSEL (8-15)	-	-	-	-	-	-	-	-
		PORTSEL (0-7)	-	-	-	-	-	-	-	-
		PORTSEL (8-15)	-	-	-	-	-	-	-	-

Register (Offset)	Resource	RESSEL [3:0] /PORT SEL[3:0]	Source for Resource Input							
			0	1	2	3	4	5	6	7
			8	9	10	11	12	13	14	15
RIC_RESIN235 (0x01D6)	OCU1_ZTSF0	RESSEL (0-7)	FRT0_ZTSF	FRT1_ZTSF	FRT2_ZTSF	FRT3_ZTSF	FRT4_ZTSF	-	-	-
		RESSEL (8-15)	-	-	-	-	-	-	-	-
		PORTSEL (0-7)	-	-	-	-	-	-	-	-
		PORTSEL (8-15)	-	-	-	-	-	-	-	-
	OCU1_ZTSF1	RESSEL (0-7)	FRT0_ZTSF	FRT1_ZTSF	FRT2_ZTSF	FRT3_ZTSF	FRT4_ZTSF	-	-	-
		RESSEL (8-15)	-	-	-	-	-	-	-	-
		PORTSEL (0-7)	-	-	-	-	-	-	-	-
		PORTSEL (8-15)	-	-	-	-	-	-	-	-
RIC_RESIN236 (0x01D8)	OCU1_MOD0	RESSEL (0-7)	set 1	set 0	-	-	-	-	-	-
		RESSEL (8-15)	-	-	-	-	-	-	-	-
		PORTSEL (0-7)	-	-	-	-	-	-	-	-
		PORTSEL (8-15)	-	-	-	-	-	-	-	-
RIC_RESIN237 (0x01DA)	OCU1_MOD1	RESSEL (0-7)	set 1	set 0	-	-	-	-	-	-
		RESSEL (8-15)	-	-	-	-	-	-	-	-
		PORTSEL (0-7)	-	-	-	-	-	-	-	-
		PORTSEL (8-15)	-	-	-	-	-	-	-	-

Register (Offset)	Resource	RESSEL [3:0] /PORT SEL[3:0]	Source for Resource Input							
			0	1	2	3	4	5	6	7
			8	9	10	11	12	13	14	15
RIC_RESIN238 (0x01DC)	OCU2_CK0	RESSEL (0-7)	FRT0	FRT1	FRT2	FRT3	FRT4	-	-	-
		RESSEL (8-15)	-	-	-	-	-	-	-	-
		PORTSEL (0-7)	-	-	-	-	-	-	-	-
		PORTSEL (8-15)	-	-	-	-	-	-	-	-
	OCU2_CK1	RESSEL (0-7)	FRT0	FRT1	FRT2	FRT3	FRT4	-	-	-
		RESSEL (8-15)	-	-	-	-	-	-	-	-
		PORTSEL (0-7)	-	-	-	-	-	-	-	-
		PORTSEL (8-15)	-	-	-	-	-	-	-	-
	OCU2_DOWNB0	RESSEL (0-7)	FRT0_DOWNB	FRT1_DOWNB	FRT2_DOWNB	FRT3_DOWNB	FRT4_DOWNB	-	-	-
		RESSEL (8-15)	-	-	-	-	-	-	-	-
		PORTSEL (0-7)	-	-	-	-	-	-	-	-
		PORTSEL (8-15)	-	-	-	-	-	-	-	-

Register (Offset)	Resource	RESSEL [3:0] /PORT SEL[3:0]	Source for Resource Input							
			0	1	2	3	4	5	6	7
			8	9	10	11	12	13	14	15
RIC_RESIN238 (0x01DC)	OCU2_DOWNB1	RESSEL (0-7)	FRT0_DOWNB	FRT1_DOWNB	FRT2_DOWNB	FRT3_DOWNB	FRT4_DOWNB	-	-	-
		RESSEL (8-15)	-	-	-	-	-	-	-	-
		PORTSEL (0-7)	-	-	-	-	-	-	-	-
		PORTSEL (8-15)	-	-	-	-	-	-	-	-
	OCU2_FCMD0	RESSEL (0-7)	FRT0_FCMD	FRT1_FCMD	FRT2_FCMD	FRT3_FCMD	FRT4_FCMD	-	-	-
		RESSEL (8-15)	-	-	-	-	-	-	-	-
		PORTSEL (0-7)	-	-	-	-	-	-	-	-
		PORTSEL (8-15)	-	-	-	-	-	-	-	-
	OCU2_FCMD1	RESSEL (0-7)	FRT0_FCMD	FRT1_FCMD	FRT2_FCMD	FRT3_FCMD	FRT4_FCMD	-	-	-
		RESSEL (8-15)	-	-	-	-	-	-	-	-
		PORTSEL (0-7)	-	-	-	-	-	-	-	-
		PORTSEL (8-15)	-	-	-	-	-	-	-	-
	OCU2_MTSF0	RESSEL (0-7)	FRT0_MTSF	FRT1_MTSF	FRT2_MTSF	FRT3_MTSF	FRT4_MTSF	-	-	-
		RESSEL (8-15)	-	-	-	-	-	-	-	-
		PORTSEL (0-7)	-	-	-	-	-	-	-	-
		PORTSEL (8-15)	-	-	-	-	-	-	-	-
	OCU2_MTSF1	RESSEL (0-7)	FRT0_MTSF	FRT1_MTSF	FRT2_MTSF	FRT3_MTSF	FRT4_MTSF	-	-	-
		RESSEL (8-15)	-	-	-	-	-	-	-	-
		PORTSEL (0-7)	-	-	-	-	-	-	-	-
		PORTSEL (8-15)	-	-	-	-	-	-	-	-

Register (Offset)	Resource	RESSEL [3:0] /PORT SEL[3:0]	Source for Resource Input							
			0	1	2	3	4	5	6	7
			8	9	10	11	12	13	14	15
RIC_RESIN238 (0x01DC)	OCU2_T0[31:0]	RESSEL (0-7)	FRT0_T [31:0]	FRT1_T [31:0]	FRT2_T [31:0]	FRT3_T [31:0]	FRT4_T [31:0]	-	-	-
		RESSEL (8-15)	-	-	-	-	-	-	-	-
		PORTSEL (0-7)	-	-	-	-	-	-	-	-
		PORTSEL (8-15)	-	-	-	-	-	-	-	-
	OCU2_T1[31:0]	RESSEL (0-7)	FRT0_T [31:0]	FRT1_T [31:0]	FRT2_T [31:0]	FRT3_T [31:0]	FRT4_T [31:0]	-	-	-
		RESSEL (8-15)	-	-	-	-	-	-	-	-
		PORTSEL (0-7)	-	-	-	-	-	-	-	-
		PORTSEL (8-15)	-	-	-	-	-	-	-	-
	OCU2_ZTSF0	RESSEL (0-7)	FRT0_ZTSF	FRT1_ZTSF	FRT2_ZTSF	FRT3_ZTSF	FRT4_ZTSF	-	-	-
		RESSEL (8-15)	-	-	-	-	-	-	-	-
		PORTSEL (0-7)	-	-	-	-	-	-	-	-
		PORTSEL (8-15)	-	-	-	-	-	-	-	-
	OCU2_ZTSF1	RESSEL (0-7)	FRT0_ZTSF	FRT1_ZTSF	FRT2_ZTSF	FRT3_ZTSF	FRT4_ZTSF	-	-	-
		RESSEL (8-15)	-	-	-	-	-	-	-	-
		PORTSEL (0-7)	-	-	-	-	-	-	-	-
		PORTSEL (8-15)	-	-	-	-	-	-	-	-

Register (Offset)	Resource	RESSEL [3:0] /PORT SEL[3:0]	Source for Resource Input							
			0	1	2	3	4	5	6	7
			8	9	10	11	12	13	14	15
RIC_RESIN239 (0x01DE)	OCU2_MOD0	RESSEL (0-7)	set 1	set 0	-	-	-	-	-	-
		RESSEL (8-15)	-	-	-	-	-	-	-	-
		PORTSEL (0-7)	-	-	-	-	-	-	-	-
		PORTSEL (8-15)	-	-	-	-	-	-	-	-
RIC_RESIN240 (0x01E0)	OCU2_MOD1	RESSEL (0-7)	set 1	set 0	-	-	-	-	-	-
		RESSEL (8-15)	-	-	-	-	-	-	-	-
		PORTSEL (0-7)	-	-	-	-	-	-	-	-
		PORTSEL (8-15)	-	-	-	-	-	-	-	-

Register (Offset)	Resource	RESSEL [3:0] /PORT SEL[3:0]	Source for Resource Input							
			0	1	2	3	4	5	6	7
			8	9	10	11	12	13	14	15
RIC_RESIN256 (0x0200)	OCU8_CK0	RESSEL (0-7)	FRT8	FRT9	FRT10	-	-	-	-	-
		RESSEL (8-15)	-	-	-	-	-	-	-	-
		PORTSEL (0-7)	-	-	-	-	-	-	-	-
		PORTSEL (8-15)	-	-	-	-	-	-	-	-
	OCU8_CK1	RESSEL (0-7)	FRT8	FRT9	FRT10	-	-	-	-	-
		RESSEL (8-15)	-	-	-	-	-	-	-	-
		PORTSEL (0-7)	-	-	-	-	-	-	-	-
		PORTSEL (8-15)	-	-	-	-	-	-	-	-
	OCU8_DOWNB0	RESSEL (0-7)	FRT8_DOWNB	FRT9_DOWNB	FRT10_DOWNB	-	-	-	-	-
		RESSEL (8-15)	-	-	-	-	-	-	-	-
		PORTSEL (0-7)	-	-	-	-	-	-	-	-
		PORTSEL (8-15)	-	-	-	-	-	-	-	-
	OCU8_DOWNB1	RESSEL (0-7)	FRT8_DOWNB	FRT9_DOWNB	FRT10_DOWNB	-	-	-	-	-
		RESSEL (8-15)	-	-	-	-	-	-	-	-
		PORTSEL (0-7)	-	-	-	-	-	-	-	-
		PORTSEL (8-15)	-	-	-	-	-	-	-	-
	OCU8_FCMD0	RESSEL (0-7)	FRT8_FCMD	FRT9_FCMD	FRT10_FCMD	-	-	-	-	-
		RESSEL (8-15)	-	-	-	-	-	-	-	-
		PORTSEL (0-7)	-	-	-	-	-	-	-	-
		PORTSEL (8-15)	-	-	-	-	-	-	-	-

Register (Offset)	Resource	RESSEL [3:0] /PORT SEL[3:0]	Source for Resource Input							
			0	1	2	3	4	5	6	7
			8	9	10	11	12	13	14	15
RIC_RESIN256 (0x0200)	OCU8_FCMD1	RESSEL (0-7)	FRT8_FCMD	FRT9_FCMD	FRT10_FCMD	-	-	-	-	-
		RESSEL (8-15)	-	-	-	-	-	-	-	-
		PORTSEL (0-7)	-	-	-	-	-	-	-	-
		PORTSEL (8-15)	-	-	-	-	-	-	-	-
	OCU8_MTSF0	RESSEL (0-7)	FRT8_MTSF	FRT9_MTSF	FRT10_MTSF	-	-	-	-	-
		RESSEL (8-15)	-	-	-	-	-	-	-	-
		PORTSEL (0-7)	-	-	-	-	-	-	-	-
		PORTSEL (8-15)	-	-	-	-	-	-	-	-
	OCU8_MTSF1	RESSEL (0-7)	FRT8_MTSF	FRT9_MTSF	FRT10_MTSF	-	-	-	-	-
		RESSEL (8-15)	-	-	-	-	-	-	-	-
		PORTSEL (0-7)	-	-	-	-	-	-	-	-
		PORTSEL (8-15)	-	-	-	-	-	-	-	-
	OCU8_T0[31:0]	RESSEL (0-7)	FRT8_T[31:0]	FRT9_T[31:0]	FRT10_T[31:0]	-	-	-	-	-
		RESSEL (8-15)	-	-	-	-	-	-	-	-
		PORTSEL (0-7)	-	-	-	-	-	-	-	-
		PORTSEL (8-15)	-	-	-	-	-	-	-	-
	OCU8_T1[31:0]	RESSEL (0-7)	FRT8_T[31:0]	FRT9_T[31:0]	FRT10_T[31:0]	-	-	-	-	-
		RESSEL (8-15)	-	-	-	-	-	-	-	-
		PORTSEL (0-7)	-	-	-	-	-	-	-	-
		PORTSEL (8-15)	-	-	-	-	-	-	-	-

Register (Offset)	Resource	RESSEL [3:0] /PORT SEL[3:0]	Source for Resource Input							
			0	1	2	3	4	5	6	7
			8	9	10	11	12	13	14	15
RIC_RESIN256 (0x0200)	OCU8_ZTSF0	RESSEL (0-7)	FRT8_ZTSF	FRT9_ZTSF	FRT10_ZTSF	-	-	-	-	-
		RESSEL (8-15)	-	-	-	-	-	-	-	-
		PORTSEL (0-7)	-	-	-	-	-	-	-	-
		PORTSEL (8-15)	-	-	-	-	-	-	-	-
	OCU8_ZTSF1	RESSEL (0-7)	FRT8_ZTSF	FRT9_ZTSF	FRT10_ZTSF	-	-	-	-	-
		RESSEL (8-15)	-	-	-	-	-	-	-	-
		PORTSEL (0-7)	-	-	-	-	-	-	-	-
		PORTSEL (8-15)	-	-	-	-	-	-	-	-
RIC_RESIN257 (0x0202)	OCU8_MOD0	RESSEL (0-7)	set 1	set 0	-	-	-	-	-	-
		RESSEL (8-15)	-	-	-	-	-	-	-	-
		PORTSEL (0-7)	-	-	-	-	-	-	-	-
		PORTSEL (8-15)	-	-	-	-	-	-	-	-

Register (Offset)	Resource	RESSEL [3:0] /PORT SEL[3:0]	Source for Resource Input							
			0	1	2	3	4	5	6	7
			8	9	10	11	12	13	14	15
RIC_RESIN258 (0x0204)	OCU8_MOD1	RESSEL (0-7)	set 1	set 0	-	-	-	-	-	-
		RESSEL (8-15)	-	-	-	-	-	-	-	-
		PORTSEL (0-7)	-	-	-	-	-	-	-	-
		PORTSEL (8-15)	-	-	-	-	-	-	-	-
RIC_RESIN259 (0x0206)	OCU9_CK0	RESSEL (0-7)	FRT8	FRT9	FRT10	-	-	-	-	-
		RESSEL (8-15)	-	-	-	-	-	-	-	-
		PORTSEL (0-7)	-	-	-	-	-	-	-	-
		PORTSEL (8-15)	-	-	-	-	-	-	-	-
	OCU9_CK1	RESSEL (0-7)	FRT8	FRT9	FRT10	-	-	-	-	-
		RESSEL (8-15)	-	-	-	-	-	-	-	-
		PORTSEL (0-7)	-	-	-	-	-	-	-	-
		PORTSEL (8-15)	-	-	-	-	-	-	-	-

Register (Offset)	Resource	RESSEL [3:0] /PORT SEL[3:0]	Source for Resource Input							
			0	1	2	3	4	5	6	7
			8	9	10	11	12	13	14	15
RIC_RESIN259 (0x0206)	OCU9_DOWNB0	RESSEL (0-7)	FRT8_DOWNB	FRT9_DOWNB	FRT10_DOWNB	-	-	-	-	-
		RESSEL (8-15)	-	-	-	-	-	-	-	-
		PORTSEL (0-7)	-	-	-	-	-	-	-	-
		PORTSEL (8-15)	-	-	-	-	-	-	-	-
	OCU9_DOWNB1	RESSEL (0-7)	FRT8_DOWNB	FRT9_DOWNB	FRT10_DOWNB	-	-	-	-	-
		RESSEL (8-15)	-	-	-	-	-	-	-	-
		PORTSEL (0-7)	-	-	-	-	-	-	-	-
		PORTSEL (8-15)	-	-	-	-	-	-	-	-
	OCU9_FCMD0	RESSEL (0-7)	FRT8_FCMD	FRT9_FCMD	FRT10_FCMD	-	-	-	-	-
		RESSEL (8-15)	-	-	-	-	-	-	-	-
		PORTSEL (0-7)	-	-	-	-	-	-	-	-
		PORTSEL (8-15)	-	-	-	-	-	-	-	-
	OCU9_FCMD1	RESSEL (0-7)	FRT8_FCMD	FRT9_FCMD	FRT10_FCMD	-	-	-	-	-
		RESSEL (8-15)	-	-	-	-	-	-	-	-
		PORTSEL (0-7)	-	-	-	-	-	-	-	-
		PORTSEL (8-15)	-	-	-	-	-	-	-	-
	OCU9_MTSF0	RESSEL (0-7)	FRT8_MTSF	FRT9_MTSF	FRT10_MTSF	-	-	-	-	-
		RESSEL (8-15)	-	-	-	-	-	-	-	-
		PORTSEL (0-7)	-	-	-	-	-	-	-	-
		PORTSEL (8-15)	-	-	-	-	-	-	-	-

Register (Offset)	Resource	RESSEL [3:0] /PORT SEL[3:0]	Source for Resource Input							
			0	1	2	3	4	5	6	7
			8	9	10	11	12	13	14	15
RIC_RESIN259 (0x0206)	OCU9_MTSF1	RESSEL (0-7)	FRT8_MTSF	FRT9_MTSF	FRT10_MTSF	-	-	-	-	-
		RESSEL (8-15)	-	-	-	-	-	-	-	-
		PORTSEL (0-7)	-	-	-	-	-	-	-	-
		PORTSEL (8-15)	-	-	-	-	-	-	-	-
	OCU9_T0[31:0]	RESSEL (0-7)	FRT8_T[31:0]	FRT9_T[31:0]	FRT10_T[31:0]	-	-	-	-	-
		RESSEL (8-15)	-	-	-	-	-	-	-	-
		PORTSEL (0-7)	-	-	-	-	-	-	-	-
		PORTSEL (8-15)	-	-	-	-	-	-	-	-
	OCU9_T1[31:0]	RESSEL (0-7)	FRT8_T[31:0]	FRT9_T[31:0]	FRT10_T[31:0]	-	-	-	-	-
		RESSEL (8-15)	-	-	-	-	-	-	-	-
		PORTSEL (0-7)	-	-	-	-	-	-	-	-
		PORTSEL (8-15)	-	-	-	-	-	-	-	-
	OCU9_ZTSF0	RESSEL (0-7)	FRT8_ZTSF	FRT9_ZTSF	FRT10_ZTSF	-	-	-	-	-
		RESSEL (8-15)	-	-	-	-	-	-	-	-
		PORTSEL (0-7)	-	-	-	-	-	-	-	-
		PORTSEL (8-15)	-	-	-	-	-	-	-	-
	OCU9_ZTSF1	RESSEL (0-7)	FRT8_ZTSF	FRT9_ZTSF	FRT10_ZTSF	-	-	-	-	-
		RESSEL (8-15)	-	-	-	-	-	-	-	-
		PORTSEL (0-7)	-	-	-	-	-	-	-	-
		PORTSEL (8-15)	-	-	-	-	-	-	-	-

Register (Offset)	Resource	RESSEL [3:0] /PORT SEL[3:0]	Source for Resource Input							
			0	1	2	3	4	5	6	7
			8	9	10	11	12	13	14	15
RIC_RESIN260 (0x0208)	OCU9_MOD0	RESSEL (0-7)	set 1	set 0	-	-	-	-	-	-
		RESSEL (8-15)	-	-	-	-	-	-	-	-
		PORTSEL (0-7)	-	-	-	-	-	-	-	-
		PORTSEL (8-15)	-	-	-	-	-	-	-	-
RIC_RESIN261 (0x020A)	OCU9_MOD1	RESSEL (0-7)	set 1	set 0	-	-	-	-	-	-
		RESSEL (8-15)	-	-	-	-	-	-	-	-
		PORTSEL (0-7)	-	-	-	-	-	-	-	-
		PORTSEL (8-15)	-	-	-	-	-	-	-	-

Register (Offset)	Resource	RESSEL [3:0] /PORT SEL[3:0]	Source for Resource Input							
			0	1	2	3	4	5	6	7
			8	9	10	11	12	13	14	15
RIC_RESIN262 (0x020C)	OCU10_CK0	RESSEL (0-7)	FRT8	FRT9	FRT10	-	-	-	-	-
		RESSEL (8-15)	-	-	-	-	-	-	-	-
		PORTSEL (0-7)	-	-	-	-	-	-	-	-
		PORTSEL (8-15)	-	-	-	-	-	-	-	-
	OCU10_CK1	RESSEL (0-7)	FRT8	FRT9	FRT10	-	-	-	-	-
		RESSEL (8-15)	-	-	-	-	-	-	-	-
		PORTSEL (0-7)	-	-	-	-	-	-	-	-
		PORTSEL (8-15)	-	-	-	-	-	-	-	-
	OCU10_DOWNB0	RESSEL (0-7)	FRT8_DOWNB	FRT9_DOWNB	FRT10_DOWNB	-	-	-	-	-
		RESSEL (8-15)	-	-	-	-	-	-	-	-
		PORTSEL (0-7)	-	-	-	-	-	-	-	-
		PORTSEL (8-15)	-	-	-	-	-	-	-	-
	OCU10_DOWNB1	RESSEL (0-7)	FRT8_DOWNB	FRT9_DOWNB	FRT10_DOWNB	-	-	-	-	-
		RESSEL (8-15)	-	-	-	-	-	-	-	-
		PORTSEL (0-7)	-	-	-	-	-	-	-	-
		PORTSEL (8-15)	-	-	-	-	-	-	-	-

Register (Offset)	Resource	RESSEL [3:0] /PORT SEL[3:0]	Source for Resource Input							
			0	1	2	3	4	5	6	7
			8	9	10	11	12	13	14	15
RIC_RESIN262 (0x020C)	OCU10_FCMD0	RESSEL (0-7)	FRT8_FCMD	FRT9_FCMD	FRT10_FCMD	-	-	-	-	-
		RESSEL (8-15)	-	-	-	-	-	-	-	-
		PORTSEL (0-7)	-	-	-	-	-	-	-	-
		PORTSEL (8-15)	-	-	-	-	-	-	-	-
	OCU10_FCMD1	RESSEL (0-7)	FRT8_FCMD	FRT9_FCMD	FRT10_FCMD	-	-	-	-	-
		RESSEL (8-15)	-	-	-	-	-	-	-	-
		PORTSEL (0-7)	-	-	-	-	-	-	-	-
		PORTSEL (8-15)	-	-	-	-	-	-	-	-

Register (Offset)	Resource	RESSEL [3:0] /PORT SEL[3:0]	Source for Resource Input							
			0	1	2	3	4	5	6	7
			8	9	10	11	12	13	14	15
RIC_RESIN262 (0x020C)	OCU10_MTSF0	RESSEL (0-7)	FRT8_MTSF	FRT9_MTSF	FRT10_MTSF	-	-	-	-	-
		RESSEL (8-15)	-	-	-	-	-	-	-	-
		PORTSEL (0-7)	-	-	-	-	-	-	-	-
		PORTSEL (8-15)	-	-	-	-	-	-	-	-
	OCU10_MTSF1	RESSEL (0-7)	FRT8_MTSF	FRT9_MTSF	FRT10_MTSF	-	-	-	-	-
		RESSEL (8-15)	-	-	-	-	-	-	-	-
		PORTSEL (0-7)	-	-	-	-	-	-	-	-
		PORTSEL (8-15)	-	-	-	-	-	-	-	-
	OCU10_T0[31:0]	RESSEL (0-7)	FRT8_T[31:0]	FRT9_T[31:0]	FRT10_T[31:0]	-	-	-	-	-
		RESSEL (8-15)	-	-	-	-	-	-	-	-
		PORTSEL (0-7)	-	-	-	-	-	-	-	-
		PORTSEL (8-15)	-	-	-	-	-	-	-	-
	OCU10_T1[31:0]	RESSEL (0-7)	FRT8_T[31:0]	FRT9_T[31:0]	FRT10_T[31:0]	-	-	-	-	-
		RESSEL (8-15)	-	-	-	-	-	-	-	-
		PORTSEL (0-7)	-	-	-	-	-	-	-	-
		PORTSEL (8-15)	-	-	-	-	-	-	-	-

Register (Offset)	Resource	RESSEL [3:0] /PORT SEL[3:0]	Source for Resource Input							
			0	1	2	3	4	5	6	7
			8	9	10	11	12	13	14	15
RIC_RESIN262 (0x020C)	OCU10_ZTSF0	RESSEL (0-7)	FRT8_ZTSF	FRT9_ZTSF	FRT10_ZTSF	-	-	-	-	-
		RESSEL (8-15)	-	-	-	-	-	-	-	-
		PORTSEL (0-7)	-	-	-	-	-	-	-	-
		PORTSEL (8-15)	-	-	-	-	-	-	-	-
	OCU10_ZTSF1	RESSEL (0-7)	FRT8_ZTSF	FRT9_ZTSF	FRT10_ZTSF	-	-	-	-	-
		RESSEL (8-15)	-	-	-	-	-	-	-	-
		PORTSEL (0-7)	-	-	-	-	-	-	-	-
		PORTSEL (8-15)	-	-	-	-	-	-	-	-

Register (Offset)	Resource	RESSEL [3:0] /PORT SEL[3:0]	Source for Resource Input							
			0	1	2	3	4	5	6	7
			8	9	10	11	12	13	14	15
RIC_RESIN263 (0x020E)	OCU10_MOD0	RESSEL (0-7)	set 1	set 0	-	-	-	-	-	-
		RESSEL (8-15)	-	-	-	-	-	-	-	-
		PORTSEL (0-7)	-	-	-	-	-	-	-	-
		PORTSEL (8-15)	-	-	-	-	-	-	-	-
RIC_RESIN264 (0x0210)	OCU10_MOD1	RESSEL (0-7)	set 1	set 0	-	-	-	-	-	-
		RESSEL (8-15)	-	-	-	-	-	-	-	-
		PORTSEL (0-7)	-	-	-	-	-	-	-	-
		PORTSEL (8-15)	-	-	-	-	-	-	-	-
RIC_RESIN280 (0x0230)	ICU0_IN0	RESSEL (0-7)	PORT_PIN	MFS0_LSYN	-	-	-	-	-	-
		RESSEL (8-15)	-	-	-	-	-	-	-	-
		PORTSEL (0-7)	P1_03	P3_08	-	-	-	-	-	-
		PORTSEL (8-15)	-	-	-	-	-	-	-	-
RIC_RESIN281 (0x0232)	ICU0_IN1	RESSEL (0-7)	PORT_PIN	MFS1_LSYN	-	-	-	-	-	-
		RESSEL (8-15)	-	-	-	-	-	-	-	-
		PORTSEL (0-7)	P1_04	P3_09	-	-	-	-	-	-
		PORTSEL (8-15)	-	-	-	-	-	-	-	-

Register (Offset)	Resource	RESSEL [3:0] /PORT SEL[3:0]	Source for Resource Input							
			0	1	2	3	4	5	6	7
			8	9	10	11	12	13	14	15
RIC_RESIN282 (0x0234)	ICU0_T0[31:0]	RESSEL (0-7)	FRT0_T [31:0]	FRT1_T [31:0]	FRT2_T [31:0]	FRT3_T [31:0]	FRT4_T [31:0]	-	-	-
		RESSEL (8-15)	-	-	-	-	-	-	-	-
		PORTSEL (0-7)	-	-	-	-	-	-	-	-
		PORTSEL (8-15)	-	-	-	-	-	-	-	-
	ICU0_T1[31:0]	RESSEL (0-7)	FRT0_T [31:0]	FRT1_T [31:0]	FRT2_T [31:0]	FRT3_T [31:0]	FRT4_T [31:0]	-	-	-
		RESSEL (8-15)	-	-	-	-	-	-	-	-
		PORTSEL (0-7)	-	-	-	-	-	-	-	-
		PORTSEL (8-15)	-	-	-	-	-	-	-	-
RIC_RESIN283 (0x0236)	ICU1_IN0	RESSEL (0-7)	PORT_PIN	MFS2_LSYN	-	-	-	-	-	-
		RESSEL (8-15)	-	-	-	-	-	-	-	-
		PORTSEL (0-7)	P1_05	P3_10	-	-	-	-	-	-
		PORTSEL (8-15)	-	-	-	-	-	-	-	-
RIC_RESIN284 (0x0238)	ICU1_IN1	RESSEL (0-7)	PORT_PIN	MFS3_LSYN	-	-	-	-	-	-
		RESSEL (8-15)	-	-	-	-	-	-	-	-
		PORTSEL (0-7)	P1_06	P3_11	-	-	-	-	-	-
		PORTSEL (8-15)	-	-	-	-	-	-	-	-

Register (Offset)	Resource	RESSEL [3:0] /PORT SEL[3:0]	Source for Resource Input							
			0	1	2	3	4	5	6	7
			8	9	10	11	12	13	14	15
RIC_RESIN285 (0x023A)	ICU1_T0[31:0]	RESSEL (0-7)	FRT0_T [31:0]	FRT1_T [31:0]	FRT2_T [31:0]	FRT3_T [31:0]	FRT4_T [31:0]	-	-	-
		RESSEL (8-15)	-	-	-	-	-	-	-	-
		PORTSEL (0-7)	-	-	-	-	-	-	-	-
		PORTSEL (8-15)	-	-	-	-	-	-	-	-
	ICU1_T1[31:0]	RESSEL (0-7)	FRT0_T [31:0]	FRT1_T [31:0]	FRT2_T [31:0]	FRT3_T [31:0]	FRT4_T [31:0]	-	-	-
		RESSEL (8-15)	-	-	-	-	-	-	-	-
		PORTSEL (0-7)	-	-	-	-	-	-	-	-
		PORTSEL (8-15)	-	-	-	-	-	-	-	-
RIC_RESIN286 (0x023C)	ICU2_IN0	RESSEL (0-7)	PORT_PIN	MFS4_LSYN	-	-	-	-	-	-
		RESSEL (8-15)	-	-	-	-	-	-	-	-
		PORTSEL (0-7)	P1_07	P3_12	-	-	-	-	-	-
		PORTSEL (8-15)	-	-	-	-	-	-	-	-
RIC_RESIN287 (0x023E)	ICU2_IN1	RESSEL (0-7)	PORT_PIN	-	-	-	-	-	-	-
		RESSEL (8-15)	-	-	-	-	-	-	-	-
		PORTSEL (0-7)	P1_08	P3_13	-	-	-	-	-	-
		PORTSEL (8-15)	-	-	-	-	-	-	-	-

Register (Offset)	Resource	RESSEL [3:0] /PORT SEL[3:0]	Source for Resource Input							
			0	1	2	3	4	5	6	7
			8	9	10	11	12	13	14	15
RIC_RESIN288 (0x0240)	ICU2_T0[31:0]	RESSEL (0-7)	FRT0_T [31:0]	FRT1_T [31:0]	FRT2_T [31:0]	FRT3_T [31:0]	FRT4_T [31:0]	-	-	-
		RESSEL (8-15)	-	-	-	-	-	-	-	-
		PORTSEL (0-7)	-	-	-	-	-	-	-	-
		PORTSEL (8-15)	-	-	-	-	-	-	-	-
	ICU2_T1[31:0]	RESSEL (0-7)	FRT0_T [31:0]	FRT1_T [31:0]	FRT2_T [31:0]	FRT3_T [31:0]	FRT4_T [31:0]	-	-	-
		RESSEL (8-15)	-	-	-	-	-	-	-	-
		PORTSEL (0-7)	-	-	-	-	-	-	-	-
		PORTSEL (8-15)	-	-	-	-	-	-	-	-
RIC_RESIN304 (0x0260)	ICU8_IN0	RESSEL (0-7)	PORT_PIN	MFS8_LSYN	-	-	-	-	-	-
		RESSEL (8-15)	-	-	-	-	-	-	-	-
		PORTSEL (0-7)	P1_09	P3_14	-	-	-	-	-	-
		PORTSEL (8-15)	-	-	-	-	-	-	-	-
RIC_RESIN305 (0x0262)	ICU8_IN1	RESSEL (0-7)	PORT_PIN	MFS9_LSYN	-	-	-	-	-	-
		RESSEL (8-15)	-	-	-	-	-	-	-	-
		PORTSEL (0-7)	P1_10	P3_15	-	-	-	-	-	-
		PORTSEL (8-15)	-	-	-	-	-	-	-	-

Register (Offset)	Resource	RESSEL [3:0] /PORT SEL[3:0]	Source for Resource Input							
			0	1	2	3	4	5	6	7
			8	9	10	11	12	13	14	15
RIC_RESIN306 (0x0264)	ICU8_T0[31:0]	RESSEL (0-7)	FRT8_T [31:0]	FRT9_T [31:0]	FRT10_T[31:0]	-	-	-	-	-
		RESSEL (8-15)	-	-	-	-	-	-	-	-
		PORTSEL (0-7)	-	-	-	-	-	-	-	-
		PORTSEL (8-15)	-	-	-	-	-	-	-	-
	ICU8_T1[31:0]	RESSEL (0-7)	FRT8_T [31:0]	FRT9_T [31:0]	FRT10_T[31:0]	-	-	-	-	-
		RESSEL (8-15)	-	-	-	-	-	-	-	-
		PORTSEL (0-7)	-	-	-	-	-	-	-	-
		PORTSEL (8-15)	-	-	-	-	-	-	-	-
RIC_RESIN307 (0x0266)	ICU9_IN0	RESSEL (0-7)	PORT_PIN	MFS10_LSYN	-	-	-	-	-	-
		RESSEL (8-15)	-	-	-	-	-	-	-	-
		PORTSEL (0-7)	P1_11	P3_16	-	-	-	-	-	-
		PORTSEL (8-15)	-	-	-	-	-	-	-	-
RIC_RESIN308 (0x0268)	ICU9_IN1	RESSEL (0-7)	PORT_PIN	MFS11_LSYN	-	-	-	-	-	-
		RESSEL (8-15)	-	-	-	-	-	-	-	-
		PORTSEL (0-7)	P1_12	P3_17	-	-	-	-	-	-
		PORTSEL (8-15)	-	-	-	-	-	-	-	-

Register (Offset)	Resource	RESSEL [3:0] /PORT SEL[3:0]	Source for Resource Input							
			0	1	2	3	4	5	6	7
			8	9	10	11	12	13	14	15
RIC_RESIN309 (0x026A)	ICU9_T0[31:0]	RESSEL (0-7)	FRT8_T [31:0]	FRT9_T [31:0]	FRT10_T[31:0]	-	-	-	-	-
		RESSEL (8-15)	-	-	-	-	-	-	-	-
		PORTSEL (0-7)	-	-	-	-	-	-	-	-
		PORTSEL (8-15)	-	-	-	-	-	-	-	-
	ICU9_T1[31:0]	RESSEL (0-7)	FRT8_T [31:0]	FRT9_T [31:0]	FRT10_T[31:0]	-	-	-	-	-
		RESSEL (8-15)	-	-	-	-	-	-	-	-
		PORTSEL (0-7)	-	-	-	-	-	-	-	-
		PORTSEL (8-15)	-	-	-	-	-	-	-	-
RIC_RESIN310 (0x026C)	ICU10_IN0	RESSEL (0-7)	PORT_PIN	MFS12_LSYN	-	-	-	-	-	-
		RESSEL (8-15)	-	-	-	-	-	-	-	-
		PORTSEL (0-7)	P1_14	P3_18	-	-	-	-	-	-
		PORTSEL (8-15)	-	-	-	-	-	-	-	-
RIC_RESIN311 (0x026E)	ICU10_IN1	RESSEL (0-7)	PORT_PIN	-	-	-	-	-	-	-
		RESSEL (8-15)	-	-	-	-	-	-	-	-
		PORTSEL (0-7)	P1_15	P3_19	-	-	-	-	-	-
		PORTSEL (8-15)	-	-	-	-	-	-	-	-

Register (Offset)	Resource	RESSEL [3:0] /PORT SEL[3:0]	Source for Resource Input							
			0	1	2	3	4	5	6	7
			8	9	10	11	12	13	14	15
RIC_RESIN312 (0x0270)	ICU10_T0 [31:0]	RESSEL (0-7)	FRT8_T [31:0]	FRT9_T [31:0]	FRT10_T[31:0]	-	-	-	-	-
		RESSEL (8-15)	-	-	-	-	-	-	-	-
		PORTSEL (0-7)	-	-	-	-	-	-	-	-
		PORTSEL (8-15)	-	-	-	-	-	-	-	-
	ICU10_T1 [31:0]	RESSEL (0-7)	FRT8_T [31:0]	FRT9_T [31:0]	FRT10_T[31:0]	-	-	-	-	-
		RESSEL (8-15)	-	-	-	-	-	-	-	-
		PORTSEL (0-7)	-	-	-	-	-	-	-	-
		PORTSEL (8-15)	-	-	-	-	-	-	-	-
RIC_RESIN352 (0x02C0)	AIN8	RESSEL (0-7)	PORT_PIN	TOT0	-	-	-	-	-	-
		RESSEL (8-15)	-	-	-	-	-	-	-	-
		PORTSEL (0-7)	-	-	-	-	-	-	-	-
		PORTSEL (8-15)	-	-	-	-	-	-	-	-
RIC_RESIN353 (0x02C2)	BIN8	RESSEL (0-7)	PORT_PIN	TOT1	-	-	-	-	-	-
		RESSEL (8-15)	-	-	-	-	-	-	-	-
		PORTSEL (0-7)	-	-	-	-	-	-	-	-
		PORTSEL (8-15)	-	-	-	-	-	-	-	-

Register (Offset)	Resource	RESSEL [3:0] /PORT SEL[3:0]	Source for Resource Input							
			0	1	2	3	4	5	6	7
			8	9	10	11	12	13	14	15
RIC_RESIN354 (0x02C4)	ZIN8	RESSEL (0-7)	PORT_PIN	TOT16	PPG6_TOUT0	PPG6_TOUT2	PPG7_TOUT0	-	-	-
		RESSEL (8-15)	-	-	-	-	-	-	-	-
		PORTSEL (0-7)	-	-	-	-	-	-	-	-
		PORTSEL (8-15)	-	-	-	-	-	-	-	-
RIC_RESIN355 (0x02C6)	AIN9	RESSEL (0-7)	PORT_PIN	TOT16	-	-	-	-	-	-
		RESSEL (8-15)	-	-	-	-	-	-	-	-
		PORTSEL (0-7)	-	-	-	-	-	-	-	-
		PORTSEL (8-15)	-	-	-	-	-	-	-	-
RIC_RESIN356 (0x02C8)	BIN9	RESSEL (0-7)	PORT_PIN	TOT17	-	-	-	-	-	-
		RESSEL (8-15)	-	-	-	-	-	-	-	-
		PORTSEL (0-7)	-	-	-	-	-	-	-	-
		PORTSEL (8-15)	-	-	-	-	-	-	-	-
RIC_RESIN357 (0x02CA)	ZIN9	RESSEL (0-7)	PORT_PIN	TOT0	PPG6_TOUT0	PPG6_TOUT2	PPG7_TOUT0	-	-	-
		RESSEL (8-15)	-	-	-	-	-	-	-	-
		PORTSEL (0-7)	-	-	-	-	-	-	-	-
		PORTSEL (8-15)	-	-	-	-	-	-	-	-

Register (Offset)	Resource	RESSEL [3:0] /PORT SEL[3:0]	Source for Resource Input							
			0	1	2	3	4	5	6	7
			8	9	10	11	12	13	14	15
RIC_RESIN376 (0x02F0)	PPG0_TIN1	RESSEL (0-7)	PORT_PIN	TOT0	RLT0_UFSET	TOT0	RLT0_UFSET	FRT0_MTSF	OCU0_OTD0	-
		RESSEL (8-15)	-	-	-	-	-	-	-	-
		PORTSEL (0-7)	P1_16	P3_04	-	-	-	-	-	-
		PORTSEL (8-15)	-	-	-	-	-	-	-	-
RIC_RESIN377 (0x02F2)	PPG0_TIN2	RESSEL (0-7)	set 0	-	-	-	-	-	-	-
		RESSEL (8-15)	-	-	-	-	-	-	-	-
		PORTSEL (0-7)	-	-	-	-	-	-	-	-
		PORTSEL (8-15)	-	-	-	-	-	-	-	-
RIC_RESIN378 (0x02F4)	PPG0_TIN3	RESSEL (0-7)	set 0	-	-	-	-	-	-	-
		RESSEL (8-15)	-	-	-	-	-	-	-	-
		PORTSEL (0-7)	-	-	-	-	-	-	-	-
		PORTSEL (8-15)	-	-	-	-	-	-	-	-
RIC_RESIN379 (0x02F6)	PPG1_TIN1	RESSEL (0-7)	PORT_PIN	TOT0	RLT0_UFSET	TOT0	RLT0_UFSET	FRT0_MTSF	OCU0_OTD0	-
		RESSEL (8-15)	-	-	-	-	-	-	-	-
		PORTSEL (0-7)	P1_16	P3_04	-	-	-	-	-	-
		PORTSEL (8-15)	-	-	-	-	-	-	-	-

Register (Offset)	Resource	RESSEL [3:0] /PORT SEL[3:0]	Source for Resource Input							
			0	1	2	3	4	5	6	7
			8	9	10	11	12	13	14	15
RIC_RESIN380 (0x02F8)	PPG1_TIN2	RESSEL (0-7)	set 0	-	-	-	-	-	-	-
		RESSEL (8-15)	-	-	-	-	-	-	-	-
		PORTSEL (0-7)	-	-	-	-	-	-	-	-
		PORTSEL (8-15)	-	-	-	-	-	-	-	-
RIC_RESIN381 (0x02FA)	PPG1_TIN3	RESSEL (0-7)	set 0	-	-	-	-	-	-	-
		RESSEL (8-15)	-	-	-	-	-	-	-	-
		PORTSEL (0-7)	-	-	-	-	-	-	-	-
		PORTSEL (8-15)	-	-	-	-	-	-	-	-
RIC_RESIN382 (0x02FC)	PPG2_TIN1	RESSEL (0-7)	PORT_PIN	TOT0	RLT0_UFSET	TOT0	RLT0_UFSET	FRT0_MTSF	OCU0_OTD0	-
		RESSEL (8-15)	-	-	-	-	-	-	-	-
		PORTSEL (0-7)	P1_16	P3_04	-	-	-	-	-	-
		PORTSEL (8-15)	-	-	-	-	-	-	-	-
RIC_RESIN383 (0x02FE)	PPG2_TIN2	RESSEL (0-7)	set 0	-	-	-	-	-	-	-
		RESSEL (8-15)	-	-	-	-	-	-	-	-
		PORTSEL (0-7)	-	-	-	-	-	-	-	-
		PORTSEL (8-15)	-	-	-	-	-	-	-	-
RIC_RESIN384 (0x0300)	PPG2_TIN3	RESSEL (0-7)	set 0	-	-	-	-	-	-	-
		RESSEL (8-15)	-	-	-	-	-	-	-	-
		PORTSEL (0-7)	-	-	-	-	-	-	-	-
		PORTSEL (8-15)	-	-	-	-	-	-	-	-

Register (Offset)	Resource	RESSEL [3:0] /PORT SEL[3:0]	Source for Resource Input							
			0	1	2	3	4	5	6	7
			8	9	10	11	12	13	14	15
RIC_RESIN385 (0x0302)	PPG3_TIN1	RESSEL (0-7)	PORT_PIN	TOT0	RLT0_UFSET	TOT1	RLT1_UFSET	FRT0_MTSF	OCU0_OTD0	-
		RESSEL (8-15)	-	-	-	-	-	-	-	-
		PORTSEL (0-7)	P1_16	P3_04	-	-	-	-	-	-
		PORTSEL (8-15)	-	-	-	-	-	-	-	-
RIC_RESIN386 (0x0304)	PPG3_TIN2	RESSEL (0-7)	set 0	-	-	-	-	-	-	-
		RESSEL (8-15)	-	-	-	-	-	-	-	-
		PORTSEL (0-7)	-	-	-	-	-	-	-	-
		PORTSEL (8-15)	-	-	-	-	-	-	-	-
RIC_RESIN387 (0x0306)	PPG3_TIN3	RESSEL (0-7)	set 0	-	-	-	-	-	-	-
		RESSEL (8-15)	-	-	-	-	-	-	-	-
		PORTSEL (0-7)	-	-	-	-	-	-	-	-
		PORTSEL (8-15)	-	-	-	-	-	-	-	-
RIC_RESIN388 (0x0308)	PPG4_TIN1	RESSEL (0-7)	PORT_PIN	TOT0	RLT0_UFSET	TOT1	RLT1_UFSET	FRT0_MTSF	OCU0_OTD0	-
		RESSEL (8-15)	-	-	-	-	-	-	-	-
		PORTSEL (0-7)	P1_16	P3_04	-	-	-	-	-	-
		PORTSEL (8-15)	-	-	-	-	-	-	-	-
RIC_RESIN389 (0x030A)	PPG4_TIN2	RESSEL (0-7)	set 0	-	-	-	-	-	-	-
		RESSEL (8-15)	-	-	-	-	-	-	-	-
		PORTSEL (0-7)	-	-	-	-	-	-	-	-
		PORTSEL (8-15)	-	-	-	-	-	-	-	-

Register (Offset)	Resource	RESSEL [3:0] /PORT SEL[3:0]	Source for Resource Input							
			0	1	2	3	4	5	6	7
			8	9	10	11	12	13	14	15
RIC_RESIN390 (0x030C)	PPG4_TIN3	RESSEL (0-7)	set 0	-	-	-	-	-	-	-
		RESSEL (8-15)	-	-	-	-	-	-	-	-
		PORTSEL (0-7)	-	-	-	-	-	-	-	-
		PORTSEL (8-15)	-	-	-	-	-	-	-	-
RIC_RESIN391 (0x030E)	PPG5_TIN1	RESSEL (0-7)	PORT_PIN	TOT0	RLT0_UFSET	TOT1	RLT1_UFSET	FRT0_MTSF	OCU0_OTD0	-
		RESSEL (8-15)	-	-	-	-	-	-	-	-
		PORTSEL (0-7)	P1_16	P3_04	-	-	-	-	-	-
		PORTSEL (8-15)	-	-	-	-	-	-	-	-
RIC_RESIN392 (0x0310)	PPG5_TIN2	RESSEL (0-7)	set 0	-	-	-	-	-	-	-
		RESSEL (8-15)	-	-	-	-	-	-	-	-
		PORTSEL (0-7)	-	-	-	-	-	-	-	-
		PORTSEL (8-15)	-	-	-	-	-	-	-	-
RIC_RESIN393 (0x0312)	PPG5_TIN3	RESSEL (0-7)	set 0	-	-	-	-	-	-	-
		RESSEL (8-15)	-	-	-	-	-	-	-	-
		PORTSEL (0-7)	-	-	-	-	-	-	-	-
		PORTSEL (8-15)	-	-	-	-	-	-	-	-
RIC_RESIN394 (0x0314)	PPG6_TIN1	RESSEL (0-7)	PORT_PIN	TOT0	RLT0_UFSET	TOT16	RLT16_UFSET	FRT8_MTSF	OCU8_OTD0	-
		RESSEL (8-15)	-	-	-	-	-	-	-	-
		PORTSEL (0-7)	P1_29	P3_20	-	-	-	-	-	-
		PORTSEL (8-15)	-	-	-	-	-	-	-	-

Register (Offset)	Resource	RESSEL [3:0] /PORT SEL[3:0]	Source for Resource Input							
			0	1	2	3	4	5	6	7
			8	9	10	11	12	13	14	15
RIC_RESIN395 (0x0316)	PPG6_TIN2	RESSEL (0-7)	set 0	-	-	-	-	-	-	-
		RESSEL (8-15)	-	-	-	-	-	-	-	-
		PORTSEL (0-7)	-	-	-	-	-	-	-	-
		PORTSEL (8-15)	-	-	-	-	-	-	-	-
RIC_RESIN396 (0x0318)	PPG6_TIN3	RESSEL (0-7)	set 0	-	-	-	-	-	-	-
		RESSEL (8-15)	-	-	-	-	-	-	-	-
		PORTSEL (0-7)	-	-	-	-	-	-	-	-
		PORTSEL (8-15)	-	-	-	-	-	-	-	-
RIC_RESIN397 (0x031A)	PPG7_TIN1	RESSEL (0-7)	PORT_PIN	TOT0	RLT0_UFSET	TOT16	RLT16_UFSET	FRT8_MTSF	OCU8_OTD0	-
		RESSEL (8-15)	-	-	-	-	-	-	-	-
		PORTSEL (0-7)	P1_29	P3_20	-	-	-	-	-	-
		PORTSEL (8-15)	-	-	-	-	-	-	-	-
RIC_RESIN398 (0x031C)	PPG7_TIN2	RESSEL (0-7)	set 0	-	-	-	-	-	-	-
		RESSEL (8-15)	-	-	-	-	-	-	-	-
		PORTSEL (0-7)	-	-	-	-	-	-	-	-
		PORTSEL (8-15)	-	-	-	-	-	-	-	-
RIC_RESIN399 (0x031E)	PPG7_TIN3	RESSEL (0-7)	set 0	-	-	-	-	-	-	-
		RESSEL (8-15)	-	-	-	-	-	-	-	-
		PORTSEL (0-7)	-	-	-	-	-	-	-	-
		PORTSEL (8-15)	-	-	-	-	-	-	-	-

Register (Offset)	Resource	RESSEL [3:0] /PORT SEL[3:0]	Source for Resource Input							
			0	1	2	3	4	5	6	7
			8	9	10	11	12	13	14	15
RIC_RESIN400 (0x0320)	PPG8_TIN1	RESSEL (0-7)	PORT_PIN	TOT0	RLT0_UFSET	TOT16	RLT16_UFSET	FRT8_MTSF	OCU8_OTD0	-
		RESSEL (8-15)	-	-	-	-	-	-	-	-
		PORTSEL (0-7)	P1_29	P3_20	-	-	-	-	-	-
		PORTSEL (8-15)	-	-	-	-	-	-	-	-
RIC_RESIN401 (0x0322)	PPG8_TIN2	RESSEL (0-7)	set 0	-	-	-	-	-	-	-
		RESSEL (8-15)	-	-	-	-	-	-	-	-
		PORTSEL (0-7)	-	-	-	-	-	-	-	-
		PORTSEL (8-15)	-	-	-	-	-	-	-	-
RIC_RESIN402 (0x0324)	PPG8_TIN3	RESSEL (0-7)	set 0	-	-	-	-	-	-	-
		RESSEL (8-15)	-	-	-	-	-	-	-	-
		PORTSEL (0-7)	-	-	-	-	-	-	-	-
		PORTSEL (8-15)	-	-	-	-	-	-	-	-
RIC_RESIN403 (0x0326)	PPG9_TIN1	RESSEL (0-7)	PORT_PIN	TOT0	RLT0_UFSET	TOT17	RLT17_UFSET	FRT8_MTSF	OCU8_OTD0	-
		RESSEL (8-15)	-	-	-	-	-	-	-	-
		PORTSEL (0-7)	P1_29	P3_20	-	-	-	-	-	-
		PORTSEL (8-15)	-	-	-	-	-	-	-	-
RIC_RESIN404 (0x0328)	PPG9_TIN2	RESSEL (0-7)	set 0	-	-	-	-	-	-	-
		RESSEL (8-15)	-	-	-	-	-	-	-	-
		PORTSEL (0-7)	-	-	-	-	-	-	-	-
		PORTSEL (8-15)	-	-	-	-	-	-	-	-

Register (Offset)	Resource	RESSEL [3:0] /PORT SEL[3:0]	Source for Resource Input							
			0	1	2	3	4	5	6	7
			8	9	10	11	12	13	14	15
RIC_RESIN405 (0x032A)	PPG9_TIN3	RESSEL (0-7)	set 0	-	-	-	-	-	-	-
		RESSEL (8-15)	-	-	-	-	-	-	-	-
		PORTSEL (0-7)	-	-	-	-	-	-	-	-
		PORTSEL (8-15)	-	-	-	-	-	-	-	-
RIC_RESIN406 (0x032C)	PPG10_TIN1	RESSEL (0-7)	PORT_PIN	TOT0	RLT0_UFSET	TOT17	RLT17_UFSET	FRT8_MTSF	OCU8_OTD0	-
		RESSEL (8-15)	-	-	-	-	-	-	-	-
		PORTSEL (0-7)	P1_29	P3_20	-	-	-	-	-	-
		PORTSEL (8-15)	-	-	-	-	-	-	-	-
RIC_RESIN407 (0x032E)	PPG10_TIN2	RESSEL (0-7)	set 0	-	-	-	-	-	-	-
		RESSEL (8-15)	-	-	-	-	-	-	-	-
		PORTSEL (0-7)	-	-	-	-	-	-	-	-
		PORTSEL (8-15)	-	-	-	-	-	-	-	-
RIC_RESIN408 (0x0330)	PPG10_TIN3	RESSEL (0-7)	set 0	-	-	-	-	-	-	-
		RESSEL (8-15)	-	-	-	-	-	-	-	-
		PORTSEL (0-7)	-	-	-	-	-	-	-	-
		PORTSEL (8-15)	-	-	-	-	-	-	-	-
RIC_RESIN409 (0x0332)	PPG11_TIN1	RESSEL (0-7)	PORT_PIN	TOT0	RLT0_UFSET	TOT17	RLT17_UFSET	FRT8_MTSF	OCU8_OTD0	-
		RESSEL (8-15)	-	-	-	-	-	-	-	-
		PORTSEL (0-7)	P1_29	P3_20	-	-	-	-	-	-
		PORTSEL (8-15)	-	-	-	-	-	-	-	-

Register (Offset)	Resource	RESSEL [3:0] /PORT SEL[3:0]	Source for Resource Input							
			0	1	2	3	4	5	6	7
			8	9	10	11	12	13	14	15
RIC_RESIN410 (0x0334)	PPG11_TIN2	RESSEL (0-7)	set 0	-	-	-	-	-	-	-
		RESSEL (8-15)	-	-	-	-	-	-	-	-
		PORTSEL (0-7)	-	-	-	-	-	-	-	-
		PORTSEL (8-15)	-	-	-	-	-	-	-	-
RIC_RESIN411 (0x0336)	PPG11_TIN3	RESSEL (0-7)	set 0	-	-	-	-	-	-	-
		RESSEL (8-15)	-	-	-	-	-	-	-	-
		PORTSEL (0-7)	-	-	-	-	-	-	-	-
		PORTSEL (8-15)	-	-	-	-	-	-	-	-
RIC_RESIN430 (0x035C)	PPG12_TIN1	RESSEL (0-7)	PORT_PIN	TOT0	RLT0_UFSET	-	-	-	-	-
		RESSEL (8-15)	-	-	-	-	-	-	-	-
		PORTSEL (0-7)	P2_06	P3_31	-	-	-	-	-	-
		PORTSEL (8-15)	-	-	-	-	-	-	-	-
RIC_RESIN431 (0x035E)	PPG12_TIN2	RESSEL (0-7)	set 0	-	-	-	-	-	-	-
		RESSEL (8-15)	-	-	-	-	-	-	-	-
		PORTSEL (0-7)	-	-	-	-	-	-	-	-
		PORTSEL (8-15)	-	-	-	-	-	-	-	-
RIC_RESIN432 (0x0360)	PPG12_TIN3	RESSEL (0-7)	set 0	-	-	-	-	-	-	-
		RESSEL (8-15)	-	-	-	-	-	-	-	-
		PORTSEL (0-7)	-	-	-	-	-	-	-	-
		PORTSEL (8-15)	-	-	-	-	-	-	-	-

Register (Offset)	Resource	RESSEL [3:0] /PORT SEL[3:0]	Source for Resource Input							
			0	1	2	3	4	5	6	7
			8	9	10	11	12	13	14	15
RIC_RESIN433 (0x0362)	PPG13_TIN1	RESSEL (0-7)	PORT_PIN	TOT0	RLT0_UFSET	-	-	-	-	-
		RESSEL (8-15)	-	-	-	-	-	-	-	-
		PORTSEL (0-7)	P2_06	P3_31	-	-	-	-	-	-
		PORTSEL (8-15)	-	-	-	-	-	-	-	-
RIC_RESIN434 (0x0364)	PPG13_TIN2	RESSEL (0-7)	set 0	-	-	-	-	-	-	-
		RESSEL (8-15)	-	-	-	-	-	-	-	-
		PORTSEL (0-7)	-	-	-	-	-	-	-	-
		PORTSEL (8-15)	-	-	-	-	-	-	-	-
RIC_RESIN435 (0x0366)	PPG13_TIN3	RESSEL (0-7)	set 0	-	-	-	-	-	-	-
		RESSEL (8-15)	-	-	-	-	-	-	-	-
		PORTSEL (0-7)	-	-	-	-	-	-	-	-
		PORTSEL (8-15)	-	-	-	-	-	-	-	-
RIC_RESIN436 (0x0368)	PPG14_TIN1	RESSEL (0-7)	PORT_PIN	TOT0	RLT0_UFSET	-	-	-	-	-
		RESSEL (8-15)	-	-	-	-	-	-	-	-
		PORTSEL (0-7)	P2_06	P3_31	-	-	-	-	-	-
		PORTSEL (8-15)	-	-	-	-	-	-	-	-
RIC_RESIN437 (0x036A)	PPG14_TIN2	RESSEL (0-7)	set 0	-	-	-	-	-	-	-
		RESSEL (8-15)	-	-	-	-	-	-	-	-
		PORTSEL (0-7)	-	-	-	-	-	-	-	-
		PORTSEL (8-15)	-	-	-	-	-	-	-	-

Register (Offset)	Resource	RESSEL [3:0] /PORT SEL[3:0]	Source for Resource Input							
			0	1	2	3	4	5	6	7
			8	9	10	11	12	13	14	15
RIC_RESIN438 (0x036C)	PPG14_TIN3	RESSEL (0-7)	set 0	-	-	-	-	-	-	-
		RESSEL (8-15)	-	-	-	-	-	-	-	-
		PORTSEL (0-7)	-	-	-	-	-	-	-	-
		PORTSEL (8-15)	-	-	-	-	-	-	-	-
RIC_RESIN439 (0x036E)	PPG15_TIN1	RESSEL (0-7)	PORT_PIN	TOT0	RLT0_UFSET	-	-	-	-	-
		RESSEL (8-15)	-	-	-	-	-	-	-	-
		PORTSEL (0-7)	P2_06	P3_31	-	-	-	-	-	-
		PORTSEL (8-15)	-	-	-	-	-	-	-	-
RIC_RESIN440 (0x0370)	PPG15_TIN2	RESSEL (0-7)	set 0	-	-	-	-	-	-	-
		RESSEL (8-15)	-	-	-	-	-	-	-	-
		PORTSEL (0-7)	-	-	-	-	-	-	-	-
		PORTSEL (8-15)	-	-	-	-	-	-	-	-
RIC_RESIN441 (0x0372)	PPG15_TIN3	RESSEL (0-7)	set 0	-	-	-	-	-	-	-
		RESSEL (8-15)	-	-	-	-	-	-	-	-
		PORTSEL (0-7)	-	-	-	-	-	-	-	-
		PORTSEL (8-15)	-	-	-	-	-	-	-	-
RIC_RESIN442 (0x0374)	PPG16_TIN1	RESSEL (0-7)	PORT_PIN	TOT0	RLT0_UFSET	-	-	-	-	-
		RESSEL (8-15)	-	-	-	-	-	-	-	-
		PORTSEL (0-7)	-	-	-	-	-	-	-	-
		PORTSEL (8-15)	-	-	-	-	-	-	-	-

Register (Offset)	Resource	RESSEL [3:0] /PORT SEL[3:0]	Source for Resource Input							
			0	1	2	3	4	5	6	7
			8	9	10	11	12	13	14	15
RIC_RESIN443 (0x0376)	PPG16_TIN2	RESSEL (0-7)	set 0	-	-	-	-	-	-	-
		RESSEL (8-15)	-	-	-	-	-	-	-	-
		PORTSEL (0-7)	-	-	-	-	-	-	-	-
		PORTSEL (8-15)	-	-	-	-	-	-	-	-
RIC_RESIN444 (0x0378)	PPG16_TIN3	RESSEL (0-7)	set 0	-	-	-	-	-	-	-
		RESSEL (8-15)	-	-	-	-	-	-	-	-
		PORTSEL (0-7)	-	-	-	-	-	-	-	-
		PORTSEL (8-15)	-	-	-	-	-	-	-	-
RIC_RESIN445 (0x037A)	PPG17_TIN1	RESSEL (0-7)	PORT_PIN	TOT0	RLT0_UFSET	-	-	-	-	-
		RESSEL (8-15)	-	-	-	-	-	-	-	-
		PORTSEL (0-7)	-	-	-	-	-	-	-	-
		PORTSEL (8-15)	-	-	-	-	-	-	-	-
RIC_RESIN446 (0x037C)	PPG17_TIN2	RESSEL (0-7)	set 0	-	-	-	-	-	-	-
		RESSEL (8-15)	-	-	-	-	-	-	-	-
		PORTSEL (0-7)	-	-	-	-	-	-	-	-
		PORTSEL (8-15)	-	-	-	-	-	-	-	-
RIC_RESIN447 (0x037E)	PPG17_TIN3	RESSEL (0-7)	set 0	-	-	-	-	-	-	-
		RESSEL (8-15)	-	-	-	-	-	-	-	-
		PORTSEL (0-7)	-	-	-	-	-	-	-	-
		PORTSEL (8-15)	-	-	-	-	-	-	-	-

Register (Offset)	Resource	RESSEL [3:0] /PORT SEL[3:0]	Source for Resource Input							
			0	1	2	3	4	5	6	7
			8	9	10	11	12	13	14	15
RIC_RESIN448 (0x0380)	PPG18_TIN1	RESSEL (0-7)	PORT_PIN	TOT0	RLT0_UFSET	-	-	-	-	-
		RESSEL (8-15)	-	-	-	-	-	-	-	-
		PORTSEL (0-7)	-	-	-	-	-	-	-	-
		PORTSEL (8-15)	-	-	-	-	-	-	-	-
RIC_RESIN449 (0x0382)	PPG18_TIN2	RESSEL (0-7)	set 0	-	-	-	-	-	-	-
		RESSEL (8-15)	-	-	-	-	-	-	-	-
		PORTSEL (0-7)	-	-	-	-	-	-	-	-
		PORTSEL (8-15)	-	-	-	-	-	-	-	-
RIC_RESIN450 (0x0384)	PPG18_TIN3	RESSEL (0-7)	set 0	-	-	-	-	-	-	-
		RESSEL (8-15)	-	-	-	-	-	-	-	-
		PORTSEL (0-7)	-	-	-	-	-	-	-	-
		PORTSEL (8-15)	-	-	-	-	-	-	-	-
RIC_RESIN451 (0x0386)	PPG19_TIN1	RESSEL (0-7)	PORT_PIN	TOT0	RLT0_UFSET	-	-	-	-	-
		RESSEL (8-15)	-	-	-	-	-	-	-	-
		PORTSEL (0-7)	-	-	-	-	-	-	-	-
		PORTSEL (8-15)	-	-	-	-	-	-	-	-
RIC_RESIN452 (0x0388)	PPG19_TIN2	RESSEL (0-7)	set 0	-	-	-	-	-	-	-
		RESSEL (8-15)	-	-	-	-	-	-	-	-
		PORTSEL (0-7)	-	-	-	-	-	-	-	-
		PORTSEL (8-15)	-	-	-	-	-	-	-	-

Register (Offset)	Resource	RESSEL [3:0] /PORT SEL[3:0]	Source for Resource Input							
			0	1	2	3	4	5	6	7
			8	9	10	11	12	13	14	15
RIC_RESIN453 (0x038A)	PPG19_TIN3	RESSEL (0-7)	set 0	-	-	-	-	-	-	-
		RESSEL (8-15)	-	-	-	-	-	-	-	-
		PORTSEL (0-7)	-	-	-	-	-	-	-	-
		PORTSEL (8-15)	-	-	-	-	-	-	-	-
RIC_RESIN454 (0x038C)	PPG20_TIN1	RESSEL (0-7)	PORT_PIN	TOT0	RLT0_UFSET	-	-	-	-	-
		RESSEL (8-15)	-	-	-	-	-	-	-	-
		PORTSEL (0-7)	-	-	-	-	-	-	-	-
		PORTSEL (8-15)	-	-	-	-	-	-	-	-
RIC_RESIN455 (0x038E)	PPG20_TIN2	RESSEL (0-7)	set 0	-	-	-	-	-	-	-
		RESSEL (8-15)	-	-	-	-	-	-	-	-
		PORTSEL (0-7)	-	-	-	-	-	-	-	-
		PORTSEL (8-15)	-	-	-	-	-	-	-	-
RIC_RESIN456 (0x0390)	PPG20_TIN3	RESSEL (0-7)	set 0	-	-	-	-	-	-	-
		RESSEL (8-15)	-	-	-	-	-	-	-	-
		PORTSEL (0-7)	-	-	-	-	-	-	-	-
		PORTSEL (8-15)	-	-	-	-	-	-	-	-
RIC_RESIN457 (0x0392)	PPG21_TIN1	RESSEL (0-7)	PORT_PIN	TOT0	RLT0_UFSET	-	-	-	-	-
		RESSEL (8-15)	-	-	-	-	-	-	-	-
		PORTSEL (0-7)	-	-	-	-	-	-	-	-
		PORTSEL (8-15)	-	-	-	-	-	-	-	-

Register (Offset)	Resource	RESSEL [3:0] /PORT SEL[3:0]	Source for Resource Input							
			0	1	2	3	4	5	6	7
			8	9	10	11	12	13	14	15
RIC_RESIN458 (0x0394)	PPG21_TIN2	RESSEL (0-7)	set 0	-	-	-	-	-	-	-
		RESSEL (8-15)	-	-	-	-	-	-	-	-
		PORTSEL (0-7)	-	-	-	-	-	-	-	-
		PORTSEL (8-15)	-	-	-	-	-	-	-	-
RIC_RESIN459 (0x0396)	PPG21_TIN3	RESSEL (0-7)	set 0	-	-	-	-	-	-	-
		RESSEL (8-15)	-	-	-	-	-	-	-	-
		PORTSEL (0-7)	-	-	-	-	-	-	-	-
		PORTSEL (8-15)	-	-	-	-	-	-	-	-
RIC_RESIN460 (0x0398)	PPG22_TIN1	RESSEL (0-7)	PORT_PIN	TOT0	RLT0_UFSET	-	-	-	-	-
		RESSEL (8-15)	-	-	-	-	-	-	-	-
		PORTSEL (0-7)	-	-	-	-	-	-	-	-
		PORTSEL (8-15)	-	-	-	-	-	-	-	-
RIC_RESIN461 (0x039A)	PPG22_TIN2	RESSEL (0-7)	set 0	-	-	-	-	-	-	-
		RESSEL (8-15)	-	-	-	-	-	-	-	-
		PORTSEL (0-7)	-	-	-	-	-	-	-	-
		PORTSEL (8-15)	-	-	-	-	-	-	-	-
RIC_RESIN462 (0x039C)	PPG22_TIN3	RESSEL (0-7)	set 0	-	-	-	-	-	-	-
		RESSEL (8-15)	-	-	-	-	-	-	-	-
		PORTSEL (0-7)	-	-	-	-	-	-	-	-
		PORTSEL (8-15)	-	-	-	-	-	-	-	-

Register (Offset)	Resource	RESSEL [3:0] /PORT SEL[3:0]	Source for Resource Input							
			0	1	2	3	4	5	6	7
			8	9	10	11	12	13	14	15
RIC_RESIN463 (0x039E)	PPG23_TIN1	RESSEL (0-7)	PORT_PIN	TOT0	RLT0_UFSET	-	-	-	-	-
		RESSEL (8-15)	-	-	-	-	-	-	-	-
		PORTSEL (0-7)	-	-	-	-	-	-	-	-
		PORTSEL (8-15)	-	-	-	-	-	-	-	-
RIC_RESIN464 (0x03A0)	PPG23_TIN2	RESSEL (0-7)	set 0	-	-	-	-	-	-	-
		RESSEL (8-15)	-	-	-	-	-	-	-	-
		PORTSEL (0-7)	-	-	-	-	-	-	-	-
		PORTSEL (8-15)	-	-	-	-	-	-	-	-
RIC_RESIN465 (0x03A2)	PPG23_TIN3	RESSEL (0-7)	set 0	-	-	-	-	-	-	-
		RESSEL (8-15)	-	-	-	-	-	-	-	-
		PORTSEL (0-7)	-	-	-	-	-	-	-	-
		PORTSEL (8-15)	-	-	-	-	-	-	-	-
RIC_RESIN466 (0x03A4)	PPG24_TIN1	RESSEL (0-7)	PORT_PIN	TOT0	RLT0_UFSET	-	-	-	-	-
		RESSEL (8-15)	-	-	-	-	-	-	-	-
		PORTSEL (0-7)	-	-	-	-	-	-	-	-
		PORTSEL (8-15)	-	-	-	-	-	-	-	-
RIC_RESIN467 (0x03A6)	PPG24_TIN2	RESSEL (0-7)	set 0	-	-	-	-	-	-	-
		RESSEL (8-15)	-	-	-	-	-	-	-	-
		PORTSEL (0-7)	-	-	-	-	-	-	-	-
		PORTSEL (8-15)	-	-	-	-	-	-	-	-

Register (Offset)	Resource	RESSEL [3:0] /PORT SEL[3:0]	Source for Resource Input							
			0	1	2	3	4	5	6	7
			8	9	10	11	12	13	14	15
RIC_RESIN468 (0x03A8)	PPG24_TIN3	RESSEL (0-7)	set 0	-	-	-	-	-	-	-
		RESSEL (8-15)	-	-	-	-	-	-	-	-
		PORTSEL (0-7)	-	-	-	-	-	-	-	-
		PORTSEL (8-15)	-	-	-	-	-	-	-	-
RIC_RESIN469 (0x03AA)	PPG25_TIN1	RESSEL (0-7)	PORT_PIN	TOT0	RLT0_UFSET	-	-	-	-	-
		RESSEL (8-15)	-	-	-	-	-	-	-	-
		PORTSEL (0-7)	-	-	-	-	-	-	-	-
		PORTSEL (8-15)	-	-	-	-	-	-	-	-
RIC_RESIN470 (0x03AC)	PPG25_TIN2	RESSEL (0-7)	set 0	-	-	-	-	-	-	-
		RESSEL (8-15)	-	-	-	-	-	-	-	-
		PORTSEL (0-7)	-	-	-	-	-	-	-	-
		PORTSEL (8-15)	-	-	-	-	-	-	-	-
RIC_RESIN471 (0x03AE)	PPG25_TIN3	RESSEL (0-7)	set 0	-	-	-	-	-	-	-
		RESSEL (8-15)	-	-	-	-	-	-	-	-
		PORTSEL (0-7)	-	-	-	-	-	-	-	-
		PORTSEL (8-15)	-	-	-	-	-	-	-	-
RIC_RESIN472 (0x03B0)	PPG26_TIN1	RESSEL (0-7)	PORT_PIN	TOT0	RLT0_UFSET	-	-	-	-	-
		RESSEL (8-15)	-	-	-	-	-	-	-	-
		PORTSEL (0-7)	-	-	-	-	-	-	-	-
		PORTSEL (8-15)	-	-	-	-	-	-	-	-

Register (Offset)	Resource	RESSEL [3:0] /PORT SEL[3:0]	Source for Resource Input							
			0	1	2	3	4	5	6	7
			8	9	10	11	12	13	14	15
RIC_RESIN473 (0x03B2)	PPG26_TIN2	RESSEL (0-7)	set 0	-	-	-	-	-	-	-
		RESSEL (8-15)	-	-	-	-	-	-	-	-
		PORTSEL (0-7)	-	-	-	-	-	-	-	-
		PORTSEL (8-15)	-	-	-	-	-	-	-	-
RIC_RESIN474 (0x03B4)	PPG26_TIN3	RESSEL (0-7)	set 0	-	-	-	-	-	-	-
		RESSEL (8-15)	-	-	-	-	-	-	-	-
		PORTSEL (0-7)	-	-	-	-	-	-	-	-
		PORTSEL (8-15)	-	-	-	-	-	-	-	-
RIC_RESIN475 (0x03B6)	PPG27_TIN1	RESSEL (0-7)	PORT_PIN	TOT0	RLT0_UFSET	-	-	-	-	-
		RESSEL (8-15)	-	-	-	-	-	-	-	-
		PORTSEL (0-7)	-	-	-	-	-	-	-	-
		PORTSEL (8-15)	-	-	-	-	-	-	-	-
RIC_RESIN476 (0x03B8)	PPG27_TIN2	RESSEL (0-7)	set 0	-	-	-	-	-	-	-
		RESSEL (8-15)	-	-	-	-	-	-	-	-
		PORTSEL (0-7)	-	-	-	-	-	-	-	-
		PORTSEL (8-15)	-	-	-	-	-	-	-	-
RIC_RESIN477 (0x03BA)	PPG27_TIN3	RESSEL (0-7)	set 0	-	-	-	-	-	-	-
		RESSEL (8-15)	-	-	-	-	-	-	-	-
		PORTSEL (0-7)	-	-	-	-	-	-	-	-
		PORTSEL (8-15)	-	-	-	-	-	-	-	-

Register (Offset)	Resource	RESSEL [3:0] /PORT SEL[3:0]	Source for Resource Input							
			0	1	2	3	4	5	6	7
			8	9	10	11	12	13	14	15
RIC_RESIN478 (0x03BC)	PPG28_TIN1	RESSEL (0-7)	PORT_PIN	TOT0	RLT0_UFSET	-	-	-	-	-
		RESSEL (8-15)	-	-	-	-	-	-	-	-
		PORTSEL (0-7)	-	-	-	-	-	-	-	-
		PORTSEL (8-15)	-	-	-	-	-	-	-	-
RIC_RESIN479 (0x03BE)	PPG28_TIN2	RESSEL (0-7)	set 0	-	-	-	-	-	-	-
		RESSEL (8-15)	-	-	-	-	-	-	-	-
		PORTSEL (0-7)	-	-	-	-	-	-	-	-
		PORTSEL (8-15)	-	-	-	-	-	-	-	-
RIC_RESIN480 (0x03C0)	PPG28_TIN3	RESSEL (0-7)	set 0	-	-	-	-	-	-	-
		RESSEL (8-15)	-	-	-	-	-	-	-	-
		PORTSEL (0-7)	-	-	-	-	-	-	-	-
		PORTSEL (8-15)	-	-	-	-	-	-	-	-
RIC_RESIN481 (0x03C2)	PPG29_TIN1	RESSEL (0-7)	PORT_PIN	TOT0	RLT0_UFSET	-	-	-	-	-
		RESSEL (8-15)	-	-	-	-	-	-	-	-
		PORTSEL (0-7)	-	-	-	-	-	-	-	-
		PORTSEL (8-15)	-	-	-	-	-	-	-	-
RIC_RESIN482 (0x03C4)	PPG29_TIN2	RESSEL (0-7)	set 0	-	-	-	-	-	-	-
		RESSEL (8-15)	-	-	-	-	-	-	-	-
		PORTSEL (0-7)	-	-	-	-	-	-	-	-
		PORTSEL (8-15)	-	-	-	-	-	-	-	-

Register (Offset)	Resource	RESSEL [3:0] /PORT SEL[3:0]	Source for Resource Input							
			0	1	2	3	4	5	6	7
			8	9	10	11	12	13	14	15
RIC_RESIN483 (0x03C6)	PPG29_TIN3	RESSEL (0-7)	set 0	-	-	-	-	-	-	-
		RESSEL (8-15)	-	-	-	-	-	-	-	-
		PORTSEL (0-7)	-	-	-	-	-	-	-	-
		PORTSEL (8-15)	-	-	-	-	-	-	-	-
RIC_RESIN484 (0x03C8)	PPG30_TIN1	RESSEL (0-7)	PORT_PIN	TOT0	RLT0_UFSET	-	-	-	-	-
		RESSEL (8-15)	-	-	-	-	-	-	-	-
		PORTSEL (0-7)	-	-	-	-	-	-	-	-
		PORTSEL (8-15)	-	-	-	-	-	-	-	-
RIC_RESIN485 (0x03CA)	PPG30_TIN2	RESSEL (0-7)	set 0	-	-	-	-	-	-	-
		RESSEL (8-15)	-	-	-	-	-	-	-	-
		PORTSEL (0-7)	-	-	-	-	-	-	-	-
		PORTSEL (8-15)	-	-	-	-	-	-	-	-
RIC_RESIN486 (0x03CC)	PPG30_TIN3	RESSEL (0-7)	set 0	-	-	-	-	-	-	-
		RESSEL (8-15)	-	-	-	-	-	-	-	-
		PORTSEL (0-7)	-	-	-	-	-	-	-	-
		PORTSEL (8-15)	-	-	-	-	-	-	-	-
RIC_RESIN487 (0x03CE)	PPG31_TIN1	RESSEL (0-7)	PORT_PIN	TOT0	RLT0_UFSET	-	-	-	-	-
		RESSEL (8-15)	-	-	-	-	-	-	-	-
		PORTSEL (0-7)	-	-	-	-	-	-	-	-
		PORTSEL (8-15)	-	-	-	-	-	-	-	-

Register (Offset)	Resource	RESSEL [3:0] /PORT SEL[3:0]	Source for Resource Input							
			0	1	2	3	4	5	6	7
			8	9	10	11	12	13	14	15
RIC_RESIN488 (0x03D0)	PPG31_TIN2	RESSEL (0-7)	set 0	-	-	-	-	-	-	-
		RESSEL (8-15)	-	-	-	-	-	-	-	-
		PORTSEL (0-7)	-	-	-	-	-	-	-	-
		PORTSEL (8-15)	-	-	-	-	-	-	-	-
RIC_RESIN489 (0x03D2)	PPG31_TIN3	RESSEL (0-7)	set 0	-	-	-	-	-	-	-
		RESSEL (8-15)	-	-	-	-	-	-	-	-
		PORTSEL (0-7)	-	-	-	-	-	-	-	-
		PORTSEL (8-15)	-	-	-	-	-	-	-	-

Register (Offset)	Resource	RESSEL [3:0] /PORT SEL[3:0]	Source for Resource Input							
			0	1	2	3	4	5	6	7
			8	9	10	11	12	13	14	15
RIC_RESIN490 (0x03D4)	ADC12B0_HWTRG0	RESSEL (0-7)	PORT_PIN	RLT0_UFSET	RLT1_UFSET	OCU0_OTD0	OCU1_OTD0	PPG0_TOUT0	PPG1_TOUT2	PPG3_TOUT2
		RESSEL (8-15)	-	-	-	-	-	-	-	-
		PORTSEL (0-7)	-	-	-	-	-	-	-	-
		PORTSEL (8-15)	-	-	-	-	-	-	-	-
RIC_RESIN491 (0x03D6)	ADC12B0_HWTRG1	RESSEL (0-7)	PORT_PIN	RLT1_UFSET	RLT16_UFSET	OCU1_OTD0	OCU2_OTD0	PPG0_TOUT2	PPG2_TOUT0	PPG4_TOUT0
		RESSEL (8-15)	-	-	-	-	-	-	-	-
		PORTSEL (0-7)	-	-	-	-	-	-	-	-
		PORTSEL (8-15)	-	-	-	-	-	-	-	-
RIC_RESIN492 (0x03D8)	ADC12B0_HWTRG2	RESSEL (0-7)	PORT_PIN	RLT16_UFSET	RLT17_UFSET	OCU2_OTD0	OCU8_OTD0	PPG1_TOUT0	PPG2_TOUT2	PPG4_TOUT2
		RESSEL (8-15)	-	-	-	-	-	-	-	-
		PORTSEL (0-7)	-	-	-	-	-	-	-	-
		PORTSEL (8-15)	-	-	-	-	-	-	-	-
RIC_RESIN493 (0x03DA)	ADC12B0_HWTRG3	RESSEL (0-7)	PORT_PIN	RLT17_UFSET	RLT0_UFSET	OCU8_OTD0	OCU9_OTD0	PPG1_TOUT2	PPG3_TOUT0	PPG5_TOUT0
		RESSEL (8-15)	-	-	-	-	-	-	-	-
		PORTSEL (0-7)	-	-	-	-	-	-	-	-
		PORTSEL (8-15)	-	-	-	-	-	-	-	-
RIC_RESIN494 (0x03DC)	ADC12B0_HWTRG4	RESSEL (0-7)	PORT_PIN	RLT0_UFSET	RLT16_UFSET	OCU9_OTD0	OCU10_OTD0	PPG2_TOUT0	PPG3_TOUT2	PPG5_TOUT2
		RESSEL (8-15)	-	-	-	-	-	-	-	-
		PORTSEL (0-7)	-	-	-	-	-	-	-	-
		PORTSEL (8-15)	-	-	-	-	-	-	-	-

Register (Offset)	Resource	RESSEL [3:0] /PORT SEL[3:0]	Source for Resource Input							
			0	1	2	3	4	5	6	7
			8	9	10	11	12	13	14	15
RIC_RESIN495 (0x03DE)	ADC12B0_HWTRG5	RESSEL (0-7)	PORT_PIN	RLT1_UFSET	RLT17_UFSET	OCU10_OTD0	OCU0_OTD0	PPG2_TOUT2	PPG4_TOUT0	PPG6_TOUT0
		RESSEL (8-15)	-	-	-	-	-	-	-	-
		PORTSEL (0-7)	-	-	-	-	-	-	-	-
		PORTSEL (8-15)	-	-	-	-	-	-	-	-
RIC_RESIN496 (0x03E0)	ADC12B0_HWTRG6	RESSEL (0-7)	PORT_PIN	RLT16_UFSET	RLT0_UFSET	OCU0_OTD0	OCU2_OTD0	PPG3_TOUT0	PPG4_TOUT2	PPG6_TOUT2
		RESSEL (8-15)	-	-	-	-	-	-	-	-
		PORTSEL (0-7)	-	-	-	-	-	-	-	-
		PORTSEL (8-15)	-	-	-	-	-	-	-	-
RIC_RESIN497 (0x03E2)	ADC12B0_HWTRG7	RESSEL (0-7)	PORT_PIN	RLT17_UFSET	RLT1_UFSET	OCU1_OTD0	OCU8_OTD0	PPG3_TOUT2	PPG5_TOUT0	PPG7_TOUT0
		RESSEL (8-15)	-	-	-	-	-	-	-	-
		PORTSEL (0-7)	-	-	-	-	-	-	-	-
		PORTSEL (8-15)	-	-	-	-	-	-	-	-
RIC_RESIN498 (0x03E4)	ADC12B0_HWTRG8	RESSEL (0-7)	PORT_PIN	RLT0_UFSET	RLT17_UFSET	OCU2_OTD0	OCU9_OTD0	PPG4_TOUT0	PPG5_TOUT2	PPG7_TOUT2
		RESSEL (8-15)	-	-	-	-	-	-	-	-
		PORTSEL (0-7)	-	-	-	-	-	-	-	-
		PORTSEL (8-15)	-	-	-	-	-	-	-	-
RIC_RESIN499 (0x03E6)	ADC12B0_HWTRG9	RESSEL (0-7)	PORT_PIN	RLT1_UFSET	RLT0_UFSET	OCU8_OTD0	OCU10_OTD0	PPG4_TOUT2	PPG6_TOUT0	PPG8_TOUT0
		RESSEL (8-15)	-	-	-	-	-	-	-	-
		PORTSEL (0-7)	-	-	-	-	-	-	-	-
		PORTSEL (8-15)	-	-	-	-	-	-	-	-

Register (Offset)	Resource	RESSEL [3:0] /PORT SEL[3:0]	Source for Resource Input							
			0	1	2	3	4	5	6	7
			8	9	10	11	12	13	14	15
RIC_RESIN500 (0x03E8)	ADC12B0_HWTRG10	RESSEL (0-7)	PORT_PIN	RLT16_UFSET	RLT1_UFSET	OCU9_OTD0	OCU0_OTD0	PPG5_TOUT0	PPG6_TOUT2	PPG8_TOUT2
		RESSEL (8-15)	-	-	-	-	-	-	-	-
		PORTSEL (0-7)	-	-	-	-	-	-	-	-
		PORTSEL (8-15)	-	-	-	-	-	-	-	-
RIC_RESIN501 (0x03EA)	ADC12B0_HWTRG11	RESSEL (0-7)	PORT_PIN	RLT17_UFSET	RLT16_UFSET	OCU10_OTD0	OCU1_OTD0	PPG5_TOUT2	PPG7_TOUT0	PPG9_TOUT0
		RESSEL (8-15)	-	-	-	-	-	-	-	-
		PORTSEL (0-7)	-	-	-	-	-	-	-	-
		PORTSEL (8-15)	-	-	-	-	-	-	-	-
RIC_RESIN502 (0x03EC)	ADC12B0_HWTRG12	RESSEL (0-7)	PORT_PIN	RLT0_UFSET	RLT1_UFSET	OCU0_OTD0	OCU8_OTD0	PPG6_TOUT0	PPG7_TOUT2	PPG9_TOUT2
		RESSEL (8-15)	-	-	-	-	-	-	-	-
		PORTSEL (0-7)	-	-	-	-	-	-	-	-
		PORTSEL (8-15)	-	-	-	-	-	-	-	-
RIC_RESIN503 (0x03EE)	ADC12B0_HWTRG13	RESSEL (0-7)	PORT_PIN	RLT1_UFSET	RLT16_UFSET	OCU1_OTD0	OCU9_OTD0	PPG6_TOUT2	PPG8_TOUT0	PPG10_TOUT0
		RESSEL (8-15)	-	-	-	-	-	-	-	-
		PORTSEL (0-7)	-	-	-	-	-	-	-	-
		PORTSEL (8-15)	-	-	-	-	-	-	-	-
RIC_RESIN504 (0x03F0)	ADC12B0_HWTRG14	RESSEL (0-7)	PORT_PIN	RLT16_UFSET	RLT17_UFSET	OCU2_OTD0	OCU10_OTD0	PPG7_TOUT0	PPG8_TOUT2	PPG10_TOUT2
		RESSEL (8-15)	-	-	-	-	-	-	-	-
		PORTSEL (0-7)	-	-	-	-	-	-	-	-
		PORTSEL (8-15)	-	-	-	-	-	-	-	-

Register (Offset)	Resource	RESSEL [3:0] /PORT SEL[3:0]	Source for Resource Input							
			0	1	2	3	4	5	6	7
			8	9	10	11	12	13	14	15
RIC_RESIN505 (0x03F2)	ADC12B0_HWTRG15	RESSEL (0-7)	PORT_PIN	RLT17_UFSET	RLT0_UFSET	OCU8_OTD0	OCU0_OTD0	PPG7_TOUT2	PPG9_TOUT0	PPG11_TOUT0
		RESSEL (8-15)	-	-	-	-	-	-	-	-
		PORTSEL (0-7)	-	-	-	-	-	-	-	-
		PORTSEL (8-15)	-	-	-	-	-	-	-	-
RIC_RESIN506 (0x03F4)	ADC12B0_HWTRG16	RESSEL (0-7)	PORT_PIN	RLT0_UFSET	RLT16_UFSET	OCU9_OTD0	OCU1_OTD0	PPG8_TOUT0	PPG9_TOUT2	PPG11_TOUT2
		RESSEL (8-15)	-	-	-	-	-	-	-	-
		PORTSEL (0-7)	-	-	-	-	-	-	-	-
		PORTSEL (8-15)	-	-	-	-	-	-	-	-
RIC_RESIN507 (0x03F6)	ADC12B0_HWTRG17	RESSEL (0-7)	PORT_PIN	RLT1_UFSET	RLT17_UFSET	OCU10_OTD0	OCU2_OTD0	PPG8_TOUT2	PPG10_TOUT0	PPG12_TOUT0
		RESSEL (8-15)	-	-	-	-	-	-	-	-
		PORTSEL (0-7)	-	-	-	-	-	-	-	-
		PORTSEL (8-15)	-	-	-	-	-	-	-	-
RIC_RESIN508 (0x03F8)	ADC12B0_HWTRG18	RESSEL (0-7)	PORT_PIN	RLT16_UFSET	RLT0_UFSET	OCU0_OTD0	OCU9_OTD0	PPG9_TOUT0	PPG10_TOUT2	PPG12_TOUT2
		RESSEL (8-15)	-	-	-	-	-	-	-	-
		PORTSEL (0-7)	-	-	-	-	-	-	-	-
		PORTSEL (8-15)	-	-	-	-	-	-	-	-
RIC_RESIN509 (0x03FA)	ADC12B0_HWTRG19	RESSEL (0-7)	PORT_PIN	RLT17_UFSET	RLT1_UFSET	OCU1_OTD0	OCU10_OTD0	PPG9_TOUT2	PPG11_TOUT0	PPG13_TOUT0
		RESSEL (8-15)	-	-	-	-	-	-	-	-
		PORTSEL (0-7)	-	-	-	-	-	-	-	-
		PORTSEL (8-15)	-	-	-	-	-	-	-	-

Register (Offset)	Resource	RESSEL [3:0] /PORT SEL[3:0]	Source for Resource Input							
			0	1	2	3	4	5	6	7
			8	9	10	11	12	13	14	15
RIC_RESIN510 (0x03FC)	ADC12B0_HWTRG20	RESSEL (0-7)	PORT_PIN	RLT0_UFSET	RLT17_UFSET	OCU2_OTD0	OCU0_OTD0	PPG10_TOUT0	PPG11_TOUT2	PPG13_TOUT2
		RESSEL (8-15)	-	-	-	-	-	-	-	-
		PORTSEL (0-7)	-	-	-	-	-	-	-	-
		PORTSEL (8-15)	-	-	-	-	-	-	-	-
RIC_RESIN511 (0x03FE)	ADC12B0_HWTRG21	RESSEL (0-7)	PORT_PIN	RLT1_UFSET	RLT0_UFSET	OCU8_OTD0	OCU1_OTD0	PPG10_TOUT2	PPG12_TOUT0	PPG14_TOUT0
		RESSEL (8-15)	-	-	-	-	-	-	-	-
		PORTSEL (0-7)	-	-	-	-	-	-	-	-
		PORTSEL (8-15)	-	-	-	-	-	-	-	-
RIC_RESIN512 (0x0400)	ADC12B0_HWTRG22	RESSEL (0-7)	PORT_PIN	RLT16_UFSET	RLT1_UFSET	OCU9_OTD0	OCU2_OTD0	PPG11_TOUT0	PPG12_TOUT2	PPG14_TOUT2
		RESSEL (8-15)	-	-	-	-	-	-	-	-
		PORTSEL (0-7)	-	-	-	-	-	-	-	-
		PORTSEL (8-15)	-	-	-	-	-	-	-	-
RIC_RESIN513 (0x0402)	ADC12B0_HWTRG23	RESSEL (0-7)	PORT_PIN	RLT17_UFSET	RLT16_UFSET	OCU10_OTD0	OCU8_OTD0	PPG11_TOUT2	PPG13_TOUT0	PPG15_TOUT0
		RESSEL (8-15)	-	-	-	-	-	-	-	-
		PORTSEL (0-7)	-	-	-	-	-	-	-	-
		PORTSEL (8-15)	-	-	-	-	-	-	-	-
RIC_RESIN514 (0x0404)	ADC12B0_HWTRG24	RESSEL (0-7)	PORT_PIN	RLT0_UFSET	RLT1_UFSET	OCU0_OTD0	OCU10_OTD0	PPG12_TOUT0	PPG13_TOUT2	PPG15_TOUT2
		RESSEL (8-15)	-	-	-	-	-	-	-	-
		PORTSEL (0-7)	-	-	-	-	-	-	-	-
		PORTSEL (8-15)	-	-	-	-	-	-	-	-

Register (Offset)	Resource	RESSEL [3:0] /PORT SEL[3:0]	Source for Resource Input							
			0	1	2	3	4	5	6	7
			8	9	10	11	12	13	14	15
RIC_RESIN515 (0x0406)	ADC12B0_HWTRG25	RESSEL (0-7)	PORT_PIN	RLT1_UFSET	RLT16_UFSET	OCU1_OTD0	OCU0_OTD0	PPG12_TOUT2	PPG14_TOUT0	PPG16_TOUT0
		RESSEL (8-15)	-	-	-	-	-	-	-	-
		PORTSEL (0-7)	-	-	-	-	-	-	-	-
		PORTSEL (8-15)	-	-	-	-	-	-	-	-
RIC_RESIN516 (0x0408)	ADC12B0_HWTRG26	RESSEL (0-7)	PORT_PIN	RLT16_UFSET	RLT17_UFSET	OCU2_OTD0	OCU1_OTD0	PPG13_TOUT0	PPG14_TOUT2	PPG16_TOUT2
		RESSEL (8-15)	-	-	-	-	-	-	-	-
		PORTSEL (0-7)	-	-	-	-	-	-	-	-
		PORTSEL (8-15)	-	-	-	-	-	-	-	-
RIC_RESIN517 (0x040A)	ADC12B0_HWTRG27	RESSEL (0-7)	PORT_PIN	RLT17_UFSET	RLT0_UFSET	OCU8_OTD0	OCU2_OTD0	PPG13_TOUT2	PPG15_TOUT0	PPG17_TOUT0
		RESSEL (8-15)	-	-	-	-	-	-	-	-
		PORTSEL (0-7)	-	-	-	-	-	-	-	-
		PORTSEL (8-15)	-	-	-	-	-	-	-	-
RIC_RESIN518 (0x040C)	ADC12B0_HWTRG28	RESSEL (0-7)	PORT_PIN	RLT0_UFSET	RLT16_UFSET	OCU9_OTD0	OCU8_OTD0	PPG14_TOUT0	PPG15_TOUT2	PPG17_TOUT2
		RESSEL (8-15)	-	-	-	-	-	-	-	-
		PORTSEL (0-7)	-	-	-	-	-	-	-	-
		PORTSEL (8-15)	-	-	-	-	-	-	-	-
RIC_RESIN519 (0x040E)	ADC12B0_HWTRG29	RESSEL (0-7)	PORT_PIN	RLT1_UFSET	RLT17_UFSET	OCU10_OTD0	OCU9_OTD0	PPG14_TOUT2	PPG16_TOUT0	PPG18_TOUT0
		RESSEL (8-15)	-	-	-	-	-	-	-	-
		PORTSEL (0-7)	-	-	-	-	-	-	-	-
		PORTSEL (8-15)	-	-	-	-	-	-	-	-

Register (Offset)	Resource	RESSEL [3:0] /PORT SEL[3:0]	Source for Resource Input							
			0	1	2	3	4	5	6	7
			8	9	10	11	12	13	14	15
RIC_RESIN520 (0x0410)	ADC12B0_HWTRG30	RESSEL (0-7)	PORT_PIN	RLT16_UFSET	RLT0_UFSET	OCU0_OTD0	OCU1_OTD0	PPG15_TOUT0	PPG16_TOUT2	PPG18_TOUT2
		RESSEL (8-15)	-	-	-	-	-	-	-	-
		PORTSEL (0-7)	-	-	-	-	-	-	-	-
		PORTSEL (8-15)	-	-	-	-	-	-	-	-
RIC_RESIN521 (0x0412)	ADC12B0_HWTRG31	RESSEL (0-7)	PORT_PIN	RLT17_UFSET	RLT1_UFSET	OCU1_OTD0	OCU2_OTD0	PPG15_TOUT2	PPG17_TOUT0	PPG19_TOUT0
		RESSEL (8-15)	-	-	-	-	-	-	-	-
		PORTSEL (0-7)	-	-	-	-	-	-	-	-
		PORTSEL (8-15)	-	-	-	-	-	-	-	-
RIC_RESIN586 (0x0494)	ADC12B1_HWTRG32	RESSEL (0-7)	PORT_PIN	RLT0_UFSET	RLT17_UFSET	OCU2_OTD0	OCU8_OTD0	PPG16_TOUT0	PPG17_TOUT2	PPG19_TOUT2
		RESSEL (8-15)	-	-	-	-	-	-	-	-
		PORTSEL (0-7)	-	-	-	-	-	-	-	-
		PORTSEL (8-15)	-	-	-	-	-	-	-	-
RIC_RESIN587 (0x0496)	ADC12B1_HWTRG33	RESSEL (0-7)	PORT_PIN	RLT1_UFSET	RLT0_UFSET	OCU8_OTD0	OCU9_OTD0	PPG16_TOUT2	PPG18_TOUT0	PPG20_TOUT0
		RESSEL (8-15)	-	-	-	-	-	-	-	-
		PORTSEL (0-7)	-	-	-	-	-	-	-	-
		PORTSEL (8-15)	-	-	-	-	-	-	-	-
RIC_RESIN588 (0x0498)	ADC12B1_HWTRG34	RESSEL (0-7)	PORT_PIN	RLT16_UFSET	RLT1_UFSET	OCU9_OTD0	OCU10_OTD0	PPG17_TOUT0	PPG18_TOUT2	PPG20_TOUT2
		RESSEL (8-15)	-	-	-	-	-	-	-	-
		PORTSEL (0-7)	-	-	-	-	-	-	-	-
		PORTSEL (8-15)	-	-	-	-	-	-	-	-

Register (Offset)	Resource	RESSEL [3:0] /PORT SEL[3:0]	Source for Resource Input							
			0	1	2	3	4	5	6	7
			8	9	10	11	12	13	14	15
RIC_RESIN589 (0x049A)	ADC12B1_HWTRG35	RESSEL (0-7)	PORT_PIN	RLT17_UFSET	RLT16_UFSET	OCU10_OTD0	OCU0_OTD0	PPG17_TOUT2	PPG19_TOUT0	PPG21_TOUT0
		RESSEL (8-15)	-	-	-	-	-	-	-	-
		PORTSEL (0-7)	-	-	-	-	-	-	-	-
		PORTSEL (8-15)	-	-	-	-	-	-	-	-
RIC_RESIN590 (0x049C)	ADC12B1_HWTRG36	RESSEL (0-7)	PORT_PIN	RLT0_UFSET	RLT1_UFSET	OCU0_OTD0	OCU2_OTD0	PPG18_TOUT0	PPG19_TOUT2	PPG21_TOUT2
		RESSEL (8-15)	-	-	-	-	-	-	-	-
		PORTSEL (0-7)	-	-	-	-	-	-	-	-
		PORTSEL (8-15)	-	-	-	-	-	-	-	-
RIC_RESIN591 (0x049E)	ADC12B1_HWTRG37	RESSEL (0-7)	PORT_PIN	RLT1_UFSET	RLT16_UFSET	OCU1_OTD0	OCU8_OTD0	PPG18_TOUT2	PPG20_TOUT0	PPG22_TOUT0
		RESSEL (8-15)	-	-	-	-	-	-	-	-
		PORTSEL (0-7)	-	-	-	-	-	-	-	-
		PORTSEL (8-15)	-	-	-	-	-	-	-	-
RIC_RESIN592 (0x04A0)	ADC12B1_HWTRG38	RESSEL (0-7)	PORT_PIN	RLT16_UFSET	RLT17_UFSET	OCU2_OTD0	OCU9_OTD0	PPG19_TOUT0	PPG20_TOUT2	PPG22_TOUT2
		RESSEL (8-15)	-	-	-	-	-	-	-	-
		PORTSEL (0-7)	-	-	-	-	-	-	-	-
		PORTSEL (8-15)	-	-	-	-	-	-	-	-
RIC_RESIN593 (0x04A2)	ADC12B1_HWTRG39	RESSEL (0-7)	PORT_PIN	RLT17_UFSET	RLT0_UFSET	OCU8_OTD0	OCU10_OTD0	PPG19_TOUT2	PPG21_TOUT0	PPG23_TOUT0
		RESSEL (8-15)	-	-	-	-	-	-	-	-
		PORTSEL (0-7)	-	-	-	-	-	-	-	-
		PORTSEL (8-15)	-	-	-	-	-	-	-	-

Register (Offset)	Resource	RESSEL [3:0] /PORT SEL[3:0]	Source for Resource Input							
			0	1	2	3	4	5	6	7
			8	9	10	11	12	13	14	15
RIC_RESIN594 (0x04A4)	ADC12B1_HWTRG40	RESSEL (0-7)	PORT_PIN	RLT0_UFSET	RLT16_UFSET	OCU9_OTD0	OCU0_OTD0	PPG20_TOUT0	PPG21_TOUT2	PPG23_TOUT2
		RESSEL (8-15)	-	-	-	-	-	-	-	-
		PORTSEL (0-7)	-	-	-	-	-	-	-	-
		PORTSEL (8-15)	-	-	-	-	-	-	-	-
RIC_RESIN595 (0x04A6)	ADC12B1_HWTRG41	RESSEL (0-7)	PORT_PIN	RLT1_UFSET	RLT17_UFSET	OCU10_OTD0	OCU1_OTD0	PPG20_TOUT2	PPG22_TOUT0	PPG24_TOUT0
		RESSEL (8-15)	-	-	-	-	-	-	-	-
		PORTSEL (0-7)	-	-	-	-	-	-	-	-
		PORTSEL (8-15)	-	-	-	-	-	-	-	-
RIC_RESIN596 (0x04A8)	ADC12B1_HWTRG42	RESSEL (0-7)	PORT_PIN	RLT16_UFSET	RLT0_UFSET	OCU0_OTD0	OCU8_OTD0	PPG21_TOUT0	PPG22_TOUT2	PPG24_TOUT2
		RESSEL (8-15)	-	-	-	-	-	-	-	-
		PORTSEL (0-7)	-	-	-	-	-	-	-	-
		PORTSEL (8-15)	-	-	-	-	-	-	-	-
RIC_RESIN597 (0x04AA)	ADC12B1_HWTRG43	RESSEL (0-7)	PORT_PIN	RLT17_UFSET	RLT1_UFSET	OCU1_OTD0	OCU9_OTD0	PPG21_TOUT2	PPG23_TOUT0	PPG25_TOUT0
		RESSEL (8-15)	-	-	-	-	-	-	-	-
		PORTSEL (0-7)	-	-	-	-	-	-	-	-
		PORTSEL (8-15)	-	-	-	-	-	-	-	-
RIC_RESIN598 (0x04AC)	ADC12B1_HWTRG44	RESSEL (0-7)	PORT_PIN	RLT0_UFSET	RLT17_UFSET	OCU2_OTD0	OCU10_OTD0	PPG22_TOUT0	PPG23_TOUT2	PPG25_TOUT2
		RESSEL (8-15)	-	-	-	-	-	-	-	-
		PORTSEL (0-7)	-	-	-	-	-	-	-	-
		PORTSEL (8-15)	-	-	-	-	-	-	-	-

Register (Offset)	Resource	RESSEL [3:0] /PORT SEL[3:0]	Source for Resource Input							
			0	1	2	3	4	5	6	7
			8	9	10	11	12	13	14	15
RIC_RESIN599 (0x04AE)	ADC12B1_HWTRG45	RESSEL (0-7)	PORT_PIN	RLT1_UFSET	RLT0_UFSET	OCU8_OTD0	OCU0_OTD0	PPG22_TOUT2	PPG24_TOUT0	PPG26_TOUT0
		RESSEL (8-15)	-	-	-	-	-	-	-	-
		PORTSEL (0-7)	-	-	-	-	-	-	-	-
		PORTSEL (8-15)	-	-	-	-	-	-	-	-
RIC_RESIN600 (0x04B0)	ADC12B1_HWTRG46	RESSEL (0-7)	PORT_PIN	RLT16_UFSET	RLT1_UFSET	OCU9_OTD0	OCU1_OTD0	PPG23_TOUT0	PPG24_TOUT2	PPG26_TOUT2
		RESSEL (8-15)	-	-	-	-	-	-	-	-
		PORTSEL (0-7)	-	-	-	-	-	-	-	-
		PORTSEL (8-15)	-	-	-	-	-	-	-	-
RIC_RESIN601 (0x04B2)	ADC12B1_HWTRG47	RESSEL (0-7)	PORT_PIN	RLT17_UFSET	RLT16_UFSET	OCU10_OTD0	OCU2_OTD0	PPG23_TOUT2	PPG25_TOUT0	PPG27_TOUT0
		RESSEL (8-15)	-	-	-	-	-	-	-	-
		PORTSEL (0-7)	-	-	-	-	-	-	-	-
		PORTSEL (8-15)	-	-	-	-	-	-	-	-
RIC_RESIN602 (0x04B4)	ADC12B1_HWTRG48	RESSEL (0-7)	PORT_PIN	RLT0_UFSET	RLT1_UFSET	OCU0_OTD0	OCU9_OTD0	PPG24_TOUT0	PPG25_TOUT2	PPG27_TOUT2
		RESSEL (8-15)	-	-	-	-	-	-	-	-
		PORTSEL (0-7)	-	-	-	-	-	-	-	-
		PORTSEL (8-15)	-	-	-	-	-	-	-	-
RIC_RESIN603 (0x04B6)	ADC12B1_HWTRG49	RESSEL (0-7)	PORT_PIN	RLT1_UFSET	RLT16_UFSET	OCU1_OTD0	OCU10_OTD0	PPG24_TOUT2	PPG26_TOUT0	PPG28_TOUT0
		RESSEL (8-15)	-	-	-	-	-	-	-	-
		PORTSEL (0-7)	-	-	-	-	-	-	-	-
		PORTSEL (8-15)	-	-	-	-	-	-	-	-

Register (Offset)	Resource	RESSEL [3:0] /PORT SEL[3:0]	Source for Resource Input							
			0	1	2	3	4	5	6	7
			8	9	10	11	12	13	14	15
RIC_RESIN604 (0x04B8)	ADC12B1_HWTRG50	RESSEL (0-7)	PORT_PIN	RLT16_UFSET	RLT17_UFSET	OCU2_OTD0	OCU0_OTD0	PPG25_TOUT0	PPG26_TOUT2	PPG28_TOUT2
		RESSEL (8-15)	-	-	-	-	-	-	-	-
		PORTSEL (0-7)	-	-	-	-	-	-	-	-
		PORTSEL (8-15)	-	-	-	-	-	-	-	-
RIC_RESIN605 (0x04BA)	ADC12B1_HWTRG51	RESSEL (0-7)	PORT_PIN	RLT17_UFSET	RLT0_UFSET	OCU8_OTD0	OCU1_OTD0	PPG25_TOUT2	PPG27_TOUT0	PPG29_TOUT0
		RESSEL (8-15)	-	-	-	-	-	-	-	-
		PORTSEL (0-7)	-	-	-	-	-	-	-	-
		PORTSEL (8-15)	-	-	-	-	-	-	-	-
RIC_RESIN606 (0x04BC)	ADC12B1_HWTRG52	RESSEL (0-7)	PORT_PIN	RLT0_UFSET	RLT16_UFSET	OCU9_OTD0	OCU2_OTD0	PPG26_TOUT0	PPG27_TOUT2	PPG29_TOUT2
		RESSEL (8-15)	-	-	-	-	-	-	-	-
		PORTSEL (0-7)	-	-	-	-	-	-	-	-
		PORTSEL (8-15)	-	-	-	-	-	-	-	-
RIC_RESIN607 (0x04BE)	ADC12B1_HWTRG53	RESSEL (0-7)	PORT_PIN	RLT1_UFSET	RLT17_UFSET	OCU10_OTD0	OCU8_OTD0	PPG26_TOUT2	PPG28_TOUT0	PPG30_TOUT0
		RESSEL (8-15)	-	-	-	-	-	-	-	-
		PORTSEL (0-7)	-	-	-	-	-	-	-	-
		PORTSEL (8-15)	-	-	-	-	-	-	-	-
RIC_RESIN608 (0x04C0)	ADC12B1_HWTRG54	RESSEL (0-7)	PORT_PIN	RLT16_UFSET	RLT0_UFSET	OCU0_OTD0	OCU10_OTD0	PPG27_TOUT0	PPG28_TOUT2	PPG30_TOUT2
		RESSEL (8-15)	-	-	-	-	-	-	-	-
		PORTSEL (0-7)	-	-	-	-	-	-	-	-
		PORTSEL (8-15)	-	-	-	-	-	-	-	-

Register (Offset)	Resource	RESSEL [3:0] /PORT SEL[3:0]	Source for Resource Input							
			0	1	2	3	4	5	6	7
			8	9	10	11	12	13	14	15
RIC_RESIN609 (0x04C2)	ADC12B1_HWTRG55	RESSEL (0-7)	PORT_PIN	RLT17_UFSET	RLT1_UFSET	OCU1_OTD0	OCU0_OTD0	PPG27_TOUT2	PPG29_TOUT0	PPG31_TOUT0
		RESSEL (8-15)	-	-	-	-	-	-	-	-
		PORTSEL (0-7)	-	-	-	-	-	-	-	-
		PORTSEL (8-15)	-	-	-	-	-	-	-	-
RIC_RESIN610 (0x04C4)	ADC12B1_HWTRG56	RESSEL (0-7)	PORT_PIN	RLT0_UFSET	RLT17_UFSET	OCU2_OTD0	OCU1_OTD0	PPG28_TOUT0	PPG29_TOUT2	PPG31_TOUT2
		RESSEL (8-15)	-	-	-	-	-	-	-	-
		PORTSEL (0-7)	-	-	-	-	-	-	-	-
		PORTSEL (8-15)	-	-	-	-	-	-	-	-
RIC_RESIN611 (0x04C6)	ADC12B1_HWTRG57	RESSEL (0-7)	PORT_PIN	RLT1_UFSET	RLT0_UFSET	OCU8_OTD0	OCU2_OTD0	PPG28_TOUT2	PPG30_TOUT0	PPG0_TOUT0
		RESSEL (8-15)	-	-	-	-	-	-	-	-
		PORTSEL (0-7)	-	-	-	-	-	-	-	-
		PORTSEL (8-15)	-	-	-	-	-	-	-	-
RIC_RESIN612 (0x04C8)	ADC12B1_HWTRG58	RESSEL (0-7)	PORT_PIN	RLT16_UFSET	RLT1_UFSET	OCU9_OTD0	OCU8_OTD0	PPG29_TOUT0	PPG30_TOUT2	PPG0_TOUT2
		RESSEL (8-15)	-	-	-	-	-	-	-	-
		PORTSEL (0-7)	-	-	-	-	-	-	-	-
		PORTSEL (8-15)	-	-	-	-	-	-	-	-
RIC_RESIN613 (0x04CA)	ADC12B1_HWTRG59	RESSEL (0-7)	PORT_PIN	RLT17_UFSET	RLT16_UFSET	OCU10_OTD0	OCU9_OTD0	PPG29_TOUT2	PPG31_TOUT0	PPG1_TOUT0
		RESSEL (8-15)	-	-	-	-	-	-	-	-
		PORTSEL (0-7)	-	-	-	-	-	-	-	-
		PORTSEL (8-15)	-	-	-	-	-	-	-	-

Register (Offset)	Resource	RESSEL [3:0] /PORT SEL[3:0]	Source for Resource Input							
			0	1	2	3	4	5	6	7
			8	9	10	11	12	13	14	15
RIC_RESIN614 (0x04CC)	ADC12B1_HWTRG60	RESSEL (0-7)	PORT_PIN	RLT0_UFSET	RLT1_UFSET	OCU0_OTD0	OCU1_OTD0	PPG30_TOUT0	PPG31_TOUT2	PPG1_TOUT2
		RESSEL (8-15)	-	-	-	-	-	-	-	-
		PORTSEL (0-7)	-	-	-	-	-	-	-	-
		PORTSEL (8-15)	-	-	-	-	-	-	-	-
RIC_RESIN615 (0x04CE)	ADC12B1_HWTRG61	RESSEL (0-7)	PORT_PIN	RLT1_UFSET	RLT16_UFSET	OCU1_OTD0	OCU2_OTD0	PPG30_TOUT2	PPG0_TOUT0	PPG2_TOUT0
		RESSEL (8-15)	-	-	-	-	-	-	-	-
		PORTSEL (0-7)	-	-	-	-	-	-	-	-
		PORTSEL (8-15)	-	-	-	-	-	-	-	-
RIC_RESIN616 (0x04D0)	ADC12B1_HWTRG62	RESSEL (0-7)	PORT_PIN	RLT16_UFSET	RLT17_UFSET	OCU2_OTD0	OCU8_OTD0	PPG31_TOUT0	PPG0_TOUT2	PPG2_TOUT2
		RESSEL (8-15)	-	-	-	-	-	-	-	-
		PORTSEL (0-7)	-	-	-	-	-	-	-	-
		PORTSEL (8-15)	-	-	-	-	-	-	-	-
RIC_RESIN617 (0x04D2)	ADC12B1_HWTRG63	RESSEL (0-7)	PORT_PIN	RLT17_UFSET	RLT0_UFSET	OCU8_OTD0	OCU9_OTD0	PPG31_TOUT2	PPG1_TOUT0	PPG3_TOUT0
		RESSEL (8-15)	-	-	-	-	-	-	-	-
		PORTSEL (0-7)	-	-	-	-	-	-	-	-
		PORTSEL (8-15)	-	-	-	-	-	-	-	-

Register (Offset)	Resource	RESSEL [3:0] /PORT SEL[3:0]	Source for Resource Input							
			0	1	2	3	4	5	6	7
			8	9	10	11	12	13	14	15
RIC_RESIN626 (0x04E4)	DDRHSSPI_MSTART	RESSEL (0-7)	-	TOT0	TOT16	-	-	-	-	-
		RESSEL (8-15)	-	-	-	-	-	-	-	-
		PORTSEL (0-7)	-	-	-	-	-	-	-	-
		PORTSEL (8-15)	-	-	-	-	-	-	-	-
RIC_RESIN629 (0x04EA)	MDIO	RESSEL (0-7)	-	-	-	-	-	-	-	-
		RESSEL (8-15)	-	-	-	-	-	-	-	-
		PORTSEL (0-7)	P0_31	P3_06	-	-	-	-	-	-
		PORTSEL (8-15)	-	-	-	-	-	-	-	-
RIC_RESIN630 (0x04EC)	CRS	RESSEL (0-7)	-	-	-	-	-	-	-	-
		RESSEL (8-15)	-	-	-	-	-	-	-	-
		PORTSEL (0-7)	P1_02	P0_20	-	-	-	-	-	-
		PORTSEL (8-15)	-	-	-	-	-	-	-	-
RIC_RESIN631 (0x04EE)	RXD0	RESSEL (0-7)	-	-	-	-	-	-	-	-
		RESSEL (8-15)	-	-	-	-	-	-	-	-
		PORTSEL (0-7)	P0_27	P3_04	-	-	-	-	-	-
		PORTSEL (8-15)	-	-	-	-	-	-	-	-
RIC_RESIN632 (0x04F0)	RXD1	RESSEL (0-7)	-	-	-	-	-	-	-	-
		RESSEL (8-15)	-	-	-	-	-	-	-	-
		PORTSEL (0-7)	P0_28	P4_06	-	-	-	-	-	-
		PORTSEL (8-15)	-	-	-	-	-	-	-	-

Register (Offset)	Resource	RESSEL [3:0] /PORT SEL[3:0]	Source for Resource Input							
			0	1	2	3	4	5	6	7
			8	9	10	11	12	13	14	15
RIC_RESIN633 (0x04F2)	RXD2	RESSEL (0-7)	-	-	-	-	-	-	-	-
		RESSEL (8-15)	-	-	-	-	-	-	-	-
		PORTSEL (0-7)	P0_29	P4_07	-	-	-	-	-	-
		PORTSEL (8-15)	-	-	-	-	-	-	-	-
RIC_RESIN634 (0x04F4)	RXD3	RESSEL (0-7)	-	-	-	-	-	-	-	-
		RESSEL (8-15)	-	-	-	-	-	-	-	-
		PORTSEL (0-7)	P0_30	P3_05	-	-	-	-	-	-
		PORTSEL (8-15)	-	-	-	-	-	-	-	-
RIC_RESIN635 (0x04F6)	COL	RESSEL (0-7)	-	-	-	-	-	-	-	-
		RESSEL (8-15)	-	-	-	-	-	-	-	-
		PORTSEL (0-7)	P1_01	P0_19	-	-	-	-	-	-
		PORTSEL (8-15)	-	-	-	-	-	-	-	-
RIC_RESIN636 (0x04F8)	RXDV	RESSEL (0-7)	-	-	-	-	-	-	-	-
		RESSEL (8-15)	-	-	-	-	-	-	-	-
		PORTSEL (0-7)	P0_19	P4_02	-	-	-	-	-	-
		PORTSEL (8-15)	-	-	-	-	-	-	-	-
RIC_RESIN637 (0x04FA)	RXER	RESSEL (0-7)	-	-	-	-	-	-	-	-
		RESSEL (8-15)	-	-	-	-	-	-	-	-
		PORTSEL (0-7)	P0_18	P4_01	-	-	-	-	-	-
		PORTSEL (8-15)	-	-	-	-	-	-	-	-

Register (Offset)	Resource	RESSEL [3:0] /PORT SEL[3:0]	Source for Resource Input							
			0	1	2	3	4	5	6	7
			8	9	10	11	12	13	14	15
RIC_RESIN638 (0x04FC)	RXCLK	RESSEL (0-7)	-	-	-	-	-	-	-	-
		RESSEL (8-15)	-	-	-	-	-	-	-	-
		PORTSEL (0-7)	P0_17	P4_00	-	-	-	-	-	-
		PORTSEL (8-15)	-	-	-	-	-	-	-	-
RIC_RESIN639 (0x04FE)	TXCLK	RESSEL (0-7)	-	-	-	-	-	-	-	-
		RESSEL (8-15)	-	-	-	-	-	-	-	-
		PORTSEL (0-7)	P0_20	P4_03	-	-	-	-	-	-
		PORTSEL (8-15)	-	-	-	-	-	-	-	-
RIC_RESIN685 (0x055A)	ADTRG0	RESSEL (0-7)	-	-	-	-	-	-	-	-
		RESSEL (8-15)	-	-	-	-	-	-	-	-
		PORTSEL (0-7)	P1_16	P2_10	-	-	-	-	-	-
		PORTSEL (8-15)	-	-	-	-	-	-	-	-
RIC_RESIN686 (0x055C)	ADTRG1	RESSEL (0-7)	-	-	-	-	-	-	-	-
		RESSEL (8-15)	-	-	-	-	-	-	-	-
		PORTSEL (0-7)	P4_22	P1_08	P2_11	-	-	-	-	-
		PORTSEL (8-15)	-	-	-	-	-	-	-	-

Notes:

- *When both GPIO_PORTEN.GPORTEN and PPC_PCFGR.PIE are configured as 0, the input signal is disconnected and external interrupt cannot be detected. During disconnecting, I/O internally outputs "low" to internal logic, and if ELVR is configured as low-level-detection, falling-edge-detection, or both-edge-detection it will be detected as external interrupt with EIRR=1.*
- *"Set 0" (Set 1) means that "0" ("1") is inputted.*
- *OCUx_MODn is described as MODn pin in TRAVEO™ T1G Platform Hardware Manual.*

7.2 Port Output Function Configuration

The port output function configuration (POF) is a function to select a function to output to a port.

A resource which supports a port output relocation has its PPC_PCFGR.POF to configure resource output.

7.2.1 Standard Configuration

Register (Offset)	Port	Resource Functional Outputs							
		POF=0	POF=1	POF=2	POF=3	POF=4	POF=5	POF=6	POF=7
PPC_PCFGR000 (0x0000)	P0_00	GPIO_PODR0:POD00	-	-	-	-	-	-	MAD1
PPC_PCFGR001 (0x0002)	P0_01	GPIO_PODR0:POD01	-	-	-	-	-	-	MAD2
PPC_PCFGR002 (0x0004)	P0_02	GPIO_PODR0:POD02	SCK1_0	-	-	-	-	SCL1	MAD3
PPC_PCFGR003 (0x0006)	P0_03	GPIO_PODR0:POD03	SOT1_0	-	-	-	-	SDA1	MAD4
PPC_PCFGR004 (0x0008)	P0_04	GPIO_PODR0:POD04	SCS10_0	-	-	-	-	-	MAD5
PPC_PCFGR005 (0x000A)	P0_05	GPIO_PODR0:POD05	SCS11_0	-	-	-	-	SOT0_1	MAD6
PPC_PCFGR006 (0x000C)	P0_06	GPIO_PODR0:POD06	SCS12_0	-	SCK0_1	-	-	PPG0_TOUT0_1	MAD7
PPC_PCFGR007 (0x000E)	P0_07	GPIO_PODR0:POD07	SCS13_0	-	SCS00_1	-	-	PPG0_TOUT2_1	MAD8
PPC_PCFGR008 (0x0010)	P0_08	GPIO_PODR0:POD08	-	-	-	-	-	PPG1_TOUT0_1	MAD9
PPC_PCFGR009 (0x0012)	P0_09	GPIO_PODR0:POD09	-	-	-	-	-	PPG1_TOUT2_1	MAD10
PPC_PCFGR010 (0x0014)	P0_10	GPIO_PODR0:POD10	SCS171_1	-	-	-	-	PPG2_TOUT0_1	MAD11
PPC_PCFGR011 (0x0016)	P0_11	GPIO_PODR0:POD11	-	-	-	-	-	PPG2_TOUT2_1	MAD12
PPC_PCFGR012 (0x0018)	P0_12	GPIO_PODR0:POD12	-	-	-	-	-	PPG3_TOUT0_1	MAD13
PPC_PCFGR013 (0x001A)	P0_13	GPIO_PODR0:POD13	-	-	-	-	-	PPG3_TOUT2_1	MAD14

Register (Offset)	Port	Resource Functional Outputs							
		POF=0	POF=1	POF=2	POF=3	POF=4	POF=5	POF=6	POF=7
PPC_PCFGR014 (0x001C)	P0_14	GPIO_PODR0:POD14	-	-	-	-	-	SCK4_1	MOEX
PPC_PCFGR015 (0x001E)	P0_15	GPIO_PODR0:POD15	-	-	-	-	-	SCS40_1	MWEX
PPC_PCFGR016 (0x0020)	P0_16	GPIO_PODR0:POD16	-	-	-	-	-	SCS41_1	MCLK
PPC_PCFGR017 (0x0022)	P0_17	GPIO_PODR0:POD17	-	-	-	-	-	SCS43_1	MDQM0
PPC_PCFGR018 (0x0024)	P0_18	GPIO_PODR0:POD18	-	-	-	MDC_1	-	-	MCSX2
PPC_PCFGR019 (0x0026)	P0_19	GPIO_PODR0:POD19	-	-	-	-	-	-	MCSX3
PPC_PCFGR020 (0x0028)	P0_20	GPIO_PODR0:POD20	-	-	-	-	-	-	-
PPC_PCFGR021 (0x002A)	P0_21	GPIO_PODR0:POD21	-	M_SDATA0_0	TXEN_0	M_DQ3	-	-	-
PPC_PCFGR022 (0x002C)	P0_22	GPIO_PODR0:POD22	SCK2_0	M_SDATA0_2	TXD0_0	M_DQ2	SOT9_2	-	-
PPC_PCFGR023 (0x002E)	P0_23	GPIO_PODR0:POD23	SOT2_0	M_SDATA0_1	TXD1_0	M_DQ1	SCK9_2	-	-
PPC_PCFGR024 (0x0030)	P0_24	GPIO_PODR0:POD24	SCS20_0	M_SSEL0	TXD2_0	M_DQ0	SCS90_2	-	-
PPC_PCFGR025 (0x0032)	P0_25	GPIO_PODR0:POD25	SCS21_0	M_SDATA0_3	TXD3_0	M_CS#_1	SCS91_2	-	-
PPC_PCFGR026 (0x0034)	P0_26	GPIO_PODR0:POD26	SCS22_0	M_SCLK0	TXER_0	M_CK	-	-	-
PPC_PCFGR027 (0x0036)	P0_27	GPIO_PODR0:POD27	SCS23_0	M_SDATA1_0	-	M_RWDS	-	-	-
PPC_PCFGR028 (0x0038)	P0_28	GPIO_PODR0:POD28	-	M_SDATA1_2	-	M_DQ4	SCK8_2	-	-

Register (Offset)	Port	Resource Functional Outputs							
		POF=0	POF=1	POF=2	POF=3	POF=4	POF=5	POF=6	POF=7
PPC_PCFGR029 (0x003A)	P0_29	GPIO_PODR0:POD29	SCK3_0	M_SDATA1_1	-	M_DQ5	SOT8_2	-	-
PPC_PCFGR030 (0x003C)	P0_30	GPIO_PODR0:POD30	SOT3_0	M_SSEL1	-	M_DQ6	SCS80_2	-	-
PPC_PCFGR031 (0x003E)	P0_31	GPIO_PODR0:POD31	SCS30_0	M_SDATA1_3	MDIO_0	M_DQ7	-	-	-
PPC_PCFGR100 (0x0040)	P1_00	GPIO_PODR1:POD00	SCS31_0	-	MDC_0	M_CS#_2	-	-	-
PPC_PCFGR101 (0x0042)	P1_01	GPIO_PODR1:POD01	SCS32_0	-	-	-	-	-	-
PPC_PCFGR102 (0x0044)	P1_02	GPIO_PODR1:POD02	SCS33_0	-	-	-	-	-	-
PPC_PCFGR103 (0x0046)	P1_03	GPIO_PODR1:POD03	-	-	-	OCU0_OTD0_0	-	PPG0_TOUT0_0	-
PPC_PCFGR104 (0x0048)	P1_04	GPIO_PODR1:POD04	SCK0_0	-	SCL0	OCU0_OTD1_0	TOT0_0	PPG0_TOUT2_0	-
PPC_PCFGR105 (0x004A)	P1_05	GPIO_PODR1:POD05	SOT0_0	-	SDA0	TRACE0_0	-	PPG1_TOUT0_0	-
PPC_PCFGR106 (0x004C)	P1_06	GPIO_PODR1:POD06	SCS00_0	-	TX0_0	TRACE1_0	TOT1_0	PPG1_TOUT2_0	-
PPC_PCFGR107 (0x004E)	P1_07	GPIO_PODR1:POD07	-	-	TRACE2_0	OCU1_OTD0_0	-	PPG2_TOUT0_0	-
PPC_PCFGR108 (0x0050)	P1_08	GPIO_PODR1:POD08	TRACE3_0	-	TX1_0	OCU1_OTD1_0	TOT16_0	PPG2_TOUT2_0	-
PPC_PCFGR109 (0x0052)	P1_09	GPIO_PODR1:POD09	SCK16_0	-	SCL16	OCU2_OTD0_0	TRACE_CTL_0	PPG3_TOUT0_0	-
PPC_PCFGR110 (0x0054)	P1_10	GPIO_PODR1:POD10	SOT16_0	-	SDA16	OCU2_OTD1_0	TRACE_CLK_0	PPG3_TOUT2_0	-
PPC_PCFGR111 (0x0056)	P1_11	GPIO_PODR1:POD11	SCS160_0	INDICATOR0_0	-	OCU8_OTD0_0	-	PPG4_TOUT0_0	-

Register (Offset)	Port	Resource Functional Outputs							
		POF=0	POF=1	POF=2	POF=3	POF=4	POF=5	POF=6	POF=7
PPC_PCFGR112 (0x0058)	P1_12	GPIO_PODR1:POD12	SCS161_0	-	-	OCU8_OTD1_0	TOT17_0	-	TX2_0
PPC_PCFGR113 (0x005A)	P1_13	GPIO_PODR1:POD13	-	-	-	OCU9_OTD0_0	-	-	-
PPC_PCFGR114 (0x005C)	P1_14	GPIO_PODR1:POD14	SYSC0_CLK_1	-	-	OCU9_OTD1_0	TOT48_0	PPG5_TOUT0_0	TX3_0
PPC_PCFGR115 (0x005E)	P1_15	GPIO_PODR1:POD15	SCK17_0	-	SCL17	OCU10_OTD0_0	SCK12_1	PPG5_TOUT2_0	INDICATOR0_1
PPC_PCFGR116 (0x0060)	P1_16	GPIO_PODR1:POD16	SOT17_0	-	SDA17	OCU10_OTD1_0	TOT49_0	SYSC0_CLK_0	WOT
PPC_PCFGR117 (0x0062)	P1_17	GPIO_PODR1:POD17	SCS170_0	-	-	-	-	PPG6_TOUT0_0	-
PPC_PCFGR118 (0x0064)	P1_18	GPIO_PODR1:POD18	SCS171_0	-	-	-	-	PPG6_TOUT2_0	TX5_0
PPC_PCFGR119 (0x0066)	P1_19	GPIO_PODR1:POD19	-	-	-	-	-	PPG7_TOUT0_0	-
PPC_PCFGR120 (0x0068)	P1_20	GPIO_PODR1:POD20	SCK8_0	-	SCL8	-	-	PPG7_TOUT2_0	-
PPC_PCFGR121 (0x006A)	P1_21	GPIO_PODR1:POD21	SOT8_0	-	SDA8	-	-	PPG8_TOUT0_0	-
PPC_PCFGR122 (0x006C)	P1_22	GPIO_PODR1:POD22	SCS80_0	-	-	-	-	PPG8_TOUT2_0	TX6_0
PPC_PCFGR123 (0x006E)	P1_23	GPIO_PODR1:POD23	-	-	-	-	-	PPG9_TOUT0_0	-
PPC_PCFGR124 (0x0070)	P1_24	GPIO_PODR1:POD24	SCK9_0	-	SCL9	-	-	PPG9_TOUT2_0	-
PPC_PCFGR125 (0x0072)	P1_25	GPIO_PODR1:POD25	SOT9_0	-	SDA9	-	-	PPG10_TOUT0_0	-
PPC_PCFGR126 (0x0074)	P1_26	GPIO_PODR1:POD26	SCS90_0	-	-	-	-	PPG10_TOUT2_0	-

Register (Offset)	Port	Resource Functional Outputs							
		POF=0	POF=1	POF=2	POF=3	POF=4	POF=5	POF=6	POF=7
PPC_PCFGR127 (0x0076)	P1_27	GPIO_PODR1:POD27	SCS91_0	-	-	-	-	PPG11_TOUT0_0	-
PPC_PCFGR128 (0x0078)	P1_28	GPIO_PODR1:POD28	-	-	-	-	-	PPG11_TOUT2_0	-
PPC_PCFGR129 (0x007A)	P1_29	GPIO_PODR1:POD29	SCK10_0	-	SCL10	-	-	-	-
PPC_PCFGR130 (0x007C)	P1_30	GPIO_PODR1:POD30	SOT10_0	-	SDA10	-	-	PPG12_TOUT0_0	-
PPC_PCFGR131 (0x007E)	P1_31	GPIO_PODR1:POD31	SCS100_0	-	-	-	-	PPG12_TOUT2_0	-
PPC_PCFGR200 (0x0080)	P2_00	GPIO_PODR2:POD00	-	-	-	-	-	PPG13_TOUT0_0	-
PPC_PCFGR201 (0x0082)	P2_01	GPIO_PODR2:POD01	SCK11_0	-	SCL11	-	-	PPG13_TOUT2_0	-
PPC_PCFGR202 (0x0084)	P2_02	GPIO_PODR2:POD02	SOT11_0	-	SDA11	-	-	PPG14_TOUT0_0	-
PPC_PCFGR203 (0x0086)	P2_03	GPIO_PODR2:POD03	SCS110_0	-	-	-	-	PPG14_TOUT2_0	-
PPC_PCFGR204 (0x0088)	P2_04	GPIO_PODR2:POD04	SCS111_0	-	-	-	-	PPG15_TOUT0_0	-
PPC_PCFGR205 (0x008A)	P2_05	GPIO_PODR2:POD05	-	-	-	-	-	PPG15_TOUT2_0	-
PPC_PCFGR206 (0x008C)	P2_06	GPIO_PODR2:POD06	SCK12_0	-	SCL12	-	-	-	-
PPC_PCFGR207 (0x008E)	P2_07	GPIO_PODR2:POD07	SOT12_0	-	SDA12	-	-	-	-
PPC_PCFGR208 (0x0090)	P2_08	GPIO_PODR2:POD08	SCS120_0	-	-	-	-	-	-
PPC_PCFGR209 (0x0092)	P2_09	GPIO_PODR2:POD09	SCS23_1	-	-	-	-	PPG14_TOUT0_1	MCSX0

Register (Offset)	Port	Resource Functional Outputs							
		POF=0	POF=1	POF=2	POF=3	POF=4	POF=5	POF=6	POF=7
PPC_PCFGR210 (0x0094)	P2_10	GPIO_PODR2:POD10	SCS31_1	-	-	-	-	-	MCSX1
PPC_PCFGR211 (0x0096)	P2_11	GPIO_PODR2:POD11	SCS32_1	-	-	-	-	-	MDATA0
PPC_PCFGR212 (0x0098)	P2_12	GPIO_PODR2:POD12	SCS33_1	-	-	-	-	-	MDATA1
PPC_PCFGR213 (0x009A)	P2_13	GPIO_PODR2:POD13	-	-	-	-	-	-	MDATA2
PPC_PCFGR214 (0x009C)	P2_14	GPIO_PODR2:POD14	SCK4_0	-	SCL4	-	-	-	MDATA3
PPC_PCFGR215 (0x009E)	P2_15	GPIO_PODR2:POD15	SOT4_0	-	SDA4	-	-	-	MDATA4
PPC_PCFGR216 (0x00A0)	P2_16	GPIO_PODR2:POD16	SCS40_0	-	-	-	-	-	MDATA5
PPC_PCFGR217 (0x00A2)	P2_17	GPIO_PODR2:POD17	SCS41_0	-	-	-	-	-	MDATA6
PPC_PCFGR218 (0x00A4)	P2_18	GPIO_PODR2:POD18	SCS42_0	-	-	-	-	-	MDATA7
PPC_PCFGR219 (0x00A6)	P2_19	GPIO_PODR2:POD19	SCS43_0	-	-	-	-	TX7_1	MAD0
PPC_PCFGR300 (0x00C0)	P3_00	GPIO_PODR3:POD00	-	TXD1_1	-	-	-	PPG4_TOUT0_1	MAD15
PPC_PCFGR301 (0x00C2)	P3_01	GPIO_PODR3:POD01	SCK1_1	TXD2_1	-	-	-	PPG4_TOUT2_1	MAD16
PPC_PCFGR302 (0x00C4)	P3_02	GPIO_PODR3:POD02	SOT1_1	TXD3_1	-	-	-	PPG5_TOUT0_1	MAD17
PPC_PCFGR303 (0x00C6)	P3_03	GPIO_PODR3:POD03	SCS10_1	TXER_1	-	-	-	PPG5_TOUT2_1	MAD18
PPC_PCFGR304 (0x00C8)	P3_04	GPIO_PODR3:POD04	SCS11_1	-	-	-	-	-	MAD19

Register (Offset)	Port	Resource Functional Outputs							
		POF=0	POF=1	POF=2	POF=3	POF=4	POF=5	POF=6	POF=7
PPC_PCFGR305 (0x00CA)	P3_05	GPIO_PODR3:POD05	SCS12_1	-	-	-	-	-	MAD20
PPC_PCFGR306 (0x00CC)	P3_06	GPIO_PODR3:POD06	SCS13_1	MDIO_1	-	-	-	SOT4_1	MAD21
PPC_PCFGR307 (0x00CE)	P3_07	GPIO_PODR3:POD07	-	-	-	-	-	SCS42_1	MDQM1
PPC_PCFGR308 (0x00D0)	P3_08	GPIO_PODR3:POD08	-	-	PPG6_TOUT0_1	OCU0_OTD0_1	-	-	-
PPC_PCFGR309 (0x00D2)	P3_09	GPIO_PODR3:POD09	SCK8_1	-	PPG6_TOUT2_1	OCU0_OTD1_1	TOT0_1	PPG22_TOUT0_0	-
PPC_PCFGR310 (0x00D4)	P3_10	GPIO_PODR3:POD10	SOT8_1	-	PPG7_TOUT0_1	OCU1_OTD0_1	TRACE0_1	PPG22_TOUT2_0	TX0_1
PPC_PCFGR311 (0x00D6)	P3_11	GPIO_PODR3:POD11	SCS80_1	-	PPG7_TOUT2_1	OCU1_OTD1_1	TOT1_1	TRACE1_1	-
PPC_PCFGR312 (0x00D8)	P3_12	GPIO_PODR3:POD12	-	-	PPG8_TOUT0_1	OCU2_OTD0_1	-	TRACE2_1	TX1_1
PPC_PCFGR313 (0x00DA)	P3_13	GPIO_PODR3:POD13	SCK10_1	-	PPG8_TOUT2_1	OCU2_OTD1_1	TOT16_1	TRACE3_1	-
PPC_PCFGR314 (0x00DC)	P3_14	GPIO_PODR3:POD14	SOT10_1	-	PPG9_TOUT0_1	OCU8_OTD0_1	-	TRACE_CTL_1	-
PPC_PCFGR315 (0x00DE)	P3_15	GPIO_PODR3:POD15	SCS100_1	-	PPG9_TOUT2_1	OCU8_OTD1_1	TOT17_1	TRACE_CLK_1	TX2_1
PPC_PCFGR316 (0x00E0)	P3_16	GPIO_PODR3:POD16	-	-	PPG10_TOUT0_1	OCU9_OTD0_1	-	-	-
PPC_PCFGR317 (0x00E2)	P3_17	GPIO_PODR3:POD17	-	-	PPG10_TOUT2_1	OCU9_OTD1_1	TOT48_1	-	TX3_1
PPC_PCFGR318 (0x00E4)	P3_18	GPIO_PODR3:POD18	-	-	PPG11_TOUT0_1	OCU10_OTD0_1	-	-	-
PPC_PCFGR319 (0x00E6)	P3_19	GPIO_PODR3:POD19	SCK9_1	-	PPG11_TOUT2_1	OCU10_OTD1_1	-	-	-

Register (Offset)	Port	Resource Functional Outputs							
		POF=0	POF=1	POF=2	POF=3	POF=4	POF=5	POF=6	POF=7
PPC_PCFGR320 (0x00E8)	P3_20	GPIO_PODR3:POD20	SOT9_1	-	-	-	-	-	TX5_1
PPC_PCFGR321 (0x00EA)	P3_21	GPIO_PODR3:POD21	SCS90_1	-	-	-	TOT49_1	-	-
PPC_PCFGR322 (0x00EC)	P3_22	GPIO_PODR3:POD22	SCS91_1	-	-	-	-	-	-
PPC_PCFGR323 (0x00EE)	P3_23	GPIO_PODR3:POD23	-	-	-	-	SCS120_1	-	TX6_1
PPC_PCFGR324 (0x00F0)	P3_24	GPIO_PODR3:POD24	SOT2_1	-	-	-	-	PPG12_TOUT0_1	MDATA8
PPC_PCFGR325 (0x00F2)	P3_25	GPIO_PODR3:POD25	SCS20_1	-	-	-	-	PPG12_TOUT2_1	MDATA9
PPC_PCFGR326 (0x00F4)	P3_26	GPIO_PODR3:POD26	SCS21_1	-	-	-	-	PPG13_TOUT0_1	MDATA10
PPC_PCFGR327 (0x00F6)	P3_27	GPIO_PODR3:POD27	SCS22_1	-	-	-	-	PPG13_TOUT2_1	MDATA11
PPC_PCFGR328 (0x00F8)	P3_28	GPIO_PODR3:POD28	-	-	-	-	-	PPG14_TOUT2_1	MDATA12
PPC_PCFGR329 (0x00FA)	P3_29	GPIO_PODR3:POD29	SCK3_1	-	-	-	-	PPG15_TOUT0_1	MDATA13
PPC_PCFGR330 (0x00FC)	P3_30	GPIO_PODR3:POD30	SOT3_1	-	-	-	-	PPG15_TOUT2_1	MDATA14
PPC_PCFGR331 (0x00FE)	P3_31	GPIO_PODR3:POD31	SCS30_1	-	-	-	-	-	MDATA15
PPC_PCFGR400 (0x0100)	P4_00	GPIO_PODR4:POD00	-	-	-	-	-	PPG16_TOUT0_0	-
PPC_PCFGR401 (0x0102)	P4_01	GPIO_PODR4:POD01	-	-	-	-	TX0_2	PPG16_TOUT2_0	-
PPC_PCFGR402 (0x0104)	P4_02	GPIO_PODR4:POD02	-	-	-	-	-	PPG17_TOUT0_0	-

Register (Offset)	Port	Resource Functional Outputs							
		POF=0	POF=1	POF=2	POF=3	POF=4	POF=5	POF=6	POF=7
PPC_PCFGR403 (0x0106)	P4_03	GPIO_PODR4:POD03	-	-	SCS170_1	-	-	PPG17_TOUT2_0	-
PPC_PCFGR404 (0x0108)	P4_04	GPIO_PODR4:POD04	-	TXEN_1	SCK17_1	-	TX3_2	PPG18_TOUT0_0	-
PPC_PCFGR405 (0x010A)	P4_05	GPIO_PODR4:POD05	-	TXD0_1	SOT17_1	-	-	PPG18_TOUT2_0	-
PPC_PCFGR406 (0x010C)	P4_06	GPIO_PODR4:POD06	-	-	-	-	-	PPG19_TOUT0_0	-
PPC_PCFGR407 (0x010E)	P4_07	GPIO_PODR4:POD07	-	-	-	-	-	PPG19_TOUT2_0	-
PPC_PCFGR408 (0x0110)	P4_08	GPIO_PODR4:POD08	-	-	-	-	-	PPG20_TOUT0_0	-
PPC_PCFGR409 (0x0112)	P4_09	GPIO_PODR4:POD09	-	-	-	-	-	PPG20_TOUT2_0	-
PPC_PCFGR410 (0x0114)	P4_10	GPIO_PODR4:POD10	-	-	-	-	-	PPG21_TOUT0_0	-
PPC_PCFGR411 (0x0116)	P4_11	GPIO_PODR4:POD11	-	-	-	-	-	PPG21_TOUT2_0	-
PPC_PCFGR412 (0x0118)	P4_12	GPIO_PODR4:POD12	-	-	-	-	-	PPG23_TOUT0_0	-
PPC_PCFGR413 (0x011A)	P4_13	GPIO_PODR4:POD13	-	-	-	-	-	PPG23_TOUT2_0	-
PPC_PCFGR414 (0x011C)	P4_14	GPIO_PODR4:POD14	-	-	-	-	-	PPG24_TOUT0_0	-
PPC_PCFGR415 (0x011E)	P4_15	GPIO_PODR4:POD15	-	-	-	-	-	PPG24_TOUT2_0	-
PPC_PCFGR416 (0x0120)	P4_16	GPIO_PODR4:POD16	-	-	-	-	-	PPG25_TOUT0_0	-
PPC_PCFGR417 (0x0122)	P4_17	GPIO_PODR4:POD17	-	-	-	-	SOT12_1	PPG25_TOUT2_0	-

Register (Offset)	Port	Resource Functional Outputs							
		POF=0	POF=1	POF=2	POF=3	POF=4	POF=5	POF=6	POF=7
PPC_PCFGR418 (0x0124)	P4_18	GPIO_PODR4:POD18	-	-	-	-	-	PPG26_TOUT0_0	-
PPC_PCFGR419 (0x0126)	P4_19	GPIO_PODR4:POD19	-	-	-	-	-	PPG26_TOUT2_0	-
PPC_PCFGR420 (0x0128)	P4_20	GPIO_PODR4:POD20	-	-	-	-	SOT16_1	PPG27_TOUT0_0	TX4_0
PPC_PCFGR421 (0x012A)	P4_21	GPIO_PODR4:POD21	-	-	-	-	SCK16_1	PPG27_TOUT2_0	-
PPC_PCFGR422 (0x012C)	P4_22	GPIO_PODR4:POD22	-	-	-	-	SCS161_1	-	-
PPC_PCFGR423 (0x012E)	P4_23	GPIO_PODR4:POD23	-	-	-	-	SCS160_1	PPG28_TOUT0_0	TX7_0
PPC_PCFGR424 (0x0130)	P4_24	GPIO_PODR4:POD24	-	-	-	-	-	PPG28_TOUT2_0	-
PPC_PCFGR425 (0x0132)	P4_25	GPIO_PODR4:POD25	-	-	-	-	-	PPG29_TOUT0_0	-
PPC_PCFGR426 (0x0134)	P4_26	GPIO_PODR4:POD26	-	-	-	-	-	PPG29_TOUT2_0	-
PPC_PCFGR427 (0x0136)	P4_27	GPIO_PODR4:POD27	-	-	-	-	-	PPG30_TOUT0_0	-
PPC_PCFGR428 (0x0138)	P4_28	GPIO_PODR4:POD28	-	-	-	-	-	PPG30_TOUT2_0	-
PPC_PCFGR429 (0x013A)	P4_29	GPIO_PODR4:POD29	-	-	-	-	-	PPG31_TOUT0_0	-
PPC_PCFGR430 (0x013C)	P4_30	GPIO_PODR4:POD30	-	-	-	-	-	PPG31_TOUT2_0	-
PPC_PCFGR431 (0x013E)	P4_31	GPIO_PODR4:POD31	SCK2_1	-	-	-	-	-	-

Notes:

- *The hyphen indicates that setting is prohibited. If setting the port will be operated as input independent on the register value of the GPIO_DDR.*
- *The register for P0_20 for POF exists though the port only supports input not supports output. The configuration of POF=0 for the port does not affect anything.*

8. Precautions and Handling Devices

8.1 Handling Precautions

Any semiconductor devices have inherently a certain rate of failure. The possibility of failure is greatly affected by the conditions in which they are used (circuit conditions, environmental conditions, etc.). This page describes precautions that must be observed to minimize the chance of failure and to obtain higher reliability from your Cypress semiconductor devices.

8.1.1 Precautions for Product Design

This section describes precautions when designing electronic equipment using semiconductor devices.

Absolute Maximum Ratings

Semiconductor devices can be permanently damaged by application of stress (voltage, current, temperature, and so on.) in excess of certain established limits, called absolute maximum ratings. Do not exceed these ratings.

Recommended Operating Conditions

Recommended operating conditions are normal operating ranges for the semiconductor device. All the device's electrical characteristics are warranted when operated within these ranges.

Always use semiconductor devices within the recommended operating conditions. Operation outside these ranges may adversely affect reliability and could result in device failure.

No warranty is made with respect to uses, operating conditions, or combinations not represented on the data sheet. Users considering application outside the listed conditions are advised to contact their sales representative beforehand.

Processing and Protection of Pins

These precautions must be followed when handling the pins which connect semiconductor devices to power supply and input/output functions.

(1) Preventing Over-Voltage and Over-Current Conditions

Exposure to voltage or current levels in excess of maximum ratings at any pin is likely to cause deterioration within the device and in extreme cases leads to permanent damage of the device. Try to prevent such overvoltage or over-current conditions at the design stage.

(2) Protection of Output Pins

Shorting of output pins to supply pins or other output pins, or connection to large capacitance can cause large current flows. Such conditions if present for extended periods of time can damage the device.

Therefore, avoid this type of connection.

(3) Handling of Unused Input Pins

Unconnected input pins with very high impedance levels can adversely affect stability of operation. Such pins should be connected through an appropriate resistance to a power supply pin or ground pin.

8.1.2 Precautions for Package Mounting

Package mounting may be either lead insertion type or surface mount type. In either case, for heat resistance during soldering, you should only mount under Cypress's recommended conditions. For detailed information about mount conditions, contact your sales representative.

Lead Insertion Type

Mounting of lead insertion type packages onto printed circuit boards may be done by two methods: direct soldering on the board, or mounting by using a socket.

Direct mounting onto boards normally involves processes for inserting leads into through-holes on the board and using the flow soldering (wave soldering) method of applying liquid solder. In this case, the soldering process usually causes leads to be subjected to thermal stress in excess of the absolute ratings for storage temperature. Mounting processes should conform to Cypress recommended mounting conditions.

If socket mounting is used, differences in surface treatment of the socket contacts and IC lead surfaces can lead to contact deterioration after long periods. For this reason it is recommended that the surface treatment of socket contacts and IC leads be verified before mounting.

Surface Mount Type

Surface mount packaging has longer and thinner leads than lead-insertion packaging, and therefore leads are more easily deformed or bent. The use of packages with higher pin counts and narrower pin pitch results in increased susceptibility to open connections caused by deformed pins, or shorting due to solder bridges.

You must use appropriate mounting techniques. Cypress recommends the solder reflow method, and has established a ranking of mounting conditions for each product. Users are advised to mount packages in accordance with Cypress ranking of recommended conditions.

Lead-Free Packaging

CAUTION: When ball grid array (BGA) packages with Sn-Ag-Cu balls are mounted using Sn-Pb eutectic soldering, junction strength may be reduced under some conditions of use.

Storage of Semiconductor Devices

Because plastic chip packages are formed from plastic resins, exposure to natural environmental conditions will cause absorption of moisture. During mounting, the application of heat to a package that has absorbed moisture can cause surfaces to peel, reducing moisture resistance and causing packages to crack. To prevent, do the following:

(1) Avoid exposure to rapid temperature changes, which cause moisture to condense inside the product. Store products in locations where temperature changes are slight.

(2) Use dry boxes for product storage. Products should be stored below 70% relative humidity, and at temperatures between 5 ˚C and 30 ˚C. When you open Dry Package that recommends humidity 40% to 70% relative humidity.

(3) When necessary, Cypress packages semiconductor devices in highly moisture-resistant aluminum laminate bags, with a silica gel desiccant. Devices should be sealed in their aluminum laminate bags for storage.

(4) Avoid storing packages where they are exposed to corrosive gases or high levels of dust.

Baking

Packages that have absorbed moisture may be de-moisturized by baking (heat drying). Follow the Cypress recommended conditions for baking.

Condition: 125 ˚C/24 h

Static Electricity

Because semiconductor devices are particularly susceptible to damage by static electricity, you must take the following precautions:

(1) Maintain relative humidity in the working environment between 40% and 70%.
Use of an apparatus for ion generation may be needed to remove electricity.

(2) Electrically ground all conveyors, solder vessels, soldering irons and peripheral equipment.

(3) Eliminate static body electricity by the use of rings or bracelets connected to ground through high resistance (on the level of 1 MΩ).
Wearing of conductive clothing and shoes, use of conductive floor mats and other measures to minimize shock loads is recommended.

(4) Ground all fixtures and instruments, or protect with anti-static measures.

(5) Avoid the use of styrofoam or other highly static-prone materials for storage of completed board assemblies.

8.1.3 Precautions for Use Environment

Reliability of semiconductor devices depends on ambient temperature and other conditions as described above.

For reliable performance, do the following:

(1) Humidity

Prolonged use in high humidity can lead to leakage in devices as well as printed circuit boards. If high humidity levels are anticipated, consider anti-humidity processing.

(2) Discharge of Static Electricity

When high-voltage charges exist close to semiconductor devices, discharges can cause abnormal operation. In such cases, use anti-static measures or processing to prevent discharges.

(3) Corrosive Gases, Dust, or Oil

Exposure to corrosive gases or contact with dust or oil may lead to chemical reactions that will adversely affect the device. If you use devices in such conditions, consider ways to prevent such exposure or to protect the devices.

(4) Radiation, Including Cosmic Radiation

Most devices are not designed for environments involving exposure to radiation or cosmic radiation. Users should provide shielding as appropriate.

(5) Smoke, Flame

CAUTION: Plastic molded devices are flammable, and therefore should not be used near combustible substances. If devices begin to smoke or burn, there is danger of the release of toxic gases.

Customers considering the use of Cypress products in other special environmental conditions should consult with sales representatives.

8.2 Handling Devices

For Latch-Up Prevention

The latch-up phenomenon may occur on a CMOS IC in the following cases: the voltage applied to an input or output pin is higher than VCC or lower than VSS; or the voltage applied between a VCC pin and a VSS pin exceeds the rating. A latch-up causes a rapid increase in the power supply current, possibly resulting in thermal damage to an element. When using the device, take sufficient care not to exceed the maximum rating.

Also be careful that analog power supplies (AVCC5,AVRH5) and analog inputs do not exceed the digital power supply (VCC) at the analog system power-on and power-off times.
The power-on sequence is as follows. Simultaneously turn on the digital supply voltage (VCC) and analog supply voltages (AVCC5,AVRH5), or turn on the digital supply voltage (VCC) and then the analog supply voltages (AVCC5,AVRH5).

About Handling Unused Pins

Leaving unused input pins open may cause permanent damage from a malfunction or latch-up. Take measures for unused pins, such as pulling up or pulling down the voltage with resistors of 2 kilo ohms or higher.

If there are any unused input/output pins, set them to the output state and then open them, or set them to the input state and handle them in the same way as input pins.

About Power Supply Pins

If the device has multiple VCC and VSS pins, the device is designed in such a way that the pins that should be at the same potential are connected to each other inside the device to prevent malfunctions such as latch-up. However, to reduce unwanted emissions, prevent malfunctions of strobe signals caused by an increase of the ground level, and observe standards on total output current, be sure to connect all the VCC and VSS pins to the power source and ground externally. Also handle all the VSS power supply pins in this way as shown in the following diagram. If there are multiple VCC or VSS systems, the device does not operate normally even within the guaranteed operating range.

Figure 8-1 Pin Assignment

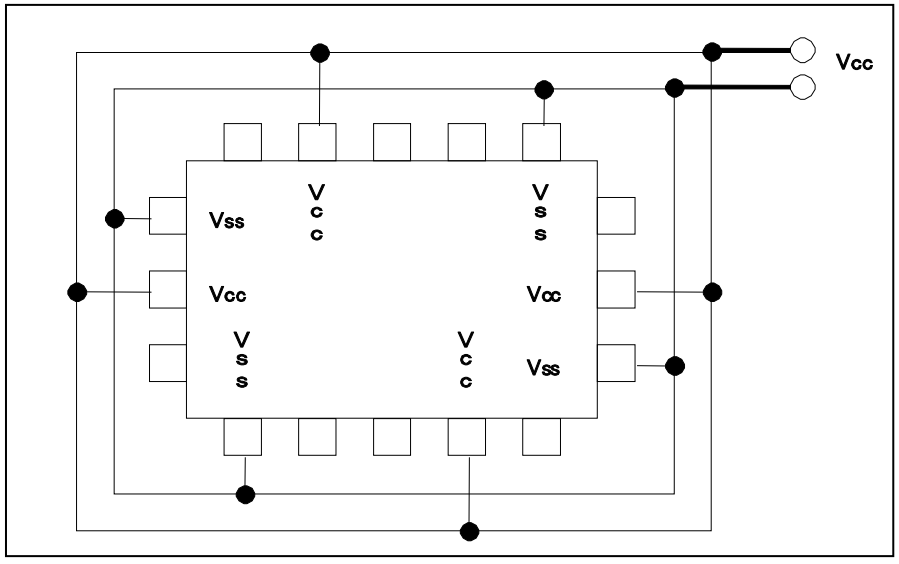

In addition, consider connecting with low impedance from the power supply source to the VCC and VSS of this device.

We recommend connecting a ceramic capacitor as a bypass capacitor between VCC and VSS, near this device.

About the Crystal Oscillation Circuit

Noise entering the X0 or X1 pin may cause a malfunction. Design the printed circuit board in such a way that the X0 and X1 pins, the crystal oscillator (or ceramic resonator), and a bypass capacitor to ground are located very close to the device.

We recommend that the printed circuit board artwork have the X0 and X1 pins enclosed by ground.

About the Mode Pin (MODE)

Use mode pin MODE by directly connecting it to a VCC or VSS pin. To prevent noise from causing the device to accidentally enter test mode, reduce the pattern length between each mode pin and a VCC or VSS pin on the printed circuit board, and connect them with low impedance.

About the Power-on Time

To prevent the internal built-in voltage step-down circuit from malfunctioning, secure a voltage rising time of 50 µs (between 0.2 V and 2.7 V) or longer at the power-on time.

Point to Note during PLL Clock Operation

While a PLL clock is selected, if the oscillator breaks off or input stops, the PLL clock may continue operating with the free running frequency of the internal self-oscillator circuit. This operation is outside of the guaranteed range.

Power Supply Pin Processing of an A/D Converter

Even when no A/D converter is used, establish a connection such that AVCC5=AVRH5=VCC5 and AVSS/AVRL5=VSS.

Points to Note About Using External Clocks

External clocks are not supported.

External direct clock input cannot be used.

Power-on Sequence of the Power Supply Analog Inputs of an A/D Converter

Be sure to turn on the digital power supply (VCC) before the application of the power supplies (AVCC, AVRH, and AVRL) and analog inputs (AN0 to AN63) of an A/D converter.
At the power-off time, turn off the power supplies and analog inputs of the A/D converter, and then turn off the digital power supply (VCC). Perform these power-on and power-off operations without AVRH exceeding AVCC. Even when using a pin shared with an analog input as an input port, do not allow the input voltage to exceed AVCC. (Turning on or off the analog supply voltage and digital supply voltage simultaneously is not a problem.)

Method to Switch Off VCC12 during Power-Off Sequence

During power-off sequence, it is necessary to switch off VCC12 by driving PSC1 pin low by entering PSS mode (power domain 2 off). If VCC12 needs to be switched off by other means, RSTX needs to be asserted before switching off VCC12 to inactivate the operation of VCC12 supplied domain below the operation assurance range.

About C Pin Processing

This device has a built-in voltage step-down circuit. Be sure to connect a capacitor to the C pin for internal stabilization of the device. For the standard values, see "Recommended operating conditions" in the latest data sheet.

Precautions on Designing a Mounting Substrate

Measures against heat generation from the package must be taken for the mounting substrate to observe the absolute maximum rating (operating temperature). Design a mounting substrate with 4 or more layers. Connect the back of the package stage and the substrate pad with solder paste. Arrange thermal via holes on the substrate pad.

Notes on Writing to a Register Containing a Status Flag

In writing to a register containing a status flag (particularly an interrupt request flag, etc.) to control a function, it is important to take care not to accidentally clear the status flag.
Therefore, before the write operation, configure the status bit such that the flag is not cleared, and then set the control bit to the desired value.
Especially for control bits configured as a set of multiple bits, bit instructions cannot be used (bit instructions have only 1-bit access). In such cases, byte, half-word, or word access is used to write to the control bits and a status flag simultaneously. However, at this time, be careful not to accidentally clear bits other than the intended ones (the status flag bit in this case).

Note: Bit instructions take this point into account for registers that support bit-band units, so it does not need to be a concern. You need to take care when using bit instructions for registers that do not support bit-band units.

9. Electric Characteristics

9.1 Electrical Characteristics

This chapter contains target values and information.
Target values and information are subjects to change without notice.

9.1.1 Absolute Maximum Rating

Parameter	Symbol	Rating		Unit	Remarks
		Min	Max		
Power supply voltage*1, *2	$V_{CC}5$	V_{SS}-0.3	V_{SS}+6.0	V	
	$V_{CC}53$	V_{SS}-0.3	V_{SS}+6.0	V	$V_{CC}53 \leq V_{CC}5$
	$V_{CC}3$	V_{SS}-0.3	V_{SS}+4.0	V	$V_{CC}3 \leq V_{CC}5$
	DV_{CC}	V_{SS}-0.3	V_{SS}+6.0	V	
	$V_{CC}12$	V_{SS}-0.3	V_{SS}+1.8	V	$V_{CC}12 \leq AV_{CC}5$
Analog supply voltage*1, *2	$AV_{CC}5$	V_{SS}-0.3	V_{SS}+6.0	V	$AV_{CC}5 \leq V_{CC}5$
Analog reference voltage*1	AVRH	V_{SS}-0.3	V_{SS}+6.0	V	$AVRH \leq AV_{CC}5$
Input voltage*1	V_{I1}	V_{SS}-0.3	$V_{CC}5$+0.3	V	5 V pins
	V_{I2}	V_{SS}-0.3	DV_{CC}+0.3	V	5 V/3 V DV_{CC} pins
	V_{I3}	V_{SS}-0.3	$V_{CC}3$+0.3	V	3 V pins
	V_{IE}	V_{SS}-0.3	$V_{CC}53$+0.3	V	5 V/3 V pins
Analog pin input voltage*1	V_{IA}	V_{SS}-0.3	$V_{CC}5$+0.3	V	
Output voltage*1	V_{O1}	V_{SS}-0.3	$V_{CC}5$+0.3	V	5 V pins
	V_{O2}	V_{SS}-0.3	DV_{CC}+0.3	V	5 V/3 V DV_{CC} pins
	V_{O3}	V_{SS}-0.3	$V_{CC}3$+0.3	V	3 V pins
	V_{O4}	V_{SS}-0.3	$V_{CC}53$+0.3	V	5 V/3 V pins
Maximum clamp current	$\|I_{CLAMP}\|$	-	4	mA	*13, *A
Total maximum clamp current	$\Sigma\|I_{CLAMP}\|$	-	20	mA	*13, *A
Total maximum clamp current	$\Sigma\|I_{CLAMP}\|$	-	90	mA	*B
Total maximum clamp current	$\Sigma\|I_{CLAMP}\|$	-	65	mA	*C
"L"-level maximum output current*3	I_{OL1}	-	3.5	mA	When setting is 1 mA*6, *7, *8
	I_{OL2}	-	7	mA	When setting is 2 mA*6, *7, *8, *9
	I_{OL3}	-	10	mA	When setting is 5 mA*9
	I_{OL4}	-	16	mA	When setting is 10 mA*9
	I_{OL6}	-	40	mA	When setting is 30 mA*7
	I_{OL7}	-	8	mA	When setting is 3 mA *10
	I_{OL8}	-	11	mA	When setting is 6 mA *11
	I_{OL9}	-	21	mA	When setting is 15 mA *12
"L"-level average output current*4	I_{OLAV1}	-	1	mA	When setting is 1 mA*6, *7, *8
	I_{OLAV2}	-	2	mA	When setting is 2 mA*6, *7, *8, *9
	I_{OLAV3}	-	5	mA	When setting is 5 mA*9
	I_{OLAV4}	-	10	mA	When setting is 10 mA*9
	I_{OLAV6}	-	30	mA	When setting is 30 mA*7
	I_{OLAV7}	-	3	mA	When setting is 3 mA *10
	I_{OLAV8}	-	6	mA	When setting is 6 mA *11
	I_{OLAV9}	-	15	mA	When setting is 15 mA *12
"L"-level total output current*5	ΣI_{OL1}	-	50	mA	*6, *10
	ΣI_{OL2}	-	250	mA	*7

Parameter	Symbol	Rating		Unit	Remarks
		Min	Max		
"L"-level total output current*5	ΣI_{OL3}	-	50	mA	*8
	ΣI_{OL4}	-	50	mA	*9, *11
"H"-level maximum output current*3	I_{OH1}	-	-3.5	mA	When setting is 1 mA*6, *7, *8
	I_{OH2}	-	-7	mA	When setting is 2 mA*6, *7, *8, *9
	I_{OH3}	-	-10	mA	When setting is 5 mA*9
	I_{OH4}	-	-16	mA	When setting is 10 mA*9
	I_{OH6}	-	-40	mA	When setting is 30 mA*7
	I_{OH8}	-	-11	mA	When setting is 6 mA *11
	I_{OH9}	-	-21	mA	When setting is 15 mA *12
"H"-level average output current*4	I_{OHAV1}	-	-1	mA	When setting is 1 mA*6, *7, *8
	I_{OHAV2}	-	-2	mA	When setting is 2 mA*6, *7, *8, *9
	I_{OHAV3}	-	-5	mA	When setting is 5 mA*9
	I_{OHAV4}	-	-10	mA	When setting is 10 mA*9
	I_{OHAV6}	-	-30	mA	When setting is 30 mA*7
	I_{OHAV8}	-	-6	mA	When setting is 6 mA *11
	I_{OHAV9}	-	-15	mA	When setting is 15 mA *12
"H"-level total output current*5	ΣI_{OH1}	-	-50	mA	*6, *10
	ΣI_{OH2}	-	-250	mA	*7
	ΣI_{OH3}	-	-50	mA	*8
	ΣI_{OH4}	-	-50	mA	*9 *11
Power consumption	P_D	-	2000	mW	-40°C ≤ T_A ≤ 105°C
			1100	mW	-40°C ≤ T_A ≤ 125°C
Operating temperature	T_A	-40	+105	°C	P_D ≤ 2000 mW
		-40	+125	°C	P_D ≤ 1100 mW
System Thermal Resistance	Theta j-a1	-	17	°C/W	TEQFP 208 — The minimum value depends on the system specification of heat radiation. The described value is estimated under the condition which is specified at "9.1.2 Recommended operating condition".
	Theta j-a2	-	19	°C/W	TEQFP 176
	Theta j-a3	-	20	°C/W	TEQFP 144 (0.5 mm Pitch)
	Theta j-a4	-	22	°C/W	TEQFP 144 (0.4 mm Pitch)
Package Thermal Resistance	Psi j-t1	-	0.6	°C/W	TEQFP208
	Psi j-t2	-	1.0	°C/W	TEQFP176
	Psi j-t3	-	2.0	°C/W	TEQFP144 (0.5 mm Pitch)
	Psi j-t4	-	2.0	°C/W	TEQFP144 (0.4 mm Pitch)
Storage temperature	Tstg	-55	+150	°C	

*1 These parameters are based on the condition that V_{SS} = AV_{SS} = DV_{SS} = 0.0 V.

*2 Take care that DV_{CC}, $AV_{CC}5$ do not exceed $V_{CC}5$ at, for example, the power-on time.
For S6J33xxxAx or S6J33xxxCx or S6J33xxxEx or S6J33xxxGx option,
take care that AVCC5 do not exceed VCC5 at, for example, the power-on time.

*3 The maximum output current is defined as the value of the peak current flowing through any one of the corresponding pins.

*4 The average output current is defined as the value of the average current flowing through any one of the corresponding pins for a 10 ms period. The average value is the operation current × the operation ratio.

*5 The total output current is defined as the maximum current value flowing through all of corresponding pins.

*6 Output of 5 V pins.

*7 Output of DV_{CC} pins.

*8 Output of 5 V/3 V pins.

*9 Output of 3 V pins.

*10 Output of I^2C.

*11 Output of P1_00 to P1_02 pins

*12 Output of P2_12 pins

*13 VI or VO should never exceed the specified ratings. However, if the maximum current to/from an input is limited by a suitable external resistor, the ICLAMP rating supersedes the VI rating.

*A Relevant pins: All general-purpose ports and analog input pins

- Corresponding pins: all general-purpose ports
- Use within recommended operating conditions.
- Use at DC voltage (current).
- The +B signal should always be applied by connecting a limiting resistor between the +B signal and the microcontroller.
- The value of the limiting resistor should be set so that the current input to the microcontroller pin does not exceed rated values at any time regardless of instantaneously or constantly when the +B signal is input.
- Note that when the microcontroller drive current is low, such as in the low power consumption modes, the + B input potential can increase the potential at the VCC pin via a protective diode, possibly affecting other devices.
- Note that if the + B signal is input when the microcontroller is off (not fixed at 0 V), since the power is supplied through the pin, the microcontroller may operate incompletely.
- Note that if the +B signal is input at power-on, since the power is supplied through the pin, the power-on reset may not function in the power supply voltage.
- Do not leave + B input pins open.

Example of a recommended circuit

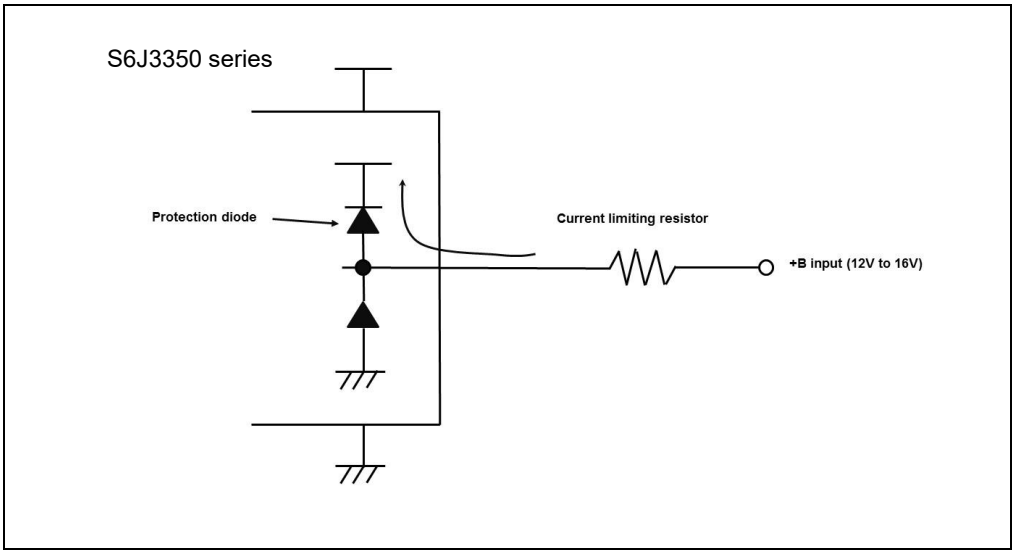

WARNING:

− *Semiconductor devices may be permanently damaged by application of stress (including, without limitation, voltage, current or temperature) in excess of absolute maximum ratings. Do not exceed any of these ratings.*

*B Relevant pins: All general-purpose ports and analog input pins

- Corresponding pins: all general-purpose ports
- Use within recommended operating conditions.

- Use at DC voltage (current).
  MCU is operational, IO is driving LOW level (i.e. NMOS transistor active), there are negative biased pulses (-B signal) applied to active IO according to following specification (must not be exceeded).

  Pulse condition specification:

  U_pulse = max -40 V
  T_pulse = max 1 ms
  #_pulse = max 5000

  Current and Power Dissipation

  U_peak = -40 V
  R_serial = 22 k
  => I_pin = 1.8 mA

  U_out = -0.1 V (current drawn mainly over NMOS transistor)

  => I_total = 50 pins x 1.8 mA = 90 mA
  => P_total = 50 pins x (1.8 mA x 0.1V) = 9 mW

  I_total and P_total are within allowed limits of extended specification.

- The - B signal should always be applied by connecting a limiting resistor between the - B signal and the microcontroller.
- The value of the limiting resistor should be set so that the current input to the microcontroller pin does not exceed rated values at any time regardless of instantaneously or constantly when the - B signal is input.
- Do not leave - B input pins open.

Example of a recommended circuit

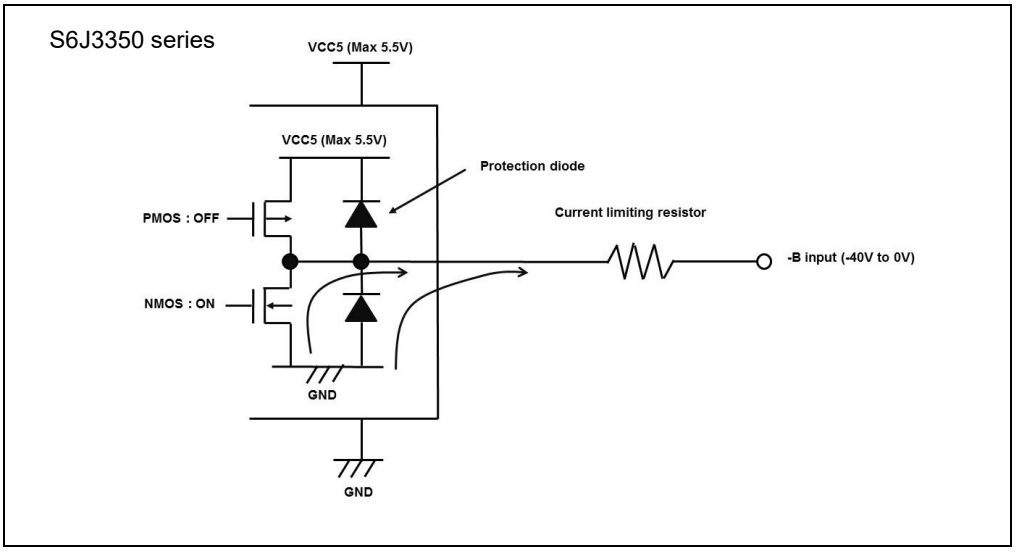

WARNING:

– *Semiconductor devices may be permanently damaged by application of stress (including, without limitation, voltage, current or temperature) in excess of absolute maximum ratings. Do not exceed any of these ratings.*

*C Relevant pins: All general-purpose ports and analog input pins

- Corresponding pins: all general-purpose ports
- Use within non operation conditions. The device is not supplied (VCC5: off, VCC12: off, VCC53: off).

- Use at DC voltage (current).
  MCU is non-operational, PCB is in reverse polarity condition (supply of the MCU is off), negative biased voltage level (-B signal) is applied to inactive IO according to following specification (must not be exceeded).
  Reverse polarity condition specification:

  U_reverse = max -28 V
  T_reverse = max 4 h

  Current and Power Dissipation

  U_reverse = -28 V
  R_serial = 22 k
  => I_pin = 1.3 mA

  U_out = -0.7 V (current drawn mainly over clamping diodes)

  => I_total = 50 pins x 1.3 mA = 65 mA
  => P_total = 50 pins x (1.3 mA x 0.7 V) = 46 mW

  I_total and P_total are within allowed limits of extended specification.

- The - B signal should always be applied by connecting a limiting resistor between the - B signal and the microcontroller.
- The value of the limiting resistor should be set so that the current input to the microcontroller pin does not exceed rated values at any time regardless of instantaneously or constantly when the - B signal is input.
- Do not leave - B input pins open.

Example of a recommended circuit

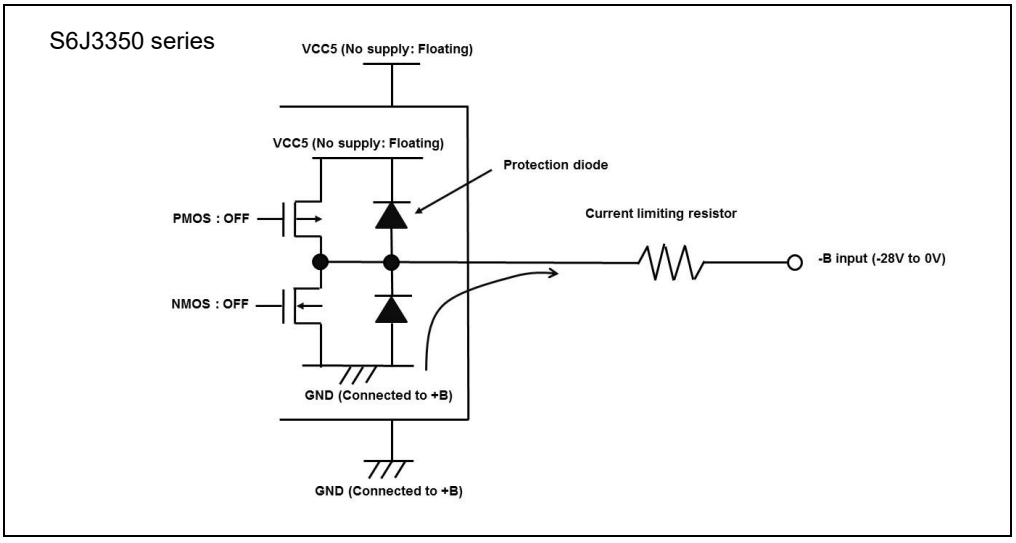

WARNING:

– *Semiconductor devices may be permanently damaged by application of stress (including, without limitation, voltage, current or temperature) in excess of absolute maximum ratings. Do not exceed any of these ratings.*

9.1.2 Recommended Operating Condition

Parameter	Symbol	Pin Name	Rating		Unit	Remarks
			Min	Max		
Supply voltage Recommended operation assurance range*4	$V_{CC}5$	VCC5	4.5	5.5	V	*1
			3	3.6		*2 *3
	$V_{CC}53$	VCC53	4.5	5.5	V	*1
			3	3.6	V	
	DV_{CC}	DVCC	4.5	5.5	V	*1 *3
			3.0	3.6		*2
	$AV_{CC}5$	AVCC5	4.5	5.5	V	*1
			3	3.6		*2 *3
	$V_{CC}3$	VCC3	3	3.6	V	
	$V_{CC}12$	VCC12	1.09	1.21	V	
Supply voltage Operation assurance range	$V_{CC}5$	VCC5	3.5	5.5	V	*1
			2.7	3.6		*2 *3
	$V_{CC}53$	VCC53	2.7	5.5	V	*1
			2.7	3.6		
	DV_{CC}	DVCC	3.5	5.5	V	*1 *3
			2.7	3.6		*2
	$AV_{CC}5$	AVCC5	3.5	5.5	V	*1
			2.7	3.6		*2 *3
	$V_{CC}3$	VCC3	2.7	3.6	V	
	$V_{CC}12$	VCC12	1.09	1.21	V	*5
Smoothing capacitor*	C_S	C	4.7		µF	Tolerance of up to ± 40 %
Operating temperature	T_A	-	-40	105	°C	$P_D \leq 2000$ mW
	T_A	-	-40	125	°C	$P_D \leq 1100$ mW

*1: For S6J335xxSx or S6J335xxUx or S6J335xxTx or S6J335xxVx option.

*2: For S6J335xxBx or S6J335xxDx or S6J335xxFx or S6J335xxHx option.

*3: For S6J335xxAx or S6J335xxCx or S6J335xxEx or S6J335xxGx option.

*4: Corresponding functions for Low voltage monitoring of supply voltage are described in CHAPTER 13 Low Voltage Detection of S6J3300 Series Hardware Manual.
The detection/release threshold values of following LVD channels are potentially below supply range defined in 9.1.2 Recommended Operating Condition (refer to "9.1.4.11 Low Voltage Detection (External Voltage)" and "9.1.4.12 Low Voltage Detection (Internal Voltage)" for detection/release threshold values for these LVD channels):

LVDL0

LVDL1

LVDL2

LVDH0

LVDH1

LVDH2

When it is used outside recommended range (this is the range of guaranteed operation), contact your sales representative. The initial detection voltage of the external low voltage detection is 2.6 V ± 3.5 % (LVDH1/LVDH2) or 0.8125 ± 3.5 % (LVDL2). This LVD setting and internal LVD (LVDL0/LVDL1) cannot be used to reliably generate a reset before voltage dips below minimum guaranteed MCU operation voltage, as these detection levels are below the minimum guaranteed MCU operation voltage.

- Please use these LVD channels with your own risk
- Please monitor the external power supplies on the PCB if needed

*5: When the voltage of Vcc12 is in the out of range against supply voltage operation assurance, the operation of circuit which Vcc12 used as the power source becomes unstable status. In this case, the value of each registers including RESCAUSEUR Register cannot be guaranteed, so these flags should not be used by software processing.

*: For the connections of smoothing capacitor C_S, see the following diagram.

C Pin Connection Diagram

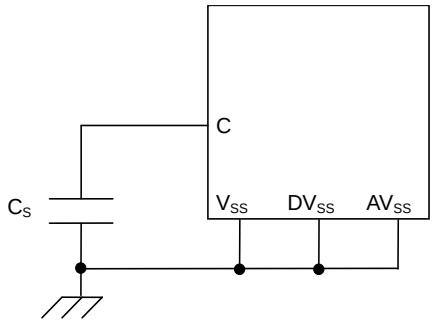

Notes:

- *The recommended operating conditions are required in order to ensure the normal operation of the semiconductor device. All of the electrical characteristics of the device are warranted when the device is operated within these ranges.*
  Always use semiconductor devices within their recommended operating condition ranges. Operation outside these ranges may adversely affect reliability and could result in device failure. No warranty is made with respect to uses, operating conditions, or combinations not represented on the data sheet. Users considering application outside the listed conditions are advised to contact sales representatives beforehand.
- *Required power supply sequence is the following:*
  {VCC5 -> AVCC5} -> [DVCC or VCC53 or VCC3 or AVCC3_DAC or VCC12]
  Note that power supplies inside "[ ]" can be turned on in arbitrary order and "{ }" can be turned on in shown sequence or simultaneously.

Notes:

- *T_A: Ambient temperature (JEDEC)*
- *T_C: Case temperature (JEDEC), the maximum measured temperature of package case top.*
- *Both rating of T_A and T_C should simultaneously be satisfied as maximum operation temperature.*
- *The following condition should be satisfied in order to facilitate heat dissipation.*
    1. *Four or more layers PCB should be used.*
    2. *The area of PCB should be 114.3 mm x 76.2 mm or more, and the thickness should be 1.6 mm or more. (JEDEC standard)*
    3. *One layer of middle layers at least should be used for dedicated layer to radiate heat with residual copper rate 90 % or more. The layer can be used for system ground.*
    4. *35 % or more of the die stage area which is exposed at back surface of package should be soldered to a part of 1st layer.*
    5. *The part of 1st layer should be connected to the dedicated heat radiation layer with more than 10 thermal via holes.*

Example thermal via holes on PCB



- *The above figure is a schematic diagram showing PCB in section.*
- *Thermal via holes should closely be placed and aligned with lands.*
- *It is recommended to connect the land pattern to the VSS-ground level (GND plan of inner layer bellow the MCU) as thermal heat sink.*

9.1.3 DC Characteristics

(T_A: Recommended operating conditions, $V_{CC}5$,$V_{CC}53$ = 5.0 V ± 10 %, $V_{CC}3$ = 3.3 V ± 0.3 V, V_{SS} = DV_{SS} = AV_{SS} = 0.0 V)

Parameter	Symbol	Pin Name	Conditions	Value			Unit	Remarks
				Min	Typ	Max		
"H" level Input voltage	V_{IH1}	P0_00 to P0_20, P2_09 to P2_19, P3_00 to P3_07, P3_24 to P3_31, P4_00 to P4_07	CMOS hysteresis input level is selected	0.7×$V_{CC}53$	-	$V_{CC}53$+0.3	V	
	V_{IH2}		Automotive input level is selected	0.8×$V_{CC}53$	-	$V_{CC}53$+0.3	V	
	V_{IH3}		TTL input level is selected	2.0	-	$V_{CC}53$+0.3	V	
	V_{IH4}	P1_03 to P1_16, P3_08 to P3_23, P4_08 to P4_23	CMOS hysteresis input level is selected	0.7×$V_{CC}5$	-	$V_{CC}5$+0.3	V	
	V_{IH5}		Automotive input level is selected	0.8×$V_{CC}5$	-	$V_{CC}5$+0.3	V	
	V_{IH6}	P1_09, P1_10, P1_15, P1_16	TTL input level is selected	2.0	-	$V_{CC}5$+0.3	V	
	V_{IH7}	P1_17 to P1_31, P2_00 to P2_08, P4_24 to P4_31	CMOS hysteresis input level is selected	0.7×DV_{CC}	-	DV_{CC}+0.3	V	
	V_{IH8}		Automotive input level is selected	0.8×DV_{CC}	-	DV_{CC}+0.3	V	
	V_{IH9}	RSTX NMIX	-	0.7×$V_{CC}5$	-	$V_{CC}5$+0.3	V	
	V_{IH10}	MD	-	0.7×$V_{CC}5$	-	$V_{CC}5$+0.3	V	
	V_{IH11}	JTAG_NTRST JTAG_TCK JTAG_TDI JTAG_TMS	-	2.7	-	$V_{CC}5$+0.3	V	
	V_{IH12}	P0_21 to P0_31, P1_00 to P1_02	CMOS hysteresis input level is selected	0.7×$V_{CC}3$	-	$V_{CC}3$+0.3	V	
	V_{IH13}	P0_21 to P0_31	TTL input level is selected	2.0	-	$V_{CC}3$+0.3	V	

(T_A: Recommended operating conditions, $V_{CC}5$,$V_{CC}53$ = 5.0 V ± 10 %, $V_{CC}3$ = 3.3 V ± 0.3 V, V_{SS} = DV_{SS} = AV_{SS} = 0.0 V)

Parameter	Symbol	Pin Name	Conditions	Value			Unit	Remarks
				Min	Typ	Max		
"L" level Input voltage	V_{IL1}	P0_00 to P0_20, P2_09 to P2_19, P3_00 to P3_07, P3_24 to P3_31, P4_00 to P4_07	CMOS hysteresis input level is selected	Vss-0.3	-	0.3×V_{CC}53	V	
	V_{IL2}		Automotive input level is selected	Vss-0.3	-	0.5×V_{CC}53	V	
	V_{IL3}		TTL input level is selected	Vss-0.3	-	0.8	V	
	V_{IL4}	P1_03 to P1_16, P3_08 to P3_23, P4_08 to P4_23	CMOS hysteresis input level is selected	Vss-0.3	-	0.3×V_{CC}5	V	
	V_{IL5}		Automotive input level is selected	Vss-0.3	-	0.5×V_{CC}5	V	
	V_{IL6}	P1_09, P1_10, P1_15, P1_16	TTL input level is selected	Vss-0.3	-	0.8	V	
	V_{IL7}	P1_17 to P1_31, P2_00 to P2_08, P4_24 to P4_31	CMOS hysteresis input level is selected	Vss-0.3	-	0.3×DV_{CC}	V	
	V_{IL8}		Automotive input level is selected	Vss-0.3	-	0.5×DV_{CC}	V	
	V_{IL9}	RSTX NMIX	-	Vss-0.3	-	0.3×V_{CC}5	V	
	V_{IL10}	MD	-	Vss-0.3	-	0.3×V_{CC}5	V	
	V_{IL11}	JTAG_NTRST JTAG_TCK JTAG_TDI JTAG_TMS	-	Vss-0.3	-	0.8	V	
	V_{IL12}	P0_21 to P0_31, P1_00 to P1_02	CMOS hysteresis input level is selected	Vss-0.3	-	0.3×V_{CC}3	V	
	V_{IL13}	P0_21 to P0_31	TTL input level is selected	Vss-0.3	-	0.8	V	
Hysteresis voltage	V_{HYS1}	P0_00 to P0_20, P2_09 to P2_19, P3_00 to P3_07, P3_24 to P3_31, P4_00 to P4_07	CMOS hysteresis input level is selected	-	0.05×V_{CC}53	-	V	
	V_{HYS2}		Automotive input level is selected	-	0.03×V_{CC}53	-	V	
	V_{HYS3}		TTL input level is selected	-	0.035	-	V	
	V_{HYS4}	P1_03 to P1_16, P3_08 to P3_23, P4_08 to P4_23	CMOS hysteresis input level is selected	-	0.05×V_{CC}5	-	V	
	V_{HYS5}		Automotive input level is selected	-	0.03×V_{CC}5	-	V	
	V_{HYS6}	P1_09, P1_10, P1_15, P1_16	TTL input level is selected	-	0.035	-	V	
	V_{HYS7}	P1_17 to P1_31, P2_00 to P2_08, P4_24 to P4_31	CMOS hysteresis input level is selected	-	0.05×DV_{CC}	-	V	
	V_{HYS8}		Automotive input level is selected	-	0.03×DV_{CC}	-	V	
	V_{HYS9}	RSTX NMIX	-	-	0.05×V_{CC}5	-	V	
	V_{HYS10}	MD	-	-	0.05×V_{CC}5	-	V	
	V_{HYS11}	JTAG_NTRST JTAG_TCK JTAG_TDI JTAG_TMS	-	-	0.035	-	V	
	V_{HYS12}	P0_21 to P0_31, P1_00 to P1_02	CMOS hysteresis input level is selected	-	0.05×V_{CC}3	-	V	
	V_{HYS13}	P0_21 to P0_31	TTL input level is selected	-	0.035	-	V	

(T_A: Recommended operating conditions, $V_{CC}5$,$V_{CC}53$,DV_{CC} = 5.0 V ± 10 %, $V_{CC}3$ = 3.3 V ± 0.3 V, V_{SS} = DV_{SS} = AV_{SS} = 0.0 V)

Parameter	Symbol	Pin Name	Conditions	Value			Unit	Remarks
				Min	Typ	Max		
"H" level output voltage	V_{OH1}	P0_00 to P0_19, P2_09 to P2_11, P2_13 to P2_19, P3_00 to P3_07, P3_24 to P3_31, P4_00 to P4_07	$V_{CC}53$=4.5 V I_{OH}=-1.0 mA $V_{CC}53$=3.0 V I_{OH}=-0.5 mA	$V_{CC}53$ - 0.5	-	$V_{CC}53$	V	ODR[1:0]= 2b00
	V_{OH2}		$V_{CC}53$=4.5 V I_{OH}=-2.0 mA $V_{CC}53$=3.0 V I_{OH}=-1.0 mA	$V_{CC}53$ - 0.5	-	$V_{CC}53$	V	ODR[1:0]= 2b01
	V_{OH3}		$V_{CC}53$=4.5 V I_{OH}=-5.0 mA $V_{CC}53$=3.0 V I_{OH}=-2.0 mA	$V_{CC}53$ - 0.5	-	$V_{CC}53$	V	ODR[1:0]= 2b10
	V_{OH4}	P1_03 to P1_16, P3_08 to P3_23, P4_08 to P4_23	$V_{CC}5$=4.5 V I_{OH}=-1.0 mA	$V_{CC}5$ - 0.5	-	$V_{CC}5$	V	
	V_{OH5}		$V_{CC}5$=4.5 V I_{OH}=-2.0 mA	$V_{CC}5$ - 0.5	-	$V_{CC}5$	V	
	V_{OH6}		$V_{CC}5$=4.5 V I_{OH}=-5.0 mA	$V_{CC}5$ - 0.5	-	$V_{CC}5$	V	
	V_{OH7}	PSC_1	$V_{CC}5$=4.5 V I_{OH}=-2.0 mA	$V_{CC}5$ - 0.5	-	$V_{CC}5$	V	
	V_{OH8}	JTAG_TDO	$V_{CC}5$=4.5 V I_{OH}=-5.0 mA	$V_{CC}5$ - 0.5	-	$V_{CC}5$	V	
	V_{OH10}	P1_17 to P1_31, P2_00 to P2_08, P4_24 to P4_31	DV_{CC}=4.5 V I_{OH}=-1.0 mA	DV_{CC} - 0.5	-	DV_{CC}	V	
	V_{OH11}		DV_{CC}=4.5 V I_{OH}=-2.0 mA	DV_{CC} - 0.5	-	DV_{CC}	V	
	V_{OH12}		DV_{CC}=4.5 V I_{OH}=-5.0 mA	DV_{CC} - 0.5	-	DV_{CC}	V	
	V_{OH13}		DV_{CC}=4.5 V I_{OH}=-30.0 mA	DV_{CC} - 0.5	-	DV_{CC}	V	
	V_{OH14}		DV_{CC}=4.5 V I_{OH}=-40.0 mA	DV_{CC} - 0.5	-	DV_{CC}	V	Tj = -40°C
	V_{OH15}	P0_21 to P0_31, P1_00 to P1_02	$V_{CC}3$=3.0 V I_{OH}=-2.0 mA	$V_{CC}3$ - 0.5	-	$V_{CC}3$	V	
	V_{OH16}		$V_{CC}3$=3.0 V I_{OH}=-5.0 mA	$V_{CC}3$ - 0.5	-	$V_{CC}3$	V	
	V_{OH17}		$V_{CC}3$=3.0 V I_{OH}=-6.0 mA	$V_{CC}3$ - 0.5	-	$V_{CC}3$	V	
	V_{OH18}		$V_{CC}3$=3.0 V I_{OH}=-15.0 mA	$V_{CC}3$ - 0. 5	-	$V_{CC}3$	V	

(T_A: Recommended operating conditions, $V_{CC}5$,$V_{CC}53$,DV_{CC} = 5.0 V ± 10 %, $V_{CC}3$=3.3 V ± 0.3 V, V_{SS} = DV_{SS} = AV_{SS} = 0.0 V)

Parameter	Symbol	Pin Name	Conditions	Value			Unit	Remarks
				Min	Typ	Max		
"H" level output voltage	V_{OH19}	P2_12	$V_{CC}53$ = 4.5 V I_{OH} = -1.0 mA	$V_{CC}53$ - 0.5	-	$V_{CC}53$	V	ODR[1:0] = 2b00
	V_{OH20}		$V_{CC}53$ = 3.0 V I_{OH} = -0.5 mA					
	V_{OH21}		$V_{CC}53$ = 4.5 V I_{OH} = -2.0 mA	$V_{CC}53$ - 0.5	-	$V_{CC}53$	V	ODR[1:0] = 2b01
	V_{OH22}		$V_{CC}53$ = 3.0 V I_{OH} = -1.0 mA					
	V_{OH23}		$V_{CC}53$ = 4.5 V I_{OH} = -5.0 mA	$V_{CC}53$ - 0.5	-	$V_{CC}53$	V	ODR[1:0] = 2b10
	V_{OH24}		$V_{CC}53$ = 3.0 V I_{OH} = -2.0 mA					
	V_{OH26}		$V_{CC}53$ = 3.0 V I_{OH} = -15.0 mA	$V_{CC}53$ - 0.5	-	Vcc53	V	ODR[1:0] = 2b11

(T_A: Recommended operating conditions, $V_{CC}5$,$V_{CC}53$,DV_{CC} = 5.0 V ± 10%, $V_{CC}3$ = 3.3 V ± 0.3 V, V_{SS} = DV_{SS} = AV_{SS} = 0.0 V)

Parameter	Symbol	Pin Name	Conditions	Value			Unit	Remarks
				Min	Typ	Max		
"L" level output voltage	V_{OL1}	P0_00 to P0_19, P2_09 to P2_11, P2_13 to P2_19, P3_00 to P3_07, P3_24 to P3_31, P4_00 to P4_07	$V_{CC}53$ = 4.5 V I_{OL} = 1.0 mA $V_{CC}53$ = 3.0 V I_{OL} = 0.5 mA	0	-	0.4	V	ODR[1:0]=2 b00
	V_{OL2}		$V_{CC}53$ = 4.5 V I_{OL} = 2.0 mA $V_{CC}53$ = 3.0 V I_{OL} = 1.0 mA	0	-	0.4	V	ODR[1:0]=2 b01
	V_{OL3}		$V_{CC}53$ = 4.5 V I_{OL} = 5.0 mA $V_{CC}53$ = 3.0 V I_{OL} = 2.0 mA	0	-	0.4	V	ODR[1:0]=2 b10
	V_{OL4}	P1_03 to P1_16, P3_08 to P3_23, P4_08 to P4_23	$V_{CC}5$ = 4.5 V I_{OL} = 1.0 mA	0	-	0.4	V	
	V_{OL5}		$V_{CC}5$ = 4.5 V I_{OL} = 2.0 mA	0	-	0.4	V	
	V_{OL6}		$V_{CC}5$ = 4.5 V I_{OL} = 5.0 mA	0	-	0.4	V	
	V_{OL7}	PSC_1	$V_{CC}5$ = 4.5 V I_{OL} = 2.0 mA	0	-	0.4	V	
	V_{OL8}	JTAG_TDO	$V_{CC}5$ = 4.5 V I_{OL} = 5.0 mA	0	-	0.4	V	
	V_{OL9}	P1_09, P1_10, P1_15, P1_16	$V_{CC}5$ = 4.5 V I_{OL} = 3.0 mA	0	-	0.4	V	I^2C
	V_{OL10}	P1_17 to P1_31, P2_00 to P2_08, P4_24 to P4_31	DV_{CC} = 4.5 V I_{OL} = 1.0 mA	0	-	0.4	V	
	V_{OL11}		DV_{CC} = 4.5 V I_{OL} = 2.0 mA	0	-	0.4	V	
	V_{OL12}		DV_{CC} = 4.5 V I_{OL} = 5.0 mA	0	-	0.4	V	
	V_{OL13}		DV_{CC} = 4.5 V I_{OL} = 30.0 mA	0	-	0.55	V	
	V_{OL14}		DV_{CC} = 4.5 V I_{OL} = 40.0 mA	0	-	0.55	V	Tj = -40°C
	V_{OL15}	P0_21 to P0_31, P1_00 to P1_02	$V_{CC}3$ = 3.0 V I_{OL} = 2.0 mA	0	-	0.4	V	
	V_{OL16}		$V_{CC}3$ = 3.0 V I_{OL} = 5.0 mA	0	-	0.4	V	
	V_{OL17}		$V_{CC}3$ = 3.0 V I_{OL} = 6.0 mA	0	-	0.4	V	
	V_{OL18}		$V_{CC}3$ = 3.0 V I_{OL} = 15.0 mA	0	-	0.4	V	

(T_A: Recommended operating conditions, $V_{CC}5$,$V_{CC}53$,DV_{CC} = 5.0 V ± 10 %, $V_{CC}3$ = 3.3 V ± 0.3 V, V_{SS} = DV_{SS} = AV_{SS} = 0.0 V)

Parameter	Symbol	Pin Name	Conditions	Value			Unit	Remarks
				Min	Typ	Max		
"L" level output voltage	V_{OL19}	P2_12	$V_{CC}53$ = 4.5 V I_{OL} = 1.0 mA	0	-	0.4	V	ODR[1:0] = 2b00
	V_{OL20}		$V_{CC}53$ = 3.0 V I_{OL} = 0.5 mA					
	V_{OL21}		$V_{CC}53$ = 4.5 V I_{OL} = 2.0 mA	0	-	0.4	V	ODR[1:0] = 2b01
	V_{OL22}		$V_{CC}53$ = 3.0 V I_{OL} = 1.0 mA					
	V_{OL23}		$V_{CC}53$ = 4.5 V I_{OL} = 5.0 mA	0	-	0.4	V	ODR[1:0] = 2b10
	V_{OL24}		$V_{CC}53$ = 3.0 V I_{OL} = 2.0 mA					
	V_{OL26}		$V_{CC}53$ = 3.0 V I_{OL} = 15.0 mA	0	-	0.4	V	ODR[1:0] = 2b11

(T_A: Recommended operating conditions, $V_{CC}5$,$V_{CC}53$,DV_{CC} = 5.0 V ± 10 %, $V_{CC}3$ = 3.3 V ± 0.3 V, V_{SS} = DV_{SS} = AV_{SS} = 0.0 V)

Parameter	Symbol	Pin Name	Conditions	Value			Unit	Remarks
				Min	Typ	Max		
Input leakage current	I_{IL}	P0_00 to P0_20, P1_03 to P1_31, P2_00 to P2_19, P3_00 to P3_31, P4_00 to P4_31	$V_{CC}5$ = $V_{CC}53$ = DV_{CC} = AV_{CC} = 5.5 V V_{SS} < VI < V_{CC}	-5	-	+5	µA	5 V pins 5 V/3 V pins
		P0_21 to P0_31, P1_00 to P1_02	$V_{CC}3$ = 3.6 V V_{SS} < VI < $V_{CC}3$	-10	-	+10	µA	3 V pins
Pull-up resistor	R_{UP1}	RSTX, NMIX	-	25	50	100	kΩ	
	R_{UP2}	P0_00 to P0_20, P1_03 to P1_31, P2_00 to P2_19, P3_00 to P3_31, P4_00 to P4_31	Pull-up resistor selected	25	50	100	kΩ	5 V pins 5 V/3 V pins
	R_{UP3}	P0_21 to P0_31, P1_00 to P1_02	Pull-up resistor selected	17	50	66	kΩ	3 V pins
	R_{UP4}	JTAG_TDI, JTAG_TMS, JTAG_TCK	-	25	50	100	kΩ	
Pull-down resistor	R_{down1}	P0_00 to P0_20, P1_03 to P1_31, P2_00 to P2_19, P3_00 to P3_31, P4_00 to P4_31	Pull-down resistor selected	25	50	100	kΩ	5 V pins 5 V/3 V pins
	R_{down2}	P0_21 to P0_31, P1_00 to P1_02	Pull-down resistor selected	17	50	66	kΩ	3 V pins
	R_{down3}	JTAG_NTRST	-	25	50	100	kΩ	
Input capacitance	C_{IN1}	P0_00 to P0_31, P1_00 to P1_16, P2_09 to P2_19, P3_00 to P3_31, P4_00 to P4_23	-	-	5	15	pF	
	C_{IN2}	P1_17 to P1_31, P2_00 to P2_08, P4_24 to P4_31	-	-	15	45	pF	When using I_{OH}/I_{OL} 30.0mA, and 40.0mA

(T_A: Recommended operating conditions, $V_{CC}5$,$V_{CC}53$,DV_{CC} = 5.0 V ± 10 %, $V_{CC}3$ = 3.3 V ± 0.3 V, $V_{CC}12$ = 1.15 V ± 0.06 V, V_{SS} = DV_{SS} = AV_{SS} = 0.0 V)

Parameter	Symbol	Pin Name	Conditions	Value			Unit	Remarks
				Min	Typ	Max		
Power supply current	I_{CC12}	VCC12	Normal operation	-	315	775	mA	T_A = -40 ~ 105°C CPU:240 MHz, HPM:120 MHz (CPU:200 MHz, HPM:200 MHz)
				-	210	665	mA	T_A = -40 ~125°C CPU:180 MHz, HPM:90 MHz,
			Flash write/erase	-	320	780	mA	T_A = -40 ~ 105°C CPU:240 MHz, HPM:120 MHz (CPU:200 MHz, HPM:200 MHz)
				-	215	670	mA	T_A = -40 ~ 125°C CPU:180 MHz, HPM:90 MHz,
	I_{CCH12}		Timer/ Stop Mode	-	-	420	mA	
	I_{CC5}	VCC5	Normal operation	-	25	45	mA	
			Flash write/erase	-	-	60	mA	
	I_{CCT5}		Timer mode	-	370	810	µA	T_A = 25 °C. 4 MHz crystal for main oscillator. PD1 = ON, PD4_0 = ON, PD4_1 = ON
				-	360	780	µA	T_A = 25 °C. 4 MHz crystal for main oscillator. PD1 = ON, PD4_0 = ON or PD4_1 = ON
				-	350	750	µA	T_A = 25 °C. 4 MHz crystal for main oscillator. PD1 = ON
				-	450	890	µA	T_A = 25 °C. 8 MHz crystal for main oscillator PD1 = ON, PD4_0 = ON, PD4_1 = ON
				-	440	860	µA	T_A = 25 °C. 8 MHz crystal for main oscillator. PD1 = ON, PD4_0 = ON or PD4_1 = ON
				-	430	830	µA	T_A = 25 °C. 8 MHz crystal for main oscillator. PD1 = ON
				-	110	430	µA	T_A = 25 °C. 32 kHz crystal for sub oscillator PD1 = ON, PD4_0 = ON, PD4_1 = ON
				-	100	400	µA	T_A = 25 °C. 32 kHz crystal for sub oscillator. PD1 = ON, PD4_0 = ON or PD4_1 = ON
				-	90	370	µA	T_A = 25 °C. 32 kHz crystal for sub oscillator. PD1 = ON

(T_A: Recommended operating conditions, $V_{CC}5$,$V_{CC}53$, DV_{CC} = 5.0 V ± 10 %, $V_{CC}3$ = 3.3 V ± 0.3 V, $V_{CC}12$ = 1.15 V ± 0.06 V, V_{SS} = DV_{SS} = AV_{SS} = 0.0 V)

Parameter	Symbol	Pin Name	Conditions	Value			Unit	Remarks
				Min	Typ	Max		
Power supply current	I_{CCH5}	VCC5	Stop mode	-	100	400	µA	T_A = 25 °C. PD1 = ON, PD4_0 = ON, PD4_1 = ON
				-	90	370	µA	T_A = 25 °C. PD1 = ON, PD4_0 = ON or PD4_1 = ON
				-	80	340	µA	T_A = 25 °C. PD1 = ON

(T_A: Recommended operating conditions, $V_{CC}5$,$V_{CC}53$,DV_{CC} = 5.0 V ± 10 %, $V_{CC}3$ = 3.3 V ± 0.3 V, $V_{CC}12$ = 1.15 V ± 0.06 V, V_{SS} = DV_{SS} = AV_{SS} =0.0 V)

Parameter	Symbol	Pin Name	Conditions	Value			Unit	Remarks
				Min	Typ	Max		
Power supply current *	I_{CCT5}	VCC5	Timer mode	-	345	630	µA	T_A = 25 °C. 4 MHz crystal for main oscillator PD1 = ON, PD4_0 = ON, PD4_1 = ON
				-	340	625	µA	TA = 25 °C. 4 MHz crystal for main oscillator. PD1 = ON, PD4_0 = ON or PD4_1 = ON
				-	335	620	µA	T_A = 25°C. 4 MHz crystal for main oscillator. PD1 = ON
				-	420	705	µA	T_A = 25 °C. 8 MHz crystal for main oscillator PD1 = ON, PD4_0 = ON, PD4_1 = ON
				-	415	700	µA	T_A = 25 °C. 8 MHz crystal for main oscillator. PD1 = ON, PD4_0 = ON or PD4_1 = ON
				-	410	695	µA	T_A = 25 °C. 8 MHz crystal for main oscillator. PD1 = ON
				-	80	135	µA	T_A = 25 °C. 32 kHz crystal for sub oscillator PD1 = ON, PD4_0 = ON, PD4_1 = ON
				-	75	130	µA	T_A = 25 °C. 32 kHz crystal for sub oscillator. PD1 = ON, PD4_0 = ON or PD4_1 = ON
				-	70	125	µA	T_A = 25 °C. 32 kHz crystal for sub oscillator. PD1 = ON
	I_{CCH5}		Stop mode	-	75	130	µA	T_A = 25 °C. PD1 = ON, PD4_0 = ON, PD4_1 = ON
				-	70	125	µA	T_A = 25 °C. PD1 = ON, PD4_0 = ON or PD4_1 = ON
				-	65	120	µA	T_A = 25 °C. PD1 = ON

* Electric Characteristics for S6J335xxxE.

(T_A: Recommended operating conditions, $V_{CC}5$,$V_{CC}53$,DV_{CC} = 5.0 V ± 10 %, $V_{CC}3$ = 3.3 V ± 0.3 V, $V_{CC}12$ = 1.15 V ± 0.06 V, V_{SS} = DV_{SS} = AV_{SS} = 0.0 V)

Parameter	Symbol	Pin Name	Conditions	Value			Unit	Remarks
				Min	Typ	Max		
High current output drive capacity Phase-to-phase deviation1	Delta-V_{OH13}	P1_17 to P1_31, P2_00 to P2_08	DV_{CC} = 4.5V I_{OH} = -30.0mA Maximum deviation of V_{OH13}	-	-	90	mV	*
High current output drive capacity Phase-to-phase deviation2	Delta-V_{OL13}		DV_{CC} = 4.5V I_{OL} = 30.0mA Maximum deviation of V_{OL13}	-	-	90	mV	*

*: If P1_17 to P1_20 is turned on simultaneously, the maximum deviation of V_{OH13} / V_{OL13} for each pin is defined. Same for other channels.of P1_21 to P1_24, P1_25 to P1_28, P1_29 to P1_31 and P2_00, P2_01 to P2_04, and P2_05 to P2_08 .

9.1.4 AC Characteristics

9.1.4.1 Source Clock Timing

(T_A: Recommended operating conditions, Vcc5 = 5.0 V ± 10 %, V_{SS} = DV_{SS} = AV_{SS} = 0.0 V)

Parameter	Symbol	Pin Name	Conditions	Value			Unit	Remarks
				Min	Typ	Max		
Source oscillation clock frequency	F_C	X0, X1	-	3.6	-	16.0	MHz	
Source oscillation clock cycle time	t_{CYL}	X0, X1	-	62.5	-	277.8	ns	
CAN PLL jitter (when locked)	t_{PJ}	-	-	-10	-	10	ns	
Internal Slow CR oscillation frequency	F_{CRS}	-	-	50	100	150	kHz	
Internal Fast CR oscillation frequency	F_{CRF}	-	-	2.40	4.00	5.61-	MHz	Before trim
				3.20	4.00	4.81	MHz	After trim

Notes:

- *The maximum/minimum values have been standardized with the main clock and PLL clock in use.*
- *Jitter of source oscillator must be smaller than 300ppm.*
- *Enough evaluation and adjustment are recommended using oscillator on your system board.*

- X0 and X1 clock timing

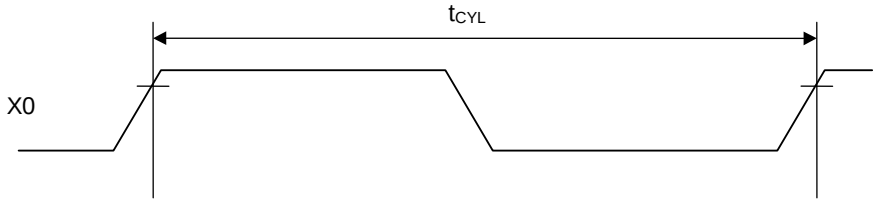

CAN PLL jitter

A time difference from the ideal clock is guaranteed for each cycle period within 20,000 cycles.

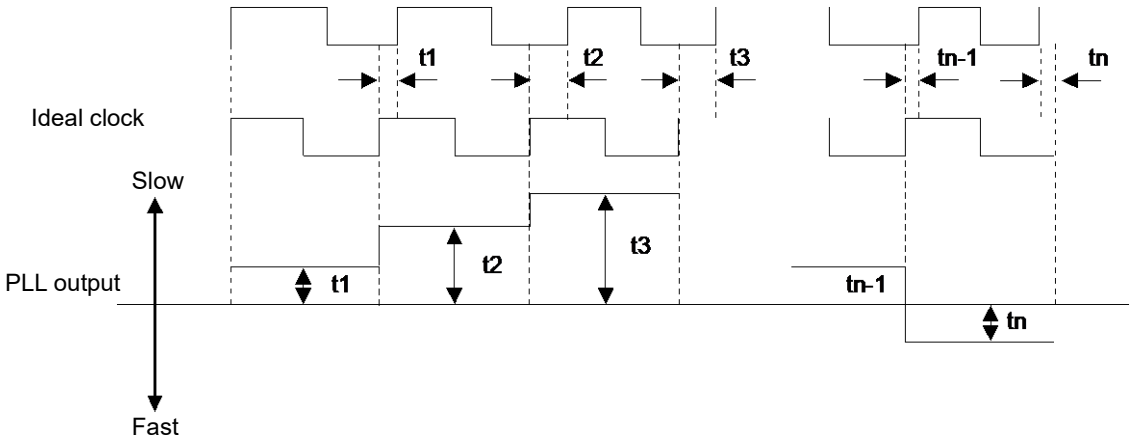

9.1.4.2 Sub Clock Timing

(T_A: Recommended operating conditions, Vcc5 = 5.0 V ±10 %, V_{SS} = DV_{SS} = AV_{SS} = 0.0 V)

Parameter	Symbol	Pin Name	Conditions	Value			Unit	Remarks
				Min	Typ	Max		
Source oscillation clock frequency	F_{CL}	X0A, X1A	-	-	32.768	-	kHz	
Source oscillation clock cycle time	t_{LCYL}	X0A, X1A	-	-	30.52	-	µs	

- X0A and X1A clock timing

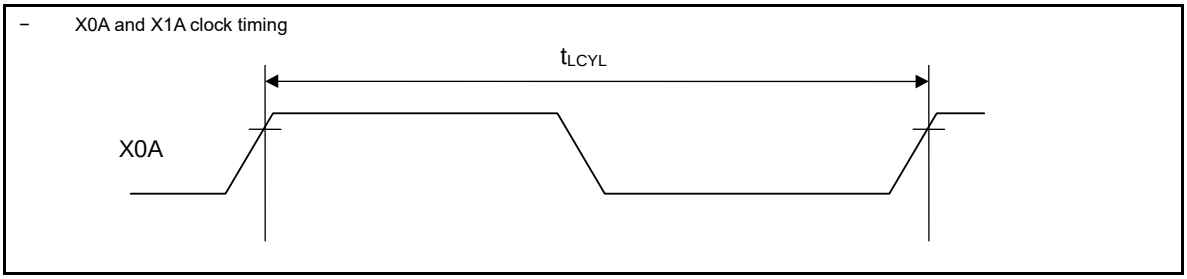

9.1.4.3 Internal Clock Timing

- This chapter shows the TARGET characteristics for internal clock timing at the current stage.
- In the column symbol, same clock names as described in CHAPTER 5: CLOCK SYSTEM of TRAVEO™ T1G Platform Hardware Manual are used.
- Corresponding functions for these clocks are described in CHAPTER 5: CLOCK CONFIGURATION of S6J3300 series hardware manual.

(T_A: Recommended operating conditions, $V_{CC}5$ = 5.0 V ±10 %, $V_{CC}12$ = 1.15 V ±0.06 V, V_{SS} = 0.0 V)

Parameter	Symbol	Value			Unit	Remarks
		Max *1	Max *2	Max *3		
Internal clock frequency	F_{SSCG0}	480	400	360	MHz	SSCG0 output clock *4
	F_{SSCG1}	400	400	400	MHz	SSCG1 output clock *4
	F_{SSCG2}	320	320	320	MHz	SSCG2 output clock *4
	F_{SSCG3}	400	400	400	MHz	SSCG3 output clock *4
	F_{PLL0}	480	400	360	MHz	PLL0 output clock *4
	F_{PLL1}	400	400	400	MHz	PLL1 output clock *4
	F_{PLL2}	400	400	400	MHz	PLL2 output clock *4
	F_{PLL3}	480	480	480	MHz	PLL3 output clock *4
	F_{CLK_CPU0}	240	200	180	MHz	
	F_{CLK_SHE}	240	200	180	MHz	
	F_{CLK_FCLK}	80	66.7	90	MHz	
	F_{CLK_ATB}	120	100	90	MHz	
	F_{CLK_DBG}	120	100	90	MHz	
	F_{CLK_HPM}	120	200	180	MHz	
	F_{CLK_HPM2}	60	100	90	MHz	
	F_{CLK_DMA}	120	200	180	MHz	
	F_{CLK_MEMC}	120	200	180	MHz	
	F_{CLK_EXTBUS}	40	40	30	MHz	
	F_{CLK_SYSC1}	40	40	60	MHz	
	$F_{CLK_HAPP0A0}$	40	40	30	MHz	Unused
	$F_{CLK_HAPP0A1}$	40	40	30	MHz	Unused
	$F_{CLK_HAPP1B0}$	80	50	60	MHz	
	$F_{CLK_HAPP1B1}$	40	50	30	MHz	Unused
	F_{CLK_LLPBM}	240	200	180	MHz	
	F_{CLK_LLPBM2}	120	100	90	MHz	
	F_{CLK_LCP}	80	50	60	MHz	
	F_{CLK_LCP0}	40	40	30	MHz	
	F_{CLK_LCP0A}	80	66.7	60	MHz	
	F_{CLK_LCP1}	40	40	30	MHz	Unused
	F_{CLK_LCP1A}	80	66.7	60	MHz	
	F_{CLK_LAPP0}	40	40	30	MHz	Unused
	F_{CLK_LAPP0A}	40	40	30	MHz	Unused
	F_{CLK_LAPP1}	40	40	30	MHz	Unused
	F_{CLK_LAPP1A}	40	40	30	MHz	Unused
	F_{CLK_TRC}	100	100	100	MHz	
	F_{CLK_CD1}	200	200	200	MHz	
	F_{CLK_CD1A0}	100	100	100	MHz	Unused
	F_{CLK_CD1A1}	100	100	100	MHz	Unused
	F_{CLK_CD1B0}	100	100	100	MHz	Unused
	F_{CLK_CD1B1}	100	100	100	MHz	Unused
	F_{CLK_CD2}	200	200	200	MHz	Unused
	F_{CLK_CD2A0}	200	200	200	MHz	Unused
	F_{CLK_CD2A1}	200	200	200	MHz	Unused
	F_{CLK_CD2B0}	200	200	200	MHz	Unused
	F_{CLK_CD2B1}	200	200	200	MHz	Unused
	F_{CLK_CD3}	80	80	80	MHz	Unused
	F_{CLK_CD3A0}	80	80	80	MHz	Unused
	F_{CLK_CD3A1}	80	80	80	MHz	Unused

Parameter	Symbol	Value			Unit	Remarks
		Max *1	Max *2	Max *3		
Internal clock frequency	F_{CLK_CD3B0}	80	80	80	MHz	Unused
	F_{CLK_CD3B1}	80	80	80	MHz	Unused
	F_{CLK_CD4}	200	200	200	MHz	Unused
	F_{CLK_CD4A0}	200	200	200	MHz	Unused
	F_{CLK_CD4A1}	200	200	200	MHz	Unused
	F_{CLK_CD4B0}	200	200	200	MHz	Unused
	F_{CLK_CD4B1}	200	200	200	MHz	Unused
	F_{CLK_CD5}	240	240	240	MHz	Unused
	F_{CLK_CD5A0}	120	120	120	MHz	Unused
	F_{CLK_CD5A1}	120	120	120	MHz	Unused
	F_{CLK_CD5B0}	60	60	60	MHz	Unused
	F_{CLK_CD5B1}	60	60	60	MHz	Unused
	F_{CLK_HSSPI}	200	200	200	MHz	
	F_{CLK_SYSC0H}	80	66.7	60	MHz	
	F_{CLK_COMH}	80	66.7	60	MHz	
	F_{CLK_RAM0H}	80	66.7	60	MHz	
	F_{CLK_RAM1H}	80	66.7	60	MHz	
	F_{CLK_SYSC0P}	80	66.7	60	MHz	
	F_{CLK_COMP}	80	66.7	60	MHz	

Notes:

- *1: Target maximum clock frequencies when CPU clock = 240 MHz
- *2: Target maximum clock frequencies when CPU clock = 200 MHz
- *3: Target maximum clock frequencies when CPU clock = 180 MHz
- *4: The PLLx/SSCGx cannot set under 200 MHz
- Note that Ta = 125 condition is not supported in *1 and *2 use case.

Please set to *3 when device Ta = 125.

When using SSCG_PLL output for these internal clock, the MAX value of frequency has the following restrictions.

- On the presumption that the modulation mode of SSCG_PLL is used with down spread,

the MAX value of the frequency is standardized.

- This means that MAX value of frequency is the maximum value when SSCG_PLL was modulated.
- "Unused" means a clock source which doesn't have any supply destinations. Configure these clocks to a lower clock frequency than the described maximum.

- Operation assurance range

Relationship between the internal clock frequency and supply voltage

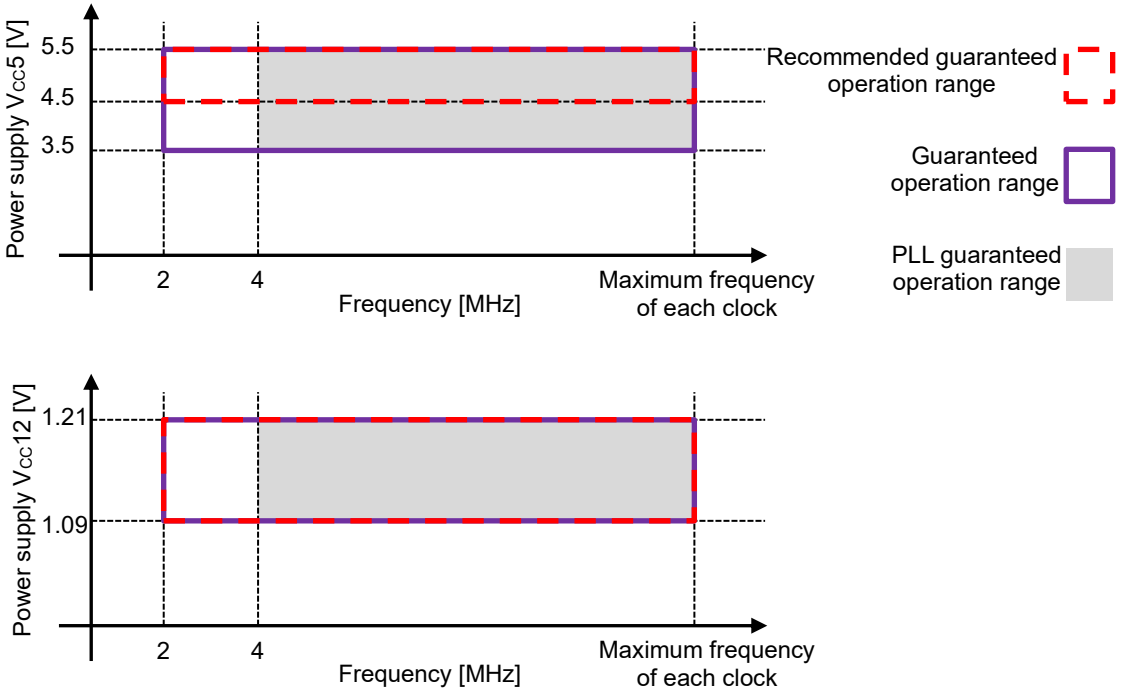

Note: CPU will be reset, when the power supply voltage is equal to or less than LVD setting voltage.

- Relationship between the oscillation clock frequency and internal clock frequency

		Internal Operation Clock Frequency							
		Main Clock	PLL Clock						
			Multiplied by 1	Multiplied by 2		Multiplied by 15	Multiplied by 30	Multiplied by 40	Multiplied by 60
Oscillation clock frequency [MHz]	4	2	4	8	…	60	120	160	240
	8	4	8	16	…	120	240		
	16	8	16	32	…	240			

- Oscillation circuit example

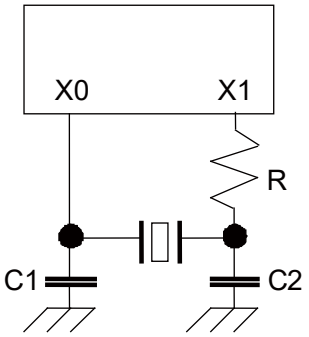

Note:
For the configuration of an oscillation circuit, request the oscillator manufacturer to perform a circuit matching evaluation before starting design.

AC characteristics are specified by the following measurement reference voltage values.

- Input signal waveform

Hysteresis input pin (Automotive)

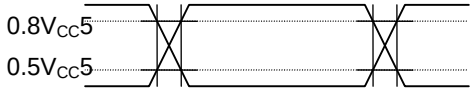

Hysteresis input pin (CMOS Schmitt)

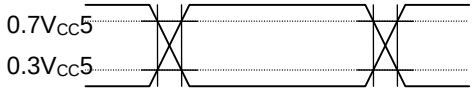

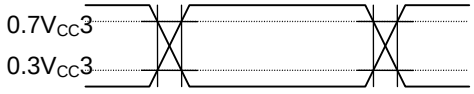

Hysteresis input pin (TTL)

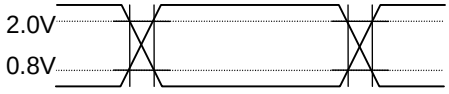

- Output signal waveform

Output pin

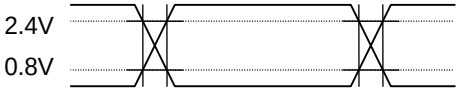

9.1.4.4 *Reset Input*

(T_A: Recommended operating conditions, Vcc5 = 5.0 V ±10 %, V_{SS} = 0.0 V)

Parameter	Symbol	Pin Name	Conditions	Value		Unit	Remarks
				Min	Max		
Reset input time	t_{RSTL}	RSTX	-	10	-	µs	
Width for reset input removal				1	-	µs	

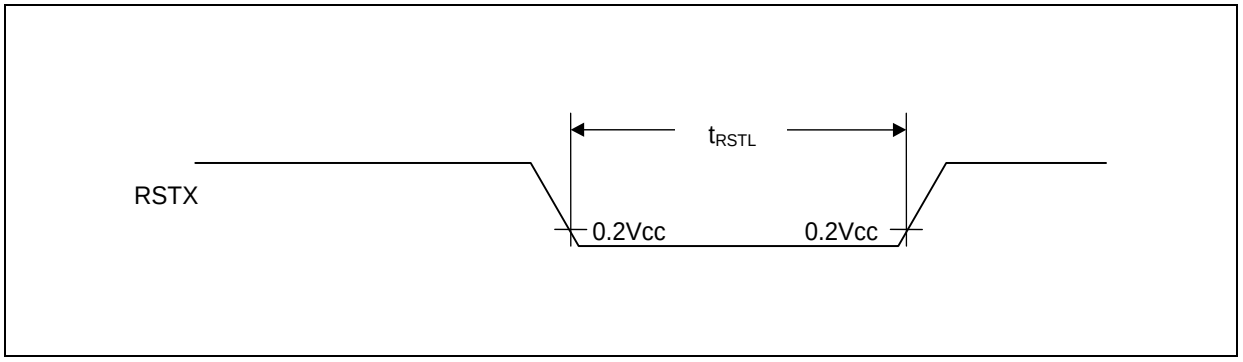

9.1.4.5 Power-on Conditions

(T_A: Recommended operating conditions, V_{SS} = 0.0 V)

Parameter	Symbol	Pin Name	Conditions	Value			Unit	Remarks
				Min	Typ	Max		
Level detection voltage	-	VCC5	-	2.2	2.4	2.6	V	
Level detection hysteresis width	-	VCC5	-	-	100	-	mV	
Level detection time	-	-	-	-	-	40	µs	*1
Power off time	t_{OFF}	VCC5	-	100	-	-	µs	*2
Power ramp rate	dV/dt	VCC5	VCC5: 1.5V to 2.6V	-	-	1	V/µs	*3
Maximum ramp rate guaranteed to not generate power-on reset	|dV/dt|	VCC5	VCC5: Between 2.4V and 4.5V	-	-	50	mV/µs	*4

*1: This specification is at 1V/µs of power ramp rate.

*2: VCC5 must be held below 1.5V for a minimum period of t_{OFF}.

*3: Power ramp rate must be 1V/us or less from 1.5V to 2.6V.
Power-on can detect by satisfying power ramp rate when power off time is satisfied.

*4: This specification is specified the power supply fluctuation after power on detection. When VCC5 voltage is between 2.4V and 4.5V, the power supply fluctuation is below 50mV/us, the detection of power-on is suppressed. The power-on does not detect in any power fluctuation between 4.5V and 5.5V.

Notes:

When using S6J3350, *2 and *3 must be satisfied. When neither *2 nor *3 can be satisfied, assert external reset (RSTX) at power up and any brownout event.

- **Power off time, Power ramp rate**

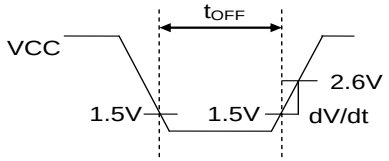

- **Maximum ramp rate guaranteed to not generate power-on reset**

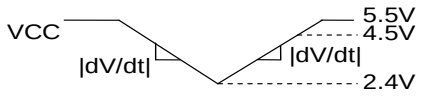

9.1.4.6 Multi-Function Serial

UART (asynchronous serial interface) timing (SMR:MD2-0 = 0b000, 0b001)

(1) External Clock Selected (BGR: EXT = 1)

(T_A: Recommended operating conditions, Vcc3 = 3.3 V ± 0.3 V, Vcc5 = DVcc = 5.0 V ±10 % / 3.3 V ± 0.3 V , Vcc53 = 5.0 V ± 10 % / 3.3 V ± 0.3 V, V_{SS} = DV_{SS} = 0.0 V, $V_{CC}12$ = 1.15 V ±0.06 V)

Parameter	Symbol	Pin Name	Conditions	Value		Unit	Remarks
				Min	Max		
Serial clock "L" pulse width	t_{SLSH}	SCK0 to SCK4, SCK8 to SCK12	-	$2t_{CLK_LCPnA}$*1 +10	-	ns	
		SCK16 to SCK17		$2t_{CLK_COMP}$ +10	-	ns	
Serial clock "H" pulse width	t_{SHSL}	SCK0 to SCK4, SCK8 to SCK12		$2t_{CLK_LCPnA}$*1 +10	-	ns	
		SCK16 to SCK17		$2t_{CLK_COMP}$ +10	-	ns	
SCK falling time	t_F	SCK0 to SCK4, SCK8 to SCK12, SCK16 to SCK17		-	5	ns	
SCK rising time	t_R			-	5	ns	

*1: n = 0:ch.0 to ch.4, n = 1:ch.8 to ch.12

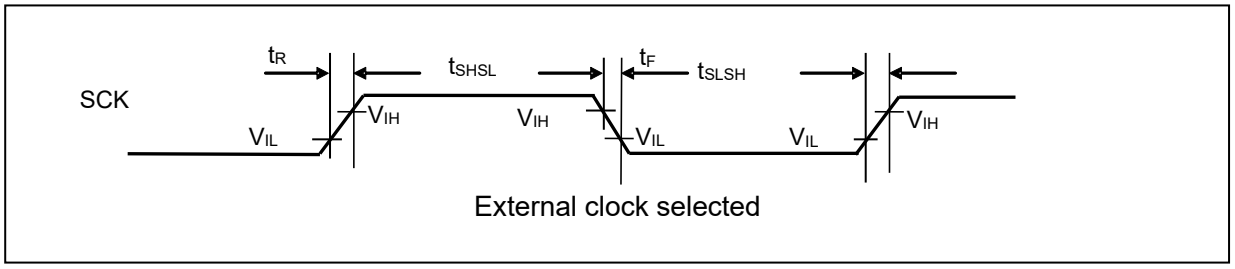

CSIO timing (SMR:MD2-0 = 0b010)

(1) Normal Synchronous Transfer (SCR: SPI = 0) and Mark Level "H" of Serial Clock Output (SMR: SCINV = 0)

(T_A: Recommended operating conditions, Vcc3 = 3.3 V ±0.3V, Vcc5 = DVcc = 5.0 V ± 10 % / 3.3 V ± 0.3 V, Vcc53 = 5.0 V ± 10% / 3.3 V ±0.3 V, V_{SS} = DV_{SS} = 0.0 V, $V_{CC}12$ = 1.15 V ± 0.06 V)

Parameter	Symbol	Pin Name	Conditions	Value		Unit	Remarks
				Min	Max		
Serial clock cycle time	t_{SCYC}	SCK0, SCK1, SCK2_1, SCK3_1, SCK4, SCK8 to SCK12	Master Mode (CL = 20pF, I_{OL} = -5mA, I_{OH} = 5mA)	$8t_{CLK_LCPnA}$*1	-	ns	-
		SCK16 to SCK17		$8t_{CLK_COMP}$	-	ns	
SCK ↓ → SOT delay time	t_{SLOVI}	SCK0, SCK1, SCK2_1, SCK3_1, SCK4, SCK8 to SCK12, SCK16 to SCK17 SOT0, SOT1, SOT2_1, SOT3_1, SOT4, SOT8 to SOT12, SOT16 to SOT17		-30	+30	ns	
Valid SIN → SCK ↑ setup time	t_{IVSHI}	SCK0, SCK1, SCK2_1, SCK3_1, SCK4, SCK8 to SCK12, SCK16 to SCK17 SIN0, SIN1, SIN2_1, SIN3_1, SIN4, SIN8 to SIN12, SIN16 to SIN17		40	-	ns	
SCK ↑→ Valid SIN hold time	t_{SHIXI}			0	-	ns	
Serial clock cycle time	t_{SCYC}	SCK2_0, SCK3_0	Master Mode (CL = 20pF, I_{OL} = -10mA, I_{OH} = 10mA)	$2t_{CLK_LCPnA}$*1	-	ns	-
SCK ↓ → SOT delay time	t_{SLOVI}	SCK2_0, SCK3_0, SOT2_0, SOT3_0		-7.5	+7.5	ns	
Valid SIN → SCK ↑ setup time	t_{IVSHI}	SCK2_0, SCK3_0, SIN2_0, SIN3_0		10	-	ns	
SCK ↑→ Valid SIN hold time	t_{SHIXI}			0	-	ns	

Parameter	Symbol	Pin Name	Conditions	Value		Unit	Remarks
				Min	Max		
Serial clock "H" pulse width	t_{SHSL}	SCK0 to SCK4, SCK8 to SCK12	Slave Mode (CL = 20pF, I_{OL} = -5mA, I_{OH} = 5mA)	$4t_{CLK_LCPnA}$*1	-	ns	-
		SCK16 to SCK17		$4t_{CLK_COMP}$	-	ns	
Serial clock "L" pulse width	t_{SLSH}	SCK0 to SCK4, SCK8 to SCK12		$4t_{CLK_LCPnA}$*1	-	ns	
		SCK16 to SCK17		$4t_{CLK_COMP}$	-	ns	
SCK ↓→ SOT delay time	t_{SLOVE}	SCK0 to SCK4, SCK8 to SCK12, SCK16 to SCK17 SOT0 to SOT4, SOT8 to SOT12, SOT16 to SOT17		-	40	ns	
Valid SIN → SCK ↑ setup time	t_{IVSHE}	SCK0 to SCK4, SCK8 to SCK12, SCK16 to SCK17 SIN0 to SIN4, SIN8 to SIN12, SIN16 to SIN17		10	-	ns	
SCK ↑ → Valid SIN hold time	t_{SHIXE}			10	-	ns	
SCK falling time	t_F	SCK0 to SCK4, SCK8 to SCK12, SCK16 to SCK17		-	5	ns	
SCK rising time	t_R	SCK0 to SCK4, SCK8 to SCK12, SCK16 to SCK17		-	5	ns	

*1: n = 0:ch.0 to ch.4, n = 1:ch.8 to ch.12

Notes:

- *This table provides the alternate current standard for CLK synchronous mode.*
- *CL is the load capability value connected to the pin at the test time.*
- *The maximum baud rate is limited by the internal operating clock used and other parameters. For details, see the TRAVEO™ T1G Platform Hardware Manual.*

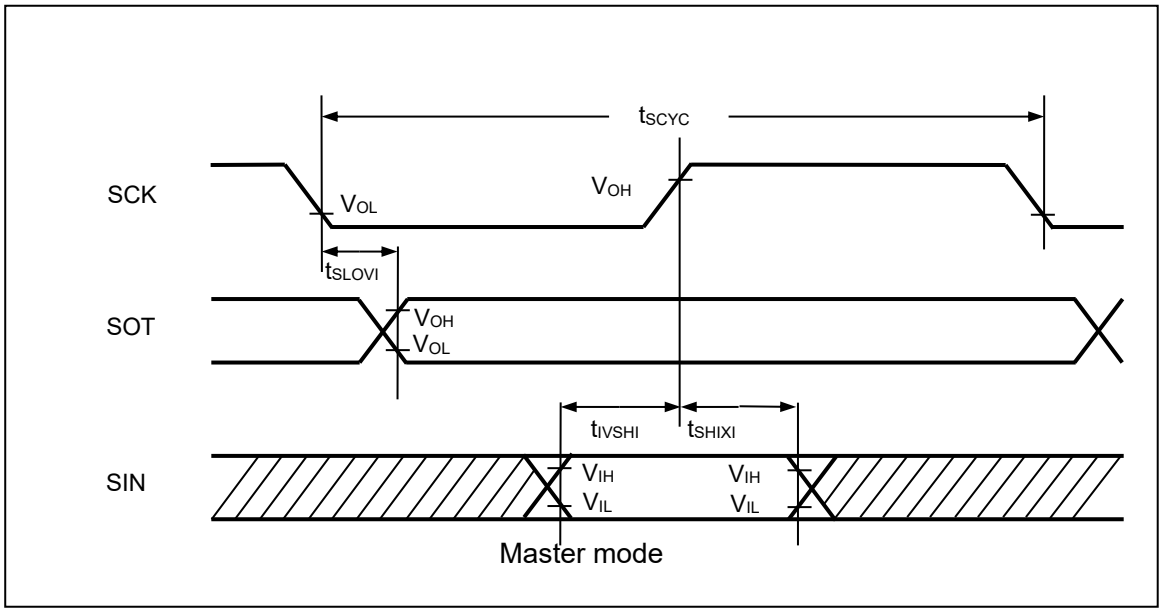
tSCYC
SCK
VOL
VOH
tSLOVI
SOT
VOH
VOL
tIVSHI
tSHIXI
SIN
VIH
VIL
VIH
VIL
Master mode

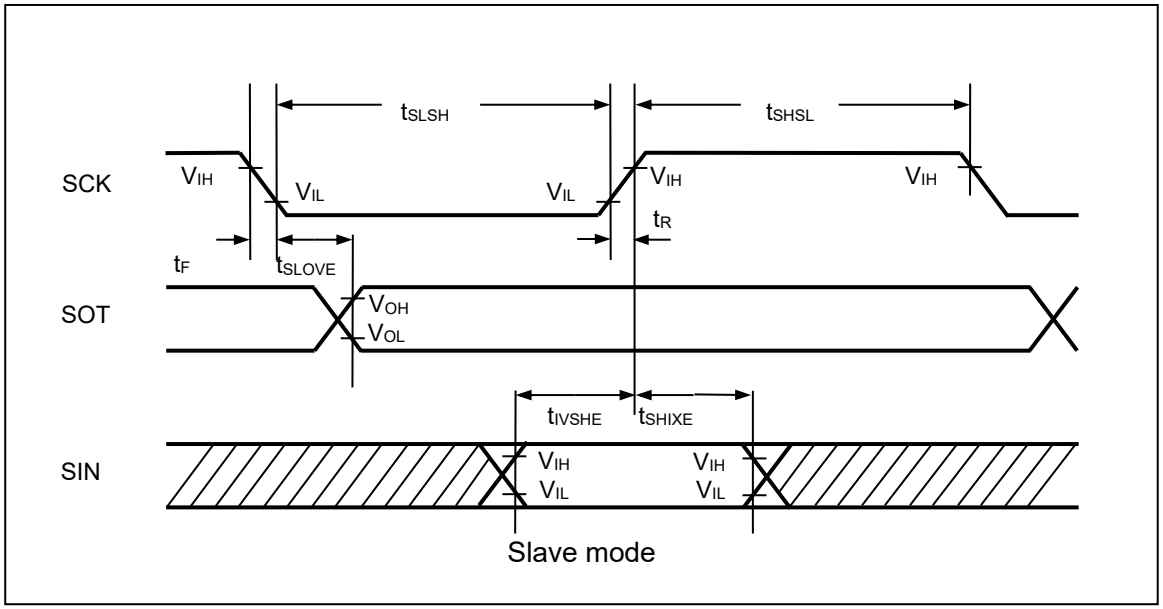
tSLSH
tSHSL
SCK
VIH
VIL
VIL
VIH
VIH
tR
tF
tSLOVE
SOT
VOH
VOL
tIVSHE
tSHIXE
SIN
VIH
VIL
VIH
VIL
Slave mode

(2) Normal Synchronous Transfer (SCR: SPI = 0) and Mark Level "L" of Serial Clock Output (SMR: SCINV = 1)

(T_A: Recommended operating conditions, Vcc3 = 3.3 V ± 0.3 V, Vcc5 = DVcc = 5.0 V ±10% / 3.3 V ± 0.3 V, Vcc53 = 5.0 V ± 10 % / 3.3 V ± 0.3 V, V_{SS} = DV_{SS} = 0.0 V, $V_{CC}12$ = 1.15 V ± 0.06 V)

Parameter	Symbol	Pin Name	Conditions	Value		Unit	Remarks
				Min	Max		
Serial clock cycle time	t_{SCYC}	SCK0, SCK1, SCK2_1, SCK3_1, SCK4, SCK8 to SCK12	Master Mode (CL = 20pF, I_{OL} = -5mA, I_{OH} = 5mA)	$8t_{CLK_LCPnA}$*1	-	ns	-
		SCK16 to SCK17		$8t_{CLK_COMP}$	-	ns	
SCK ↑ → SOT delay time	t_{SHOVI}	SCK0, SCK1, SCK2_1, SCK3_1, SCK4, SCK8 to SCK12, SCK16 to SCK17 SOT0, SOT1, SOT2_1, SOT3_1, SOT4, SOT8 to SOT12, SOT16 to SOT17		-30	+30	ns	
Valid SIN → SCK ↓ setup time	t_{IVSLI}	SCK0, SCK1, SCK2_1, SCK3_1, SCK4, SCK8 to SCK12, SCK16 to SCK17 SIN0, SIN1, SIN2_1, SIN3_1, SIN4, SIN8 to SIN12, SIN16 to SIN17		40	-	ns	
SCK ↓ → Valid SIN hold time	t_{SLIXI}			0	-	ns	

Parameter	Symbol	Pin Name	Conditions	Value		Unit	Remarks
				Min	Max		
Serial clock cycle time	t_{SCYC}	SCK2_0, SCK3_0	Master Mode (CL = 20pF, I_{OL} = -10mA, I_{OH} = 10mA)	$2t_{CLK_LCPnA}$*1	-	ns	-
SCK ↓ → SOT delay time	t_{SHOVI}	SCK2_0, SCK3_0, SOT2_0, SOT3_0		-7.5	+7.5	ns	
Valid SIN → SCK ↑ setup time	t_{IVSLI}	SCK2_0, SCK3_0, SIN2_0, SIN3_0		10	-	ns	
SCK ↑→ Valid SIN hold time	t_{SLIXI}			0	-	ns	
Serial clock "H" pulse width	t_{SHSL}	SCK0 to SCK4, SCK8 to SCK12	Slave Mode (CL = 20pF, I_{OL} = -5mA, I_{OH} = 5mA)	$4t_{CLK_LCPnA}$*1	-	ns	
		SCK16 to SCK17		$4t_{CLK_COMP}$	-	ns	
Serial clock "L" pulse width	t_{SLSH}	SCK0 to SCK4, SCK8 to SCK12		$4t_{CLK_LCPnA}$*1	-	ns	
		SCK16 to SCK17		$4t_{CLK_COMP}$	-	ns	
SCK ↑ → SOT delay time	t_{SHOVE}	SCK0 to SCK4, SCK8 to SCK12, SCK16 to SCK17 SOT0 to SOT4, SOT8 to SOT12, SOT16 to SOT17		-	40	ns	
Valid SIN → SCK ↓ setup time	t_{IVSLE}	SCK0 to SCK4, SCK8 to SCK12, SCK16 to SCK17 SIN0 to SIN4, SIN8 to SIN12, SIN16 to SIN17		10	-	ns	
SCK ↓ → Valid SIN hold time	t_{SLIXE}			10	-	ns	
SCK falling time	t_F	SCK0 to SCK4, SCK8 to SCK12, SCK16 to SCK17		-	5	ns	
SCK rising time	t_R	SCK0 to SCK4, SCK8 to SCK12, SCK16 to SCK17		-	5	ns	

*1: n = 0:ch.0 to ch.4, n = 1:ch.8 to ch.12

Notes:

- *This table provides the alternate current standard for CLK synchronous mode.*
- *CL is the load capability value connected to the pin at the test time.*
- *The maximum baud rate is limited by the internal operating clock used and other parameters. For details, see the TRAVEO™ T1G Platform Hardware Manual.*

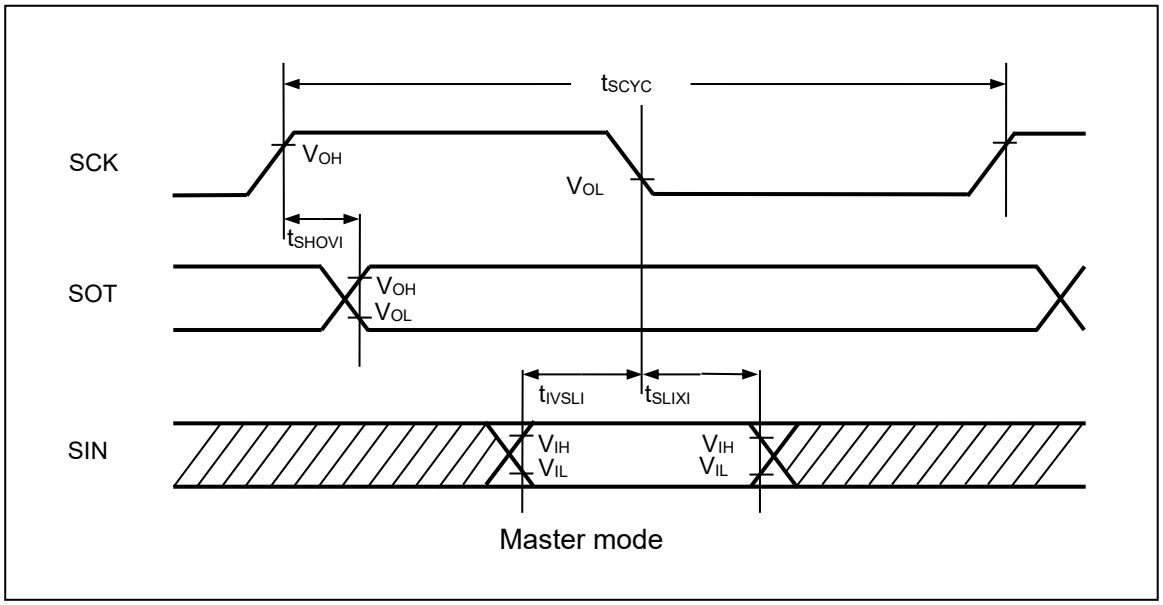

Master mode

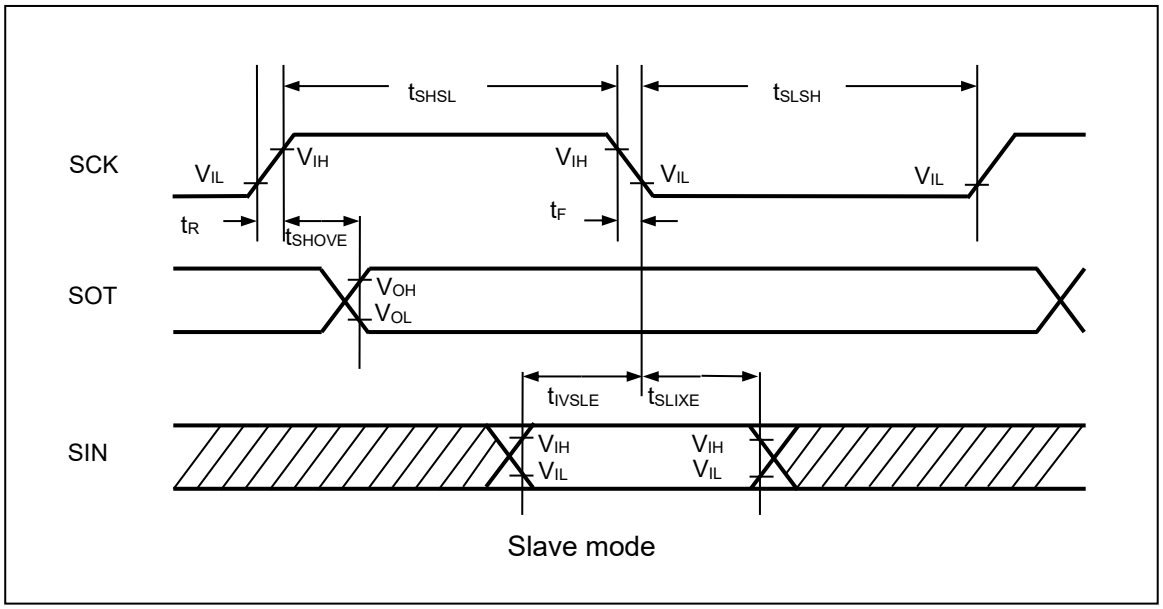

Slave mode

(3) SPI Supported (SCR: SPI = 1), and Mark Level "H" of Serial Clock Output (SMR: SCINV = 0)

(T_A: Recommended operating conditions, Vcc3 = 3.3 V ± 0.3 V, Vcc5 = DVcc = 5.0 V ± 10% / 3.3 V ± 0.3 V, Vcc53 = 5.0 V ± 10% / 3.3 V ± 0.3 V, V_{SS} = DV_{SS} = 0.0 V, $V_{CC}12$ = 1.15 V ± 0.06 V)

Parameter	Symbol	Pin Name	Conditions	Value		Unit	Remarks
				Min	Max		
Serial clock cycle time	t_{SCYC}	SCK0, SCK1, SCK2_1, SCK3_1, SCK4, SCK8 to SCK12	Master Mode (CL = 20pF, I_{OL} = -5mA, I_{OH} = 5mA)	$8t_{CLK_LCPnA}$*1	-	ns	-
		SCK16 to SCK17		$8t_{CLK_COMP}$	-	ns	
SCK ↑ → SOT delay time	t_{SHOVI}	SCK0, SCK1, SCK2_1, SCK3_1, SCK4, SCK8 to SCK12, SCK16 to SCK17 SOT0, SOT1, SOT2_1, SOT3_1, SOT4, SOT8 to SOT12, SOT16 to SOT17		-30	+30	ns	
Valid SIN → SCK ↓ setup time	t_{IVSLI}	SCK0, SCK1, SCK2_1, SCK3_1, SCK4, SCK8 to SCK12, SCK16 to SCK17 SIN0, SIN1, SIN2_1, SIN3_1, SIN4, SIN8 to SIN12, SIN16 to SIN17		40	-	ns	
SCK ↓ → Valid SIN hold time	t_{SLIXI}			0	-	ns	
SOT → SCK ↓ delay time	t_{SOVLI}	SCK0, SCK1, SCK2_1, SCK3_1, SCK4, SCK8 to SCK12, SCK16 to SCK17 SOT0, SOT1, SOT2_1, SOT3_1, SOT4, SOT8 to SOT12, SOT16 to SOT17		$4t_{CLK_LCPnA}$*1 - 30	-	ns	
		SCK16 to SCK17 SOT16 to SOT17		$4t_{CLK_COMP}$*1 - 30	-	ns	-
Serial clock cycle time	t_{SCYC}	SCK2_0, SCK3_0	Master Mode (CL = 20pF, I_{OL} = -10mA, I_{OH} = 10mA)	$2t_{CLK_LCPnA}$*1	-	ns	-
SCK ↑ → SOT delay time	t_{SHOVI}	SCK2_0, SCK3_0, SOT2_0, SOT3_0		-7.5	+7.5	ns	
Valid SIN → SCK ↑ setup time	t_{IVSHI}	SCK2_0, SCK3_0, SIN2_0, SIN3_0		10	-	ns	
SCK ↑→ Valid SIN hold time	t_{SHIXI}			0	-	ns	
SOT → SCK ↓ delay time	t_{SOVLI}	SCK2_0, SCK3_0, SOT2_0, SOT3_0		t_{CLK_LCPnA}*1 - 7.5	-	ns	

Parameter	Symbol	Pin Name	Conditions	Value		Unit	Remarks
				Min	Max		
Serial clock "H" pulse width	t_{SHSL}	SCK0 to SCK4, SCK8 to SCK12	Slave Mode (CL = 20pF, I_{OL} = -5mA, I_{OH} = 5mA)	$4t_{CLK_LCPnA}$*1	-	ns	
		SCK16 to SCK17		$4t_{CLK_COMP}$	-	ns	
Serial clock "L" pulse width	t_{SLSH}	SCK0 to SCK4, SCK8 to SCK12		$4t_{CLK_LCPnA}$*1	-	ns	
		SCK16 to SCK17		$4t_{CLK_COMP}$	-	ns	
SCK ↑ → SOT delay time	t_{SHOVE}	SCK0 to SCK4, SCK8 to SCK12, SCK16 to SCK17 SOT0 to SOT4, SOT8 to SOT12, SOT16 to SOT17		-	40	ns	
Valid SIN → SCK ↓ setup time	t_{IVSLE}	SCK0 to SCK4, SCK8 to SCK12, SCK16 to SCK17 SIN0 to SIN4, SIN8 to SIN12, SIN16 to SIN17		10	-	ns	
SCK ↓ → Valid SIN hold time	t_{SLIXE}			10	-	ns	
SCK falling time	t_F	SCK0 to SCK4, SCK8 to SCK12 SCK16 to SCK17		-	5	ns	
SCK rising time	t_R	SCK0 to SCK4, SCK8 to SCK12 SCK16 to SCK17		-	5	ns	

*1: n = 0:ch.0 to ch.4, n = 1:ch.8 to ch.12

Notes:

- *This table provides the alternate current standard for CLK synchronous mode.*
- *CL is the load capability value connected to the pin at the test time.*
- *The maximum baud rate is limited by the internal operating clock used and other parameters. For details, see TRAVEO™ T1G Platform Hardware Manual.*

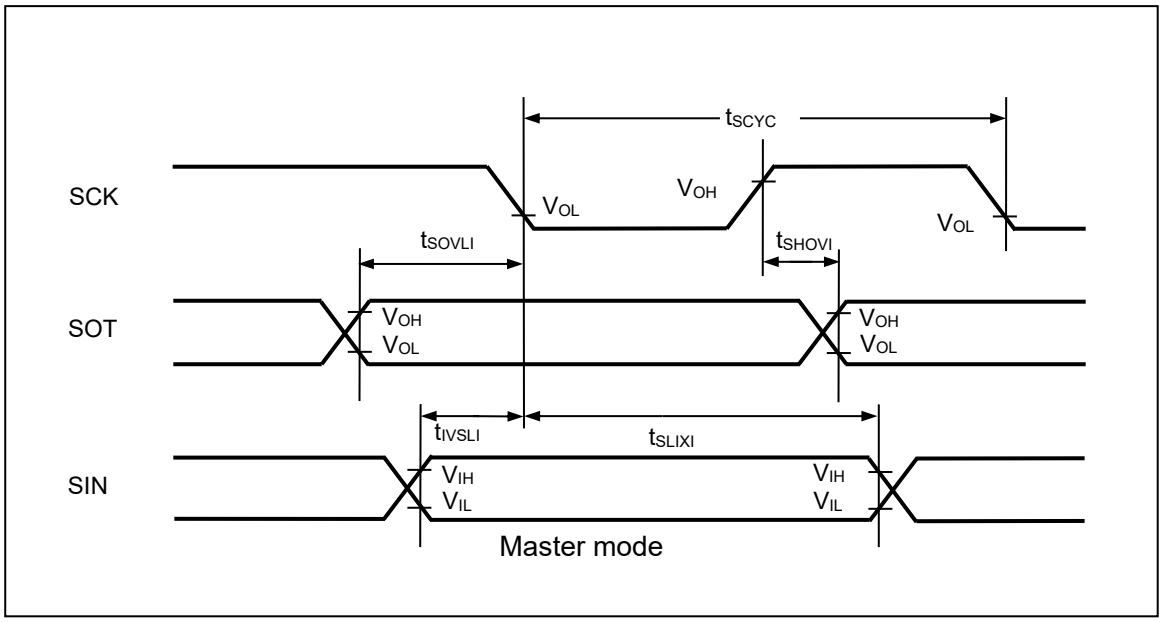

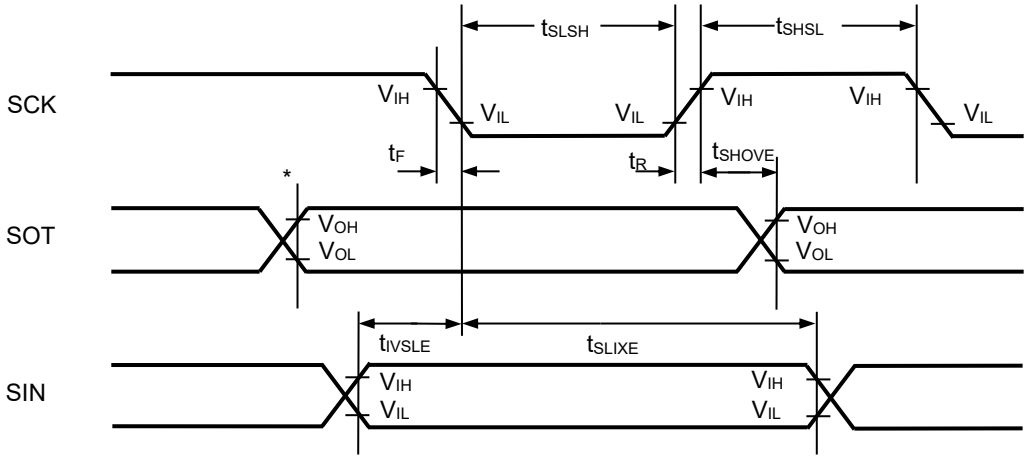

* Changes when writing to the TDR register

Slave mode

(4) SPI Supported (SCR: SPI = 1), and Mark Level "L" of Serial Clock Output (SMR: SCINV = 1)

(T_A: Recommended operating conditions, Vcc3 = 3.3 V ± 0.3 V, Vcc5 = DVcc = 5.0 V ± 10 % / 3.3 V ± 0.3 V, Vcc53 = 5.0 V ± 10 % / 3.3 V ± 0.3V, V_{SS} = DV_{SS} = 0.0 V, $V_{CC}12$ = 1.15 V ± 0.06 V)

Parameter	Symbol	Pin Name	Conditions	Value		Unit	Remarks
				Min	Max		
Serial clock cycle time	t_{SCYC}	SCK0, SCK1, SCK2_1, SCK3_1, SCK4, SCK8 to SCK12	Master Mode (CL = 20pF, I_{OL} = -5mA, I_{OH} = 5mA)	$8t_{CLK_LCPnA}$*1	-	ns	-
		SCK16 to SCK17		$8t_{CLK_COMP}$	-	ns	
SCK ↓ -> SOT delay time	t_{SLOVI}	SCK0, SCK1, SCK2_1, SCK3_1, SCK4, SCK8 to SCK12, SCK16 to SCK17 SOT0, SOT1, SOT2_1, SOT3_1, SOT4, SOT8 to SOT12, SOT16 to SOT17		-30	+30	ns	
Valid SIN -> SCK ↑ setup time	t_{IVSHI}	SCK0, SCK1, SCK2_1, SCK3_1, SCK4, SCK8 to SCK12, SCK16 to SCK17 SIN0, SIN1, SIN2_1, SIN3_1, SIN4, SIN8 to SIN12, SIN16 to SIN17		40	-	ns	
SCK ↑ -> Valid SIN hold time	t_{SHIXI}			0	-	ns	
SOT -> SCK ↑ delay time	t_{SOVHI}	SCK0, SCK1, SCK2_1, SCK3_1, SCK4, SCK8 to SCK12, SCK16 to SCK17 SOT0, SOT1, SOT2_1, SOT3_1, SOT4, SOT8 to SOT12, SOT16 to SOT17		$4t_{CLK_LCPnA}$*1 - 30	-	ns	
		SCK16 to SCK17 SOT16 to SOT17		$4t_{CLK_COMP}$ -30	-	ns	
Serial clock cycle time	t_{SCYC}	SCK2_0, SCK3_0	Master Mode (CL = 20pF, I_{OL} = -10mA, I_{OH} = 10mA)	$2t_{CLK_LCPnA}$*1	-	ns	-
SCK ↓ -> SOT delay time	t_{SLOVI}	SCK2_0, SCK3_0, SOT2_0, SOT3_0		-7.5	+7.5	ns	
Valid SIN -> SCK ↑ setup time	t_{IVSHI}	SCK2_0, SCK3_0, SIN2_0, SIN3_0		10	-	ns	
SCK ↑ -> Valid SIN hold time	t_{SHIXI}			0	-	ns	
SOT -> SCK ↑ delay time	t_{SOVHI}	SCK2_0, SCK3_0, SOT2_0, SOT3_0		t_{CLK_LCPnA}*1 - 7.5	-	ns	

Parameter	Symbol	Pin Name	Conditions	Value		Unit	Remarks
				Min	Max		
Serial clock "H" pulse width	t_{SHSL}	SCK0 to SCK4, SCK8 to SCK12	Slave Mode (CL = 20pF, I_{OL} = -5mA, I_{OH} = 5mA)	$4t_{CLK_LCPnA}$*1	-	ns	-
		SCK16 to SCK17		$4t_{CLK_COMP}$	-	ns	
Serial clock "L" pulse width	t_{SLSH}	SCK0 to SCK4, SCK8 to SCK12		$4t_{CLK_LCPnA}$*1	-	ns	
		SCK16 to SCK17		$4t_{CLK_COMP}$	-	ns	
SCK ↓ -> SOT delay time	t_{SLOVE}	SCK0 to SCK4, SCK8 to SCK12, SCK16 to SCK17 SOT0 to SOT4, SOT8 to SOT12, SOT16 to SOT17		-	40	ns	
Valid SIN -> SCK ↑ setup time	t_{IVSHE}	SCK0 to SCK4, SCK8 to SCK12, SCK16 to SCK17 SIN0 to SIN4, SIN8 to SIN12, SIN16 to SIN17		10	-	ns	
SCK ↑ -> Valid SIN hold time	t_{SHIXE}			10	-	ns	
SCK falling time	t_F	SCK0 to SCK4, SCK8 to SCK12 SCK16 to SCK17		-	5	ns	
SCK rising time	t_R	SCK0 to SCK4, SCK8 to SCK12 SCK16 to SCK17		-	5	ns	

*1: n = 0:ch.0 to ch.4, n = 1:ch.8 to ch.12

Notes:

- *This table provides the alternate current standard for CLK synchronous mode.*
- *CL is the load capability value connected to the pin at the test time.*
- *The maximum baud rate is limited by the internal operating clock used and other parameters. For details, see the TRAVEO™ T1G Platform Hardware Manual.*

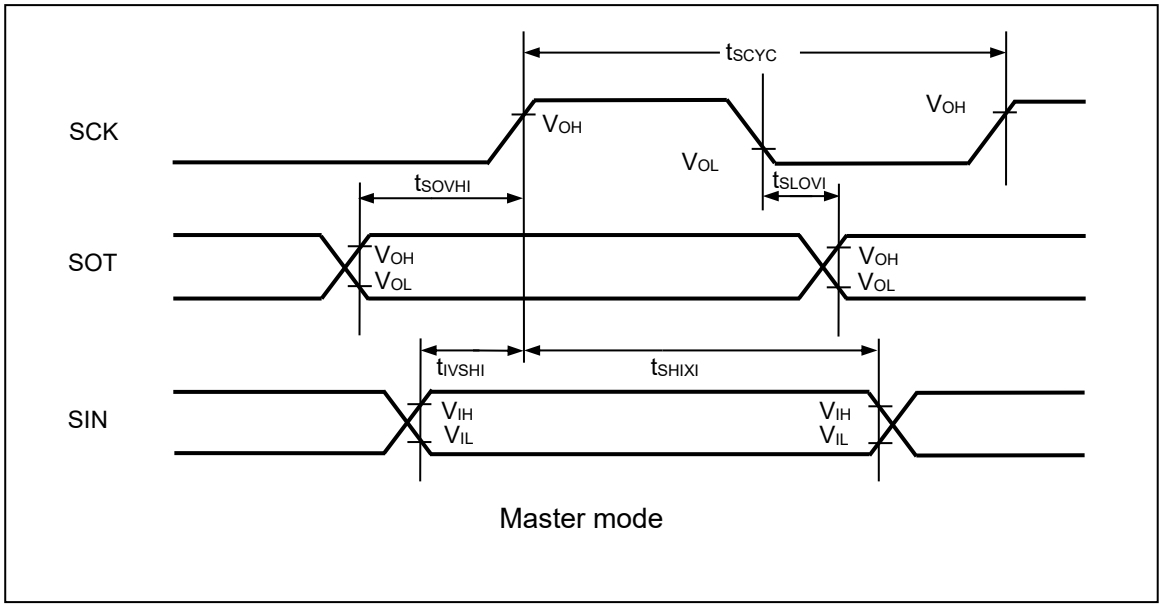

Master mode

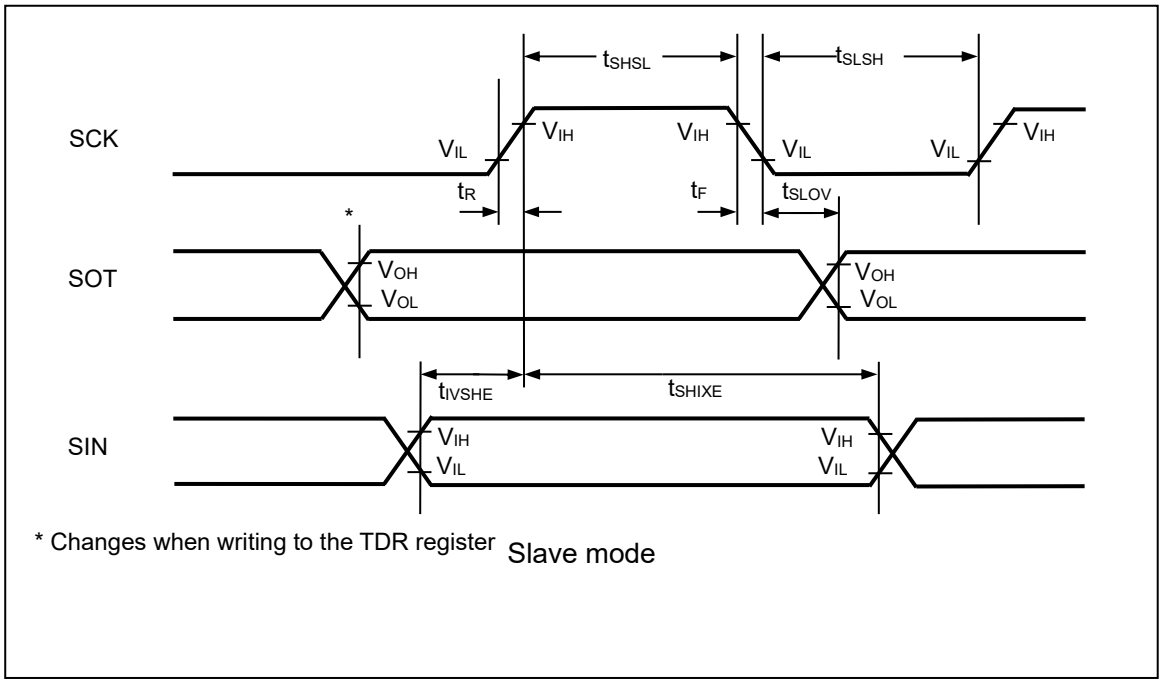

* Changes when writing to the TDR register

Slave mode

(5) Serial Chip Select Used (SCSCR: CSEN = 1)

■ Mark level "H" of serial clock output (SMR, SCSFR: SCINV = 0)

■ Inactive level "H" of serial chip select (SCSCR, SCSFR: CSLVL = 1)

(T_A: Recommended operating conditions, Vcc3 = 3.3 V ± 0.3 V, Vcc5 = DVcc = 5.0 V ± 10 % / 3.3 V ± 0.3 V, Vcc53 = 5.0 V ± 10% / 3.3 V ± 0.3 V, V_{SS} = DV_{SS} = 0.0 V, $V_{CC}12$ = 1.15 V ± 0.06 V)

Parameter	Symbol	Pin Name	Conditions	Value		Unit	Remarks
				Min	Max		
SCS ↑ → SCK ↓ setup time	t_{CSSI}	SCK0, SCK1, SCK2_1, SCK3_1, SCK4, SCK8 to SCK12, SCK16 to SCK17 SCS0x, SCS1x, SCS2x_1, SCS3x_1, SCS4, SCS8x to SCS12x, SCS16x to SCS17x	Master Mode (CL = 20pF, I_{OL} = -5mA, I_{OH} = 5mA)	t_{CSSU}[*1]-15	-	ns	
SCK ↑ → SCS ↑ hold time	t_{CSHI}			t_{CSHD}[*2]+0	-	ns	
SCS deselect time	t_{CSDI}	SCS0x, SCS1x, SCS2x_1, SCS3x_1, SCS4, SCS8x to SCS12x		t_{CSDS}[*3]-15 +5t_{CLK_LCPnA}[*4]	-	ns	
		SCS16x to SCS17x		t_{CSDS}[*3]-15 +5t_{CLK_COMP}	-	ns	
SCS ↑ → SCK ↓ setup time	t_{CSSI}	SCK2_0, SCK3_0, SCS2x_0, SCS3x_0	Master Mode (CL = 20pF, I_{OL} = -10mA, I_{OH} = 10mA)	t_{CSSU}[*1]-10	-	ns	
SCK ↑ → SCS ↑ hold time	t_{CSHI}			t_{CSHD}[*2]+0	-	ns	
SCS deselect time	t_{CSDI}	SCS2x_0, SCS3x_0		t_{CSDS}[*3]-10 +5t_{CLK_LCPnA}[*4]	-	ns	
SCS ↓ → SCK ↓ setup time	t_{CSSE}	SCK0 to SCK4, SCK8 to SCK12 SCS0x to SCS4x, SCS8x to SCS12x	Slave Mode (CL = 20pF, I_{OL} = -5mA, I_{OH} = 5mA)	4t_{CLK_LCPnA}[*4] +15	-	ns	
		SCK16 to SCK17, SCS16x to SCS17x		4t_{CLK_COMP} +15	-	ns	
SCK ↑ → SCS ↑ hold time	t_{CSHE}	SCK0 to SCK4, SCK8 to SCK12, SCK16 to SCK17, SCS0x to SCS4x, SCS8x to SCS12x, SCS16x to SCS17x		0	-	ns	
SCS deselect time	t_{CSDE}	SCS0x to SCS4x, SCS8x to SCS12x		4t_{CLK_LCPnA}[*4] +15	-	ns	
		SCS16x to SCS17x		4t_{CLK_COMP} +15	-	ns	
SCS ↓ → SOT delay time	t_{DSE}	SCS0x to SCS4x, SCS8x to SCS12x, SCS16x to SCS17x, SOT0 to SOT4, SOT8 to SOT12, SOT16 to SOT17		-	40	ns	
SCS ↑ → SOT delay time	t_{DEE}			0	-	ns	

Parameter	Symbol	Pin Name	Conditions	Value		Unit	Remarks
				Min	Max		
SCK ↓ → SCS ↓ clock switching time	t_{SCC}	SCK0, SCK1, SCK2_1, SCK3_1, SCK4, SCK8 to SCK12, SCS0x, SCS1x, SCS2x_1, SCS3x_1, SCS4, SCS8x to SCS12x	Master mode round operation (CL = 20pF, I_{OL} = -5mA, I_{OH} = 5mA)	$4t_{CLK_LCPnA}$*4 +0	$4t_{CLK_LCPnA}$*4 +15	ns	
		SCK16 to SCK17 SCS16x to SCS17x		$4t_{CLK_COMP}$ +0	$4t_{CLK_COMP}$ +15	ns	
		SCK2_0, SCK3_0, SCS2x_0, SCS3x_0	Master mode round operation (CL = 20pF, I_{OL} = -10mA, I_{OH} = 10mA)	$4t_{CLK_LCPnA}$*4 +0	$4t_{CLK_LCPnA}$*4 +10	ns	

*1: t_{CSSU} = SCSTR: CSSU[7:0] x serial chip select timing operating clock

*2: t_{CSHD} = SCSTR: CSHD[7:0] x serial chip select timing operating clock

*3: t_{CSDS} = SCSTR: CSDS[15:0] x serial chip select timing operating clock

For details on *1, *2, and *3 above, see the TRAVEO™ T1G Platform Hardware Manual.

*4 t_{CLK_LCPnA} n = 0:ch.0 to ch.4, n = 1:ch.8 to ch.12

Notes:

- *This is the AC characteristic in CLK synchronized mode.*
- *CL is the load capacitance applied to pins during testing.*
- *The maximum baud rate is limited by the internal operating clock used and other parameters. For details, see the TRAVEO™ T1G Platform Hardware Manual.*

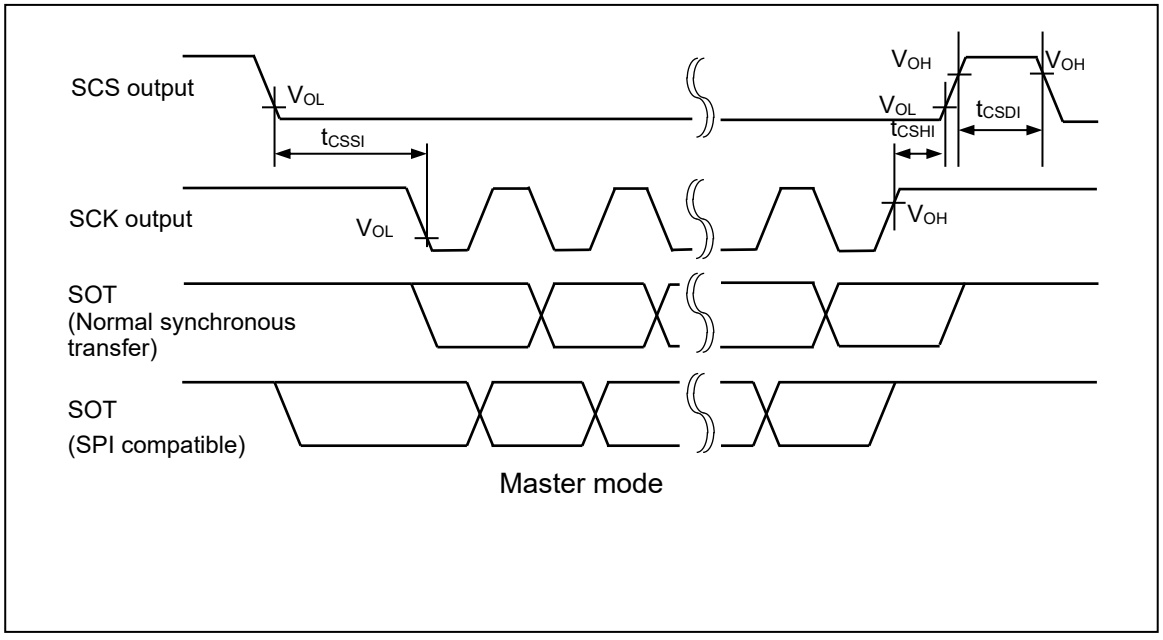

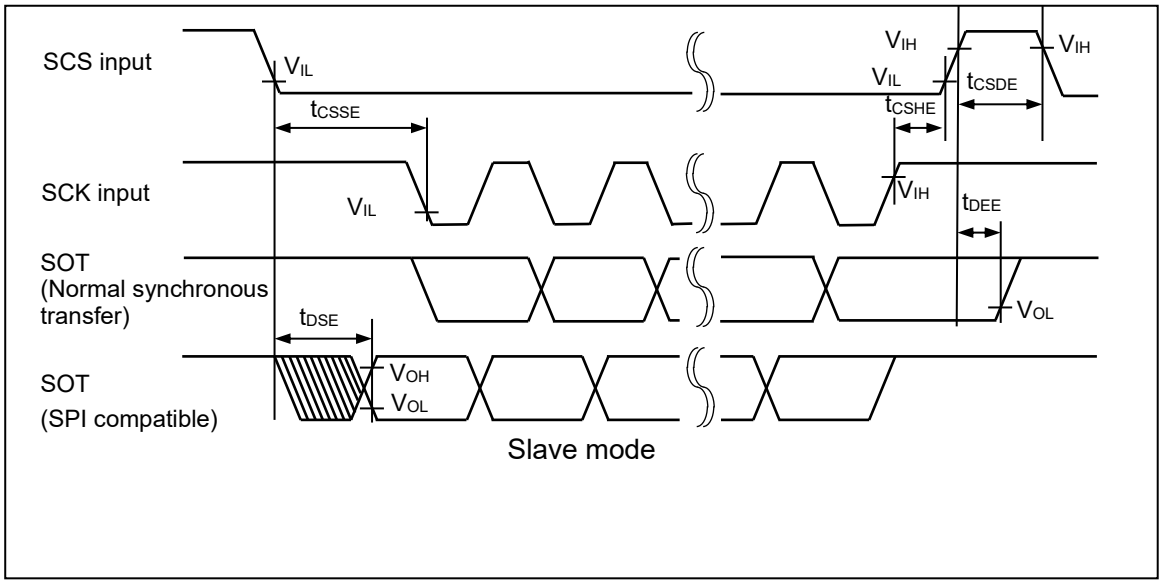

Slave mode

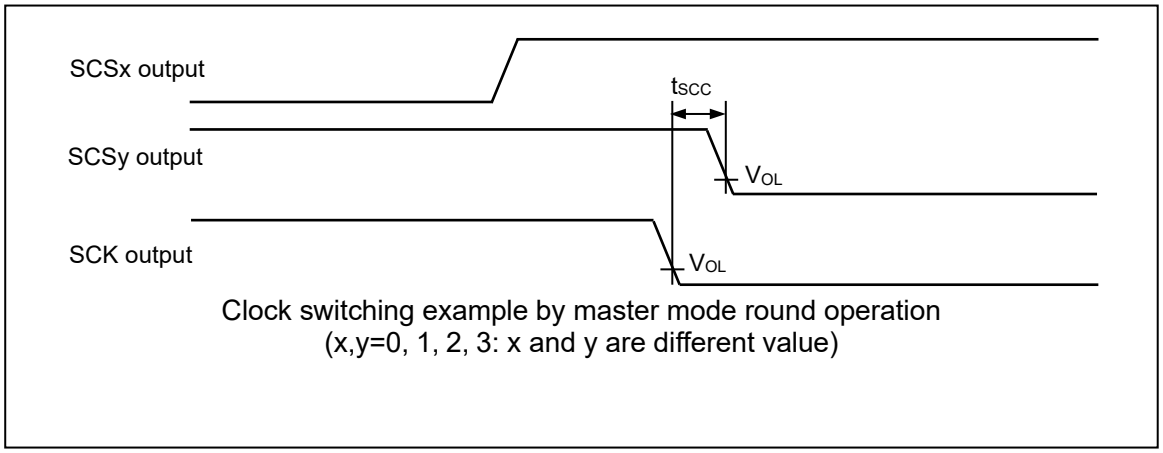

Clock switching example by master mode round operation
(x,y=0, 1, 2, 3: x and y are different value)

(6) Serial Chip Select Used (SCSCR: CSEN = 1)

■ Serial clock output signal detect level "L" (SMR, SCSFR: SCINV = 1)

■ Serial chip select inactive level "H" (SCSCR, SCSFR: CSLVL = 1)

(T_A: Recommended operating conditions, Vcc3 = 3.3 V ±0.3 V, Vcc5 = DVcc = 5.0 V ± 10% / 3.3 V ± 0.3 V, Vcc53 = 5.0 V ± 10 % / 3.3 V ± 0.3 V, V_{SS} = DV_{SS} = 0.0 V, $V_{CC}12$ = 1.15V ± 0.06 V)

Parameter	Symbol	Pin Name	Conditions	Value		Unit	Remarks
				Min	Max		
SCS ↓→ SCK ↑ setup time	t_{CSSI}	SCK0, SCK1, SCK2_1, SCK3_1, SCK4, SCK8 to SCK12, SCK16 to SCK17 SCS0x, SCS1x, SCS2x_1, SCS3x_1, SCS4, SCS8x to SCS12x, SCS16x to SCS17x	Master mode (CL = 20pF, I_{OL} = -5mA, I_{OH} = 5mA)	t_{CSSU}*1-15	-	ns	
SCK ↓→ SCS ↑ hold time	t_{CSHI}			t_{CSHD}*2+0	-	ns	
SCS deselect time	t_{CSDI}	SCS0x, SCS1x, SCS2x_1, SCS3x_1, SCS4, SCS8x to SCS12x		t_{CSDS}*3-15 +5t_{CLK_LCPnA}*4	-	ns	
		SCS16x to SCS17x		t_{CSDS}*3-15 +5t_{CLK_COMP}	-	ns	
SCS ↓→ SCK ↑ setup time	t_{CSSI}	SCK2_0, SCK3_0, SCS2x_0, SCS3x_0	Master Mode (CL = 20pF, I_{OL} = -10mA, I_{OH} = 10mA)	t_{CSSU}*1-10	-	ns	
SCK ↓→ SCS ↑ hold time	t_{CSHI}			t_{CSHD}*2+0	-	ns	
SCS deselect time	t_{CSDI}	SCS2x_0, SCS3x_0		t_{CSDS}*3-10 +5t_{CLK_LCPnA}*4	-	ns	
SCS ↓ → SCK ↑ setup time	t_{CSSE}	SCK0 to SCK4, SCK8 to SCK12, SCS0x to SCS4x, SCS8x to SCS12x	Slave mode (CL = 20pF, I_{OL} = -5mA, I_{OH} = 5mA)	4t_{CLK_LCPnA}*4 +15	-	ns	
		SCK16 to SCK17, SCS16x to SCS17x		4t_{CLK_COMP} +15	-	ns	
SCK ↓ → SCS ↑ hold time	t_{CSHE}	SCK0 to SCK4, SCK8 to SCK12, SCK16 to SCK17, SCS0x to SCS4x, SCS8x to SCS12x, SCS16x to SCS17x		0	-	ns	
SCS deselect time	t_{CSDE}	SCS0x to SCS4x, SCS8x to SCS12x		4t_{CLK_LCPnA}*4 +15	-	ns	
		SCS16x to SCS17x		4t_{CLK_COMP} +15	-	ns	
SCS ↓ → SOT delay time	t_{DSE}	SCS0x to SCS4x, SCS8x to SCS12x, SCS16x to SCS17x, SOT0 to SOT4, SOT8 to SOT12, SOT16 to SOT17		-	40	ns	
SCS ↑ → SOT delay time	t_{DEE}			0	-	ns	

Parameter	Symbol	Pin Name	Conditions	Value		Unit	Remarks
				Min	Max		
SCK ↑ → SCS ↓ clock switching time	t_{SCC}	SCK0, SCK1, SCK2_1, SCK3_1, SCK4, SCK8 to SCK12, SCS0x, SCS1x, SCS2x_1, SCS3x_1, SCS4, SCS8x to SCS12x	Master mode round operation (CL = 20pF, I_{OL} = -5mA, I_{OH} = 5mA)	$4t_{CLK_LCPnA}$*4 +0	$4t_{CLK_LCPnA}$*4 +15	ns	
		SCK16 to SCK17 SCS16x to SCS17x		$4t_{CLK_COMP}$ +0	$4t_{CLK_COMP}$ +15	ns	
		SCK2_0, SCK3_0, SCS2x_0, SCS3x_0	Master mode round operation (CL = 20pF, I_{OL} = -10mA, I_{OH} = 10mA)	$4t_{CLK_LCPnA}$*4 +0	$4t_{CLK_LCPnA}$*4 +10	ns	

*1: t_{CSSU} = SCSTR: CSSU[7:0] x serial chip select timing operating clock

*2: t_{CSHD} = SCSTR: CSHD[7:0] x serial chip select timing operating clock

*3: t_{CSDS} = SCSTR: CSDS[15:0] x serial chip select timing operating clock

For details on *1, *2, and *3 above, see the TRAVEO™ T1G Platform Hardware Manual.

*4 t_{CLK_LCPnA} n = 0:ch.0 to ch.4, n = 1:ch.8 to ch.12

Notes:

- *This is the AC characteristic in CLK synchronized mode.*
- *CL is the load capacitance applied to pins during testing.*
- *The maximum baud rate is limited by the internal operating clock used and other parameters. For details, see the TRAVEO™ T1G Platform Hardware Manual.*

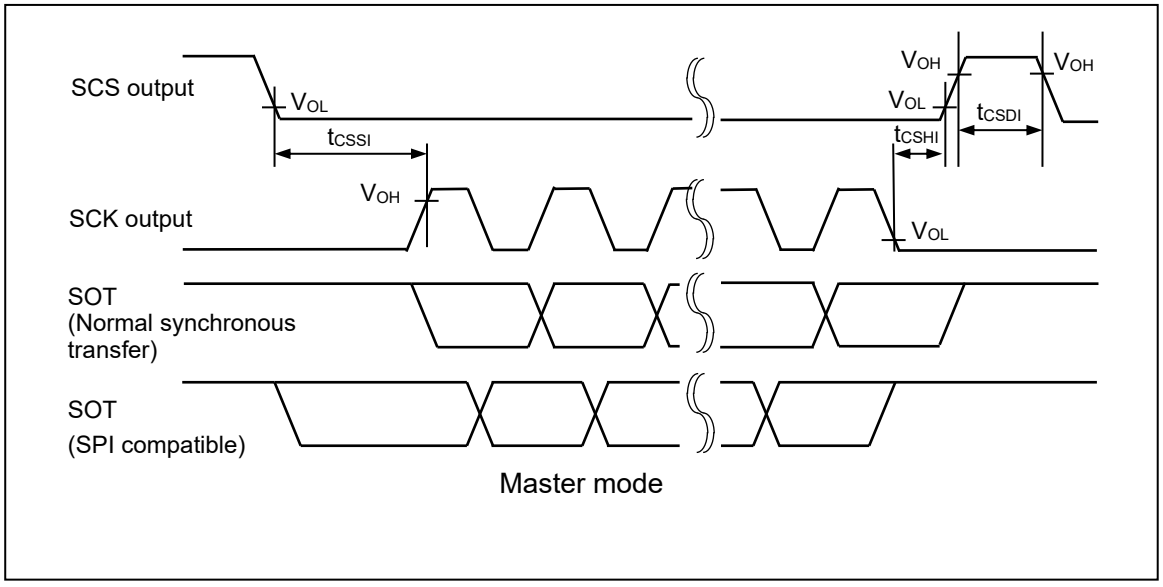

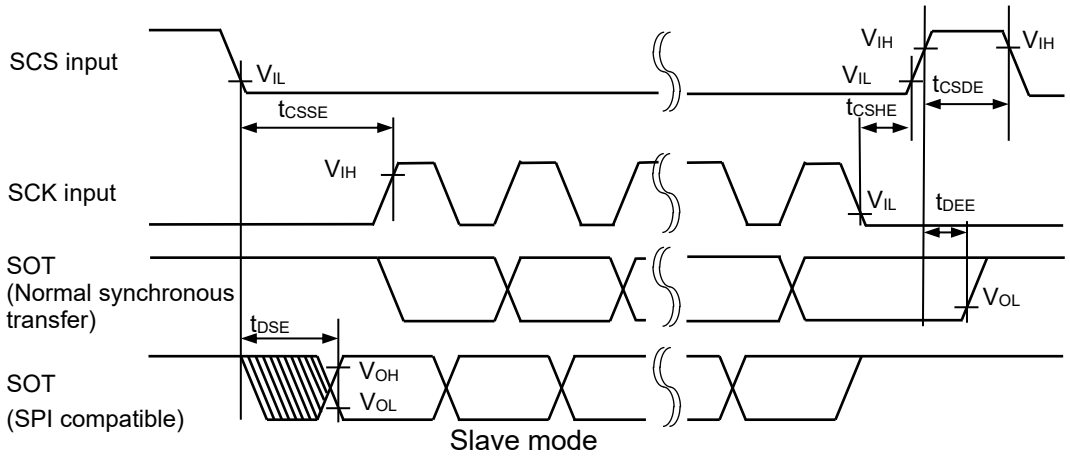

Slave mode

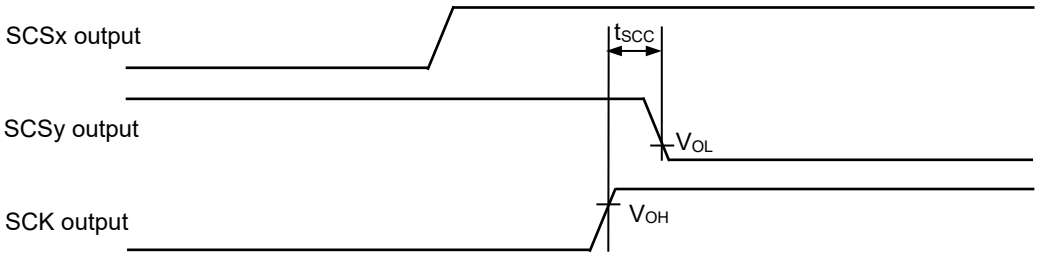

Clock switching example by master mode round operation
(x,y=0, 1, 2, 3: x and y are different value)

(7) Serial Chip Select Used (SCSCR: CSEN = 1)

■ Serial clock output signal detect level "H" (SMR, SCSFR: SCINV = 0)

■ Serial Chip select inactive level "L" (SCSCR, SCSFR: CSLVL = 0

(T_A: Recommended operating conditions, Vcc3 = 3.3 V ± 0.3 V, Vcc5 = DVcc = 5.0 V ± 10 % / 3.3 V ± 0.3 V, Vcc53 = 5.0 V ± 10 % / 3.3 V ± 0.3 V, V_{SS} = DV_{SS} = 0.0 V, $V_{CC}12$ = 1.15 V ± 0.06 V)

Parameter	Symbol	Pin Name	Conditions	Value		Unit	Remarks
				Min	Max		
SCS ↑ → SCK ↓ setup time	t_{CSSI}	SCK0, SCK1, SCK2_1, SCK3_1, SCK4, SCK8 to SCK12, SCK16 to SCK17 SCS0x, SCS1x, SCS2x_1, SCS3x_1, SCS4, SCS8x to SCS12x, SCS16x to SCS17x	Master mode (CL = 20pF, I_{OL} = -5mA, I_{OH} = 5mA)	t_{CSSU}*1-15	-	ns	
SCK ↑ → SCS ↓ hold time	t_{CSHI}			t_{CSHD}*2+0	-	ns	
SCS deselect time	t_{CSDI}	SCS0x, SCS1x, SCS2x_1, SCS3x_1, SCS4, SCS8x to SCS12x		t_{CSDS}*3-15 +5t_{CLK_LCPnA}*4	-	ns	
		SCS16x to SCS17x		t_{CSDS}*3-15 +5t_{CLK_COMP}	-	ns	
SCS ↑ → SCK ↓ setup time	t_{CSSI}	SCK2_0, SCK3_0, SCS2x_0, SCS3x_0	Master Mode (CL = 20pF, I_{OL} = -10mA, I_{OH} = 10mA)	t_{CSSU}*1-10	-	ns	
SCK ↑ → SCS ↓ hold time	t_{CSHI}			t_{CSHD}*2+0	-	ns	
SCS deselect time	t_{CSDI}	SCS2x_0, SCS3x_0		t_{CSDS}*3-10 +5t_{CLK_LCPnA}*4	-	ns	
SCS ↑ → SCK ↓ setup time	t_{CSSE}	SCK0 to SCK4, SCK8 to SCK12 SCS0x to SCS4x, SCS8x to SCS12x	Slave mode (CL = 20pF, I_{OL} = -5mA, I_{OH} = 5mA)	4t_{CLK_LCPnA}*4 +15	-	ns	
		SCK16 to SCK17, SCS16x to SCS17x		4t_{CLK_COMP} +15	-	ns	
SCK ↑ → SCS ↓ hold time	t_{CSHE}	SCK0 to SCK4, SCK8 to SCK12, SCK16 to SCK17, SCS0x to SCS4x, SCS8x to SCS12x, SCS16x to SCS17x		0	-	ns	
SCS deselect time	t_{CSDE}	SCS0x to SCS4x, SCS8x to SCS12x		4t_{CLK_LCPnA}*4 +15	-	ns	
		SCS16x to SCS17x		4t_{CLK_COMP} +15	-	ns	
SCS ↑ → SOT delay time	t_{DSE}	SCS0x to SCS4x, SCS8x to SCS12x, SCS16x to SCS17x, SOT0 to SOT4, SOT8 to SOT12, SOT16 to SOT17		-	40	ns	
SCS ↓ → SOT delay time	t_{DEE}			0	-	ns	

Parameter	Symbol	Pin Name	Conditions	Value		Unit	Remarks
				Min	Max		
SCK ↓ → SCS ↑ clock switching time	t_{SCC}	SCK0, SCK1, SCK2_1, SCK3_1, SCK4, SCK8 to SCK12 SCS0x, SCS1x, SCS2x_1, SCS3x_1, SCS4, SCS8x to SCS12x	Master mode round operation (CL = 20pF, I_{OL} = -5mA, I_{OH} = 5mA)	$4t_{CLK_LCPnA}$*4 +0	$4t_{CLK_LCPnA}$*4 +15	ns	
		SCK16 to SCK17 SCS16x to SCS17x		$4t_{CLK_COMP}$ +0	$4t_{CLK_COMP}$ +15	ns	
		SCK2_0, SCK3_0, SCS2x_0, SCS3x_0	Master mode round operation (CL = 20pF, I_{OL} = -10mA, I_{OH} = 10mA)	$4t_{CLK_LCPnA}$*4 +0	$4t_{CLK_LCPnA}$*4 +10	ns	

*1: t_{CSSU} = SCSTR: CSSU[7:0] x serial chip select timing operating clock

*2: t_{CSHD} = SCSTR: CSHD[7:0] x serial chip select timing operating clock

*3: t_{CSDS} = SCSTR: CSDS[15:0] x serial chip select timing operating clock

For details on *1, *2, and *3 above, see the TRAVEO™ T1G Platform Hardware Manual.

*4 t_{CLK_LCPnA} n = 0:ch.0 to ch.4, n = 1:ch.8 to ch.12

Notes:

- *This is the AC characteristic in CLK synchronized mode.*
- *CL is the load capacitance applied to pins during testing.*
- *The maximum baud rate is limited by the internal operating clock used and other parameters. For details, see the TRAVEO™ T1G Platform Hardware Manual*

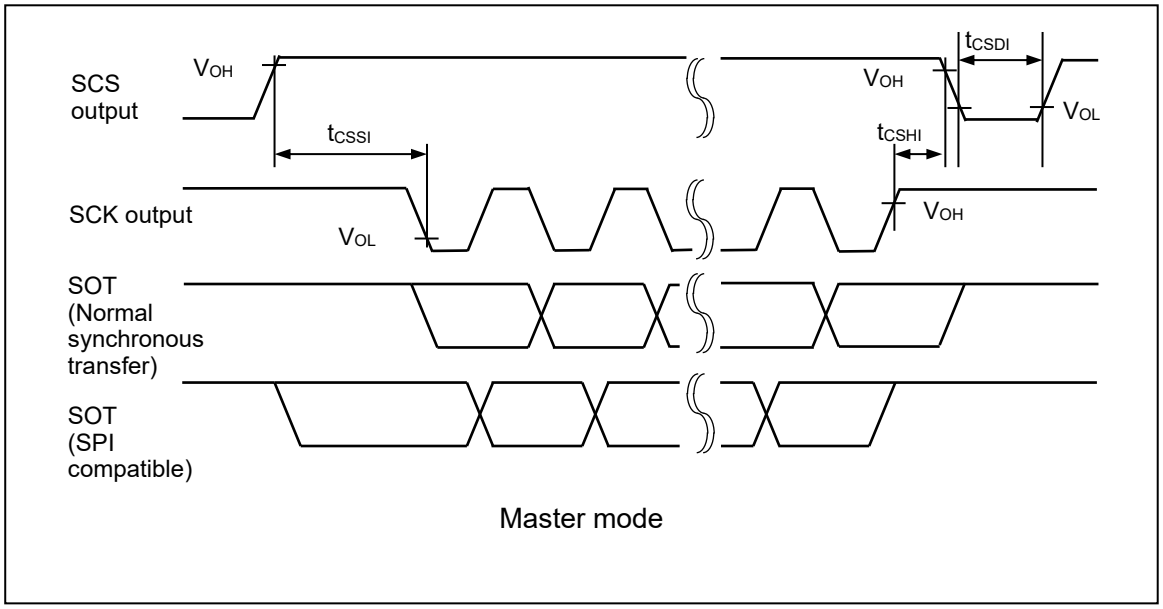

Master mode

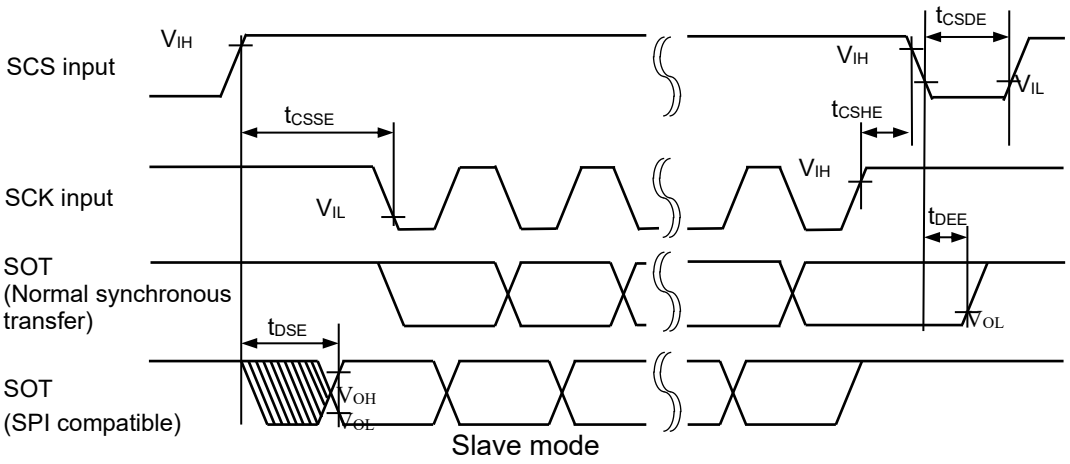

Slave mode

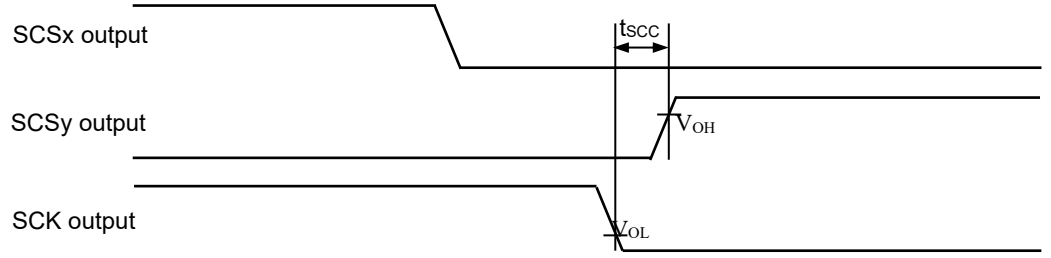

Clock switching example by master mode round operation
(x,y=0, 1, 2, 3: x and y are different value)

(8) Serial Chip Select Used (SCSCR: CSEN = 1)

■ Serial clock output signal detect level "L" (SMR, SCSFR: SCINV = 1)

■ Serial Chip select inactive level "L" (SCSCR, SCSFR: CSLVL = 0)

(T_A: Recommended operating conditions, Vcc3 = 3.3 V ±0.3 V, Vcc5 = DVcc = 5.0 V ± 10 % / 3.3V ± 0.3 V, Vcc53 = 5.0 V ± 10 % / 3.3 V ± 0.3 V, V_{SS} = DV_{SS} = 0.0 V, $V_{CC}12$ = 1.15 V ± 0.06 V)

Parameter	Symbol	Pin Name	Conditions	Value		Unit	Remarks
				Min	Max		
SCS ↑ → SCK ↑ setup time	t_{CSSI}	SCK0, SCK1, SCK2_1, SCK3_1, SCK4, SCK8 to SCK12, SCK16 to SCK17 SCS0x, SCS1x, SCS2x_1, SCS3x_1, SCS4, SCS8x to SCS12x, SCS16x to SCS17x	Master mode (CL = 20pF, I_{OL} = -5mA, I_{OH} = 5mA)	t_{CSSU}*1-15	-	ns	
SCK ↓ → SCS ↓ hold time	t_{CSHI}			t_{CSHD}*2+0	-	ns	
SCS deselect time	t_{CSDI}	SCS0x, SCS1x, SCS2x_1, SCS3x_1, SCS4, SCS8x to SCS12x		t_{CSDS}*3-15 +5t_{CLK_LCPnA}*4	-	ns	
		SCS16x to SCS17x		t_{CSDS}*3-15 +5t_{CLK_COMP}	-	ns	
SCS ↑ → SCK ↑ setup time	t_{CSSI}	SCK2_0, SCK3_0, SCS2x_0, SCS3x_0	Master Mode (CL = 20pF, I_{OL} = -10mA, I_{OH} = 10mA)	t_{CSSU}*1-10	-	ns	
SCK ↓ → SCS ↓ hold time	t_{CSHI}			t_{CSHD}*2+0	-	ns	
SCS deselect time	t_{CSDI}	SCS2x_0, SCS3x_0		t_{CSDS}*3-10 +5t_{CLK_LCPnA}*4	-	ns	
SCS ↑ → SCK ↑ setup time	t_{CSSE}	SCK0 to SCK4, SCK8 to SCK12 SCS0x to SCS4x, SCS8x to SCS12x	Slave mode (CL = 20pF, I_{OL} = -5mA, I_{OH} = 5mA)	4t_{CLK_LCPnA}*4+15	-	ns	
		SCK16 to SCK17, SCS16x to SCS17x		4t_{CLK_COMP}+15	-	ns	
SCK ↓ → SCS ↓ hold time	t_{CSHE}	SCK0 to SCK4, SCK8 to SCK12, SCK16 to SCK17, SCS0x to SCS4x, SCS8x to SCS12x, SCS16x to SCS17x		0	-	ns	
SCS deselect time	t_{CSDE}	SCS0x to SCS4x, SCS8x to SCS12x		4t_{CLK_LCPnA}*4+15	-	ns	
		SCS16x to SCS17x		4t_{CLK_COMP}+15	-	ns	
SCS ↑ → SOT delay time	t_{DSE}	SCS0x to SCS4x, SCS8x to SCS12x, SCS16x to SCS17x, SOT0 to SOT4, SOT8 to SOT12, SOT16 to SOT17		-	40	ns	
SCS ↓ → SOT delay time	t_{DEE}			0	-	ns	

Parameter	Symbol	Pin Name	Conditions	Value		Unit	Remarks
				Min	Max		
SCK ↑ → SCS ↑ clock switching time	t_{SCC}	SCK0, SCK1, SCK2_1, SCK3_1, SCK4, SCK8 to SCK12, SCS0x, SCS1x, SCS2x_1, SCS3x_1, SCS4, SCS8x to SCS12x	Master mode round operation (CL = 20pF, I_{OL} = -5mA, I_{OH} = 5mA)	$4t_{CLK_LCPnA}$*4+0	$4t_{CLK_LCPnA}$*4 +15	ns	
		SCK16 to SCK17, SCS16x to SCS17x		$4t_{CLK_COMP}$+0	$4t_{CLK_COMP}$ +15	ns	
		SCK2_0, SCK3_0, SCS2x_0, SCS3x_0	Master mode round operation (CL = 20pF, I_{OL} = -10mA, I_{OH} = 10mA)	$4t_{CLK_LCPnA}$*4 +0	$4t_{CLK_LCPnA}$*4 +10	ns	

*1: t_{CSSU} = SCSTR: CSSU[7:0] x serial chip select timing operating clock

*2: t_{CSHD} = SCSTR: CSHD[7:0] x serial chip select timing operating clock

*3: t_{CSDS} = SCSTR: CSDS[15:0] x serial chip select timing operating clock
For details on *1, *2, and *3 above, see the TRAVEO™ T1G Platform Hardware Manual.

*4 t_{CLK_LCPnA} n = 0: ch.0 to ch.4, n = 1: ch.8 to ch.12

Notes:

- *This is the AC characteristic in CLK synchronized mode.*
- *CL is the load capacitance applied to pins during testing.*
- *The maximum baud rate is limited by the internal operating clock used and other parameters. For details, see the TRAVEO™ T1G Platform Hardware Manual.*

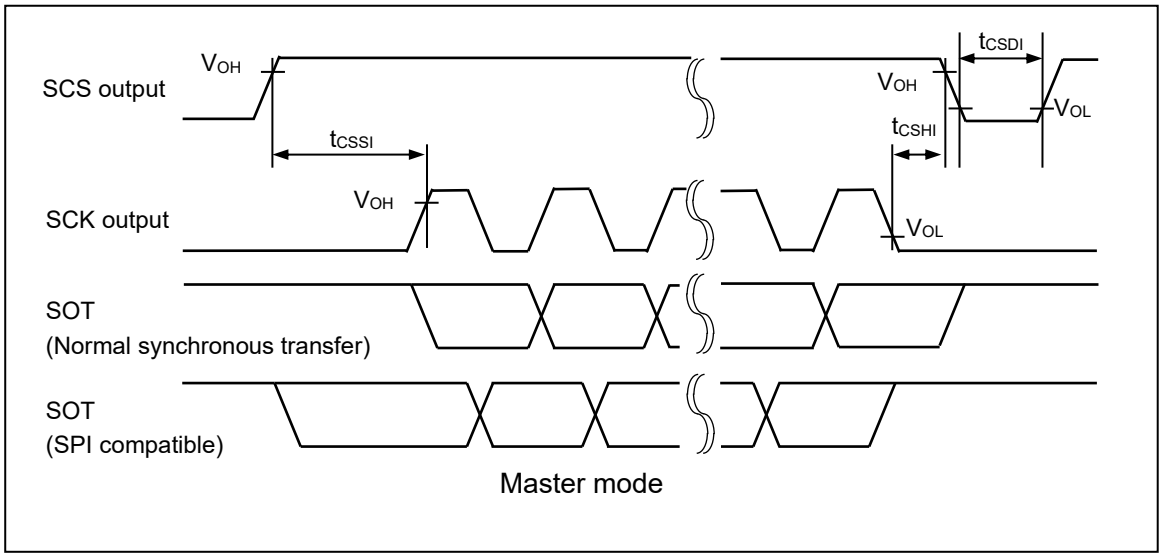

Master mode

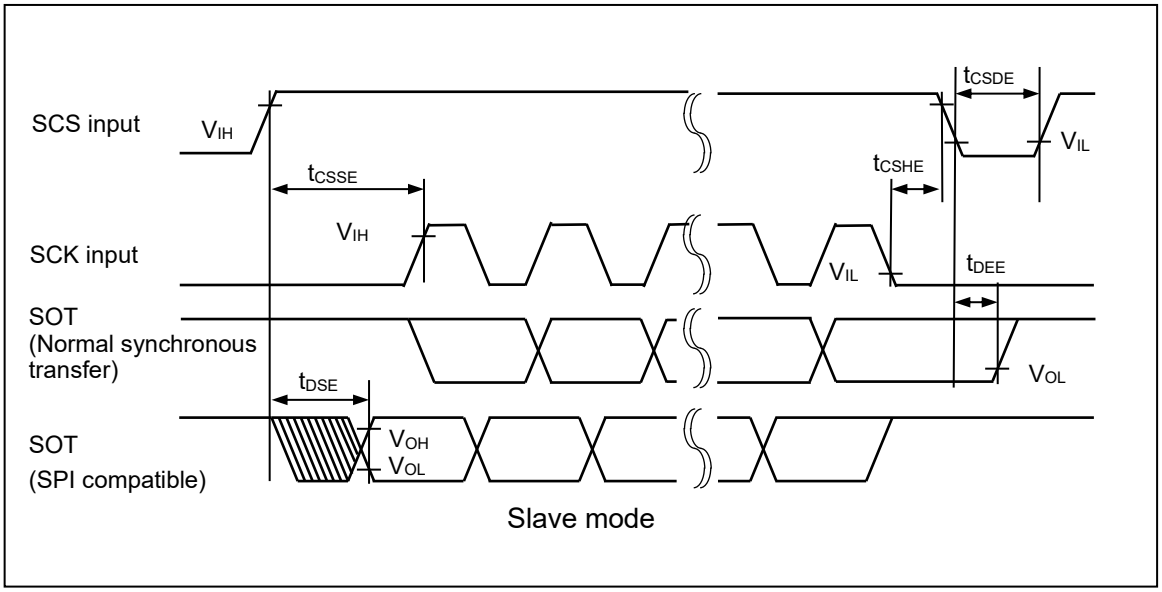

Slave mode

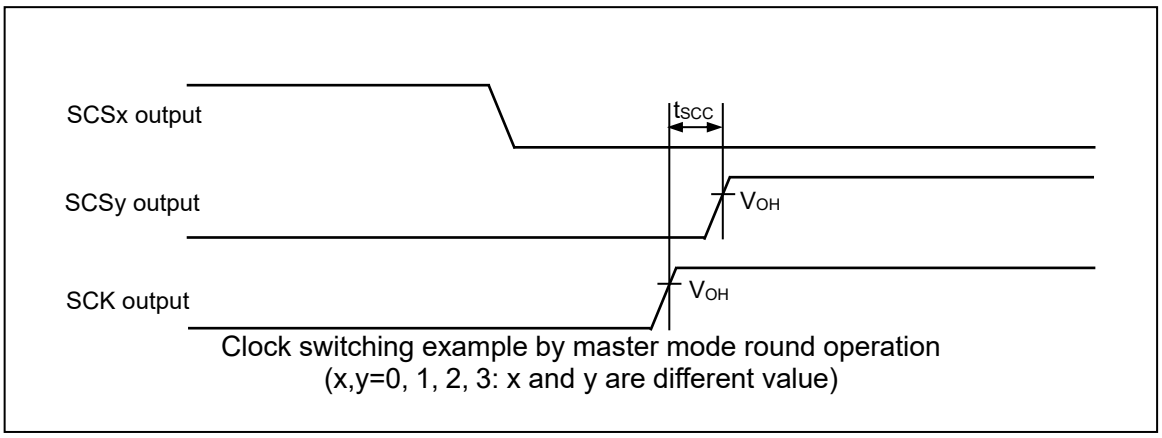

Clock switching example by master mode round operation
(x,y=0, 1, 2, 3: x and y are different value)

LIN interface (v2.1) (LIN communication control interface (v2.1)) timing (SMR: MD2-0 = 0b011)

(1) External Clock Selected (BGR: EXT = 1)

(T_A: Recommended operating conditions, Vcc3 = 3.3 V ± 0.3 V, Vcc5 = DVcc = 5.0 V ± 10% / 3.3 V ± 0.3 V, Vcc53 = 5.0 V ± 10% / 3.3 V ±0.3 V, V_{SS} = DV_{SS} = 0.0 V, V_{CC}12 = 1.15 V ±0.06 V)

Parameter	Symbol	Pin Name	Conditions	Value		Unit	Remarks
				Min	Max		
Serial clock "L" pulse width	t_{SLSH}	SCK0 to SCK4, SCK8 to SCK12	-	t_{CLK_LCPnA}*1+10	-	ns	
		SCK16 to SCK17		t_{CLK_COMP} +10	-	ns	
Serial clock "H" pulse width	t_{SHSL}	SCK0 to SCK4, SCK8 to SCK12		t_{CLK_LCPnA}*1+10	-	ns	
		SCK16 to SCK17		t_{CLK_COMP} +10	-	ns	
SCK falling time	t_F	SCK0 to SCK4, SCK8 to SCK12, SCK16 to SCK17		-	5	ns	
SCK rising time	t_R			-	5	ns	

*1: n = 0: ch.0 to ch.4, n = 1: ch.8 to ch.12

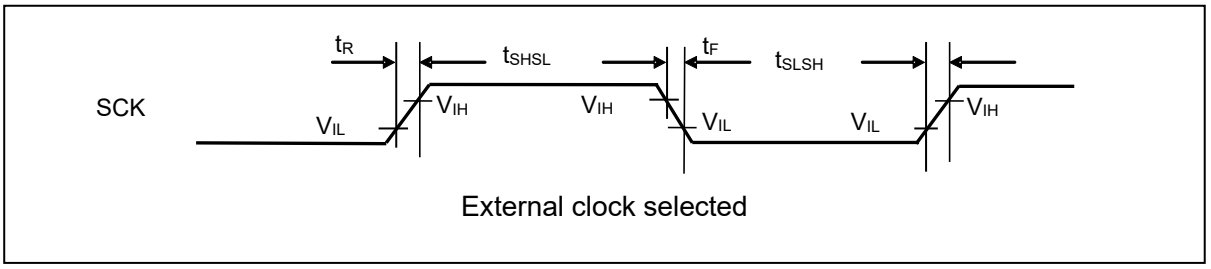

External clock selected

I²C timing (SMR: MD2-0 = 0b100)

(T_A: Recommended operating conditions, Vcc5 = Vcc53 = 5.0 V ±10 %, V_{CC}12 = 1.15V ±0.06 V, V_{SS} = 0.0 V)

Parameter	Symbol	Pin Name	Conditions	Standard Mode		Fast Mode		Unit	Remarks
				Min	Max	Min	Max		
SCL clock frequency	f_{SCL}	SCL0, SCL1, SCL4, SCL8 to SCL12, SCL16 to SCL17	C_L = 50pF, R = (Vp/I_{OL})*1	0	100	0	400	kHz	
Repeat "start" condition hold time SDA↓ → SCL↓	t_{HDSTA}	SDA0, SDA1, SDA4 SDA8 to SDA12, SDA16 to SDA17, SCL0, SCL1, SCL4, SCL8 to SCL12, SCL16 to SCL17		4.0	-	0.6	-	µs	
Period of "L" for SCL clock	t_{LOW}	SCL0, SCL1, SCL4, SCL8 to SCL12, SCL16 to SCL17		4.7	-	1.3	-	µs	
Period of "H" for SCL clock	t_{HIGH}			4.0	-	0.6	-	µs	
Repeat "start" condition setup time SCL↑ → SDA↓	t_{SUSTA}	SDA0, SDA1, SDA4 SDA8 to SDA12, SDA16 to SDA17, SCL0, SCL1, SCL4, SCL8 to SCL12, SCL16 to SCL17		4.7	-	0.6	-	µs	
Data hold time SCL↓ → SDA↓↑	t_{HDDAT}			0	3.45*2	0	0.9*3	µs	
Data setup time SDA↓↑ → SCL↑	t_{SUDAT}			250	-	100	-	ns	
"Stop" condition setup time SCL↑ → SDA↑	t_{SUSTO}			4.0	-	0.6	-	µs	
Bus-free time between "stop" condition and "start" condition	t_{BUF}	-		4.7	-	1.3	-	µs	
Noise filter	t_{SP}	-		t_{NFT}*4	-	t_{NFT}*4	-	ns	

Notes: Only ch.16 and ch.17 are standard mode/high-speed mode correspondence. In ch.0, ch.1, ch.4, and ch.8 to ch.12, only a standard mode is correspondence.

*1: R and C_L represent the pull-up resistance and load capacitance of the SCL and SDA output lines, respectively.
Vp shows that the power-supply voltage of the pull-up resistor and I_{OL} shows the V_{OL} guarantee current.

*2: The maximum t_{HDDAT} only has to be met if the device does not extend the "L" width (t_{LOW}) of the SCL signal.

*3: A fast mode I²C bus device can be used on a standard mode I²C bus system as long as the device satisfies the requirement of "t_{SUDAT} ≥ 250 ns".

*4: t_{NFT} = (NFCR: NFT[4:0]+1) x 2 x t_{CLK_LCP0A} (ch.0, ch.1, ch4)

t_{NFT} = (NFCR: NFT[4:0]+1) x 2 x t_{CLK_LCP1A} (ch.8 to ch.12)

t_{NFT} = (NFCR: NFT[4:0]+1) x 2 x t_{CLK_COMP} (ch.16 to ch.17)

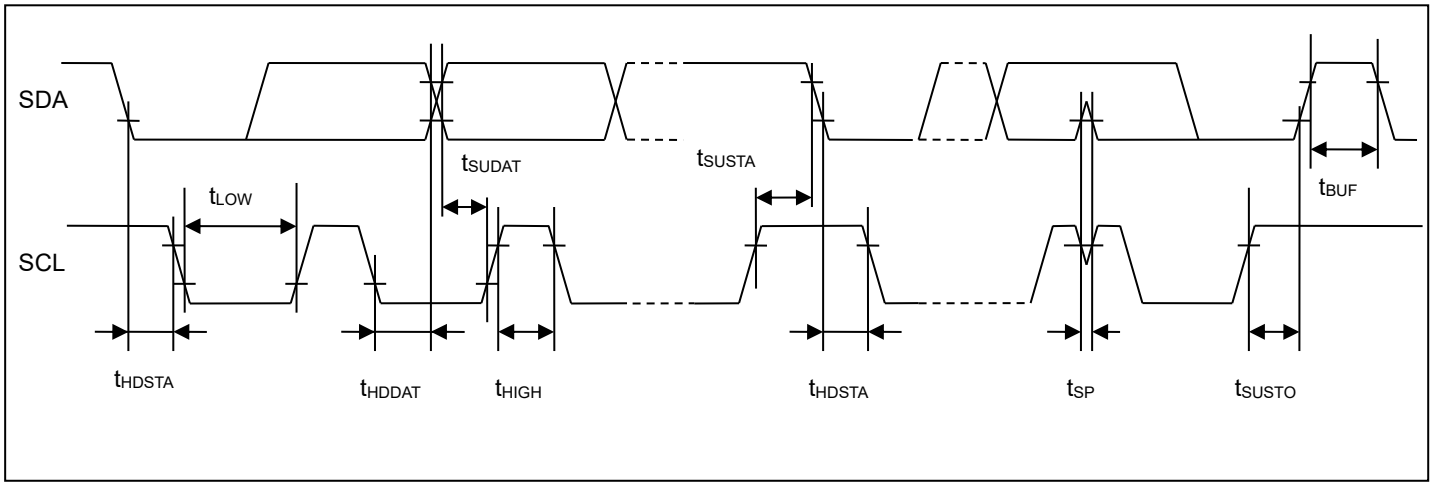
SDA
SCL
tLOW
tSUDAT
tSUSTA
tBUF
tHDSTA
tHDDAT
tHIGH
tHDSTA
tSP
tSUSTO

9.1.4.7 Timer Input

(T_A: Recommended operating conditions, Vcc3 = 3.3 V ± 0.3 V, Vcc5 = DVcc = 5.0 V ± 10 %, Vcc53 = 5.0 V ± 10 % / 3.3 V ± 0.3 V, V_{SS} = DV_{SS} = 0.0 V, $V_{CC}12$ = 1.15 V ± 0.06 V)

Parameter	Symbol	Pin Name	Conditions	Value		Unit	Remarks
				Min	Max		
Input pulse width	t_{TWH}, t_{TWL}	PPG0_TIN1 to PPG31_TIN1	-	$4t_{CLK_LCPnA}$*1	-	ns	$4t_{CLK_LCPnA}$*1 ≥100 ns
				100			$4t_{CLK_LCPnA}$*1 <100 ns
		ICU0_IN0 to ICU2_IN0, ICU8_IN0 to ICU10_IN0, ICU0_IN1 to ICU2_IN1, ICU8_IN1 to ICU10_IN1	-	$4t_{CLK_LCPnA}$*2	-	ns	$4t_{CLK_LCPnA}$*2 ≥100 ns
				100			$4t_{CLK_LCPnA}$*2 <100 ns
		FRT0_TEXT to FRT4_TEXT, FRT8_TEXT to FRT10_TEXT	-	$4t_{CLK_LCPnA}$*3	-	ns	$4t_{CLK_LCPnA}$*3 ≥100 ns
				100			$4t_{CLK_LCPnA}$*3 <100 ns
		TIN0 to TIN1, TIN16 to TIN17	-	$4t_{CLK_LCPnA}$*4	-	ns	$4t_{CLK_LCPnA}$*4 ≥100 ns
				100			$4t_{CLK_LCPnA}$*4 <100 ns
		TIN48 to TIN49	-	$4t_{CLK_COMP}$	-	ns	$4t_{CLK_COMP}$ ≥100 ns
				100			$4t_{CLK_COMP}$ <100 ns

*1: n = 0: unit.0 to unit.5, unit.12 to unit.31, n = 1: unit.6 to unit.11

*2: n = 0: unit.0 to unit.2, n = 1: unit.8 to unit.10

*3: n = 0: ch.0 to ch.4, n = 1: ch.8 to ch.10

*4: n = 0: ch.0 to ch.1, n = 1: ch.16 to ch.17

- Timer input timing

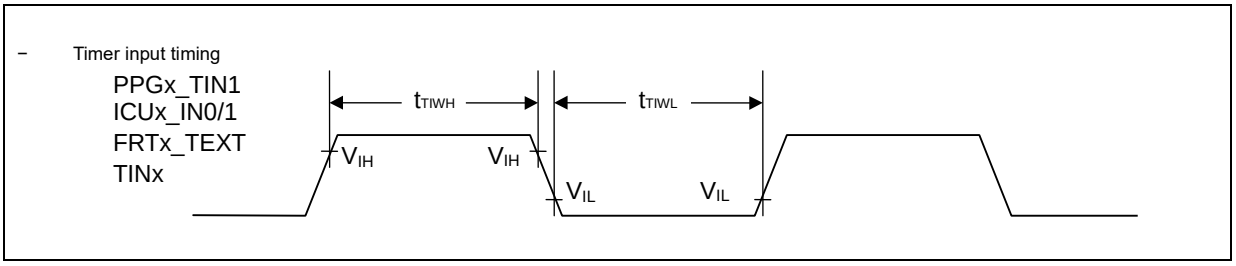

9.1.4.8 QPRC timing

(T_A: Recommended operating conditions, Vcc3 = 3.3 V ± 0.3 V, Vcc5 = DVcc = 5.0 V ± 10 %, Vcc53 = 5.0 V ± 10 % / 3.3 V ± 0.3 V, V_{SS} = DV_{SS} = 0.0 V, $V_{CC}12$ = 1.15 V ± 0.06 V)

Parameter	Symbol	Pin Name	Conditions	Value		Unit	Remarks
				Min	Max		
AIN pin "H" width	t_{AHL}	AIN8 to AIN9	-	$4t_{CLK_LCP1}$ / A	-	ns	$4t_{CLK_LCP1}$ / A ≥ 100 ns
AIN pin "L" width	t_{ALL}	AIN8 to AIN9	-				
BIN pin "H" width	t_{BHL}	BIN8 to BIN9	-				
BIN pin "L" width	t_{BLL}	BIN8 to BIN9	-				
Time from AIN pin "H" level to BIN rise	t_{AUBU}	AIN8 to AIN9, BIN8 to BIN9	PC_Mode2 or PC_Mode3				
Time from BIN pin "H" level to AIN fall	t_{BUAD}	AIN8 to AIN9, BIN8 to BIN9	PC_Mode2 or PC_Mode3				
Time from AIN pin "L" level to BIN fall	t_{ADBD}	AIN8 to AIN9, BIN8 to BIN9	PC_Mode2 or PC_Mode3				
Time from BIN pin "L" level to AIN rise	t_{BDAU}	AIN8 to AIN9, BIN8 to BIN9	PC_Mode2 or PC_Mode3				
Time from BIN pin "H" level to AIN rise	t_{BUAU}	AIN8 to AIN9, BIN8 to BIN9	PC_Mode2 or PC_Mode3				
Time from AIN pin "H" level to BIN fall	t_{AUBD}	AIN8 to AIN9, BIN8 to BIN9	PC_Mode2 or PC_Mode3				
Time from BIN pin "L" level to AIN fall	t_{BDAD}	AIN8 to AIN9, BIN8 to BIN9	PC_Mode2 or PC_Mode3				
Time from AIN pin "L" level to BIN rise	t_{ADBU}	AIN8 to AIN9, BIN8 to BIN9	PC_Mode2 or PC_Mode3				
ZIN pin "H" width	t_{ZHL}	ZIN8 to ZIN9	QCR: CGSC = "0"				
ZIN pin "L" width	t_{ZLL}	ZIN8 to ZIN9	QCR: CGSC = "0"				
Time from determined ZIN level to AIN/BIN rise and fall	t_{ZABE}	AIN8 to AIN9, BIN8 to BIN9, ZIN8 to ZIN9	QCR: CGSC = "1"				
Time from AIN/BIN rise and fall time to determined ZIN level	t_{ABEZ}	AIN8 to AIN9, BIN8 to BIN9, ZIN8 to ZIN9	QCR: CGSC = "1"				

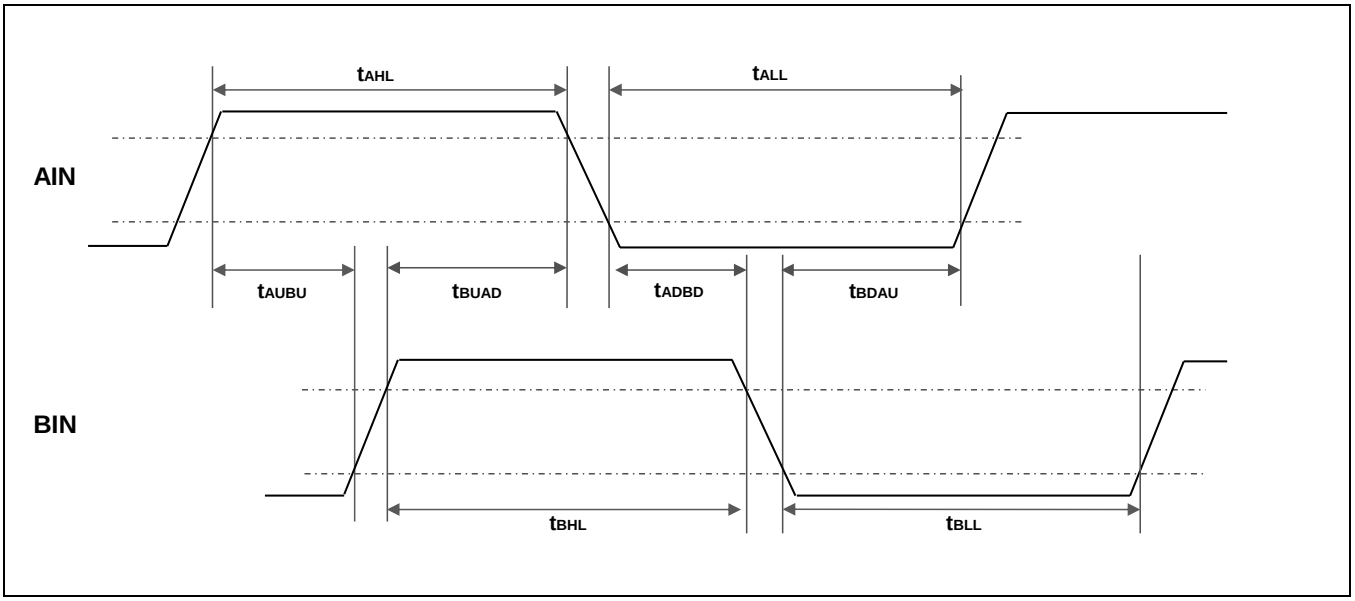
AIN
BIN
tAHL
tALL
tAUBU
tBUAD
tADBD
tBDAU
tBHL
tBLL

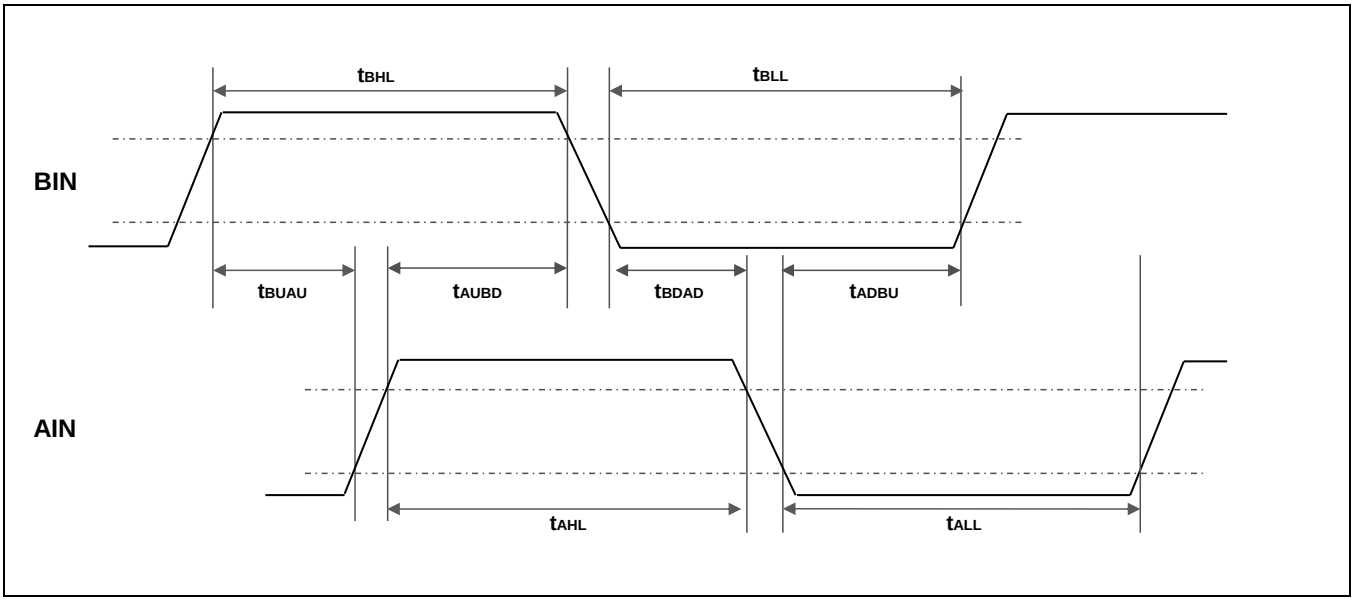
BIN
AIN
tBHL
tBLL
tBUAU
tAUBD
tBDAD
tADBU
tAHL
tALL

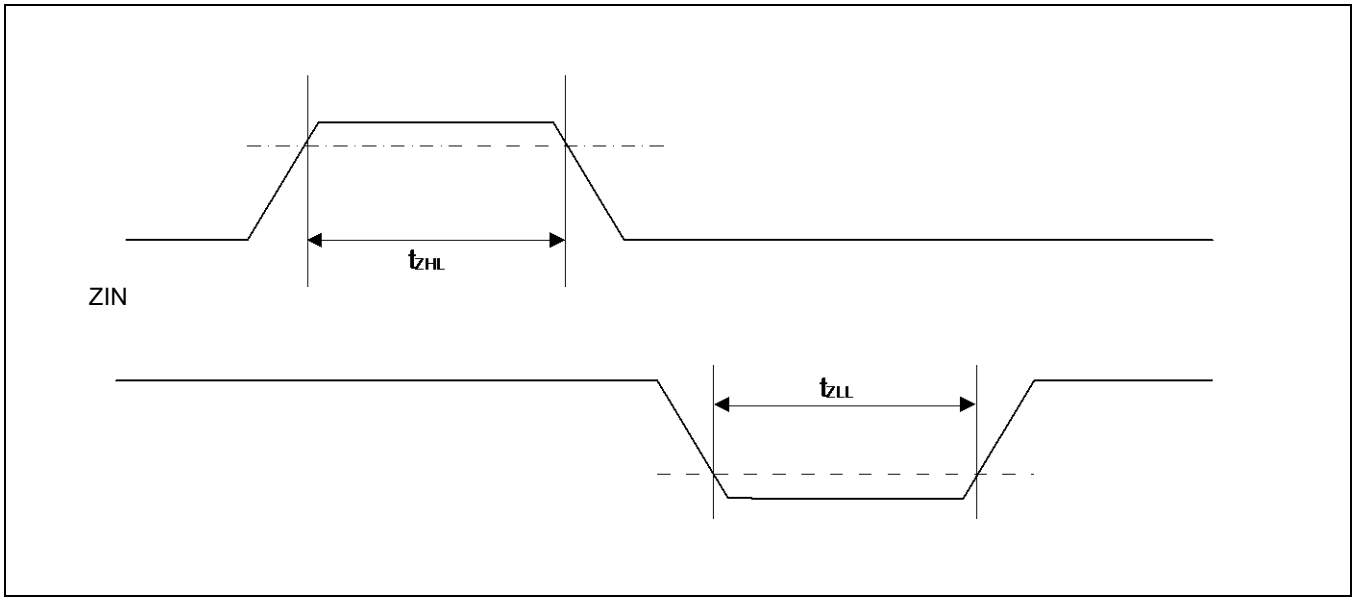
ZIN
tZHL
tZLL

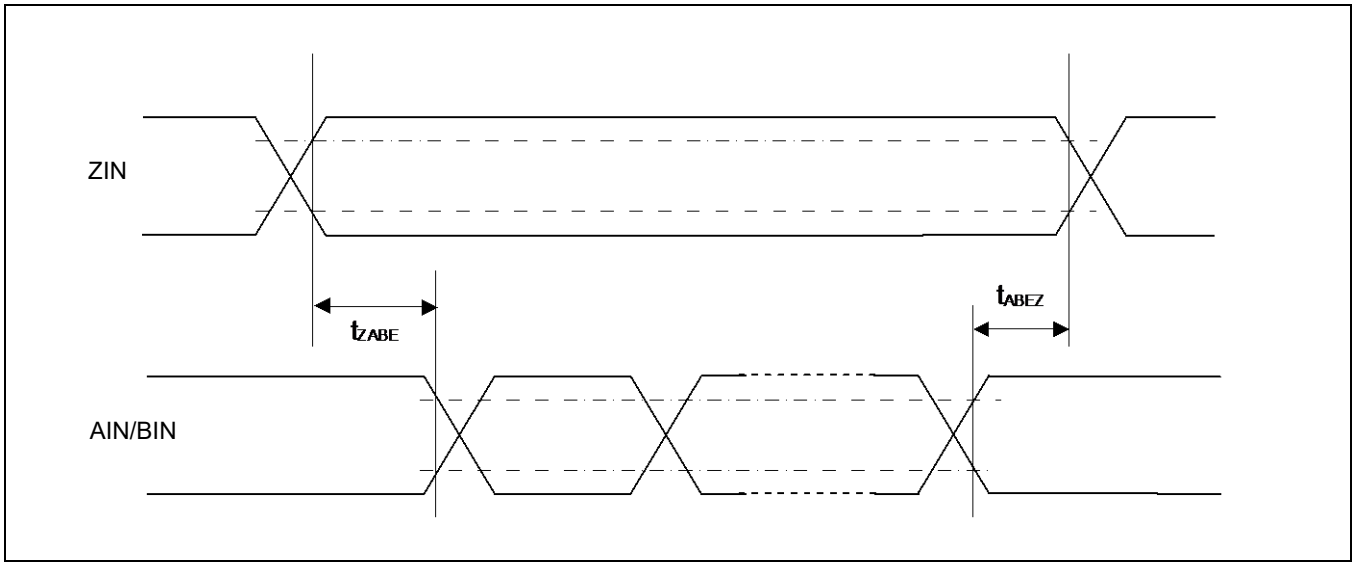
ZIN
tZABE
tABEZ
AIN/BIN

9.1.4.9 *Trigger Input*

(T_A: Recommended operating conditions, Vcc3 = 3.3 V ±0.3V, Vcc5 = DVcc = 5.0 V ± 10 %, Vcc53 = 5.0 V ± 10% / 3.3 V ± 0.3 V, V_{SS} = DV_{SS} = 0.0 V, V_{CC}12 = 1.15V ± 0.06 V)

Parameter	Symbol	Pin Name	Conditions	Value		Unit	Remarks
				Min	Max		
Input pulse width	t_{TRGH}, t_{TRGL}	EINT0 to EINT23	-	100	-	ns	
		ADTRG0 to ADTRG1	-	$5t_{CLK_LCP1A}$	-	ns	$5t_{CLK_LCP1A}$ ≥100 ns
				100			$5t_{CLK_LCP1A}$ <100 ns
		EINT0 to EINT23	-	1	-	µs	Stop mode

- Trigger input timing

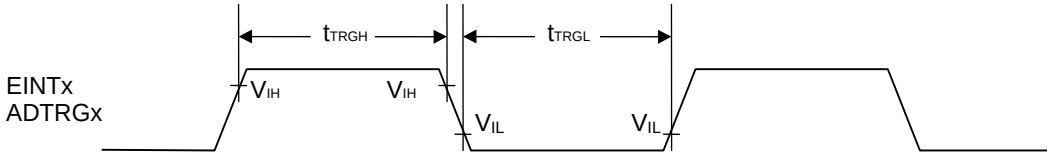

9.1.4.10 NMI Input

(T_A: Recommended operating conditions, Vcc5 = 5.0 V ± 10 %, V_{SS} = 0.0 V)

Parameter	Symbol	Pin Name	Conditions	Value		Unit	Remarks
				Min	Max		
Input pulse width	t_{NMIL}	NMIX	-	300	-	ns	

- NMIX input timing

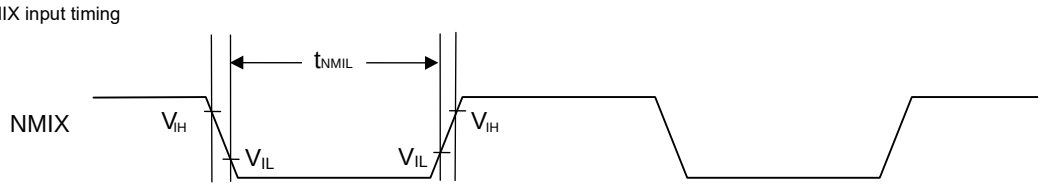

9.1.4.11 Low Voltage Detection (External Voltage)

Low-voltage detection (external low-voltage detection)

(T_A: Recommended operating conditions, V_{SS} = AV_{SS} = 0.0 V)

Parameter	Symbol	Pin Name	Conditions	Value			Unit	Remarks
				Min	Typ	Max		
Supply voltage range	V_{DP5}	VCC5	-	3.5 *3	-	5.5 *3	V	
				2.7 *4	-	3.6 *4		
	V_{DP3}	VCC3	-	2.7	-	3.6	V	
Detection voltage (before trimming)	V_{DLBT}	VCC5	*1	3.6 *3	4.0 *3	4.4 *3	V	When power-supply voltage falls and detection level is set initially
			*1 *5	2.3 *4	2.6 *4	2.9 *4		
		VCC3	*1 *5	2.3	2. 6	2.9	V	
Detection voltage (after trimming)	V_{DLAT}	VCC5	*1	3.86 *3	4.0 *3	4.14 *3	V	When power-supply voltage falls and detection level is set initially Typ±3.5%
			*1 *5	2.51 *4	2.6 *4	2.69 *4		
		VCC3	*1 *5	2.51	2.6	2.69	V	
Hysteresis width	V_{HYS}	VCC5	-	-	100	-	mV	When power-supply voltage rises
Low-voltage detection time	Td	-	-	-	-	40	µs	
Power supply voltage regulation	-	VCC5	-	-2	-	2	V/ms	*2

*1: If the fluctuation of the power supply is faster than the low-voltage detection time, there is a possibility to generate or release after the power supply voltage has exceeded the detection voltage range.

*2: Please suppress the change of the power supply within the range of the power-supply voltage regulation to do a low-voltage detection by detecting voltage (VDL)

*3: For S6J335xxSx or S6J335xxUx or S6J335xxTx or S6J335xxVx option.

*4: For S6J335xxAx or S6J335xxBx or S6J335xxCx or S6J335xxDx or S6J335xxEx or S6J335xxFx or S6J335xxGx or S6J335xxHx option.

*5: These LVD settings cannot be used to reliably generate a reset before voltage dips below minimum guaranteed MCU operation voltage, as these detection levels are below the minimum guaranteed MCU operation voltage (2.7V).

Notes:

- *The detection/release threshold values of following LVD channels are potentially below supply range defined in 9.1.2 Recommended operating condition.*
  LVDH1(VCC5)
  LVDH2(VCC3)
- *Please use these LVD channels with your own risk.*
- *Please monitor the external power supplies on the PCB if needed.*
- *For S6J335xxSC or S6J335xxUC or S6J335xxTC or S6J335xxVC options:*
  Depending on the threshold setting, LVDH1 can always detect VCC5 low voltage before the supply drops below the level defined in 9.1.2 Recommended Operating Condition. Please refer to S6J3300 series Hardware Manual for available list of LVDH1 threshold settings.

Low-voltage detection (1.15 V power supply low-voltage detection)

(T_A: Recommended operating conditions, V_{SS} = AV_{SS} = 0.0 V)

Parameter	Symbol	Pin Name	Conditions	Value			Unit	Remarks
				Min	Typ	Max		
Supply voltage range	V_{RDP12}	VCC12	-	1.09	-	1.21	V	
Detection voltage (before trimming) *	V_{RDLBT}	VCC12	*1 *2	0.7125	0.8125	0.9125	V	When power-supply voltage falls
Detection voltage (after trimming)	V_{RDLAT}	VCC12	*1 *2	0.7841	0.8125	0.8410	V	When power-supply voltage falls Typ±3.5%
Hysteresis width	V_{RHYS}	-	-	-	75	-	mV	When power-supply voltage rises
Low-voltage detection time	TRd	-	-	-	-	30	µs	

*1: If the power fluctuation time is less than the low-voltage detection time (TRd) and has passed the detection voltage range, the detection may occur or be canceled after the supply voltage has passed the detection voltage range.

*2: These LVD settings cannot be used to reliably generate a reset before voltage dips below minimum guaranteed MCU operation voltage, as these detection levels are below the minimum guaranteed MCU operation voltage (1.09V).

Notes:

- *The detection/release threshold values of LVDL2 channel is potentially below supply range defined in 9.1.2 Recommended Operating Condition.*
- *Please use this LVDL2 channel with your own risk.*
- *Please monitor the external power supplies on the PCB if needed.*

9.1.4.12 Low Voltage Detection (Internal Voltage)

Low-voltage detection (internal low-voltage detection for LVDL0)

(T_A: Recommended operating conditions, V_{SS} = AV_{SS} = 0.0 V)

Parameter	Symbol	Pin Name	Conditions	Value			Unit	Remarks
				Min	Typ	Max		
Supply voltage range	V_{RDP5}	-	-	1.05	-	1.21	V	
Detection voltage	V_{RDL}	-	*1 *2	0.75	0.85	0.95	V	When power-supply voltage falls
Hysteresis width	V_{RHYS}	-	-	-	75	-	mV	When power-supply voltage rises
Low-voltage detection time	TRd	-	-	-	-	30	µs	*3

*1: If the power fluctuation time is less than the low-voltage detection time (TRd) and has passed the detection voltage range, the detection may occur or be canceled after the supply voltage has passed the detection voltage range.

*2: This LVD cannot be used to reliably generate a reset before voltage dips below minimum guaranteed MCU operation voltage, as these detection levels are below the minimum guaranteed MCU operation voltage (1.05V).

*3: After the brown-out event where the voltage level dips below the detection threshold for less than this time, the detection may occur or be canceled.

Notes:

− *The detection/release threshold values of LVDL0 channel is potentially below supply range defined in 9.1.2 Recommended operating condition.*

Low-voltage detection (internal low-voltage detection for LVDL1)

(T_A: Recommended operating conditions, V_{SS} = AV_{SS} = 0.0 V)

Parameter	Symbol	Pin Name	Conditions	Value			Unit	Remarks
				Min	Typ	Max		
Supply voltage range	V_{RDP5}	-	-	1.05	-	1.21	V	
Detection voltage (before trimming)	V_{RDLBT}	-	*1 *2	0.775	0.875	0.975	V	When power-supply voltage falls
Detection voltage (after trimming)	V_{RDLAT}	-	*1 *2	0.844	0.875	0.906	V	When power-supply voltage falls Typ±3.5%
Hysteresis width	V_{RHYS}	-	-	-	75	-	mV	When power-supply voltage rises
Low-voltage detection time	TRd	-	-	-	-	30	µs	*3

*1: If the power fluctuation time is less than the low-voltage detection time (TRd) and has passed the detection voltage range, the detection may occur or be canceled after the supply voltage has passed the detection voltage range.

*2: This LVD cannot be used to reliably generate a reset before voltage dips below minimum guaranteed MCU operation voltage, as these detection levels are below the minimum guaranteed MCU operation voltage (1.05V).

*3: After the brown-out event where the voltage level dips below the detection threshold for less than this time, the detection may occur or be canceled.

Notes:

− *The detection/release threshold values of LVDL1 channel is potentially below supply range defined in 9.1.2 Recommended operating condition.*

9.1.4.13 High Current Output Slew Rate

(T_A: Recommended operating conditions,
$V_{CC}5$,$V_{CC}53$,DV_{CC} = 5.0 V ± 10 %, $V_{CC}3$ = 3.3 V ± 0.3 V, $V_{CC}12$ = 1.15 V ± 0.06 V, V_{SS} = DV_{SS} = AV_{SS} = 0.0 V)

Parameter	Symbol	Pin Name	Conditions	Value			Unit	Remarks
				Min	Typ	Max		
Output rise / fall time	t_{R2},t_{F2}	P1_17 to P1_31, P2_00 to P2_08	-	15	-	100	ns	Load capacitance 85pF

• Slew rate output timing

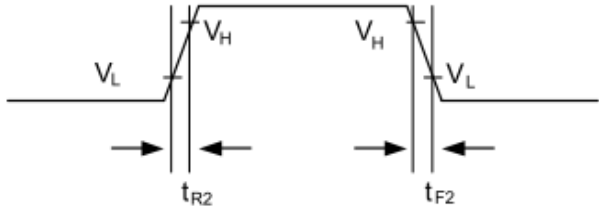

V_H=V_{OL8}+0.9 x (V_{OH8}-V_{OL8})
V_L=V_{OL8}+0.1 x (V_{OH8}-V_{OL8})

9.1.4.14 External bus interface timing

Clock output timing

(T_A: Recommended operating conditions, Vcc53 = 5.0 V ± 10 %, VSS = 0.0 V)

(External load capacitance 16 pF)

Parameter	Symbol	Pin Name	Conditions	Value		Unit	Remarks
				Min	Max		
Cycle time	t_{CYC}	MCLK	2mA is selected in ODR bit in PPC_PCFGR register.	62.5	-	ns	
Clock high width *1	t_{CHCL}	MCLK		d_Ht_{cyc} - 7	d_Ht_{cyc} + 7	ns	
Clock low width *2	t_{CLCH}	MCLK		d_Lt_{cyc} - 7	d_Lt_{cyc} + 7	ns	

*1: If division-ratio is even value, dH is equivalent to 0.5.

Otherwise, dH is calculated as the following.

dH = The number rounding "division-ratio x 0.5" down to the nearest integer / division-ratio

division-ratio is multiplication value among SYSDIV bit, HPMDIV bit and EXTBUSDIV bit setting.

ex). Setting SYSDIV to 1-division, HPMDIV to 7-division, EXTBUSDIV to 1-division, dH is calculated as 0.429.

*2: If division-ratio is even value, dL is equivalent to 0.5.

Otherwise, dL is calculated as the following.

dL = The number rounding "division-ratio x 0.5" up to the nearest integer / division-ratio

division-ratio is multiplication value among SYSDIV bit, HPMDIV bit and EXTBUSDIV bit setting.

ex). Setting SYSDIV to 1-division, HPMDIV to 7-division, EXTBUSDIV to 1-division, dL is calculated as 0.571.

– Clock output timing

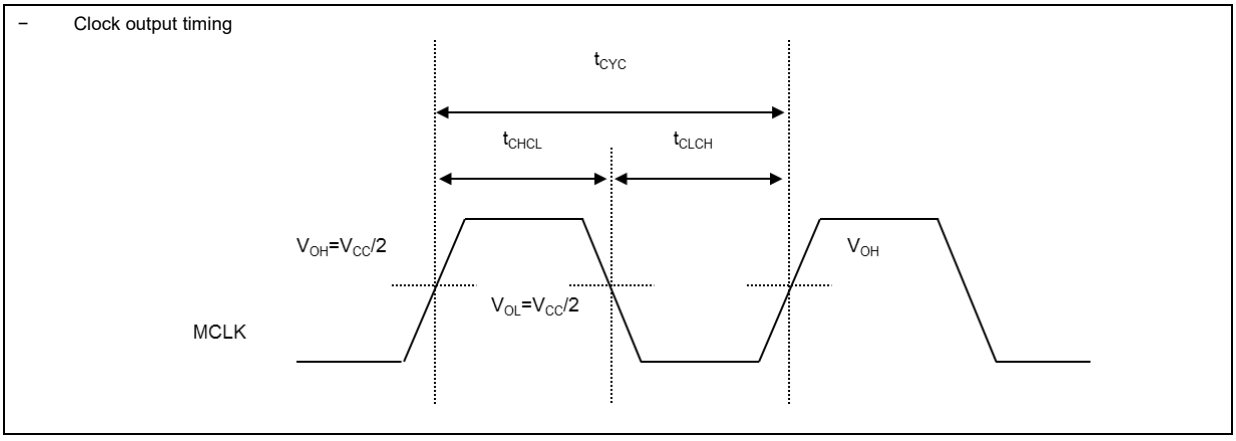

Common timing between read and write

(T_A: Recommended operating conditions, Vcc53 = 5.0 V ± 10 %, V_{SS} = 0.0 V)

(External load capacitance 16 pF)

Parameter	Symbol	Pin Name	Conditions	Value		Unit	Remarks
				Min	Max		
Cycle time (without MRDY)	t_{CYC}	MCLK	2mA is selected in ODR bit in PPC_PCFGR register.	62.5	-	ns	
Cycle time (with MRDY)	t_{CYC}	MCLK		62.5	-	ns	If using MRDY, set MCLK to 20 MHz or less.
CS delay time	t_{CSO}	MCLK, MCSX0 to MCSX3		0.5	18	ns	
Address delay time	t_{AO}	MCLK, MAD00 to MAD23		0.5	18	ns	
RDY setup time	t_{RDYS}	MCLK, MRDY	"CMOS Schmitt input" and "Disable noise filter" are selected in PPC_PCFGR register.	21	-	ns	
RDY hold time	t_{RDYH}	MCLK, MRDY		0	-	ns	

Notes: This is Target Spec.

- External bus I/F common timing

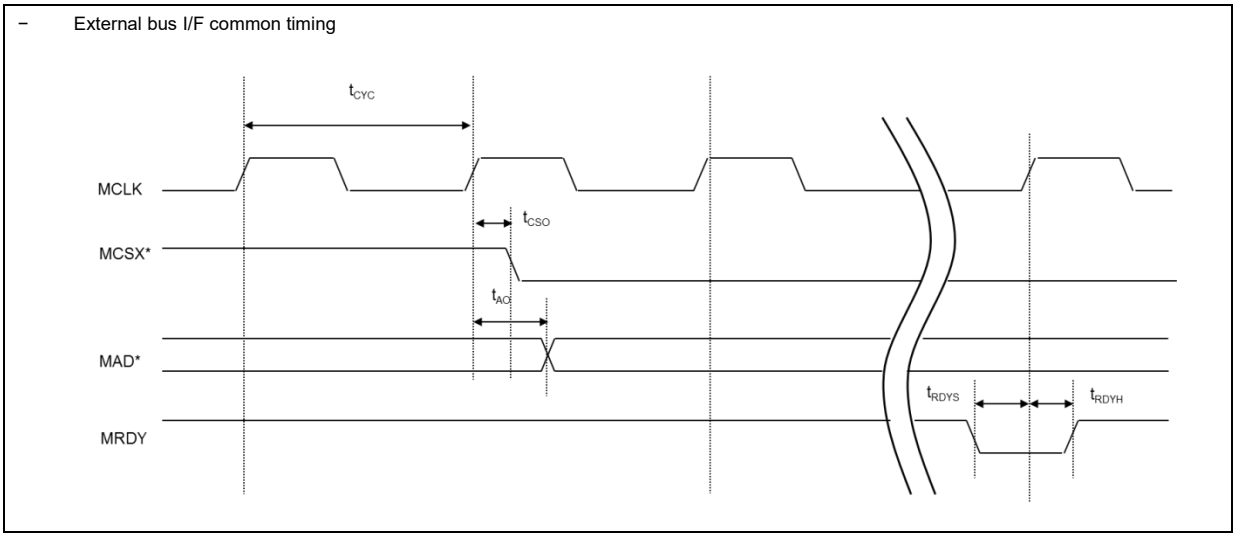

Read timing

(T_A: Recommended operating conditions, Vcc53 = 5.0 V ± 10 %, V_{SS} = 0.0 V)

(External load capacitance 16 pF)

Parameter	Symbol	Pin Name	Conditions	Value		Unit	Remarks
				Min	Max		
Data setup time	t_{DSR}	MOEX, MDATA00 to MDATA15	"CMOS Schmitt input" and "Disable noise filter" are selected in PPC_PCFGR register.	21+t_{cyc}	-	ns	
Data hold time	t_{DHR}	MOEX, MDATA00 to MDATA15		0	-	ns	
MOEX delay time	t_{RDO}	MCLK, MOEX	2mA is selected in ODR bit in PPC_PCFGR register.	0.5	18	ns	

Notes: This is Target Spec.

– External bus I/F read timing

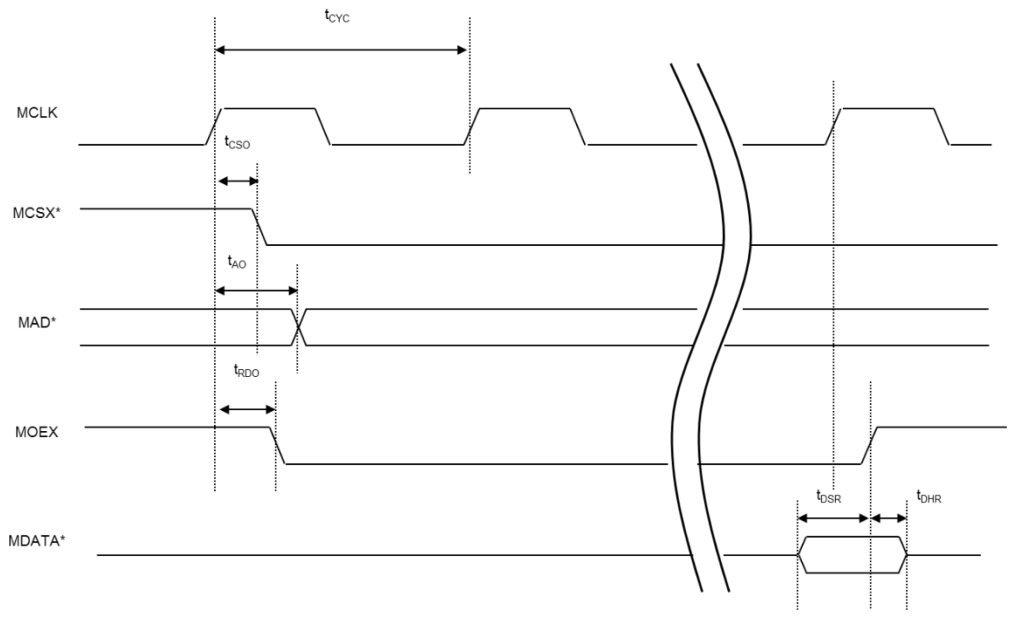

Write timing

(T_A: Recommended operating conditions, Vcc53 = 5.0 V ± 10 %, V_{SS} = 0.0 V)

(External load capacitance 16 pF)

Parameter	Symbol	Pin Name	Conditions	Value		Unit	Remarks
				Min	Max		
MWEX delay time	t_{WEO}	MCLK, MWEX	2mA is selected in ODR bit in PPC_PCFGR register.	0.5	18	ns	
Byte mask delay time	t_{WRO}	MCLK, MDQM0 to MDQM1		0.5	18	ns	
Data delay time	t_{DO}	MCLK, MDATA00 to MDATA15		0.5	18	ns	
Data delay time (Hi-Z output)	t_{DOZ}	MCLK, MDATA00 to MDATA15		-	18	ns	

Notes: This is Target Spec.

- External bus I/F write timing

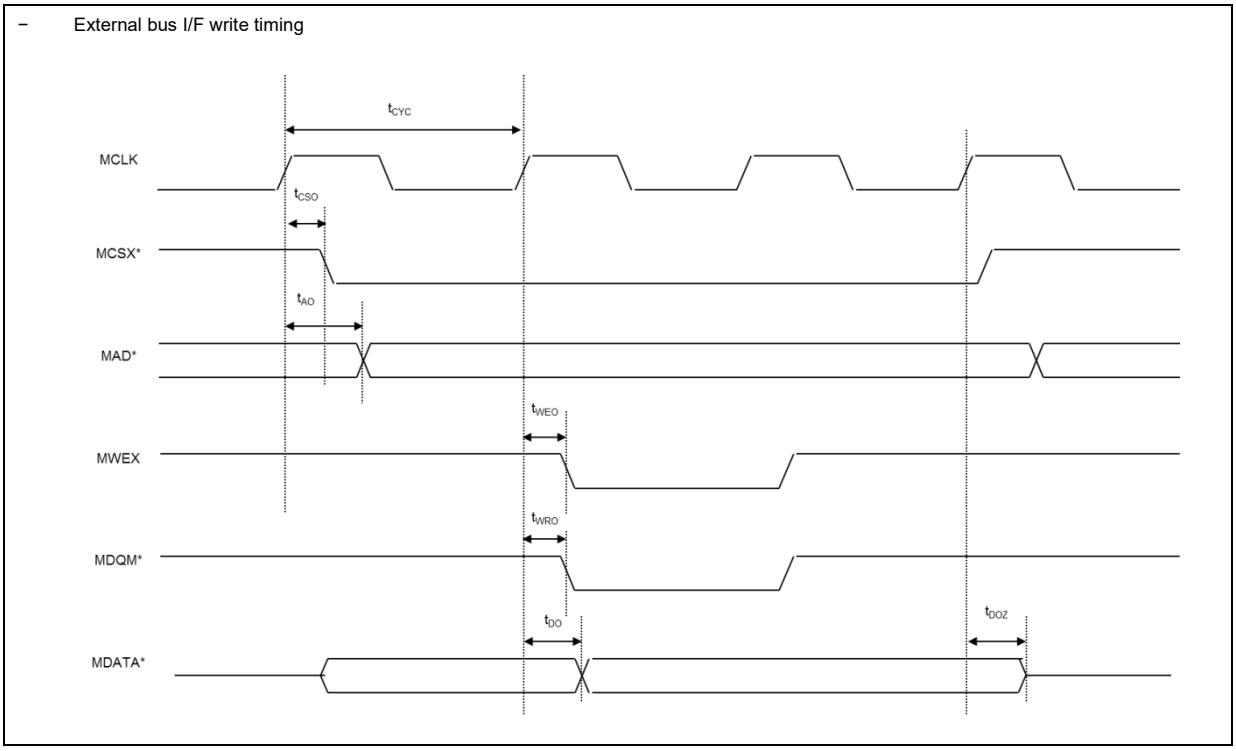

9.1.4.15 DDR-HSSPI

(1) DDR-HSSPI Interface Timing (SDR Mode)

(T_A: Recommended operating conditions, Vcc3 = 3.3 V ± 0.3 V, V_{SS} = DV_{SS} = AV_{SS} = 0.0 V)

Parameter	Symbol	Pin Name	Conditions	Value		Unit	Remarks
				Min	Max		
HSSPI clock cycle	t_{cyc}	M_SCLK0	(CL = 20pF, I_{OL} = -10mA, I_{OH} = 10mA),	10	-	ns	
				20	-		when Quad Page Program
M_SCLK↑ -> delayed sample clock↑	t_{spcnt}	-		0	31.5	ns	
M_SDATA -> M_SLCK↑ Input setup time	t_{isdata}	M_SDATA0_0-3 M_SDATA1_0-3		*1	-	ns	
M_SCLK↑ -> M_SDATA Input hold time	t_{ihdata}	M_SDATA0_0-3 M_SDATA1_0-3		*1	-	ns	
M_SCLK↑ -> M_SDATA Output delay time	t_{oddata}	M_SDATA0_0-3 M_SDATA1_0-3		-	t_{cyc}/2 + 2	ns	
M_SCLK↑ -> M_SDATA Output hold time	t_{ohdata}	M_SDATA0_0-3 M_SDATA1_0-3		t_{cyc}/2 - 3	-	ns	
M_SCLK↑ -> M_SSEL Output delay time	t_{odsel}	M_SSEL0, 1		- 12.00+(SS2CD+0.5)* t_{cyc}	-	ns	
M_SCLK↑ -> M_SSEL Output hold time	t_{ohsel}	M_SSEL0, 1		t_{cyc} - 2	-	ns	

Notes: This is Target Spec.

- *SS2CD [1:0] should be configured as 01, 10, or 11.*
- *For *1, the delay of the delay sample clock can be configured (DLP function).*

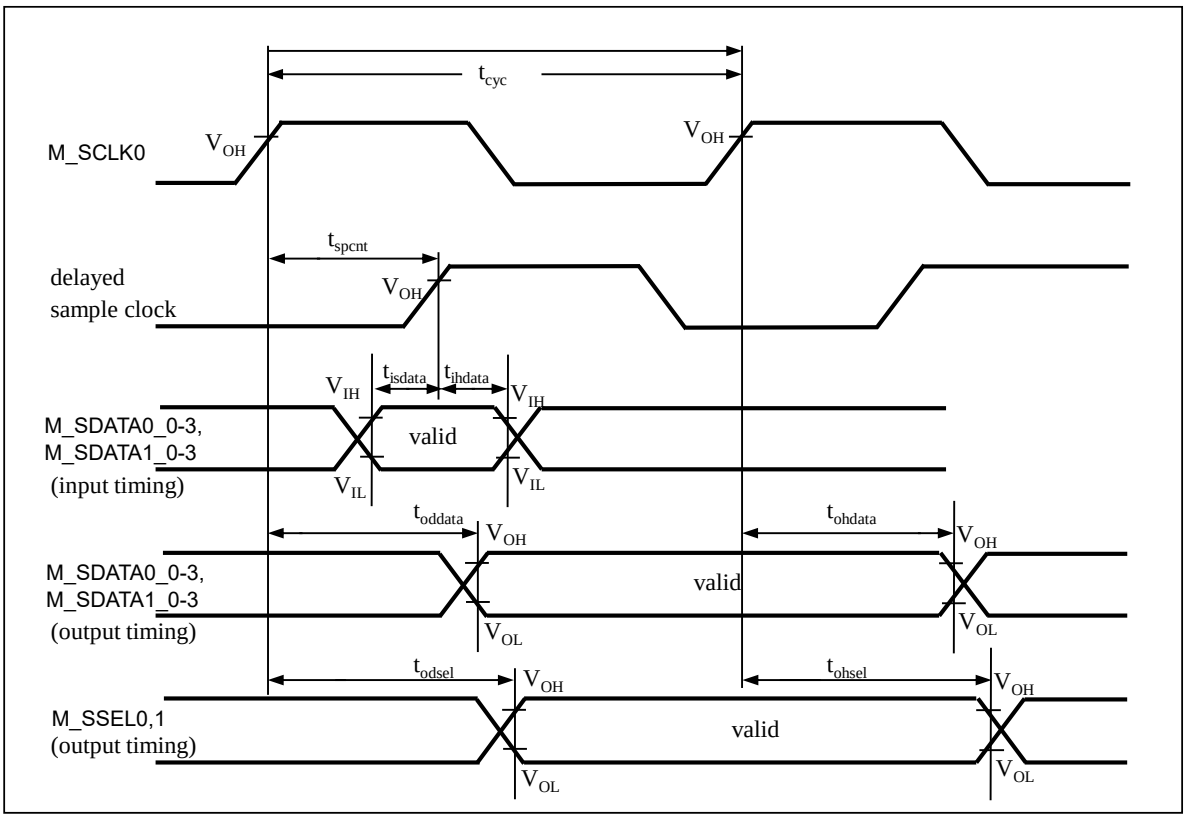
tcyc
M_SCLK0
VOH
VOH
tspcnt
delayed
sample clock
VOH
VIH
tisdata
tihdata
VIH
M_SDATA0_0-3,
M_SDATA1_0-3
(input timing)
valid
VIL
VIL
toddata
VOH
tohdata
VOH
M_SDATA0_0-3,
M_SDATA1_0-3
(output timing)
valid
VOL
VOL
todsel
VOH
tohsel
VOH
M_SSEL0,1
(output timing)
valid
VOL
VOL

(2) DDR-HSSPI Interface Timing (DDR Mode)

(T_A: Recommended operating conditions, Vcc3 = 3.3 V ± 0.3 V, V_{SS} = DV_{SS} = AV_{SS} = 0.0 V)

Parameter	Symbol	Pin Name	Conditions	Value		Unit	Remarks
				Min	Max		
HSSPI clock cycle	t_{cyc}	M_SCLK0	(CL = 20pF, I_{OL} = -10mA, I_{OH} = 10mA),	12.5	-	ns	
M_SCLK↑ -> delayed sample clock↑	t_{spcnt}			0	31.5	ns	
M_SDATA -> M_SLCK↑ Input setup time	t_{isdata}	M_SDATA0_0-3 M_SDATA1_0-3		*1	-	ns	
M_SLCK↑ -> M_SDATA Input hold time	t_{ihdata}	M_SDATA0_0-3 M_SDATA1_0-3		*1	-	ns	
M_SCLK↑ -> M_SDATA Output delay time	t_{oddata}	M_SDATA0_0-3 M_SDATA1_0-3		-	t_{cyc}/4 + 1.5	ns	
M_SCLK↑ -> M_SDATA Output hold time	t_{ohdata}	M_SDATA0_0-3 M_SDATA1_0-3		Tcyc/4 - 1.0	-	ns	
M_SCLK↑ -> M_SSEL Output delay time	t_{odsel}	M_SSEL0, 1		- 15.75+(SS2CD +0.5)*t_{cyc}	-	ns	
M_SCLK↑ -> M_SSEL Output hold time	t_{ohsel}	M_SSEL0, 1		0.75*t_{cyc} - 2.0	-	ns	

Notes: This is Target Spec.

- *SS2CD [1:0] should be configured as 01, 10, or 11.*
- *For *1, the delay of the delay sample clock can be configured (DLP function)*

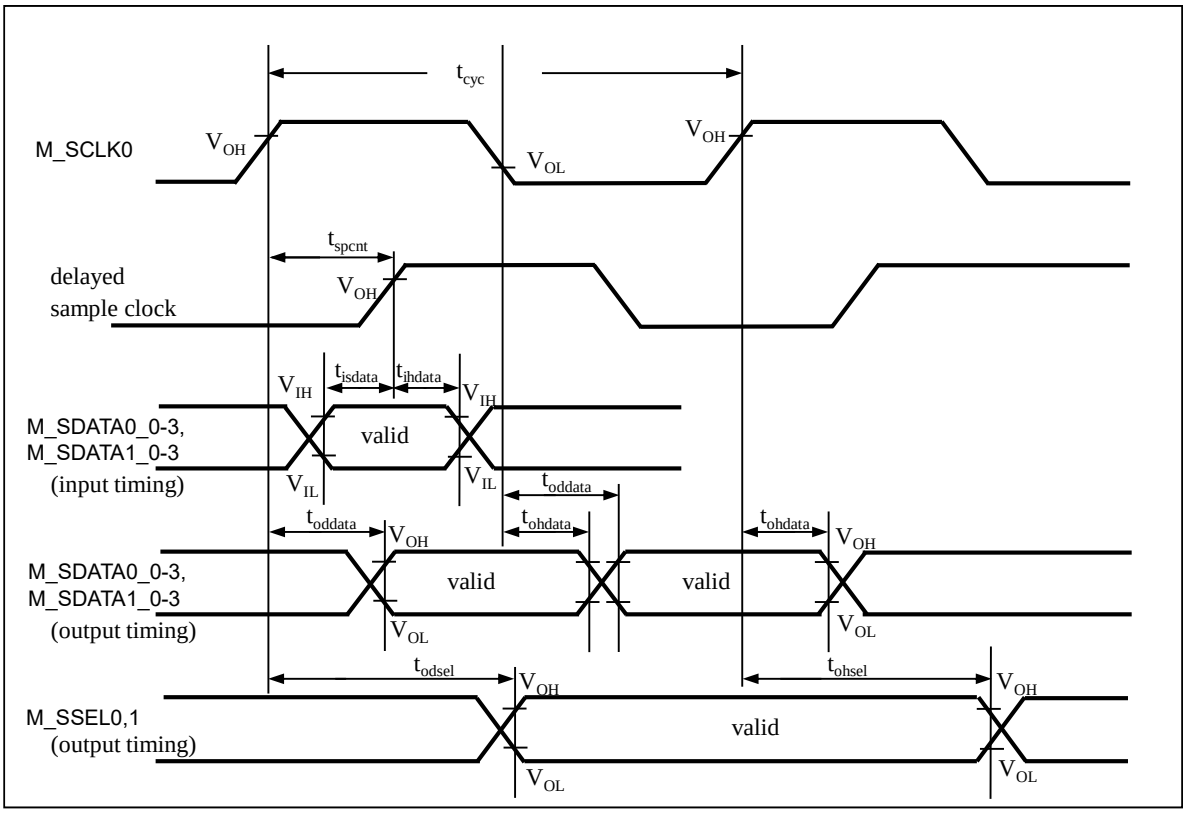
tcyc
M_SCLK0
VOH
VOL
VOH
tspcnt
delayed
sample clock
VOH
VIH
tisdata
tihdata
VIH
M_SDATA0_0-3,
M_SDATA1_0-3
(input timing)
valid
VIL
VIL
toddata
toddata
VOH
tohdata
tohdata
VOH
M_SDATA0_0-3,
M_SDATA1_0-3
(output timing)
valid
valid
VOL
VOL
todsel
tohsel
VOH
VOH
M_SSEL0,1
(output timing)
valid
VOL
VOL

9.1.4.16 Hyper BUS

(1) Hyper Bus Write Timing (HyperFlash)

(T_A: Recommended operating conditions, Vcc3 = 3.3 V ± 0.3 V, V_{SS} = DV_{SS} = AV_{SS} = 0.0 V)

Parameter	Symbol	Pin Name	Conditions	Value		Unit	Remarks
				Min	Max		
Hyper Bus clock cycle	t_{CKCYC}	M_CK	(CL = 20pF, I_{OL} = -10mA, I_{OH} = 10mA),	10.0	-	ns	
CS↑↓ -> CK↑ Chip Select setup time	t_{CSS}	M_CS#_1,2		t_{CKCYC} -2.0	-	ns	
DQ -> CK↑↓ Input setup time	t_{IS}	M_DQ7-0		1.25	-	ns	
CK↑↓ -> DQ Input hold time	t_{IH}	M_DQ7-0		1.25	-	ns	
CK↓ -> CS↑ Chip select hold time	t_{CSH}	M_CS#_1,2		t_{CKCYC}/2	-	ns	

Notes: This is Target Spec

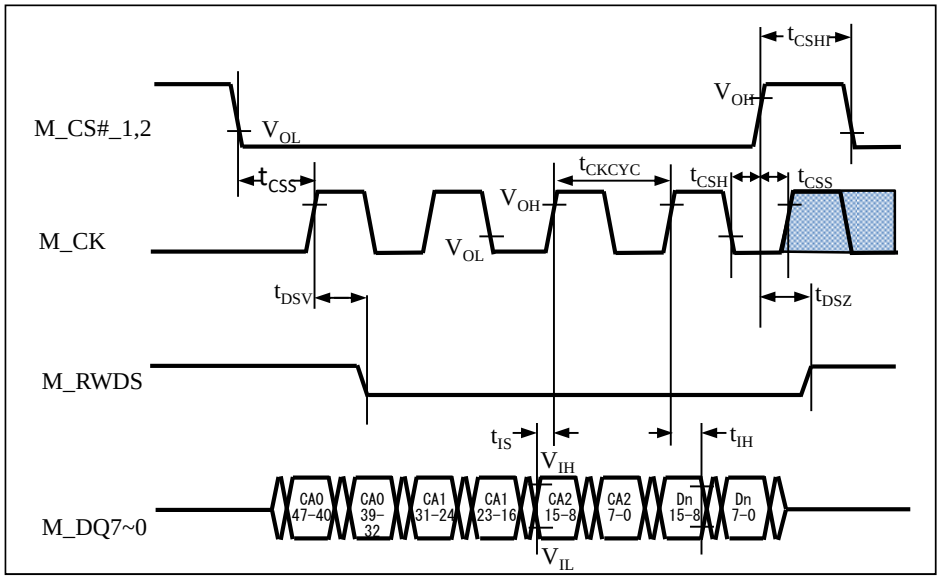

(2) Hyper Bus Write Timing (HyperRAM)

(T_A: Recommended operating conditions, Vcc3 = 3.3 V ± 0.3 V, V_{SS} = DV_{SS} = AV_{SS} = 0.0 V)

Parameter	Symbol	Pin Name	Conditions	Value		Unit	Remarks
				Min	Max		
Hyper Bus clock cycle	t_{CKCYC}	M_CK	(CL = 20pF, I_{OL} = -10mA, I_{OH} = 10mA),	10.0	-	ns	
CS↑↓ -> CK↑ Chip Select setup time	t_{CSS}	M_CS#_1,2		t_{CKCYC} - 2.0	-	ns	
DQ -> CK↑↓ Input setup time	t_{IS}	M_DQ7-0		1.25	-	ns	
CK↑↓ -> DQ Input hold time	t_{IH}	M_DQ7-0		1.25	-	ns	
CK↓ -> CS↑ Chip select hold time	t_{CSH}	M_CS#_1,2		t_{CKCYC}/2	-	ns	
RWDS↓-> CK↓ Data Mask Valid	t_{DMV}	M_RWDS		1	-	ns	
CK↑ -> RWDS↑↓ Refresh Indicator Valid	t_{RIV}	M_RWDS		-	6	ns	
CK↑ -> RWDS(Hi-z) Refresh Indicator Hold	t_{RIH}	M_RWDS		0	-	ns	

Notes: This is Target Spec.

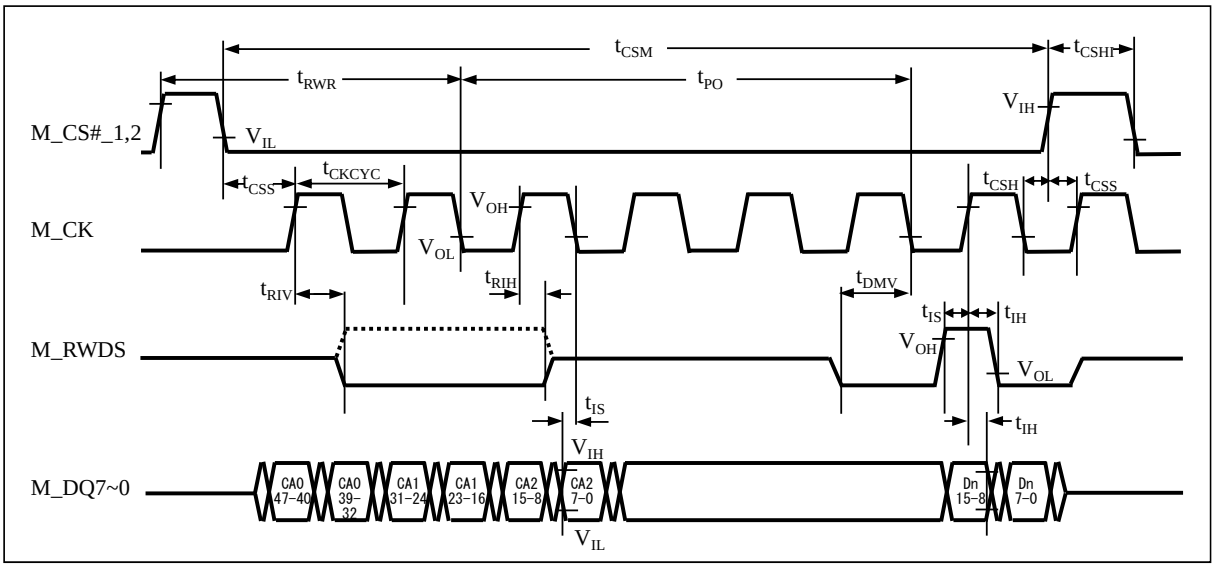

(3) Hyper Bus Read Timing (HyperFlash)

(T_A: Recommended operating conditions, Vcc3 = 3.3 V ± 3.3 V, V_{SS} = DV_{SS} = AV_{SS} = 0.0 V)

Parameter	Symbol	Pin Name	Conditions	Value		Unit	Remarks
				Min	Max		
Hyper Bus clock cycle	t_{RDSCYC}	M_CK	(CL = 20pF, I_{OL} = -10mA, I_{OH} = 10mA),	10.0	-	ns	
CS↑↓ -> CK↑ Chip Select setup time	t_{CSS}	M_CS#_1,2		t_{RDSCYC} -2.0	-	ns	
DQ -> CK↑↓ Setup time	t_{IS}	M_DQ7-0		1.25	-	ns	
CK↑↓ -> DQ Hold time	t_{IH}	M_DQ7-0		1.25	-	ns	
CK↓ -> CS↑ Chip select hold time	t_{CSH}	M_CS#_1,2		t_{RDSCYC} / 2	-	ns	
RDS↑↓> DQ Setup time	t_{DSS}	M_DQ7-0		-0.8	-	ns	
RDS↑↓> DQ Hold time	t_{DSH}	M_DQ7-0		-0.8	-	ns	

Notes: This is Target Spec.

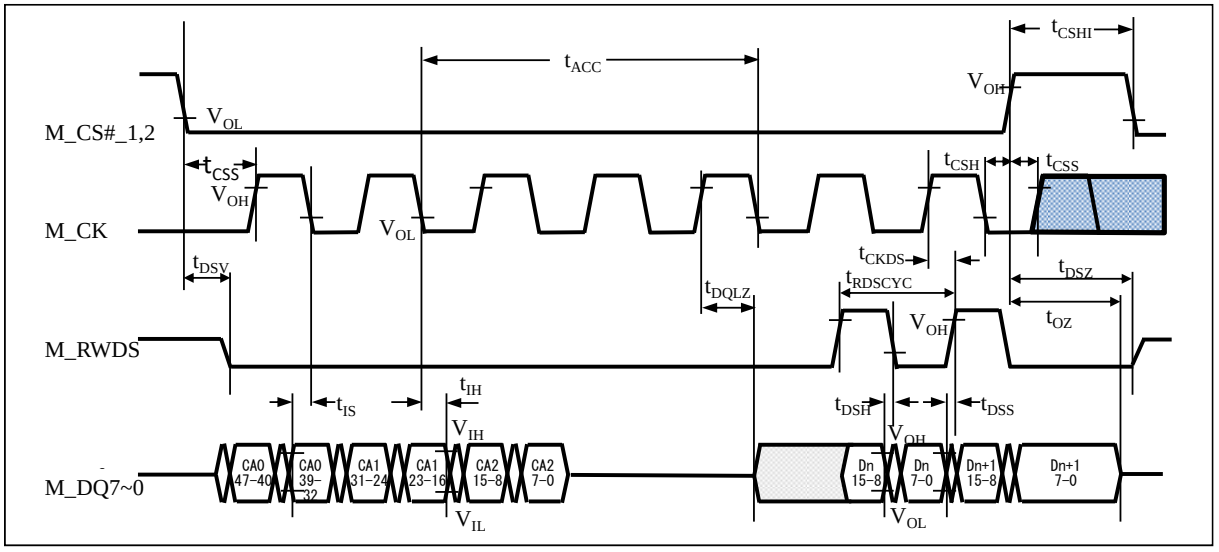

(4) Hyper Bus Read Timing (HyperRAM)

(T_A: Recommended operating conditions, Vcc3 = 3.3 V ± 0.3V, V_{SS} = DV_{SS} = AV_{SS} = 0.0 V)

Parameter	Symbol	Pin Name	Conditions	Value		Unit	Remarks
				Min	Max		
Hyper Bus clock cycle	t_{RDSCYC}	M_CK	(CL = 20pF, I_{OL} = -10mA, I_{OH} = 10mA),	10.0	-	ns	
CS↑↓ -> CK↑ Chip Select setup time	t_{CSS}	M_CS#_1,2		t_{RDSCYC} -2.0	-	ns	
DQ -> CK↑↓ Setup time	t_{IS}	M_DQ7-0		1.25	-	ns	
CK↑↓ -> DQ Hold time	t_{IH}	M_DQ7-0		1.25	-	ns	
CK↓ -> CS↑ Chip select hold time	t_{CSH}	M_CS#_1,2		t_{RDSCYC} /2	-	ns	
RWDS↑↓> DQ (valid) Setup time	t_{DSS}	M_DQ7-0		-0.8	-	ns	
RWDS↑↓> DQ (invalid) Hold time	t_{DSH}	M_DQ7-0		-0.8	-	ns	
CK↑ -> RWDS↑↓ Refresh Indicator Valid	t_{RIV}	M_RWDS		-	6	ns	
CK↑ -> RWDS(Hi-z) Refresh Indicator Hold	t_{RIH}	M_RWDS		0	-	ns	

Notes: This is Target Spec.

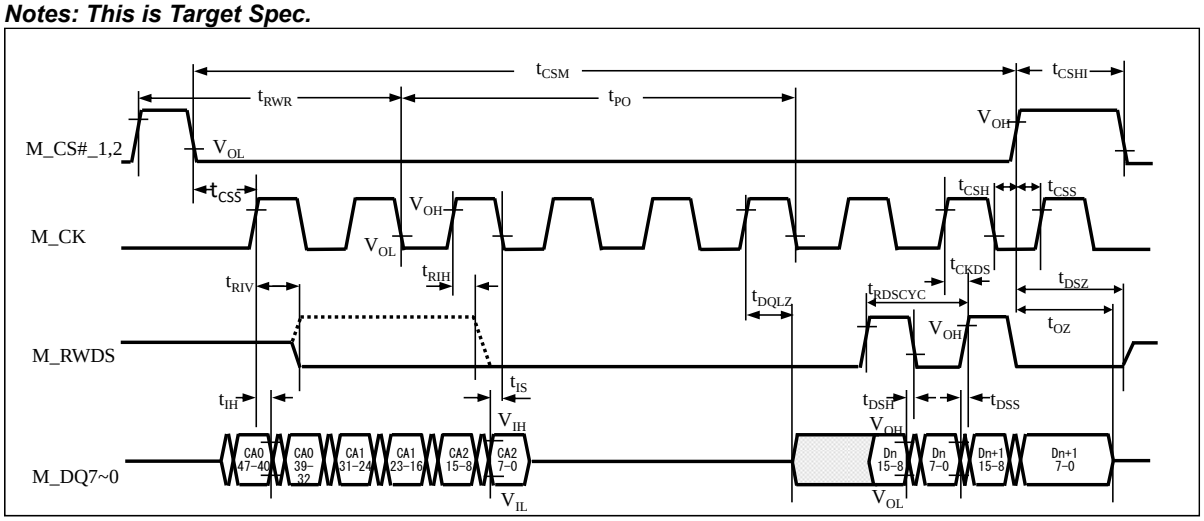

9.1.4.17 Ethernet AVB

(1) Ethernet Receive Timing

(T_A: Recommended operating conditions, Vcc53 = Vcc3 = 3.3 V ± 0.3 V, V_{SS} = DV_{SS} = AV_{SS} = 0.0 V)

Parameter	Symbol	Pin Name	Conditions	Value		Unit	Remarks
				Min	Max		
RXCLK cycle	t_{RXCYC}	RXCLK	-	40.0	-	ns	-
RX setup time	t_{RXS}	RXER RXDV RXD0-3		10.0	-	ns	t_{RXCYC} - 30ns
RX hold time	t_{RXH}	RXER RXDV RXD0-3		0	-	ns	-

Notes: This is Target Spec.

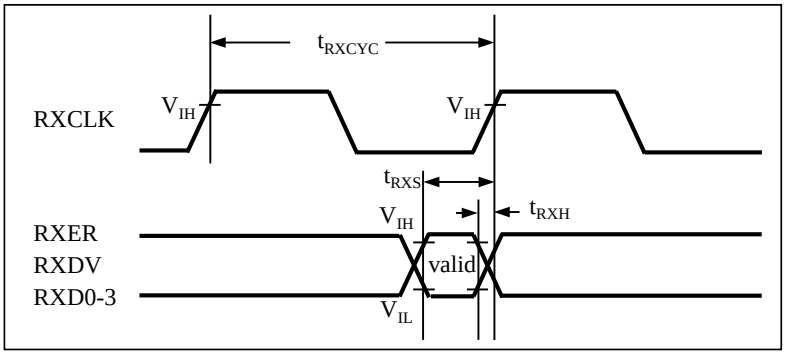

(2) Ethernet Transmit Timing

(T_A: Recommended operating conditions, Vcc53 = Vcc3 = 3.3 V ± 0.3 V, V_{SS} = DV_{SS} = AV_{SS} = 0.0 V)

Parameter	Symbol	Pin Name	Conditions	Value		Unit	Remarks
				Min	Max		
TXCLK cycle	t_{TXCYC}	TXCLK	(CL = 20pF, IOL = -5mA, IOH = 5mA),	40.0	-	ns	-
COL/CRS input setup time	t_{CRXS}	COL CRS		12.0	-	ns	-
COL/CRS input hold time	t_{CRXH}	COL CRS		0.5	-	ns	-
Tx delay time	t_{TXD}	TXER TXEN TXD0-3		0.5	25	ns	-

Notes: This is Target Spec.

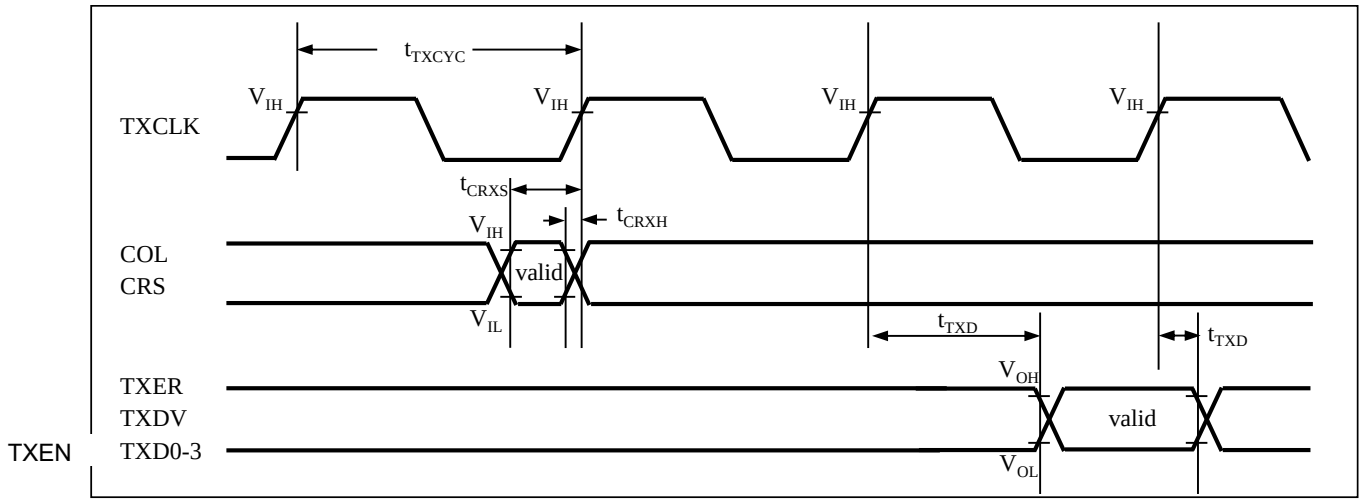

(3) MDIO Timing

(T_A: Recommended operating conditions, Vcc53 = Vcc3 = 3.3 V ± 0.3 V, V_{SS} = DV_{SS} = AV_{SS} = 0.0 V)

Parameter	Symbol	Pin Name	Conditions	Value		Unit	Remarks
				Min	Max		
MDC cycle	t_{MDCYC}	MDC	(CL = 20pF, IOL = -5mA, IOH = 5mA),	400.0	-	ns	-
MDIO input setup time	t_{MDIS}	MDIO		100.0	-	ns	
MDIO input hold time	t_{MDIH}	MDIO		0.0	-	ns	
MDIO output delay time	t_{MDOD}	MDIO		10.0	190.0	ns	

Notes: This is Target Spec.

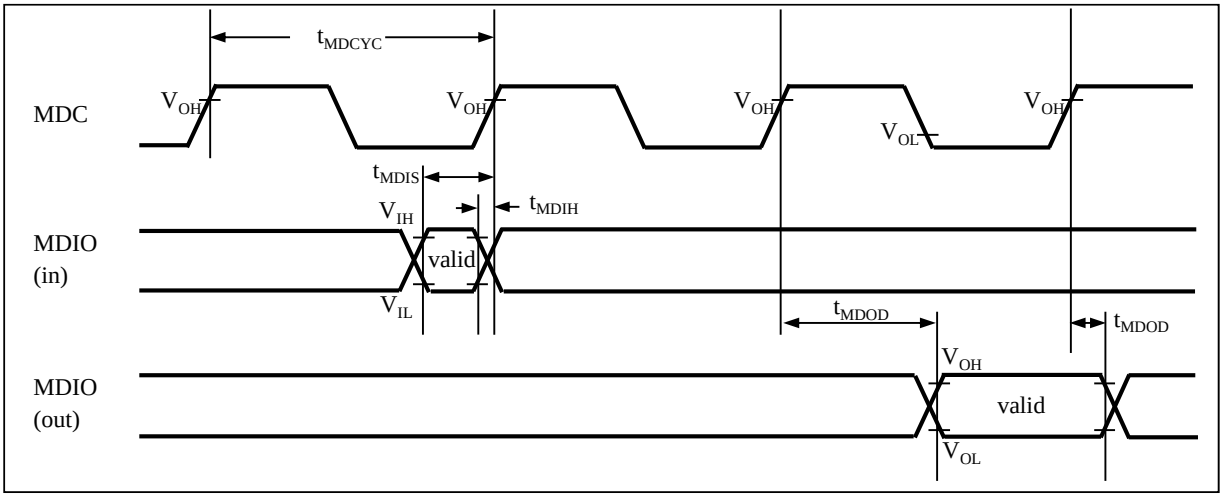

9.1.4.18 Port Noise Filter

(T_A: Recommended operating conditions, $V_{CC}5$,$V_{CC}53$,$DV_{CC}5$ = 5.0 V ± 10 %, V_{SS} = DV_{SS} = AV_{SS} = 0.0 V)

Parameter	Symbol	Pin Name	Conditions	Value		Unit	Remarks
				Min	Max		
Width for input removal	-	ALL GPIO	-	-	17	ns	-

* Input pulse width less than at least 17nm is removed when Port noise filter is enabled.

9.1.4.19 Power and Reset Sequence

VCC5 and VCC12 sequence

(T_A: Recommended operating conditions, VSS = 0.0 V)

Parameter	Symbol	Pin Name	Conditions	Value		Unit	Remarks
				Min	Max		
Wait time from LVDH1 level detection to falling VCC12	t_{FV12}	VCC12	-	0.6	-	ms	-
VCC12 stabilization time during power-on	t_{RV12}	VCC12	-	-	14.2	ms	-

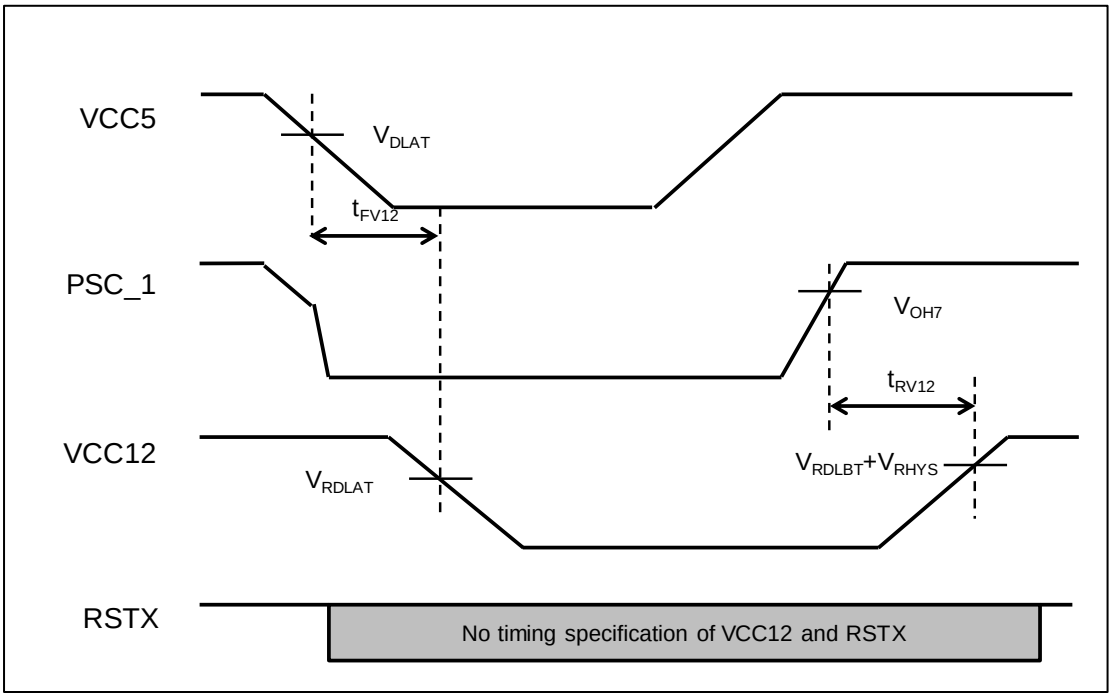

Note:

- *VDLAT VRDLAT, VRDLBT and VRHYS are referred to "9.1.4.11 Low Voltage Detection (External Voltage)". VOH7 is referred to "9.1.3 DC Characteristics".*
- *LVDH1 reset need to be "always enable". For details, see the TRAVEO™ T1G Platform Hardware Manual.*
- *The above sequence needs not to be applied in the following cases the application enters PSS mode: "VCC12 is controlled by PSC_1 at entry and exit from PSS mode"(Normal Sequence).*

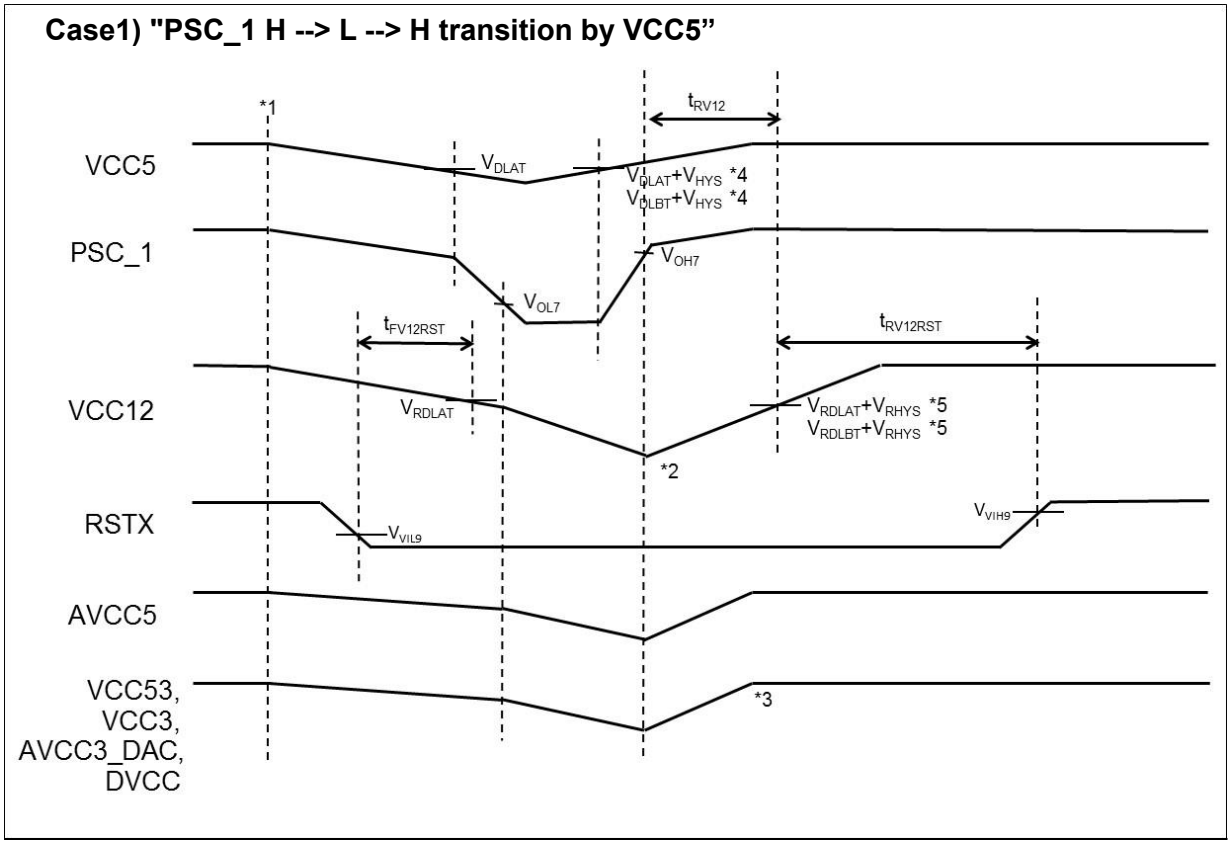

Note:

- *RSTX controlled by VCC5.*
- *VCC12 and AVCC5 controlled by PSC_1.*
- *VCC53, VCC3, AVCC3_DAC and DVCC controlled by PSC_1. Can be controlled by VCC5 GPIO also.*
- *VDLAT, VDLBT and VHYS are referred to "9.1.4.11 Low Voltage Detection (External Voltage)".*
  VRDLAT, VRDLBT and VRHYS are referred to “9.1.4.12 Low Voltage Detection (Internal Voltage)".
  VOH7, VIL9 and VIH9 are referred to "9.1.3 DC Characteristics".
  t_{RV12}, $t_{FV12RST}$ and $t_{RV12RST}$ are referred to “9.1.4.19 Power and Reset Sequence".

**1: Battery Disconnect: All supplies fall together.*

**2: VCC12 can be fully depleted or not full depleted.*

**3: DVCC, VCC53 and VCC3 can start before or after VCC12.*

**4: VCC5 is higher than level detection voltage: VDLAT+VHYS*
VCC5 is lower than level detection voltage: VDLBT+VHYS
VDLAT, VDLBT and VHYS are referred to "9.1.4.11 Low Voltage Detection (External Voltage)".

**5: VCC5 is higher than level detection voltage: VRDLAT+VRHYS*
VCC5 is lower than level detection voltage: VRDLBT+VRHYS
VRDLAT, VRDLBT and VRHYS are referred to "9.1.4.11 Low Voltage Detection (External Voltage)".

Case2-1) "PSC_1 H --> L --> H transition by User Program”

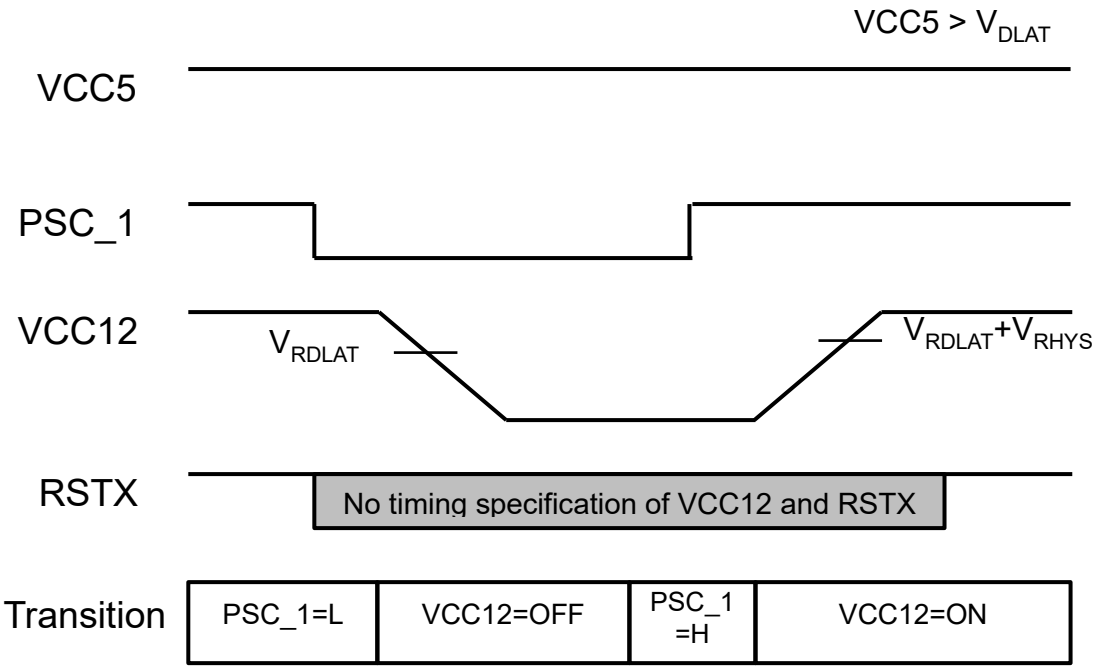

Note:

- *VCC12 controlled by PSC_1.*
- *VCC12 can be fully deplete*

Case2-2) "PSC_1 H --> L --> H transition by User Program"

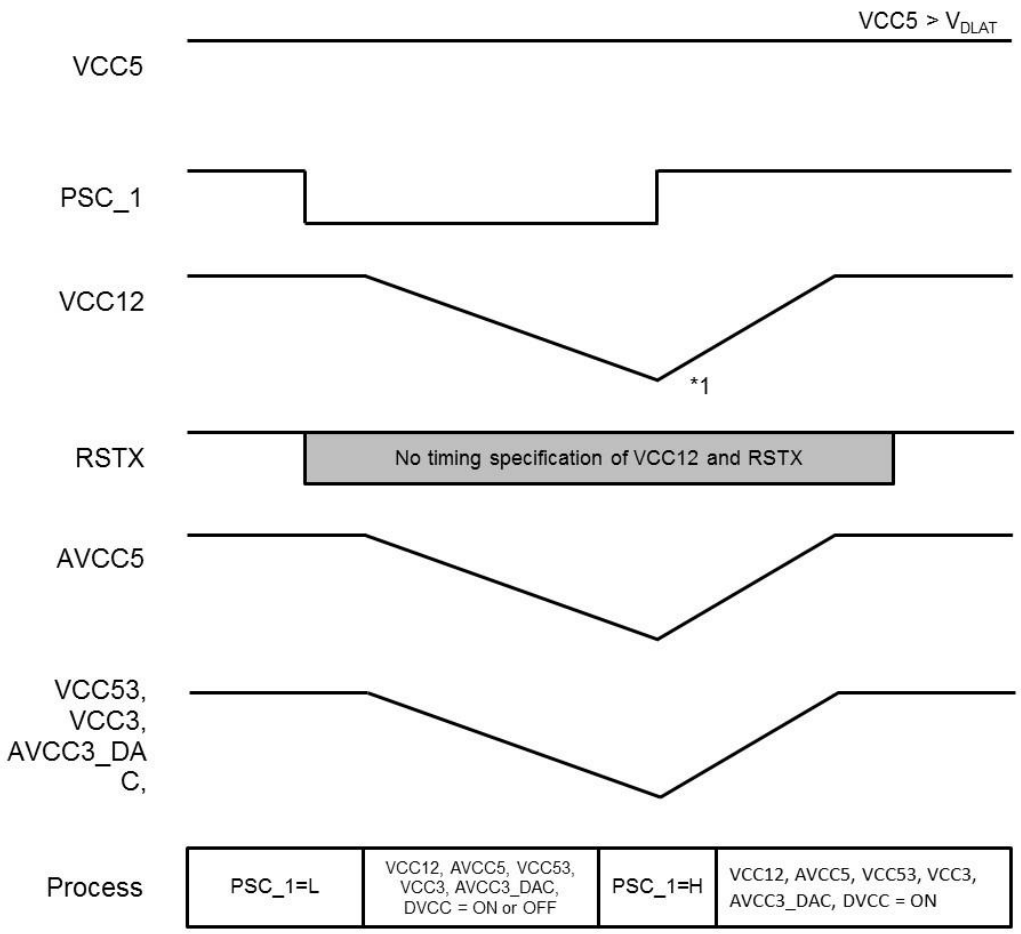

Note:

- *VCC12 and AVCC5 controlled by PSC_1.*
- *VCC53, VCC3, AVCC3_DAC and DVCC controlled by PSC_1. Can be controlled by VCC5 GPIO also.*

**1: VCC12 can be fully depleted or not full depleted.*

VCC12 and RSTX Sequence

(T_A: Recommended operating conditions, VSS = 0.0 V)

Parameter	Symbol	Pin Name	Conditions	Value		Unit	Remarks
				Min	Max		
RSTX -> VCC12 fall interval time	$t_{FV12RST}$	VCC12, RSTX	-	5	-	us	-
VCC12 -> RSTX rise interval time	$t_{RV12RST}$	VCC12, RSTX		35	-	us	-

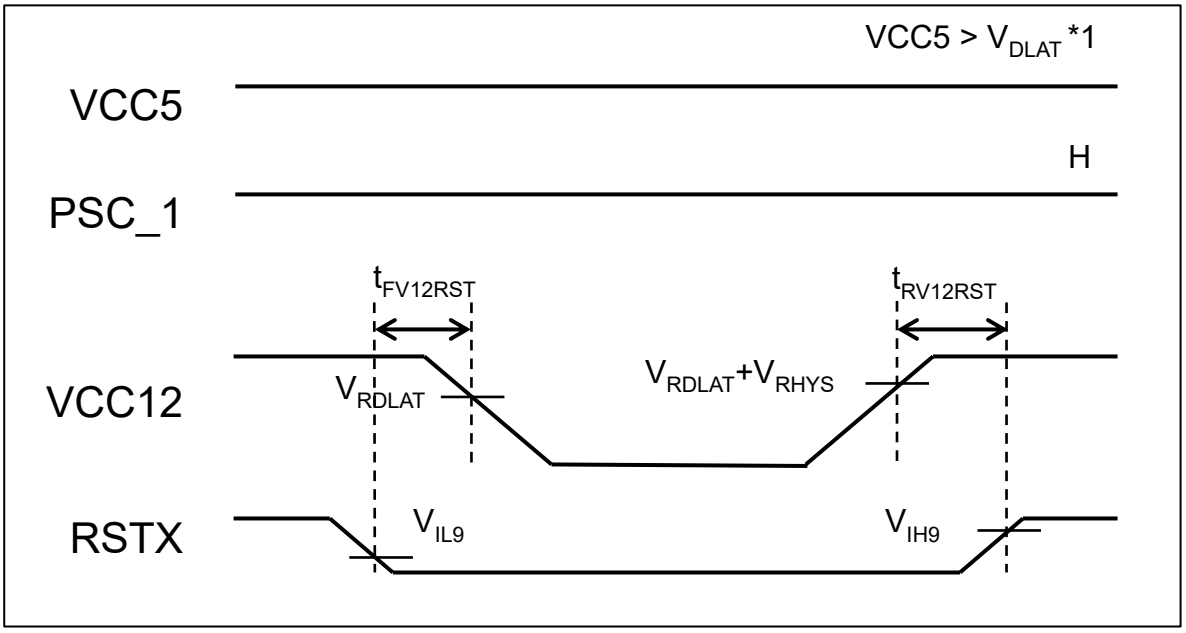

Note:

- *If the sequence given in VCC5 and VCC12 sequence" cannot be applied, this sequence can be applied.*
- *VDLAT VRDLAT, VRDLAT and VRHYS are referred to "9.1.4.11 Low Voltage Detection (External Voltage)". VIL9 and VIH9 is referred to "9.1.3 DC Characteristics".*
- *This sequence is applied in case of VCC12 power on/off and assertion of RSTX is controlled by application.*
- *This sequence is applied under the condition VCC5 > VDLAT and PSC_1 = H.*

RSTX and MODE Sequence

(T_A: Recommended operating conditions, Vcc5 = 5.0 V ± 10 % / 3.3 V ± 0.3V, VSS = 0.0 V)

Parameter	Symbol	Pin Name	Conditions	Value		Unit	Remarks
				Min	Max		
RSTX ↑ -> MODE ↑ delay time	tMOD	RSTX, MODE	-	-5	5	ns	-
Reset and mode input time	tRSTMDL	RSTX, MODE	-	10	-	us	-
Width for reset and mode input removal				1	-	us	-

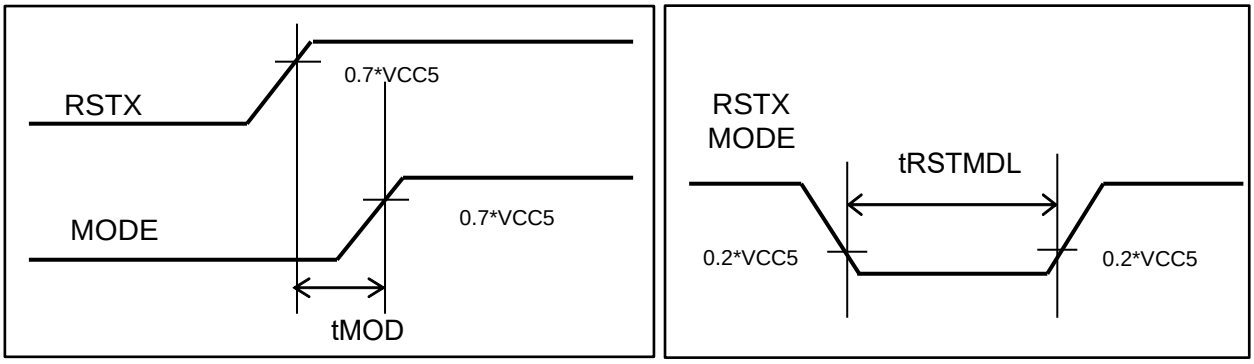

Note:

- *If the sequence given in "VCC5 and VCC12 sequence" and "VCC12 and RSTX Sequence" cannot be applied, this sequence can be applied.*
- *Connect RSTX signal and MODE signal outside of the MCU and shorten the trace length between MCU and these two signal lines.*
- *The following assumptions are made with regard to the workaround described above.*
  1. *After the reset the MCU state is equivalent to the “cold start state” usually reached by power-on-reset.*
  2. *Debugger interface and PC writer interface are not enabled.*
  3. *The RAM retention cannot be guaranteed when applying this workaround*
  4. *Pin PSC_1 will be driven low while RSTX is active (RSTX at low level)*

9.1.5 A/D Converter

9.1.5.1 Electrical Characteristics

(T_A: Recommended operating conditions, $V_{CC}5$ = 5.0 V ± 10 %, $V_{CC}12$ = 1.15 V ± 0.06 V, V_{SS} = AV_{SS} = 0.0 V)

Parameter	Symbol	Pin Name	Conditions			Unit	Remarks
			Min	Typ	Max		
Resolution	-	-	-	-	12	bit	–
Total Error	-	-	-	-	±12 *6	LSB	– *3
			-	-	±15 *7	LSB	–
Integral Non linearity	-	-	-	-	±4.0	LSB	– *4
Differential Non linearity	-	-	-	-	±1.9	LSB	– *4
Zero transition voltage	V_{ZT}	AN0 to AN63	AVRL -11.5LSB *6	-	AVRL +12.5LSB *6	V	– *5
			AVRL -14.5LSB *7	-	AVRL +15.5LSB *7	V	
Full-scale transition voltage	V_{FST}	AN0 to AN63	AVRH -13.5LSB *6	-	AVRH +10.5LSB *6	V	
			AVRH -16.5LSB *7	-	AVRH +13.5LSB *7	V	–
Sampling time	t_{SMP}	-	0.3	-	-	µs	– *1
Compare time	t_{CMP}	-	0.8	-	26	µs	– *1
A/D conversion time	t_{CNV}	-	1. 1	-	-	µs	– *1
Resumption Time	-	-	-	-	1	µs	–
Analog port input current	I_{AIN}	AN0 to AN30, AN32 to AN38	-1.0	-	1.0	µA	AV_{SS}≤ – V_{AIN}≤$AV_{CC}5$
		AN31, AN39 to AN63	-2.0	-	2.0	µA	
Analog input voltage	V_{AIN}	AN0 to AN63	AVRL	-	AVRH	V	–
Reference voltage	AVRH	AVRH5	4.5 *6	-	5.5 *6	V	– AVcc5 ≥ AVRH
			3.0 *7	-	3.6 *7		
	AVRL	AVRL5/AVSS	-	0.0	-	V	–
Power supply current	I_A	AVCC5	-	500	900(Target)	µA	– 1unit
	I_{AH}		-	1.0	200(Target)	µA	– *2
	I_R	AVRH5	-	1.0	3.5(Target) *6	mA	– 1unit
			-	1.0	2.5(Target) *7	mA	– 1unit
	I_{RH}		-	-	9.0(Target)	µA	– *2
Variation between channels	-	AN0 to AN63	-	-	4.0	LSB	–

*1: Time per channel

*2: Definition of the power supply current (when Vcc5 = AVcc5 = 5.0 V) while the A/D converter is not operating and in stop mode

*3: Total Error is a comprehensive static error that includes the linearity after trimming by software. 1LSB = (AVRH-AVRL)/4096

*4: 1LSB = (VFST-VZT)/4094

*5: 1LSB = (AVRH-AVRL)/4096

*6: For S6J335xxSx or S6J335xxUx or S6J335xxTx or S6J335xxVx option.

*7: For S6J335xxAx or S6J335xxBx or S6J335xxCx or S6J335xxDx or S6J335xxEx or S6J335xxFx or S6J335xxGx or S6J335xxHx option.

9.1.5.2 Notes on A/D converters

About the Output Impedance of an External Circuit for Analog Input

When the external impedance is too high, the analog voltage sampling time may become insufficient. In this case, we recommend attaching a capacitor (about 0.1 µF) to an analog input pin.

Analog input circuit model

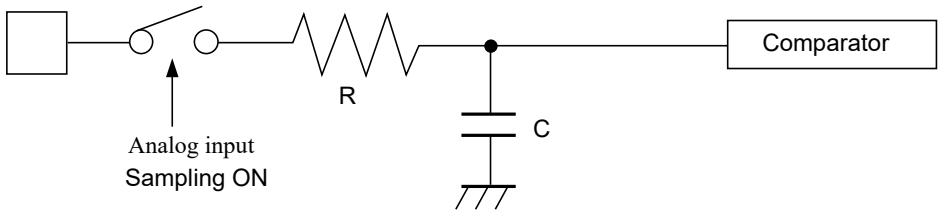

R	C		
12-bit A/D	3.9 kiloohms (max)	11.0 pF (max)	(4.5 V ≤ $AV_{CC}5$ ≤ 5.5 V)

Note: Use the numerical values provided here simply as a guide.

9.1.5.3 Glossary

Resolution: Analog change that can be identified by an A/D converter

Integral linearity error: Deviation of the straight line connecting the zero transition point ("0000 0000 0000" <--> "0000 0000 0001") and full-scale transition point ("1111 1111 1110" <--> "1111 1111 1111") from actual conversion characteristics

includes zero transition error, full-scale transition error, and non linearity error.

Differential linearity error: Deviation from the ideal value of the input voltage required for changing the output code by 1 LSB

Total error: Difference between the actual value and the theoretical value. The total error

Total error

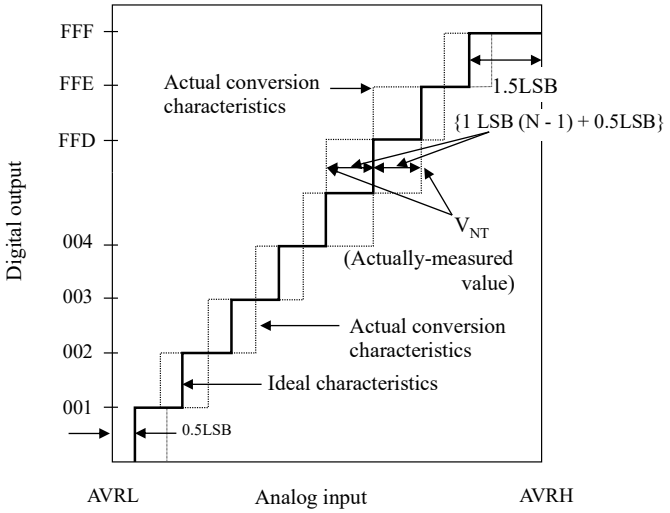

$$\text{Total error of digital output N} = \frac{V_{NT} - \{1\text{ LSB} \times (N-1) + 0.5\text{LSB}\}}{1\text{LSB}} \text{ [LSB]}$$

$$1\text{LSB(Ideal value)} = \frac{AVRH - AVRL}{4096} \text{ [V]}$$

N: A/D converter digital output value.

V_{ZT}(Ideal value) = AVRL + 0.5LSB[V]

V_{FST}(Ideal value) = AVRH - 1.5LSB[V]

V_{NT}: Voltage at which the digital output changes from "(N – 1)" to "N".

Integral linearity error

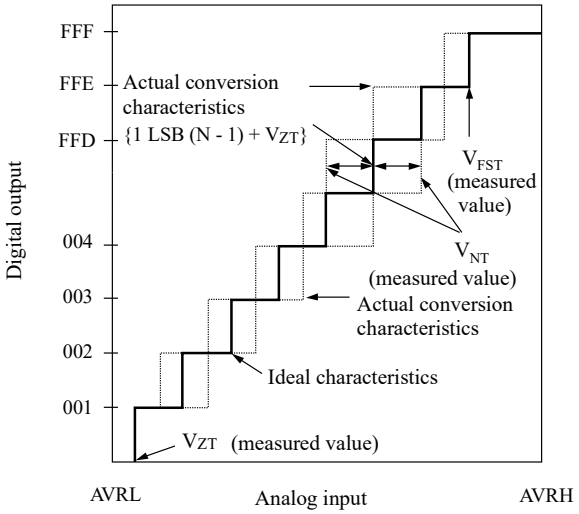

Differential linearity error

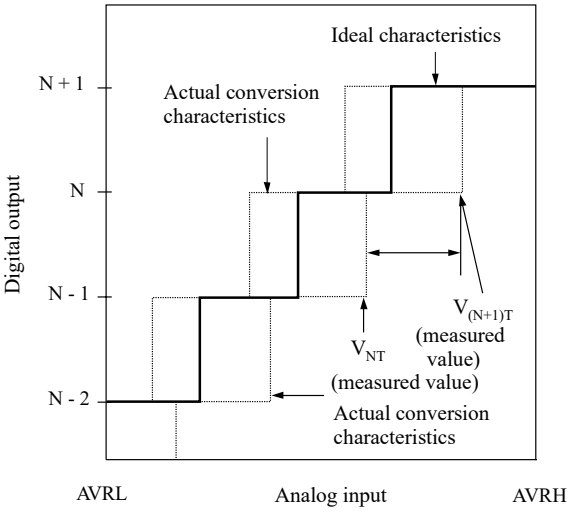

$$\text{Integral linearity error of digital output N} = \frac{V_{NT} - \{1\ \text{LSB} \times (N-1) + V_{ZT}\}}{1\text{LSB}}\ [\text{LSB}]$$

$$\text{Differential linearity error of digital output N} = \frac{V_{(N+1)T} - V_{NT}}{1\text{LSB}} - 1\ \text{LSB}\ [\text{LSB}]$$

$$1\text{LSB} = \frac{V_{FST} - V_{ZT}}{4094}\ [\text{V}]$$

V_{ZT}: Voltage for which digital output changes from "0x000" to "0x001"

V_{FST}: Voltage for which digital output changes from "0xFFE" to "0xFFF".

9.1.6 FLASH Memory

9.1.6.1 Electrical Characteristics

Parameter	Rating			Unit	Remarks
	Min	Typ	Max		
Sector erase time	-	120	180	ms	Large sector*1 Internal preprogramming time included
	-	120	180	ms	8kB sector*1 Internal preprogramming time included
	-	120	180	ms	4kB sector*2 Internal preprogramming time included
16bit write time(Program)	-	30	60	µs	System-level overhead time excluded*1
32bit write time(Program)	-	30	60	µs	System-level overhead time excluded*1
64bit write time(Program)	-	30	60	µs	System-level overhead time excluded*1
256bit write time(Program)	-	40	70	µs	System-level overhead time excluded*1
Page mode write time(Program)	-	320	600	µs	System-level overhead time excluded*1
32bit write time(Work)	-	30	60	µs	System-level overhead time excluded*2
Erase count / Data retention time(Program)	1,000/20 years	-	-	-	Temperature at write/erase time Average temperature T_A = +85 degrees Celsius
Erase count / Data retention time(Work)	1,000/20 years 10,000/10 years 100,000/5 years	-	-	-	Temperature at write/erase time Average temperature T_A = +85 degrees Celsius

*1: Guaranteed value for up to 1,000 erases

*2: Guaranteed value for up to 100,000 erases

9.1.6.2 Notes

While the Flash memory is written or erased, shutdown of the external power (Vcc5) is prohibited.

In the application system where Vcc5 might be shut down while writing or erasing, be sure to turn the power off by using an external voltage detection function.

To put it concretely, after the external power supply voltage falls below the detection voltage (V_{DL}), hold Vcc5 at 2.7V or more within the duration calculated by the following expression:

Td*1 [µs] + (1 / F_{CRF}*2[MHz]) x 1029 + 25 [µs]

*1: See "9.1.4.11 Low Voltage Detection (External Voltage)"

*2: See "9.1.4.1 Source Clock Timing"

10. Acronyms

Acronym	Description
A/D converter	Analog digital converter
ADC	Analog digital converter
AHB	Advanced high performance bus
AMBATM	Advanced microcontroller bus architecture
APB	Advanced peripheral bus
ATCM	TCM-A port
AXI	Advanced extensible interface
B0TCM	TCM B0 port
B1TCM	TCM B1 port
BBU	Bit banding unit
BDR	Boot description record
BTL	Bridge-tied load
CAN	Control are network
CD	Clock domain
CPU	Central processing unit
CR	CR Oscillator
CRC	Cyclic redundancy check
CSV	Clock supervisor
DAC	Digital analog converter
DAP	Debug access port
DED	Dual error detection
DMA	Direct memory access
DMAC	DMA controller
EAM	Exclusive access memory
ECC	Error correction code
ETM	Embedded trace macro
EXT-IRC	External interrupt controller
FIQ	Fast interrupt request
FPU	Floating point unit
FRT	Free run timer
GPIO	General purpose I/O
HPM	High performance matrix
HW-WDT	Hardware watchdog timer
I/O	Input or output
I2S	Inter-IC sound
ICU	Input capture unit
IPCU	Inter-processor communication unit
IRC	Interrupt controller
IRQ	Interrupt request
ISR	Interrupt service routine
JTAG	Joint test action group

Acronym	Description
LLPP	Low latency peripheral port
LVD	Low voltage detector
MCU	Microcontroller unit
MFS	Multi-function serial interface
NF	Noise filter
NMI	Non maskable interrupt
OCU	Output compare unit
OSC	Oscillator
PCM	Pulse coded module
PLL	Phase locked loop
PONR	Power on reset
PPC	Port pin configuration
PSS	Power saving state
PWM	Pulse width modulation
RAM	Random access memory
RIC	Resource input configuration
ROM	Read only memory
RTC	Real time clock
RVD	Low voltage detection and reset for RAM retention
SCT	Source clock timer
SEC	Single error correction
SECDED	Single error correction and dual error detection
SHE	Secure Hardware Extension
SMC	Stepper motor controller
SMIX	Sound mixer
SRAM	Static RAM
SWFG	Sound waveform generator
SW-WDT	Software watchdog timer
SYSC	System controller
TCFLASH	FLASH connected to TCM
TCM	Tightly coupled memory
TCRAM	RAM connected to TCM
TPU	Timing protection unit
UDC	Up-down counter
VIC	Vectored interrupt controller
VRAM	Video RAM
WDR	Watchdog description record
WDT	Watchdog timer
WFG	Waveform generator
WorkFLASH	Work FLASH memory

11. Ordering Information

Part Number *1	Package
S6J335EKSCSE2000A	208-pin plastic TEQFP(LEW208)
S6J335EKSESE20000	
S6J335EKBESE20000	
S6J335EJBESE20000	176-pin plastic TEQFP(LEV176)

12. Errata

This section describes the errata for the S6J3350 Series. Details include errata trigger conditions, scope of impact, available workarounds, and silicon revision applicability. Contact your local Cypress Sales Representative if you have questions.

Part Numbers Affected

Part Number
S6J335Dxxx S6J335Exxx

S6J335 Qualification Status

Product Status: Production

Errata Summary

The following table defines the errata applicability to available S6J3350 Series devices.

Items	Part Number	Fix Status
1. MCAN wrong message transmission	S6J335Dxxx S6J335Exxx	No silicon fix planned.
2. CAN FD controller message order inversion when transmitting from dedicated Tx Buffers configured with same Message ID		
3. CAN FD incomplete description of Dedicated Tx Buffers and Tx Queue related to transmission from multiple buffers configured with the same Message ID		

1. MCAN wrong message transmission

■ Problem Definition

There is a possibility a message with an ID (arbitration field) and a format and DLC (control field) is transmitted which was not configured by the application. The message itself is syntactically correct and can be received by other nodes.

The occurrence of the limitation requires a certain relationship in time between a transmission request for sending a message and the coincidence of noise in the 3rd bit of intermission field which is treated as the start of new message transmission (SoF).

■ Trigger Condition

Under the following conditions a message with wrong ID, format and DLC is transmitted:

- M_CAN is in state "Receiver" (PSR.ACT = "10"), no pending transmission.
- A new transmission is requested after sample point of 2nd bit of intermission but before the 3rd bit of Intermission is reached.
- The CAN bus is sampled dominant at the third bit of Intermission which is treated as SoF (see ISO11898-1:2015 Section 10.4.2.2).

■ Scope of Impact

Under the conditions listed above it may happen, that:

- The shift register is not loaded with ID, format, and DLC of the requested message.

- The M_CAN will start arbitration with wrong ID, format, and DLC.
- In case the ID won arbitration, a CAN message with valid CRC is transmitted.
- In case this message is acknowledged, the ID stored in the Tx Event FIFO is the ID of the requested Tx message and not the ID of the message transmitted on the CAN bus
- Neither an error is detected by the transmitting node nor at the receiving node.

■ Workaround

Workaround 1:

This workaround avoids submitting a transmission request in the critical time window of about one bit time before the sample point of the 3rd bit of intermission field when on other pending transmission request exists:

- Request a new transmission if another transmission is already pending or when the M_CAN / M_TTCAN is not in state "Receiver" (when PSR.ACT ≠ "10").
- If no pending transmission request exists, the application software needs to evaluate the Rx Interrupt flags IR.DRX, IR.RF0N, IR.RF1N which are set at the last bit of EoF when a received and accepted message gets valid.
- A new transmission may be requested by writing to TXBAR once the Rx interrupt occurred and the application waited another 3 bit times before submitting its Tx request. Note the Rx interrupt is generated at the last bit of EoF which is followed by three bits of Intermission.
- The application has to take care that the transmission request for the CAN Protocol Controller is activated before the critical window of the following reception is reached.

A supplemental action can be applied in order to detect messages which contain wrong ID and control filed information:

- A checksum covering arbitration and control fields can be added to the data field of the message to be transmitted, to detect frames transmitted with wrong arbitration and control fields.

Workaround 2:

This workaround ensures that always at least one pending Tx request exists. If that is the case, the application may launch its Tx requests at any time without suffering from the limitation.

- Define a low priority message with DLC = 0 that can be sent without harm. E.g. loses arbitration against all other application messages, does not pass any acceptance filter of nodes in the same network. DLC = 0 shall reduce latency for other application messages.
- Configure sufficient Tx buffers – at least two - for this message type thus that there is always another one waiting to be sent. E.g. an application that cannot react quickly enough with the time a single message of this type is sent, more than 2 Tx buffer may become necessary.
- The application uses the standard interfaces of the CAN / CAN FD stack to feed these messages.
- Whenever Tx confirmation is indicated for the second but last message of this type with pending Tx request, the application needs to submit at least one new Tx request. Note Tx confirmation is a standard feature in the AUTOSAR SW architecture.
- Before initially leaving INIT state of the M_CAN IP by clearing CCCR.INIT bit, make sure to activate a Tx request after having cleared CCCR.CCE. This will ensure that the conditions for the occurrence of the limitation when synchronizing to the CAN bus the first time after RESET are prevented.

■ Fix Status

Not be planned.

2. CAN FD controller message order inversion when transmitting from dedicated Tx Buffers configured with same Message ID

■ Problem Definition

CAN FD controller message order inversion when multiple Tx Buffers that are configured with the same Message ID have pending Tx requests.

■ Configuration

Several Tx Buffers are configured with the same Message ID. Transmission of these Tx Buffers is requested sequentially with a delay between the individual Tx requests.

■ Expected behavior

When multiple Tx Buffers that are configured with the same Message ID have pending Tx requests, they shall be transmitted in ascending order of their Tx Buffer numbers. The Tx Buffer with lowest buffer number and pending Tx request is transmitted first.

■ Observed behavior

It may happen, depending on the delay between the individual Tx requests, that where multiple Tx Buffers are configured with the same Message ID the Tx Buffers are not transmitted in order of the Tx Buffer number (lowest number first).

■ Workaround

First, write the group of Tx messages with the same Message ID to the Message RAM and then request transmission of all these messages concurrently by a single write access to TXBAR. Before requesting a group of Tx messages with this Message ID, ensure that no message with this Message ID has a pending Tx request.

Applications not able to use the above workaround can implement a counter within the data section of their messages sent with same ID in order to allow the recipients to determine the correct sending sequence.

■ Fix Status

Not be planned

3. CAN FD incomplete description of Dedicated Tx Buffers and Tx Queue related to transmission from multiple buffers configured with the same Message ID

■ Problem Definition

There was an incomplete description related to transmission from multiple buffers configured with the same Message ID in Section 3.5.2 Dedicated Tx Buffers and Section 3.5.4 Tx Queue of the Hardware Manual.

■ Detailed explanation

The following is the updated description in Section 3.5.2 Dedicated Tx Buffers and Section 3.5.4 Tx Queue of the Hardware Manual.

Section 3.5.2 Dedicated Tx Buffers:
- Original content in the Hardware Manual:
In case that multiple Tx Buffers are configured with the same Message ID, the Tx Buffer with the lowest buffer number is transmitted first.

- Enhancement:
These Tx buffers shall be requested in ascending order with the lowest buffer number first. Alternatively, all Tx buffers configured with the same Message ID can be requested simultaneously by a single write access to TXBAR.

Section 3.5.4 Tx Queue:
- Original content in the Hardware Manual:

In case that multiple Queue Buffers are configured with the same Message ID, the Queue Buffer with the lowest buffer number is transmitted first.

- Replacement:
In case that multiple Tx Queue buffers are configured with the same Message ID, the transmission order depends on the numbers of the buffers where the messages were stored for transmission. As these buffer numbers depend on the then current states of the PUT index, a prediction of the transmission order is not possible.

- Original content in the Hardware Manual:
An Add Request cyclically increments the Put Index to the next free Tx Buffer.

- Replacement:

The Put Index always points to that free buffer of the Tx Queue with the lowest buffer number.

■ Workaround

In case a defined order of transmission is required, the Tx FIFO shall be used for transmission of messages with the same Message ID. Alternatively dedicated Tx buffers with the same Message ID shall be requested in ascending order with the lowest buffer number first or by a single write access to TXBAR. Alternatively, a single Tx Buffer can be used to transmit those messages one after the other.

■ Fix Status

No silicon fix planned. Use workaround.

Hardware Manual will be updated accordingly.

13. Appendix

13.1 Application 1: JTAG Tool Connection

This is an application example of JTAG tool connection. See the relevant application note 002-03898 in detail.

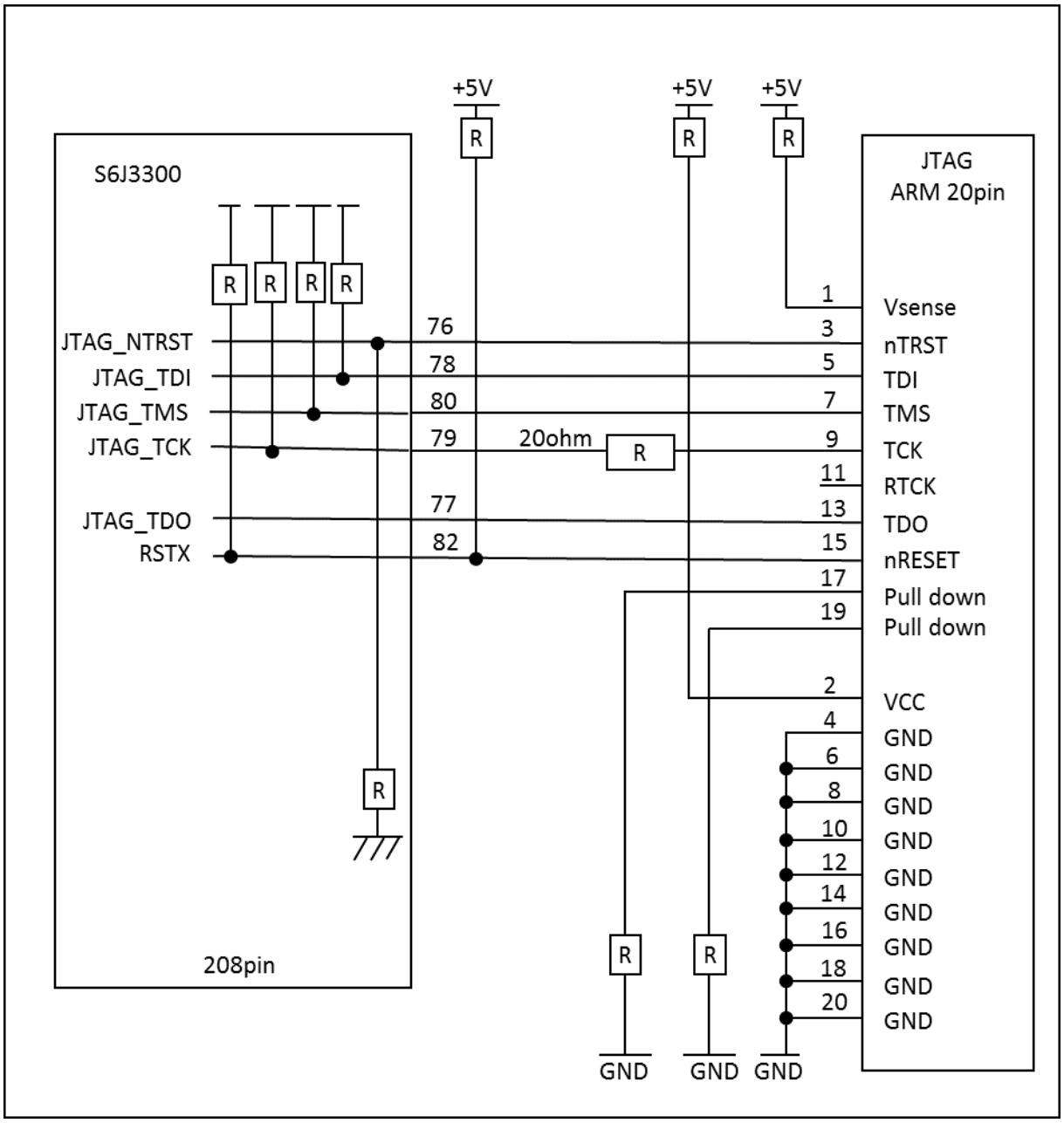

14. Major Changes

Page	Section	Change Results
Rev.*A		
7	2.Function List 2.2Optional function	Revised Chip ID and Revision as below: Error) Function Digit Revision Chip ID S,U,T,V B 0x10120000 A,C,E,G B 0x1012A000 B,D,F,H B 0x10122000 Correct) Function Digit Revision S,U,T,V C 0x10122100 A,C,E,G C 0x10128100 B,D,F,H C 0x10120100
10	3.Product Description 3.2Product description	Revised 4 MHz to 16 MHz as below: Error) −A wide range of 3.6 - 4 MHz is available for main oscillator Correct) −A wide range of 3.6 - 16 MHz is available for main oscillator
13	3. Product Description 3.2 Product description	Added Note of a function as below: Multi-Functional Serial (MFS) Correct) CTS/RTS is not mounted (hardware flow control is not supported for this series.)
16 30 32 38	4.1 Pin Assignment 4.1.2 TEQFP-176 Pin Assignment P32, P38 6. Port Description 6.1 Port description list	Deleted 176Pin Function as below: Error) 176Pin Function PPG22_TOUT0_0, 70 PPG22_TOUT2_0, 71 PPG16/17/18/19/20/21_TIN1_0, 69 RX7_1, 174 TX7_1, 175 Correct) 176Pin Function PPG22_TOUT0_0, - PPG22_TOUT2_0, - PPG16/17/18/19/20/21_TIN1_0, - RX7_1, - TX7_1, -
30	6. Port Description 6.1 Port description list	Deleted 144Pin Function as below: Error) 144Pin Function RX7_1, 142 TX7_1, 143 Correct) 144Pin Function RX7_1, - TX7_1, -

Page	Section	Change Results
161	8.Precautions and Handling Devices 8.1.1Precautions for Product Design	Revised as below: Error) (1) Preventing Over-Voltage and Over-Current Conditions Exposure to voltage or current levels in excess of maximum ratings at any pin is likely to cause deterioration within the device, and in extreme cases leads to permanent damage of the device. Try to prevent such overvoltage or over-current conditions at the design stage. Correct) (1) Preventing Over-Voltage and Over-Current Conditions Exposure to voltage or current levels in excess of maximum ratings at any pin is likely to cause deterioration within the device and in extreme cases leads to permanent damage of the device. Try to prevent such overvoltage or over-current conditions at the design stage.
162	8.Precautions and Handling Devices 8.1.2Precautions for Package Mounting	Revised as below: Error) Surface Mount Type Correct) **Surface Mount Type**
165	9.Electric Characteristics 9.1.1 Absolute Maximum Rating	Deleted Remarks comment as below: Error) Supply voltage Operation assurance range, DV_{CC}, Remarks "$DV_{CC} \leq V_{CC}5$" Correct) Power supply voltage, DV_{CC}, Remarks ""
165	8.2Handling Devices	Added Note of a function as below: Method to Switch off VCC12 during Power-off Sequence During power-off sequence, it is necessary to switch off VCC12 by driving PSC1 pin low by entering PSS mode (power domain 2 off). If VCC12 needs to be switched off by other means, RSTX needs to be asserted before switching off VCC12 to inactivate the operation of VCC12 supplied domain below the operation assurance range.
165 166	9.Electric Characteristics 9.1.1 Absolute Maximum Rating	Added Note of a comment as below: Maximum clamp current, Total maximum clamp current Correct) *13 VI or VO should never exceed the specified ratings. However, if the maximum current to/from an input is limited by a suitable external resistor, the ICLAMP rating supersedes the VI rating.
167	9.Electric Characteristics 9.1.1 Absolute Maximum Rating	Revised Warning of a comment as below: Error) Note: − Application of stress (e.g., voltage, current, temperature) exceeding the absolute maximum rating may cause damage to the semiconductor device. Therefore, make sure that nothing exceeds the rating. Correct) WARNING: − Semiconductor devices may be permanently damaged by application of stress (including, without limitation, voltage, current or temperature) in excess of absolute maximum ratings. Do not exceed any of these ratings.

Page	Section	Change Results
168	9.Electric Characteristics 9.1.2Recommended operating condition	Revised Rating Min Spec as below: Error) Power supply voltage, $V_{CC}5$, Rating, Min, 2.6 Power supply voltage, $V_{CC}3$, Rating, Min, 2.6 Correct) Power supply voltage, $V_{CC}5$, Rating, Min, 2.7 Power supply voltage, $V_{CC}3$, Rating, Min, 2.7
168 169	9.Electric Characteristics 9.1.2Recommended operating condition	Added comment as below: Supply voltage Operation assurance range,$V_{CC}12$, VCC12 Correct) *5:When the voltage of Vcc12 is in the out of range against supply voltage operation assurance, the operation of circuit which Vcc12 used as the power source becomes unstable status. In that case, the value of each registers including RESCAUSEUR Register cannot be guaranteed, so these flags should don't care by software processing
168 169 221 241	9.Electric Characteristics 9.1.2Recommended operating condition 9.1.4.11Low Voltage Detection (External Voltage) 9.1.5 A/D converter	Revised device revision from B to C as below: Error) S6J335xxSB , S6J335xxUB, S6J335xxTB, S6J335xxVB, S6J335xxBB, S6J335xxDB, S6J335xxFB, S6J335xxHB, S6J335xxAB, S6J335xxCB, S6J335xxEB, S6J335xxGB Correct) S6J335xxSC, S6J335xxUC, S6J335xxTC, S6J335xxVC, S6J335xxBC, S6J335xxDC, S6J335xxFC, S6J335xxHC, S6J335xxAC, S6J335xxCC, S6J335xxEC, S6J335xxGC
173	9.Electric Characteristics 9.1.3 DC characteristics	Delete VOH25 Spec as below: Error) VOH25 Correct) Non
175	9.Electric Characteristics 9.1.3 DC characteristics	Delete VOL25 Spec as below: Error) VOL25 Correct) Non

<table>
<tr><th>Page</th><th>Section</th><th>Change Results</th></tr>
<tr><td>186</td><td>9.Electric Characteristics
9.1.4.5 Power-on Conditions</td><td>Revised as below:
Error)
<table>
<tr><th rowspan="2">Parameter</th><th rowspan="2">Symbol</th><th rowspan="2">Pin Name</th><th rowspan="2">Conditions</th><th colspan="3">Value</th><th rowspan="2">Unit</th><th rowspan="2">Remarks</th></tr>
<tr><th>Min</th><th>Typ</th><th>Max</th></tr>
<tr><td>Power off time</td><td>-</td><td>VCC5</td><td>-</td><td>50</td><td>-</td><td>-</td><td>ms</td><td>*2</td></tr>
<tr><td>Power ramp rate</td><td>dV/dt</td><td>VCC5</td><td>VCC5: 0.2V to 2.6V</td><td>-</td><td>-</td><td>1</td><td>V/µs</td><td>*3</td></tr>
<tr><td>Undetected power ramp rate</td><td>|dV/dt|</td><td>VCC5</td><td>VCC5: Between 2.4V and 4.5V</td><td>-</td><td>-</td><td>50</td><td>mV/µs</td><td>*4</td></tr>
</table>
Correct)
<table>
<tr><th rowspan="2">Parameter</th><th rowspan="2">Symbol</th><th rowspan="2">Pin Name</th><th rowspan="2">Conditions</th><th colspan="3">Value</th><th rowspan="2">Unit</th><th rowspan="2">Remarks</th></tr>
<tr><th>Min</th><th>Typ</th><th>Max</th></tr>
<tr><td>Power off time</td><td>-</td><td>VCC5</td><td>-</td><td>100</td><td>-</td><td>-</td><td>µs</td><td>*2</td></tr>
<tr><td>Power ramp rate</td><td>dV/dt</td><td>VCC5</td><td>VCC5: 1.5V to 2.6V</td><td>-</td><td>-</td><td>1</td><td>V/µs</td><td>*3</td></tr>
<tr><td>Maximum ramp rate guaranteed to not generate power-on reset</td><td>|dV/dt|</td><td>VCC5</td><td>VCC5: Between 2.4V and 4.5V</td><td>-</td><td>-</td><td>50</td><td>mV/µs</td><td>*4</td></tr>
</table></td></tr>
</table>

Page	Section	Change Results
186	9.Electric Characteristics 9.1.4.5 Power-on Conditions	Revised as below: Error) *1: This specification is at 1V/µs of power ramp rate. *2: VCC5 must be held below 0.2V for a minimum period of tOFF. *3: Power ramp rate must be 1V/us or less from 0.2V to 2.6V. Power-on can detect by satisfying power ramp rate when power off time is satisfied. *4: This specification is specified the power supply fluctuation after power on detection. When VCC5 voltage is between 2.4V and 4.5V, the power supply fluctuation is below 50mV/us, the detection of power-on is suppressed. The power-on does not detect in any power fluctuation between 4.5V and 5.5V. ***Notes:*** When using S6J3350, *2 and *3 must be satisfied. When neither *2 nor *3 can be satisfied, assert external reset (RSTX) at power up and any brownout event. • **Power off time, Power ramp rate** 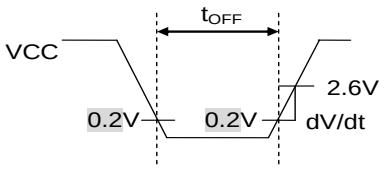 Correct) *1: This specification is at 1V/µs of power ramp rate. *2: VCC5 must be held below 1.5V for a minimum period of t_{OFF}. *3: Power ramp rate must be 1V/us or less from 1.5V to 2.6V. Power-on can detect by satisfying power ramp rate when power off time is satisfied. *4: This specification is specified the power supply fluctuation after power on detection. When VCC5 voltage is between 2.4V and 4.5V, the power supply fluctuation is below 50mV/us, the detection of power-on is suppressed. The power-on does not detect in any power fluctuation between 4.5V and 5.5V. ***Notes:*** When using S6J3350, *2 and *3 must be satisfied. When neither *2 nor *3 can be satisfied, assert external reset (RSTX) at power up and any brownout event. • **Power off time, Power ramp rate** 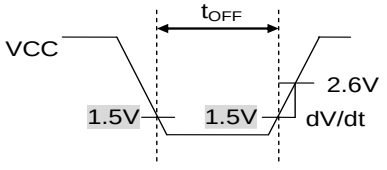

<table>
<tr><th>Page</th><th>Section</th><th>Change Results</th></tr>
<tr><td>221</td><td>9.Electric Characteristics
9.1.4.11 Low Voltage Detection (External Voltage)</td><td>Revised Max of Low-voltage detection time as below:
Low-voltage detection (external low-voltage detection)
Error)
<table>
<tr><td>Low-voltage detection time</td><td>Td</td><td>-</td><td>-</td><td>-</td><td>-</td><td>30</td><td>µs</td><td></td></tr>
</table>
Correct)
<table>
<tr><td>Low-voltage detection time</td><td>Td</td><td>-</td><td>-</td><td>-</td><td>-</td><td>40</td><td>µs</td><td></td></tr>
</table></td></tr>
<tr><td>222</td><td>9.Electric Characteristics
9.1.4.11 Low Voltage Detection (External Voltage)</td><td>Revised as below:
Low-voltage detection (1.15 V power supply low-voltage detection)
Error)
<table>
<tr><th rowspan="2">Parameter</th><th rowspan="2">Symbol</th><th rowspan="2">Pin Name</th><th rowspan="2">Conditions</th><th colspan="3">Value</th><th rowspan="2">Unit</th><th rowspan="2">Remarks</th></tr>
<tr><th>Min</th><th>Typ</th><th>Max</th></tr>
<tr><td rowspan="2">Detection voltage
(after trimming)</td><td rowspan="2">V_{RDLAT}</td><td rowspan="2">VCC12</td><td rowspan="2">*1</td><td>0.784</td><td>0.8125</td><td>0.841</td><td rowspan="2">V</td><td rowspan="2">When power-supply voltage falls Typ±3.5%</td></tr>
<tr><td>0.888</td><td>0.95</td><td>0.984</td></tr>
</table>
Correct)
<table>
<tr><th rowspan="2">Parameter</th><th rowspan="2">Symbol</th><th rowspan="2">Pin Name</th><th rowspan="2">Conditions</th><th colspan="3">Value</th><th rowspan="2">Unit</th><th rowspan="2">Remarks</th></tr>
<tr><th>Min</th><th>Typ</th><th>Max</th></tr>
<tr><td>Detection voltage
(after trimming)</td><td>V_{RDLAT}</td><td>VCC12</td><td>*1</td><td>0.7841</td><td>0.8125</td><td>0.8410</td><td>V</td><td>When power-supply voltage falls Typ±3.5%</td></tr>
</table></td></tr>
<tr><td>223</td><td>9.Electric Characteristics
9.1.4.12Low Voltage Detection (Internal Voltage)</td><td>Revised as below:
Low-voltage detection (internal low-voltage detection for LVDL0)
Error)
<table>
<tr><th rowspan="2">Parameter</th><th rowspan="2">Symbol</th><th rowspan="2">Pin Name</th><th rowspan="2">Conditions</th><th colspan="3">Value</th><th rowspan="2">Unit</th><th rowspan="2">Remarks</th></tr>
<tr><th>Min</th><th>Typ</th><th>Max</th></tr>
<tr><td>Supply voltage range</td><td>V_{RDP5}</td><td>-</td><td>-</td><td>1.05</td><td>-</td><td>1.21</td><td>V</td><td></td></tr>
<tr><td>Hysteresis width</td><td>V_{RHYS}</td><td>-</td><td>-</td><td>-</td><td>100</td><td>-</td><td>mV</td><td>When power-supply voltage rises</td></tr>
</table>
Correct)
<table>
<tr><th rowspan="2">Parameter</th><th rowspan="2">Symbol</th><th rowspan="2">Pin Name</th><th rowspan="2">Conditions</th><th colspan="3">Value</th><th rowspan="2">Unit</th><th rowspan="2">Remarks</th></tr>
<tr><th>Min</th><th>Typ</th><th>Max</th></tr>
<tr><td>Supply voltage range</td><td>V_{RDP5}</td><td>-</td><td>-</td><td>1.05</td><td>-</td><td>1.21</td><td>V</td><td></td></tr>
<tr><td>Hysteresis width</td><td>V_{RHYS}</td><td>-</td><td>-</td><td>-</td><td>75</td><td>-</td><td>mV</td><td>When power-supply voltage rises</td></tr>
</table></td></tr>
</table>

<table>
<tr><th>Page</th><th>Section</th><th>Change Results</th></tr>
<tr><td>224</td><td>9.Electric Characteristics
9.1.4.12Low Voltage Detection (Internal Voltage)</td><td>
Revised as below:
Error)
<table>
<tr><th rowspan="2">Parameter</th><th rowspan="2">Symbol</th><th rowspan="2">Pin Name</th><th rowspan="2">Conditions</th><th colspan="3">Value</th><th rowspan="2">Unit</th><th rowspan="2">Remarks</th></tr>
<tr><th>Min</th><th>Typ</th><th>Max</th></tr>
<tr><td>Supply voltage range</td><td>V_{RDP5}</td><td>-</td><td>-</td><td>1.05</td><td>-</td><td>1.21</td><td>V</td><td></td></tr>
<tr><td>Detection voltage</td><td>V_{RDL}</td><td>-</td><td>*1</td><td>0.75</td><td>0.85</td><td>0.95</td><td>V</td><td>When power-supply voltage falls</td></tr>
<tr><td>Hysteresis width</td><td>V_{RHYS}</td><td>-</td><td>-</td><td>-</td><td>75</td><td>-</td><td>mV</td><td>When power-supply voltage rises</td></tr>
<tr><td>Low-voltage detection time</td><td>TRd</td><td>-</td><td>-</td><td>-</td><td>-</td><td>30</td><td>µs</td><td></td></tr>
</table>
*1: If the power fluctuation time is less than the low-voltage detection time (TRd) and has passed the detection voltage range, the detection may occur or be canceled after the supply voltage has passed the detection voltage range.
Correct)
<table>
<tr><th rowspan="2">Parameter</th><th rowspan="2">Symbol</th><th rowspan="2">Pin Name</th><th rowspan="2">Conditions</th><th colspan="3">Value</th></tr>
<tr><th>Min</th><th>Typ</th><th>Max</th></tr>
<tr><td>Supply voltage range</td><td>V_{RDP5}</td><td>-</td><td>-</td><td>1.05</td><td>-</td><td>1.21</td></tr>
<tr><td>Detection voltage</td><td>V_{RDL}</td><td>-</td><td>*1</td><td>0.75</td><td>0.85</td><td>0.95</td></tr>
<tr><td>Hysteresis width</td><td>V_{RHYS}</td><td>-</td><td>-</td><td>-</td><td>75</td><td>-</td></tr>
<tr><td>Low-voltage detection time</td><td>TRd</td><td>-</td><td>-</td><td>-</td><td>-</td><td>30</td></tr>
</table>
*1: If the power fluctuation time is less than the low-voltage detection time (TRd) and has passed the detection voltage range, the detection may occur or be canceled after the supply voltage has passed the detection voltage range.
*2: This LVD cannot be used to reliably generate a reset before voltage dips below minimum guaranteed MCU operation voltage, as these detection levels are below the minimum guaranteed MCU operation voltage.
*3: After the brown-out event where the voltage level dips below the detection threshold for less than this time, the detection may occur or be canceled.
</td></tr>
</table>

<table>
<tr><th>Page</th><th>Section</th><th>Change Results</th></tr>
<tr><td>224</td><td>9.Electric Characteristics
9.1.4.12Low Voltage Detection (Internal Voltage)</td><td>
Revised as below:
Error)
<table>
<tr><th rowspan="2">Parameter</th><th rowspan="2">Symbol</th><th rowspan="2">Pin Name</th><th rowspan="2">Conditions</th><th colspan="3">Value</th></tr>
<tr><th>Min</th><th>Typ</th><th>Max</th></tr>
<tr><td>Supply voltage range</td><td>V_{RDP5}</td><td>-</td><td>-</td><td>1.05</td><td>-</td><td>1.21</td></tr>
<tr><td>Detection voltage (before trimming)</td><td>V_{RDLBT}</td><td>-</td><td>*1</td><td>0.775</td><td>0.875</td><td>0.975</td></tr>
<tr><td>Detection voltage (after trimming)</td><td>V_{RDLAT}</td><td>-</td><td>*1</td><td>0.844</td><td>0.875</td><td>0.906</td></tr>
<tr><td>Hysteresis width</td><td>V_{RHYS}</td><td>-</td><td>-</td><td>-</td><td>75</td><td>-</td></tr>
<tr><td>Low-voltage detection time</td><td>TRd</td><td>-</td><td>-</td><td>-</td><td>-</td><td>30</td></tr>
</table>
*1: If the power fluctuation time is less than the low-voltage detection time (TRd) and has passed the detection voltage range, the detection may occur or be canceled after the supply voltage has passed the detection voltage range.
Correct)
<table>
<tr><th rowspan="2">Parameter</th><th rowspan="2">Symbol</th><th rowspan="2">Pin Name</th><th rowspan="2">Conditions</th><th colspan="3">Value</th></tr>
<tr><th>Min</th><th>Typ</th><th>Max</th></tr>
<tr><td>Supply voltage range</td><td>V_{RDP5}</td><td>-</td><td>-</td><td>1.05</td><td>-</td><td>1.21</td></tr>
<tr><td>Detection voltage (before trimming)</td><td>V_{RDLBT}</td><td>-</td><td>*1</td><td>0.775</td><td>0.875</td><td>0.975</td></tr>
<tr><td>Detection voltage (after trimming)</td><td>V_{RDLAT}</td><td>-</td><td>*1</td><td>0.844</td><td>0.875</td><td>0.906</td></tr>
<tr><td>Hysteresis width</td><td>V_{RHYS}</td><td>-</td><td>-</td><td>-</td><td>75</td><td>-</td></tr>
<tr><td>Low-voltage detection time</td><td>TRd</td><td>-</td><td>-</td><td>-</td><td>-</td><td>30</td></tr>
</table>
*1: If the power fluctuation time is less than the low-voltage detection time (TRd) and has passed the detection voltage range, the detection may occur or be canceled after the supply voltage has passed the detection voltage range.
*2: This LVD cannot be used to reliably generate a reset before voltage dips below minimum guaranteed MCU operation voltage, as these detection levels are below the minimum guaranteed MCU operation voltage.
*3: After the brown-out event where the voltage level dips below the detection threshold for less than this time, the detection may occur or be canceled.
</td></tr>
</table>

Page	Section	Change Results
229	9.Electric Characteristics 9.1.4.15 DDR-HSSPI	Revised as below: Error) (16-1) DDR-HSSPI Interface Timing (SDR mode)

Parameter	Symbol	Pin Name	Conditions	Value		Unit	Remarks
				Min	Max		
HSSPI clock cycle	t_{cyc}	M_SCLK0	(CL = 20pF, I_{OL}=-10mA, I_{OH}=10mA),	10	-	ns	
M_SCLK↑ -> delayed sample clock↑	t_{spcnt}	-		0	tcyc	ns	
M_SDATA -> delayed sample clock↑ Input setup time	t_{isdata}	M_SDATA0_0-3 M_SDATA1_0-3		3.5	-	ns	
delayed sample clock↑ -> M_SDATA Input hold time	t_{ihdata}	M_SDATA0_0-3 M_SDATA1_0-3		2.0	-	ns	
M_SCLK↑ -> M_SDATA Output delay time	t_{oddata}	M_SDATA0_0-3 M_SDATA1_0-3		-	6.5	ns	t_{cyc} -3.5ns
M_SCLK↑ -> M_SDATA Output hold time	t_{ohdata}	M_SDATA0_0-3 M_SDATA1_0-3		3.5	-	ns	
M_SCLK↑ -> M_SSEL Output delay time	t_{odsel}	M_SSEL0, 1		-	5.5	ns	t_{cyc} -4.5ns
M_SCLK↑ -> M_SSEL Output hold time	t_{ohsel}	M_SSEL0, 1		4.5	-	ns	

Notes: This is Target Spec.

Correct)

(1)DDR-HSSPI Interface Timing (SDR mode)

Parameter	Symbol	Pin Name	Conditions	Value		Unit	Remarks
				Min	Max		
HSSPI clock cycle	t_{cyc}	M_SCLK0	(CL = 20pF, I_{OL}=-10mA, I_{OH}=10mA),	10	-	ns	
				20	-		when Quad Page Program
M_SCLK↑ -> delayed sample clock↑	t_{spcnt}	-		0	31.5	ns	
M_SDATA -> M_SLCK↑ Input setup time	t_{isdata}	M_SDATA0_0-3 M_SDATA1_0-3		*1	-	ns	
M_SCLK↑ -> M_SDATA Input hold time	t_{ihdata}	M_SDATA0_0-3 M_SDATA1_0-3		*1	-	ns	
M_SCLK↑ -> M_SDATA Output delay time	t_{oddata}	M_SDATA0_0-3 M_SDATA1_0-3		-	t_{cyc}/2 + 2	ns	
M_SCLK↑ -> M_SDATA Output hold time	t_{ohdata}	M_SDATA0_0-3 M_SDATA1_0-3		t_{cyc}/2 - 3	-	ns	
M_SCLK↑ -> M_SSEL Output delay time	t_{odsel}	M_SSEL0, 1		-12.00+ (SS2CD+0.5)* t_{cyc}	-	ns	
M_SCLK↑ -> M_SSEL Output hold time	t_{ohsel}	M_SSEL0, 1		t_{cyc} - 2	-	ns	

Notes: This is Target Spec.

- *SS2CD [1:0] should be configured as 01, 10, or 11.*
- *For *1, the delay of the delay sample clock can be configured (DLP function)..*

<table>
<tr><th>Page</th><th>Section</th><th>Change Results</th></tr>
<tr><td>231</td><td>9.Electric Characteristics
9.1.4.15 DDR-HSSPI</td><td>
Revised as below:
Error)
(16-2) DDR-HSSPI Interface Timing (DDR mode)
<table>
<tr><th rowspan="2">Parameter</th><th rowspan="2">Symbol</th><th rowspan="2">Pin Name</th><th rowspan="2">Conditions</th><th colspan="2">Value</th><th rowspan="2">Unit</th><th rowspan="2">Remarks</th></tr>
<tr><th>Min</th><th>Max</th></tr>
<tr><td>HSSPI clock cycle</td><td>t_{cyc}</td><td>M_SCLK0</td><td rowspan="8">(CL = 20pF,
I_{OL}=-10mA,
I_{OH}=10mA),</td><td>10</td><td>-</td><td>ns</td><td></td></tr>
<tr><td>M_SCLK↑ ->
delayed sample clock↑</td><td>t_{spcnt}</td><td></td><td>0</td><td>tcyc</td><td>ns</td><td></td></tr>
<tr><td>M_SDATA -> delayed sample clock↑
Input setup time</td><td>t_{isdata}</td><td>M_SDATA0_0-3
M_SDATA1_0-3</td><td>1.0</td><td>-</td><td>ns</td><td></td></tr>
<tr><td>delayed sample clock↑
-> M_SDATA
Input hold time</td><td>t_{ihdata}</td><td>M_SDATA0_0-3
M_SDATA1_0-3</td><td>1.0</td><td>-</td><td>ns</td><td></td></tr>
<tr><td>M_SCLK↑ ->
M_SDATA
Output delay time</td><td>t_{oddata}</td><td>M_SDATA0_0-3
M_SDATA1_0-3</td><td>-</td><td>3.5</td><td>ns</td><td>t_{cyc}/2-1.5ns</td></tr>
<tr><td>M_SCLK↑ ->
M_SDATA
Output hold time</td><td>t_{ohdata}</td><td>M_SDATA0_0-3
M_SDATA1_0-3</td><td>1.5</td><td>-</td><td>ns</td><td></td></tr>
<tr><td>M_SCLK↑ -> M_SSEL
Output delay time</td><td>t_{odsel}</td><td>M_SSEL0, 1</td><td>-</td><td>7.0</td><td>ns</td><td>t_{cyc} -3.0ns</td></tr>
<tr><td>M_SCLK↑ -> M_SSEL
Output hold time</td><td>t_{ohsel}</td><td>M_SSEL0, 1</td><td>3.0</td><td>-</td><td>ns</td><td></td></tr>
</table>
Notes: This is Target Spec.

Correct)
(2)DDR-HSSPI Interface Timing (DDR mode)
<table>
<tr><th rowspan="2">Parameter</th><th rowspan="2">Symbol</th><th rowspan="2">Pin Name</th><th rowspan="2">Conditions</th><th colspan="2">Value</th><th rowspan="2">Unit</th><th rowspan="2">Remarks</th></tr>
<tr><th>Min</th><th>Max</th></tr>
<tr><td>HSSPI clock cycle</td><td>t_{cyc}</td><td>M_SCLK0</td><td rowspan="8">(CL = 20pF,
I_{OL}=-10mA,
I_{OH}=10mA),</td><td>12.5</td><td>-</td><td>ns</td><td></td></tr>
<tr><td>M_SCLK↑ ->
delayed sample clock↑</td><td>t_{spcnt}</td><td></td><td>0</td><td>31.5</td><td>ns</td><td></td></tr>
<tr><td>M_SDATA -> M_SLCK↑
Input setup time</td><td>t_{isdata}</td><td>M_SDATA0_0-3
M_SDATA1_0-3</td><td>*1</td><td>-</td><td>ns</td><td></td></tr>
<tr><td>M_SLCK↑ -> M_SDATA
Input hold time</td><td>t_{ihdata}</td><td>M_SDATA0_0-3
M_SDATA1_0-3</td><td>*1</td><td>-</td><td>ns</td><td></td></tr>
<tr><td>M_SCLK↑ -> M_SDATA
Output delay time</td><td>t_{oddata}</td><td>M_SDATA0_0-3
M_SDATA1_0-3</td><td>-</td><td>t_{cyc}/4 +
1.5</td><td>ns</td><td></td></tr>
<tr><td>M_SCLK↑ -> M_SDATA
Output hold time</td><td>t_{ohdata}</td><td>M_SDATA0_0-3
M_SDATA1_0-3</td><td>Tcyc/4 - 1.0</td><td>-</td><td>ns</td><td></td></tr>
<tr><td>M_SCLK↑ -> M_SSEL
Output delay time</td><td>t_{odsel}</td><td>M_SSEL0, 1</td><td>-15.75+
(SS2CD+0.5)*t_{cyc}</td><td>-</td><td>ns</td><td></td></tr>
<tr><td>M_SCLK↑ -> M_SSEL
Output hold time</td><td>t_{ohsel}</td><td>M_SSEL0, 1</td><td>0.75*t_{cyc} - 2.0</td><td>-</td><td>ns</td><td></td></tr>
</table>
Notes: This is Target Spec.
– SS2CD [1:0] should be configured as 01, 10, or 11.
– For *1, the delay of the delay sample clock can be configured (DLP function)
</td></tr>
</table>

<table>
<tr><th>Page</th><th>Section</th><th>Change Results</th></tr>
<tr><td>233</td><td>9.Electric Characteristics
9.1.4.16 Hyper BUS</td><td>
Revised as below:
Error)
(16-1) Hyper Bus Write Timing (HyperFlash)
<table>
<tr><th rowspan="2">Parameter</th><th rowspan="2">Symbol</th><th rowspan="2">Pin Name</th><th rowspan="2">Conditions</th><th colspan="2">Value</th><th rowspan="2">Unit</th><th rowspan="2">Remarks</th></tr>
<tr><th>Min</th><th>Max</th></tr>
<tr><td>CS↑↓ -> CK↑
Chip Select setup time</td><td>t_{CSS}</td><td>M_CS#_1,2</td><td rowspan="2">(CL = 20pF,
IOL=-10mA,
IOH=10mA),</td><td>3.0</td><td>-</td><td>ns</td><td></td></tr>
<tr><td>CK↓ -> CS↑
Chip select hold time</td><td>t_{CSH}</td><td>M_CS#_1,2</td><td>0</td><td>-</td><td>ns</td><td></td></tr>
</table>
Correct)
(1)Hyper Bus Write Timing (HyperFlash)
<table>
<tr><th rowspan="2">Parameter</th><th rowspan="2">Symbol</th><th rowspan="2">Pin Name</th><th rowspan="2">Conditions</th><th colspan="2">Value</th><th rowspan="2">Unit</th><th rowspan="2">Remarks</th></tr>
<tr><th>Min</th><th>Max</th></tr>
<tr><td>CS↑↓ -> CK↑
Chip Select setup time</td><td>t_{CSS}</td><td>M_CS#_1,2</td><td rowspan="2">(CL = 20pF,
IOL=-10mA,
IOH=10mA),</td><td>t_{CKCYC} -2.0</td><td>-</td><td>ns</td><td></td></tr>
<tr><td>CK↓ -> CS↑
Chip select hold time</td><td>t_{CSH}</td><td>M_CS#_1,2</td><td>t_{CKCYC}/2</td><td>-</td><td>ns</td><td></td></tr>
</table>
</td></tr>
<tr><td>234</td><td>9.Electric Characteristics
9.1.4.16 Hyper BUS</td><td>
Revised as below:
Error)
(16-2) Hyper Bus Write Timing (HyperRAM)
<table>
<tr><th rowspan="2">Parameter</th><th rowspan="2">Symbol</th><th rowspan="2">Pin Name</th><th rowspan="2">Conditions</th><th colspan="2">Value</th><th rowspan="2">Unit</th><th rowspan="2">Remarks</th></tr>
<tr><th>Min</th><th>Max</th></tr>
<tr><td>CS↑↓ -> CK↑
Chip Select setup time</td><td>t_{CSS}</td><td>M_CS#_1,2</td><td rowspan="3">(CL = 20pF,
I_{OL}=-10mA,
I_{OH}=10mA),</td><td>3.0</td><td>-</td><td>ns</td><td></td></tr>
<tr><td>CK↓ -> CS↑
Chip select hold time</td><td>t_{CSH}</td><td>M_CS#_1,2</td><td>0</td><td>-</td><td>ns</td><td></td></tr>
<tr><td>RWDS↓-> CK↓
Data Mask Valid</td><td>t_{DMV}</td><td>M_RWDS</td><td>0</td><td>-</td><td>ns</td><td></td></tr>
</table>
Correct)
(2) Hyper Bus Write Timing (HyperRAM)
<table>
<tr><th rowspan="2">Parameter</th><th rowspan="2">Symbol</th><th rowspan="2">Pin Name</th><th rowspan="2">Conditions</th><th colspan="2">Value</th><th rowspan="2">Unit</th><th rowspan="2">Remarks</th></tr>
<tr><th>Min</th><th>Max</th></tr>
<tr><td>CS↑↓ -> CK↑
Chip Select setup time</td><td>t_{CSS}</td><td>M_CS#_1,2</td><td rowspan="3">(CL = 20pF,
I_{OL}=-10mA,
I_{OH}=10mA),</td><td>t_{CKCYC} - 2.0</td><td>-</td><td>ns</td><td></td></tr>
<tr><td>CK↓ -> CS↑
Chip select hold time</td><td>t_{CSH}</td><td>M_CS#_1,2</td><td>t_{CKCYC}/2</td><td>-</td><td>ns</td><td></td></tr>
<tr><td>RWDS↓-> CK↓
Data Mask Valid</td><td>t_{DMV}</td><td>M_RWDS</td><td>1</td><td>-</td><td>ns</td><td></td></tr>
</table>
</td></tr>
</table>

<table>
<tr><th>Page</th><th>Section</th><th>Change Results</th></tr>
<tr><td>235</td><td>9.Electric Characteristics
9.1.4.16 Hyper BUS</td><td>
Revised as below:
Error)
(16-3) Hyper Bus Read Timing (HyperFlash)
<table>
<tr><th rowspan="2">Parameter</th><th rowspan="2">Symbol</th><th rowspan="2">Pin Name</th><th rowspan="2">Conditions</th><th colspan="2">Value</th><th rowspan="2">Unit</th><th rowspan="2">Remarks</th></tr>
<tr><th>Min</th><th>Max</th></tr>
<tr><td>CS↑↓ -> CK↑
Chip Select setup time</td><td>t_{CSS}</td><td>M_CS#_1,2</td><td rowspan="6">(CL = 20pF,
I_{OL}=-10mA,
I_{OH}=10mA),</td><td>3.0</td><td>-</td><td>ns</td><td></td></tr>
<tr><td>DQ -> CK↑↓
Input setup time</td><td>t_{IS}</td><td>M_DQ7-0</td><td>1.25</td><td>-</td><td>ns</td><td></td></tr>
<tr><td>CK↑↓ -> DQ
Input hold time</td><td>t_{IH}</td><td>M_DQ7-0</td><td>1.25</td><td>-</td><td>ns</td><td></td></tr>
<tr><td>CK↓ -> CS↑
Chip select hold time</td><td>t_{CSH}</td><td>M_CS#_1,2</td><td>0</td><td>-</td><td>ns</td><td></td></tr>
<tr><td>RDS↑↓> DQ (valid)
RDS transition to DQ valid</td><td>t_{DSS}</td><td>M_DQ7-0</td><td>-0.8</td><td>+0.8</td><td>ns</td><td></td></tr>
<tr><td>RDS↑↓> DQ (invalid)
RDS transition to DQ invalid</td><td>t_{DSH}</td><td>M_DQ7-0</td><td>-0.8</td><td>+0.8</td><td>ns</td><td></td></tr>
</table>
Correct)
(3) Hyper Bus Read Timing (HyperFlash)
<table>
<tr><th rowspan="2">Parameter</th><th rowspan="2">Symbol</th><th rowspan="2">Pin Name</th><th rowspan="2">Conditions</th><th colspan="2">Value</th><th rowspan="2">Unit</th><th rowspan="2">Remarks</th></tr>
<tr><th>Min</th><th>Max</th></tr>
<tr><td>CS↑↓ -> CK↑
Chip Select setup time</td><td>t_{CSS}</td><td>M_CS#_1,2</td><td rowspan="6">(CL = 20pF,
I_{OL}=-10mA,
I_{OH}=10mA),</td><td>t_{RDSCYC} -2.0</td><td>-</td><td>ns</td><td></td></tr>
<tr><td>DQ -> CK↑↓
Setup time</td><td>t_{IS}</td><td>M_DQ7-0</td><td>1.25</td><td>-</td><td>ns</td><td></td></tr>
<tr><td>CK↑↓ -> DQ
Hold time</td><td>t_{IH}</td><td>M_DQ7-0</td><td>1.25</td><td>-</td><td>ns</td><td></td></tr>
<tr><td>CK↓ -> CS↑
Chip select hold time</td><td>t_{CSH}</td><td>M_CS#_1,2</td><td>t_{RDSCYC} / 2</td><td>-</td><td>ns</td><td></td></tr>
<tr><td>RDS↑↓> DQ
Setup time</td><td>t_{DSS}</td><td>M_DQ7-0</td><td>-0.8</td><td>-</td><td>ns</td><td></td></tr>
<tr><td>RDS↑↓> DQ
Hold time</td><td>t_{DSH}</td><td>M_DQ7-0</td><td>-0.8</td><td>-</td><td>ns</td><td></td></tr>
</table>
</td></tr>
</table>

<table>
<tr><th>Page</th><th>Section</th><th>Change Results</th></tr>
<tr><td>236</td><td>9.Electric Characteristics
9.1.4.16 Hyper BUS</td><td>
Revised as below:
Error)
(16-4) Hyper Bus Read Timing (HyperRAM)
<table>
<tr><th rowspan="2">Parameter</th><th rowspan="2">Symbol</th><th rowspan="2">Pin Name</th><th rowspan="2">Conditions</th><th colspan="2">Value</th><th rowspan="2">Unit</th><th rowspan="2">Remarks</th></tr>
<tr><th>Min</th><th>Max</th></tr>
<tr><td>CS↑↓ -> CK↑
Chip Select setup time</td><td>t_{CSS}</td><td>M_CS#_1,2</td><td rowspan="8">(CL = 20pF,
I_{OL}=-10mA,
I_{OH}=10mA),</td><td>3.0</td><td>-</td><td>ns</td><td></td></tr>
<tr><td>DQ -> CK↑↓
Input setup time</td><td>t_{IS}</td><td>M_DQ7-0</td><td>1.25</td><td>-</td><td>ns</td><td></td></tr>
<tr><td>CK↑↓ -> DQ
Input hold time</td><td>t_{IH}</td><td>M_DQ7-0</td><td>1.25</td><td>-</td><td>ns</td><td></td></tr>
<tr><td>CK↓ -> CS↑
Chip select hold time</td><td>t_{CSH}</td><td>M_CS#_1,2</td><td>0</td><td>-</td><td>ns</td><td></td></tr>
<tr><td>RWDS↑↓> DQ (valid)
RWDS transition to DQ valid</td><td>t_{DSS}</td><td>M_DQ7-0</td><td>-0.8</td><td>+0.8</td><td>ns</td><td></td></tr>
<tr><td>RWDS↑↓> DQ (invalid)
RWDS transition to DQ invalid</td><td>t_{DSH}</td><td>M_DQ7-0</td><td>-0.8</td><td>+0.8</td><td>ns</td><td></td></tr>
<tr><td>CK↑ -> RWDS↑↓
Refresh Indicator Valid</td><td>t_{RIV}</td><td>M_RWDS</td><td>-</td><td>6</td><td>ns</td><td></td></tr>
<tr><td>CK↑ -> RWDS(Hi-z)
Refresh Indicator Hold</td><td>t_{RIH}</td><td>M_RWDS</td><td>0</td><td>-</td><td>ns</td><td></td></tr>
</table>
Correct)
(4) Hyper Bus Read Timing (HyperRAM)
<table>
<tr><th rowspan="2">Parameter</th><th rowspan="2">Symbol</th><th rowspan="2">Pin Name</th><th rowspan="2">Conditions</th><th colspan="2">Value</th><th rowspan="2">Unit</th><th rowspan="2">Remarks</th></tr>
<tr><th>Min</th><th>Max</th></tr>
<tr><td>CS↑↓ -> CK↑
Chip Select setup time</td><td>t_{CSS}</td><td>M_CS#_1,2</td><td rowspan="8">(CL = 20pF,
I_{OL}=-10mA,
I_{OH}=10mA),</td><td>t_{RDSCYC} -2.0</td><td>-</td><td>ns</td><td></td></tr>
<tr><td>DQ -> CK↑↓
Setup time</td><td>t_{IS}</td><td>M_DQ7-0</td><td>1.25</td><td>-</td><td>ns</td><td></td></tr>
<tr><td>CK↑↓ -> DQ
Hold time</td><td>t_{IH}</td><td>M_DQ7-0</td><td>1.25</td><td>-</td><td>ns</td><td></td></tr>
<tr><td>CK↓ -> CS↑
Chip select hold time</td><td>t_{CSH}</td><td>M_CS#_1,2</td><td>t_{RDSCYC} /2</td><td>-</td><td>ns</td><td></td></tr>
<tr><td>RWDS↑↓> DQ (valid)
Setup time</td><td>t_{DSS}</td><td>M_DQ7-0</td><td>-0.8</td><td>-</td><td>ns</td><td></td></tr>
<tr><td>RWDS↑↓> DQ (invalid)
Hold time</td><td>t_{DSH}</td><td>M_DQ7-0</td><td>-0.8</td><td>-</td><td>ns</td><td></td></tr>
<tr><td>CK↑ -> RWDS↑↓
Refresh Indicator Valid</td><td>t_{RIV}</td><td>M_RWDS</td><td>-</td><td>6</td><td>ns</td><td></td></tr>
<tr><td>CK↑ -> RWDS(Hi-z)
Refresh Indicator Hold</td><td>t_{RIH}</td><td>M_RWDS</td><td>0</td><td>-</td><td>ns</td><td></td></tr>
</table>
</td></tr>
<tr><td>237
238
239</td><td>9.Electric Characteristics
9.1.4.17 Ethernet AVB</td><td>
Revised as below:
Error)
(18-1) Ethernet Receive Timing
(18-2) Ethernet Transmit Timing
(18-3) MDIO Timing

Correct)
(1)Ethernet Receive Timing
(2) Ethernet Transmit Timing
(3) MDIO Timing
</td></tr>
</table>

Page	Section	Change Results
248	11.Ordering Information	Revised part number as below: Error) Part number S6J335EKSB******* Correct) Part number S6J335EKSC*******
Rev.*B		
13	3.Product Description 3.2 Product Description	Revised as below: Error) 12bit resolution, 2 unit 64 channels of analog input for TEQFP208 48 channels of analog input for TEQFP176 35 channel of analog input for TEQFP144 External trigger and timer trigger are available. The description of the A/D converter function should be referred in the S6J3300 hardware manual. Though the chapter of I/O port in TRAVEO™ T1G Platform Hardware Manual describes another A/D converter function, do not refer it. Correct) 12bit resolution, 2 unit(Unit0 is possible to select channels 0-31. Unit1 is possible to select channels 32-63.) 64 channels of analog input for TEQFP208 48 channels of analog input for TEQFP176 35 channel of analog input for TEQFP144 External trigger and timer trigger are available. The description of the A/D converter function should be referred in the S6J3300 hardware manual. Though the chapter of I/O port in TRAVEO™ T1G Platform Hardware Manual describes another A/D converter function, do not refer it. A/D Channel Control Register (ADC12Bn_CHCTRL0)[bit5:0] ANIN[5:0] : Analog Input Selection bits. This register setting is possible of channel 0-31 (the register value is 00_0000 to 01_1111).
14	3.Product Description 3.2.Product description	Revised as below: Correct) Power Supply Control (PSC): PSC (PSC_1) output is used for external 1.2V power supply module control and automatically switched with the following condition. "High": Request to supply VCC12 - "Power ON Reset" is released - CPU wakes up from PSS shutdown mode "Low": Request to stop supplying VCC12 - CPU transfers from RUN mode to PSS shutdown mode. For timing chart of output signals include PSC in detail, see the "S6J3300 hardware manual" and chapter "State Transition"
21 22	4.Package and Pin Assignment 4.2.Package Dimensions	Revised as below: 4.2.3.TEQFP144 Error) Figure 4 6: TEQFP144 Figure 4 7: TEQFP144 The package dimension of TEQFP144 (0.4mm Pitch) is the provisional version. Correct) Figure 4 6: TEQFP144 (0.5mm Pitch) Figure 4 7: TEQFP144 (0.4mm Pitch) The package dimension of TEQFP144 (0.4mm Pitch) is the formal version.

Page	Section	Change Results
29 30	6.Port Description 6.1 Port Description	Revised the below: Error) ADC Analog [0 to 63] input pin Correct) ADC Unit0 [ch.0 to ch.31] input pin ADC Unit1 [ch.32 to ch.63] input pin
161	8.Precautions and Handling Devices 8.1.1.Precautions for Product Design	Revised the below: Processing and Protection of Pins Error) (1) Preventing Over-Voltage and Over-Current Conditions Exposure to voltage or current levels in excess of maximum ratings at any pin is likely to cause deterioration within the device, and in extreme cases leads to permanent damage of the device. Try to prevent such overvoltage or over-current conditions at the design stage. Correct) (1) Preventing Over-Voltage and Over-Current Conditions Exposure to voltage or current levels in excess of maximum ratings at any pin is likely to cause deterioration within the device and in extreme cases leads to permanent damage of the device. Try to prevent such overvoltage or over-current conditions at the design stage.
165	8.Precautions and Handling Devices 8.2.Handling Devices	Revised as below: Correct) **Method to Switch Off VCC12 during Power-Off Sequence** During power-off sequence, it is necessary to switch off VCC12 by driving PSC1 pin low by entering PSS mode (power domain 2 off). If VCC12 needs to be switched off by other means, RSTX needs to be asserted before switching off VCC12 to inactivate the operation of VCC12 supplied domain below the operation assurance range.

Page	Section	Change Results
169	9.Electric Characteristics 9.1.2 Recommended operating condition	Revised as below: Error) The detection/release threshold values of following LVD channels are potentially below supply range defined in 9.1.2 Recommended operating condition (refer to "9.1.4.11 Low Voltage Detection (External Voltage)" and "9.1.4.12 Low Voltage Detection (Internal Voltage)" for detection/release threshold values for these LVD channels): LVDL0 LVDL1 LVDL2 LVDH0 LVDH1 LVDH2 Correct) The detection/release threshold values of following LVD channels are potentially below supply range defined in 9.1.2 Recommended operating condition (refer to "9.1.4.11 Low Voltage Detection (External Voltage)" and "9.1.4.12 Low Voltage Detection (Internal Voltage)" for detection/release threshold values for these LVD channels): LVDL0 LVDL1 LVDL2 LVDH0 LVDH1 LVDH2 Detection voltage of the external low voltage detection reset (initial) is 2.6V±3.5%*2 *3 or 4.0V±3.5%*1. This detection voltage level setting is below the minimum operation assurance voltage (2.7V*2 *3 or 4.0V*1) . Between this detection voltage and the minimum operation assurance voltage, MCU functions are not guaranteed except for the low voltage detector. Note that although the detection level is below the minimum operation guarantee voltage, the LVD reset factor flag is set as the voltage drops below the detection level.
180	9.Electric Characteristics 9.1.4.1.Source clock timing	Revised as below: Error) Notes: − The maximum/minimum values have been standardized with the main clock and PLL clock in use. − Jitter of source oscillator must be smaller than 300ppm. Correct) Notes: − The maximum/minimum values have been standardized with the main clock and PLL clock in use. − Jitter of source oscillator must be smaller than 300ppm. − Enough evaluation and adjustment are recommended using oscillator on your system board.

<table>
<tr><th>Page</th><th>Section</th><th>Change Results</th></tr>
<tr><td>183</td><td>9.Electric Characteristics
9.1.4.3.Internal clock timing</td><td>Revised as below:
Error)
- Note that Ta=125 condition is not supported in this product type.

When using SSCG_PLL output for these internal clock, the MAX value of frequency has the following restrictions.
‐ On the presumption that the modulation mode of SSCG_PLL is used with down spread, the MAX value of the frequency is standardized.
‐ This means that MAX value of frequency is the maximum value when SSCG_PLL was modulated.

Correct)
- Note that Ta=125 condition is not supported in this product type.

When using SSCG_PLL output for these internal clock, the MAX value of frequency has the following restrictions.
- On the presumption that the modulation mode of SSCG_PLL is used with down spread, the MAX value of the frequency is standardized.
- This means that MAX value of frequency is the maximum value when SSCG_PLL was modulated.
- "Unused" means a clock source which doesn’t have any supply destinations. Configure it as disable with performing at the lower clock frequency than the described maximum.</td></tr>
<tr><td>185</td><td>9.Electric Characteristics
9.1.4.3.internal clock timing</td><td>Added Oscillation clock frequency as below:

Correct)
<table>
<tr><th colspan="2" rowspan="3"></th><th colspan="8">Internal Operation Clock Frequency</th></tr>
<tr><th rowspan="2">Main Clock</th><th colspan="7">PLL Clock</th></tr>
<tr><th>Multiplied by 1</th><th>Multiplied by 2</th><th></th><th>Multiplied by 15</th><th>Multiplied by 30</th><th>Multiplied by 40</th><th>Multiplied by 60</th></tr>
<tr><td rowspan="3">Oscillation clock frequency [MHz]</td><td>4</td><td>2</td><td>4</td><td>8</td><td>…</td><td>60</td><td>120</td><td>160</td><td>240</td></tr>
<tr><td>8</td><td>4</td><td>8</td><td>16</td><td>…</td><td>120</td><td>240</td><td></td><td></td></tr>
<tr><td>16</td><td>8</td><td>16</td><td>32</td><td>…</td><td>240</td><td></td><td></td><td></td></tr>
</table>
</td></tr>
</table>

<table>
<tr><th>Page</th><th>Section</th><th>Change Results</th></tr>
<tr><td>214</td><td>9.Electric Characteristics
9.1.4.6Multi-Function Serial</td><td>
Revised as below:
Error)
I²C timing (SMR:MD2-0=0b100)
(T_A: Recommended operating conditions, Vcc5=Vcc53=5.0 V ±10%, V_{CC}12=1.15V ±0.06V, V_{SS}=0.0 V)
<table>
<tr><th rowspan="2">Parameter</th><th rowspan="2">Symbol</th><th rowspan="2">Pin Name</th><th rowspan="2">Conditions</th><th colspan="2">Standard Mode</th><th colspan="2">High-Speed Mode</th></tr>
<tr><th>Min</th><th>Max</th><th>Min</th><th>Max</th></tr>
<tr><td>SCL clock frequency</td><td>f_{SCL}</td><td>SCL0, SCL1, SCL4, SCL8 to SCL12, SCL16 to SCL17</td><td>C_L=50pF, R=(Vp/I_{OL})*1</td><td>0</td><td>100</td><td>0</td><td>400</td></tr>
</table>
Correct)
I²C timing (SMR:MD2-0=0b100)
(T_A: Recommended operating conditions, Vcc5=Vcc53=5.0 V ±10%, V_{CC}12=1.15V ±0.06V, V_{SS}=0.0 V)
<table>
<tr><th rowspan="2">Parameter</th><th rowspan="2">Symbol</th><th rowspan="2">Pin Name</th><th rowspan="2">Conditions</th><th colspan="2">Standard Mode</th><th colspan="2">Fast Mode</th></tr>
<tr><th>Min</th><th>Max</th><th>Min</th><th>Max</th></tr>
<tr><td>SCL clock frequency</td><td>f_{SCL}</td><td>SCL0, SCL1, SCL4, SCL8 to SCL12, SCL16 to SCL17</td><td>C_L=50pF, R=(Vp/I_{OL})*1</td><td>0</td><td>100</td><td>0</td><td>400</td></tr>
</table>
Error)
*3: A high-speed mode I²C bus device can be used on a standard mode I²C bus system as long as the device satisfies the requirement of "t_{SUDAT} ≥ 250 ns".

Correct)
*3: A fast mode I²C bus device can be used on a standard mode I²C bus system as long as the device satisfies the requirement of "t_{SUDAT} ≥ 250 ns".
</td></tr>
<tr><td>222</td><td>9.Electric Characteristics
9.1.4.11.Low Voltage Detection (External Voltage)</td><td>
Added *5 and *5 sentences as below:
Error)
<table>
<tr><th rowspan="2">Parameter</th><th rowspan="2">Symbol</th><th rowspan="2">Pin Name</th><th rowspan="2">Conditions</th><th colspan="3">Value</th><th rowspan="2">Unit</th><th rowspan="2">Remarks</th></tr>
<tr><th>Min</th><th>Typ</th><th>Max</th></tr>
<tr><td rowspan="3">Detection voltage (after trimming)</td><td rowspan="3">V_{DLAT}</td><td rowspan="2">VCC5</td><td rowspan="2">*1</td><td>3.86 *3</td><td>4.0 *3</td><td>4.14 *3</td><td rowspan="2">V</td><td rowspan="3">When power-supply voltage falls and detection level is set initially Typ±3.5%</td></tr>
<tr><td>2.51 *4</td><td>2.6 *4</td><td>2.69 *4</td></tr>
<tr><td>VCC3</td><td>*1</td><td>2.51</td><td>2.6</td><td>2.69</td><td>V</td></tr>
</table>
Correct)
<table>
<tr><th rowspan="2">Parameter</th><th rowspan="2">Symbol</th><th rowspan="2">Pin Name</th><th rowspan="2">Conditions</th><th colspan="3">Value</th><th rowspan="2">Unit</th><th rowspan="2">Remarks</th></tr>
<tr><th>Min</th><th>Typ</th><th>Max</th></tr>
<tr><td rowspan="3">Detection voltage (after trimming)</td><td rowspan="3">V_{DLAT}</td><td rowspan="2">VCC5</td><td rowspan="2">*1</td><td>3.86 *3</td><td>4.0 *3</td><td>4.14 *3</td><td rowspan="2">V</td><td rowspan="3">When power-supply voltage falls and detection level is set initially Typ±3.5% *5</td></tr>
<tr><td>2.51 *4</td><td>2.6 *4</td><td>2.69 *4</td></tr>
<tr><td>VCC3</td><td>*1</td><td>2.51</td><td>2.6</td><td>2.69</td><td>V</td></tr>
</table>
*5: This detection voltage level setting is below the minimum operation assurance voltage (2.7V*4 or 4.0V*3) .
Between this detection voltage and the minimum operation assurance voltage,
MCU functions are not guaranteed except for the low voltage detector.
Note that although the detection level is below the minimum operation guarantee voltage,
the LVD reset factor flag is set as the voltage drops below the detection level.
</td></tr>
</table>

<table>
<tr><th>Page</th><th>Section</th><th>Change Results</th></tr>
<tr><td>223</td><td>9.Electric Characteristics
9.1.4.11.Low Voltage Detection (External Voltage)</td><td>
Added *2 and *2 sentences as below:
Error)
<table>
<tr><th rowspan="2">Parameter</th><th rowspan="2">Symbol</th><th rowspan="2">Pin Name</th><th rowspan="2">Conditions</th><th colspan="3">Value</th><th rowspan="2">Unit</th><th rowspan="2">Remarks</th></tr>
<tr><th>Min</th><th>Typ</th><th>Max</th></tr>
<tr><td>Detection voltage (after trimming)</td><td>V_{RDLAT}</td><td>VCC12</td><td>*1</td><td>0.7841</td><td>0.8125</td><td>0.8410</td><td>V</td><td>When power-s voltage falls Typ±3.5%</td></tr>
</table>
Correct)
<table>
<tr><th rowspan="2">Parameter</th><th rowspan="2">Symbol</th><th rowspan="2">Pin Name</th><th rowspan="2">Conditions</th><th colspan="3">Value</th><th rowspan="2">Unit</th><th rowspan="2">Remarks</th></tr>
<tr><th>Min</th><th>Typ</th><th>Max</th></tr>
<tr><td>Detection voltage (after trimming)</td><td>V_{RDLAT}</td><td>VCC12</td><td>*1</td><td>0.7841</td><td>0.8125</td><td>0.8410</td><td>V</td><td>When power-s voltage falls Typ±3.5% *2</td></tr>
</table>
*2: This detection voltage level setting is below the minimum operation assurance voltage .
Between this detection voltage and the minimum operation assurance voltage,
MCU functions are not guaranteed except for the low voltage detector.
Note that although the detection level is below the minimum operation guarantee voltage,
the LVD reset factor flag is set as the voltage drops below the detection level.
</td></tr>
<tr><td>224</td><td>9.Electric Characteristics
9.1.4.12.Low Voltage Detection (Internal Voltage)</td><td>
Added *2 and *2 sentences as below:
Error)
<table>
<tr><th rowspan="2">Parameter</th><th rowspan="2">Symbol</th><th rowspan="2">Pin Name</th><th rowspan="2">Conditions</th><th colspan="3">Value</th><th rowspan="2">Unit</th><th rowspan="2">Remarks</th></tr>
<tr><th>Min</th><th>Typ</th><th>Max</th></tr>
<tr><td>Detection voltage (after trimming)</td><td>V_{RDLAT}</td><td>-</td><td>*1</td><td>0.844</td><td>0.875</td><td>0.906</td><td>V</td><td>When power-supply voltage falls Typ±3.5%</td></tr>
</table>
Correct)
<table>
<tr><th rowspan="2">Parameter</th><th rowspan="2">Symbol</th><th rowspan="2">Pin Name</th><th rowspan="2">Conditions</th><th colspan="3">Value</th><th rowspan="2">Unit</th><th rowspan="2">Remarks</th></tr>
<tr><th>Min</th><th>Typ</th><th>Max</th></tr>
<tr><td>Detection voltage (after trimming)</td><td>V_{RDLAT}</td><td>-</td><td>*1</td><td>0.844</td><td>0.875</td><td>0.906</td><td>V</td><td>When power-supply voltage falls Typ±3.5% *2</td></tr>
</table>
*2: This detection voltage level setting is below the minimum operation assurance voltage .
Between this detection voltage and the minimum operation assurance voltage,
MCU functions are not guaranteed except for the low voltage detector.
Note that although the detection level is below the minimum operation guarantee voltage,
the LVD reset factor flag is set as the voltage drops below the detection level.
</td></tr>
<tr><td colspan="3">Rev. *C</td></tr>
<tr><td>1</td><td>Features</td><td>
Error)
□ General purpose I/O port : up to 146
Correct)
□ General purpose I/O port : up to 148
</td></tr>
</table>

<table>
<tr><th>Page</th><th>Section</th><th>Change Results</th></tr>
<tr><td>4</td><td>1.Overview
1.2 Document definition</td><td>Error)
<table>
<tr><th>Document Type</th><th>Definition</th><th>Primary User</th><th>Document Code</th></tr>
<tr><td>S6J3350 Datasheet</td><td>The function and its characteristics are specified quantitatively.</td><td>Investigator and hardware engineer</td><td>002-10634</td></tr>
<tr><td>S6J3300 hardware manual</td><td>The function and its operation of S6J3300 series are described.</td><td>Software engineer</td><td>002-10185</td></tr>
<tr><td>TRAVEO™ T1G Platform Hardware Manual</td><td>The function and its operation of CPU core platform are described.</td><td>Software engineer</td><td>002-07884</td></tr>
<tr><td>Application note</td><td>The reference software, sample application, the reference board design and so on are explained.</td><td>Software and hardware engineer</td><td>Under consideration</td></tr>
</table>
Correct)
<table>
<tr><th>Document Type</th><th>Definition</th><th>Primary User</th><th>Document Code</th></tr>
<tr><td>S6J3350 Datasheet</td><td>The function and its characteristics are specified quantitatively.</td><td>Investigator and hardware engineer</td><td>002-10634</td></tr>
<tr><td>S6J3300 hardware manual</td><td>The function and its operation of S6J3300 series are described.</td><td>Software engineer</td><td>002-10185</td></tr>
<tr><td>TRAVEO™ T1G Platform Hardware Manual</td><td>The function and its operation of CPU core platform are described.</td><td>Software engineer</td><td>002-07884</td></tr>
<tr><td>Application note</td><td>The reference software, sample application, the reference board design and so on are explained.</td><td>Software and hardware engineer</td><td>002-04455
002-04446
002-09716
002-04452
002-04096
002-12061
002-02495</td></tr>
</table></td></tr>
</table>

<table>
<tr><th>Page</th><th>Section</th><th>Change Results</th></tr>
<tr><td>5</td><td>2.Function List
2.1 Product lineup</td><td>Error)
<table>
<tr><th>Function</th><th>S6J3310</th><th>S6J3320</th><th>S6J3330</th><th>S6J3340</th><th>Remark</th></tr>
<tr><td>General Purpose I/O</td><td colspan="4">Option</td><td>See 2.2.2</td></tr>
<tr><td>12bit-A/D converter</td><td colspan="4">2 unit - 48 input ports (Max)</td><td>See 2.2.2</td></tr>
</table>
Correct)
<table>
<tr><th>Function</th><th>S6J3310</th><th>S6J3320</th><th>S6J3330</th><th>S6J3340</th><th>Remark</th></tr>
<tr><td>General Purpose I/O</td><td colspan="4">Option</td><td>See 2.2.3</td></tr>
<tr><td>12bit-A/D converter</td><td colspan="4">2 unit - 48 input ports (Max)</td><td>See 2.2.3</td></tr>
</table></td></tr>
<tr><td>7</td><td>2. Function List
2.2.1 Basic option</td><td>Error)
-

Correct)
Notes:
The main RAM size is configured as follows according to Digit.
E : TCRAM 128KB + System-RAM 384KB
D : TCRAM 128KB + System-RAM 256KB
C : TCRAM 128KB + System-RAM 128KB
B : TCRAM 64KB + System-RAM 128KB</td></tr>
<tr><td>8</td><td>2.Function List
2.2.2 ID</td><td>Error)
<table>
<tr><td>Function Digit</td><td>Revision</td><td>Chip ID</td><td>JTAG ID</td></tr>
<tr><td>S,U,T,V</td><td>C</td><td>0x10122100</td><td>0x1000B5CF</td></tr>
<tr><td>A,C,E,G</td><td>C</td><td>0x10128100</td><td>0x1000B5CF</td></tr>
<tr><td>B,D,F,H</td><td>C</td><td>0x10120100</td><td>0x1000B5CF</td></tr>
</table>
Correct)
<table>
<tr><td>Function Digit</td><td>Revision</td><td>Chip ID</td><td>JTAG ID</td></tr>
<tr><td rowspan="2">S,U,T,V</td><td>C</td><td>0x10122100</td><td rowspan="6">0x1000B5CF</td></tr>
<tr><td>D</td><td>0x10122200</td></tr>
<tr><td rowspan="2">A,C,E,G</td><td>C</td><td>0x10128100</td></tr>
<tr><td>D</td><td>0x10128200</td></tr>
<tr><td rowspan="2">B,D,F,H</td><td>C</td><td>0x10120100</td></tr>
<tr><td>D</td><td>0x10120200</td></tr>
</table></td></tr>
</table>

Page	Section	Change Results
10	3.Product Description 3.2 Product description	Error) Power Domain (PD) The product series supports the power off control of PD1, PD2 (including PD3 and 5) and PD6. Correct) The product series supports the power off control of PD1, PD2 (including PD3 and 5), PD4_0, PD4_1 and PD6.
19	4.Package and Pin Assignment 4.2.1 TEQFP208	Error) - Correct) Revised PKG figure. Added PKG Code.
20	4.Package and Pin Assignment 4.2.2 TEQFP176	Error) - Correct) Revised PKG figure. Added PKG Code.
21 22	4.Package and Pin Assignment 4.2.3 TEQFP144	Error) - Correct) Revised PKG figure. Added PKG Code.
25	5.IO Circuit Type 5.1. I/O Circuit Type	Error) Type N 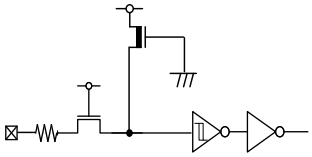 Correct) Type N 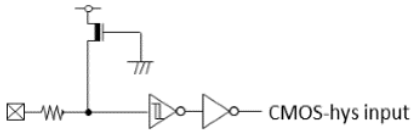

<table>
<tr><th>Page</th><th>Section</th><th>Change Results</th></tr>
<tr><td>167</td><td>9. Electric Characteristics
9.1.1 Absolute Maximum Rating</td><td>Error)
<table>
<tr><td>Power consumption</td><td>P_D</td><td>-</td><td>1500</td><td>mW</td><td></td></tr>
<tr><td rowspan="2">Operating temperature</td><td rowspan="2">T_A</td><td>-40</td><td>105</td><td>°C</td><td>P_D≤2000mW</td></tr>
<tr><td>-40</td><td>125</td><td>°C</td><td>P_D≤1200mW</td></tr>
</table>
Correct)
<table>
<tr><td rowspan="2">Power consumption</td><td rowspan="2">P_D</td><td>-</td><td>2000</td><td>mW</td><td>-40°C≤T_A≤105°C</td></tr>
<tr><td>-</td><td>1100</td><td>mW</td><td>-40°C≤T_A≤125°C</td></tr>
<tr><td rowspan="2">Operating temperature</td><td rowspan="2">T_A</td><td>-40</td><td>105</td><td>°C</td><td>P_D≤2000mW</td></tr>
<tr><td>-40</td><td>125</td><td>°C</td><td>P_D≤1100mW</td></tr>
</table></td></tr>
<tr><td>169</td><td>9. Electric Characteristics
9.1.2 Recommended operating condition</td><td>Error)
<table>
<tr><td rowspan="2">Operating temperature</td><td>TA</td><td>-</td><td>-40</td><td>105</td><td>°C</td><td>PD≤2000mW</td></tr>
<tr><td>TA</td><td>-</td><td>-40</td><td>125</td><td>°C</td><td>PD≤1200mW</td></tr>
</table>
Correct)
<table>
<tr><td rowspan="2">Operating temperature</td><td>T_A</td><td>-</td><td>-40</td><td>105</td><td>°C</td><td>P_D≤2000mW</td></tr>
<tr><td>T_A</td><td>-</td><td>-40</td><td>125</td><td>°C</td><td>P_D≤1100mW</td></tr>
</table></td></tr>
<tr><td>169</td><td>9.Electric Characteristics
9.1.2Recommended operating condition</td><td>Error)
S6J335xxSC, S6J335xxUC, S6J335xxTC, S6J335xxVC,
S6J335xxBC, S6J335xxDC, S6J335xxFC, S6J335xxHC,
S6J335xxAC, S6J335xxCC, S6J335xxEC, S6J335xxGC
Correct)
S6J335xxSx, S6J335xxUx, S6J335xxTx, S6J335xxVx,
S6J335xxBx, S6J335xxDx, S6J335xxFx, S6J335xxHx,
S6J335xxAx, S6J335xxCx, S6J335xxEx, S6J335xxGx</td></tr>
</table>

Page	Section	Change Results
169	9. Electric Characteristics 9.1.2 Recommended operating condition	Error) LVDL0 LVDL1 LVDL2 LVDH0 LVDH1 LVDH2 Detection voltage of the external low voltage detection reset (initial) is 2.6V±3.5%*2 *3 or 4.0V±3.5%*1. This detection voltage level setting is below the minimum operation assurance voltage (2.7V*2 *3 or 4.0V*1) . Between this detection voltage and the minimum operation assurance voltage, MCU functions are not guaranteed except for the low voltage detector. Note that although the detection level is below the minimum operation guarantee voltage, the LVD reset factor flag is set as the voltage drops below the detection level. Correct) LVDL0 LVDL1 LVDL2 LVDH0 LVDH1 LVDH2 When it is used outside recommended range (this is the range of guaranteed operation), contact your sales representative. The initial detection voltage of the external low voltage detection is 2.6V±3.5% or 4.0V±3.5%. This LVD setting and internal LVD (LVDL0/LVDL1) cannot be used to reliably generate a reset before voltage dips below minimum guaranteed MCU operation voltage, as these detection levels are below the minimum guaranteed MCU operation voltage.

Page	Section	Change Results
178 179	9. Electric Characteristics 9.1.3 DC characteristics	Error)

I_{CCT5}	VCC5	Timer mode	-	370	810	µA	T_A=25°C. Power only supplies to Backup RAM and system controllers. When using 4MHz crystal for main oscillator.
			-	360	780	µA	T_A=25°C. Power only supplies to Backup RAM and system controllers. When shutting down 16kB Backup RAM and using 4MHz crystal for main oscillator.
I_{CCH5}		Stop mode	-	100	400	µA	T_A=25°C. Power only supplies to Backup RAM and system controllers.

Correct)

I_{CCT5}	VCC5	Timer mode	-	370	810	µA	T_A=25°C. 4MHz crystal for main oscillator PD1=ON, PD4_0=ON, PD4_1=ON
			-	360	780	µA	T_A=25°C. 4MHz crystal for main oscillator. PD1=ON, PD4_0=ON or PD4_1=ON
			-	350	750	µA	T_A=25°C. 4MHz crystal for main oscillator. PD1=ON
			-	450	890	µA	T_A=25°C. 8MHz crystal for main oscillator PD1=ON, PD4_0=ON, PD4_1=ON
			-	440	860	µA	T_A=25°C. 8MHz crystal for main oscillator. PD1=ON, PD4_0=ON or PD4_1=ON
			-	430	830	µA	T_A=25°C. 8MHz crystal for main oscillator. PD1=ON
			-	110	430	µA	T_A=25°C. 32kHz crystal for sub oscillator PD1=ON, PD4_0=ON, PD4_1=ON
			-	100	400	µA	T_A=25°C. 32kHz crystal for sub oscillator. PD1=ON, PD4_0=ON or PD4_1=ON
			-	90	370	µA	T_A=25°C. 32kHz crystal for sub oscillator. PD1=ON

I_{CCH5}	VCC5	Stop mode	-	100	400	µA	T_A=25°C. PD1=ON, PD4_0=ON, PD4_1=ON
			-	90	370	µA	T_A=25°C. PD1=ON, PD4_0=ON or PD4_1=ON
			-	80	340	µA	T_A=25°C. PD1=ON

<table>
<tr><th>Page</th><th>Section</th><th>Change Results</th></tr>
<tr><td>188</td><td>9. Electric Characteristics
9.1.4.5 Power-on Conditions</td><td>Error)
<table><tr><td>Power off time</td><td></td><td>VCC5</td><td>-</td><td>100</td><td>-</td><td>-</td><td>µs</td><td>*2</td></tr></table>
Correct)
<table><tr><td>Power off time</td><td>t_{OFF}</td><td>VCC5</td><td>-</td><td>100</td><td>-</td><td>-</td><td>µs</td><td>*2</td></tr></table></td></tr>
<tr><td>223
248</td><td>9.Electric Characteristics
9.1.4.11Low Voltage Detection (External Voltage)
9.1.5 A/D converter</td><td>Error)
S6J335xxSC, S6J335xxUC, S6J335xxTC, S6J335xxVC,
S6J335xxAC, S6J335xxBC, S6J335xxCC, S6J335xxDC,
S6J335xxEC, S6J335xxFC, S6J335xxGC, S6J335xxHC
Correct)
S6J335xxSx, S6J335xxUx, S6J335xxTx, S6J335xxVx,
S6J335xxAx, S6J335xxBx, S6J335xxCx, S6J335xxDx,
S6J335xxGx, S6J335xxFx, S6J335xxGx, S6J335xxHx</td></tr>
</table>

Page	Section	Change Results
223	9. Electric Characteristics 9.1.4.11 Low Voltage Detection (External Voltage)	Low-voltage detection (external low-voltage detection) Error)

Parameter	Symbol	Pin Name	Conditions	Value			Unit	Remarks
				Min	Typ	Max		
Supply voltage range	V_{DP5}	VCC5	-	3.5 *3	-	5.5 *3	V	
				2.7 *4	-	3.6 *4		
Detection voltage (before trimming)	V_{DLBT}	VCC5	*1	3.6 *3	4.0 *3	4.4 *3	V	When power-supply voltage falls and detection level is set initially
				2.3 *4	2.6 *4	2.9 *4		
		VCC3	*1	2.3	2. 6	2.9	V	
Detection voltage (after trimming)	V_{DLAT}	VCC5	*1	3.86 *3	4.0 *3	4.14 *3	V	When power-supply voltage falls and detection level is set initially Typ±3.5% *5
				2.51 *4	2.6 *4	2.69 *4		
		VCC3	*1	2.51	2.6	2.69	V	

*5: This detection voltage level setting is below the minimum operation assurance voltage (2.7V*4 or 4.0V*3) .Between this detection voltage and the minimum operation assurance voltage, MCU functions are not guaranteed except for the low voltage detector.
Note that although the detection level is below the minimum operation guarantee voltage, the LVD reset factor flag is set as the voltage drops below the detection level.

Correct)

Parameter	Symbol	Pin Name	Conditions	Value			Unit	Remarks
				Min	Typ	Max		
Supply voltage range	V_{DP5}	VCC5	-	3.5 *3	-	5.5 *3	V	
				2.7 *4	-	3.6 *4		
	V_{DP3}	VCC3	-	2.7	-	3.6	V	
Detection voltage (before trimming)	V_{DLBT}	VCC5	*1	3.6 *3	4.0 *3	4.4 *3	V	When power-supply voltage falls and detection level is set initially
			*1 *5	2.3 *4	2.6 *4	2.9 *4		
		VCC3	*1 *5	2.3	2. 6	2.9	V	
Detection voltage (after trimming)	V_{DLAT}	VCC5	*1	3.86 *3	4.0 *3	4.14 *3	V	When power-supply voltage falls and detection level is set initially Typ±3.5%
			*1 *5	2.51 *4	2.6 *4	2.69 *4		
		VCC3	*1 *5	2.51	2.6	2.69	V	

*5: These LVD settings cannot be used to reliably generate a reset before voltage dips below minimum guaranteed MCU operation voltage, as these detection levels are below the minimum guaranteed MCU operation voltage(2.7V).

<table>
<tr><th>Page</th><th>Section</th><th>Change Results</th></tr>
<tr><td>224</td><td>9. Electric Characteristics
9.1.4.11 Low Voltage Detection (External Voltage)</td><td>
Low-voltage detection (1.15 V power supply low-voltage detection)
Error)
<table>
<tr><th rowspan="2">Parameter</th><th rowspan="2">Symbol</th><th rowspan="2">Pin Name</th><th rowspan="2">Conditions</th><th colspan="3">Value</th><th rowspan="2">Unit</th><th rowspan="2">Remarks</th></tr>
<tr><th>Min</th><th>Typ</th><th>Max</th></tr>
<tr><td>Supply voltage range</td><td>V_{RDP12}</td><td>VCC12</td><td>-</td><td>1.09</td><td>-</td><td>1.21</td><td>V</td><td></td></tr>
<tr><td>Detection voltage (before trimming)</td><td>V_{RDLBT}</td><td>VCC12</td><td>*1</td><td>0.7125</td><td>0.8125</td><td>0.9125</td><td>V</td><td>When power-supply voltage falls</td></tr>
<tr><td>Detection voltage (after trimming)</td><td>V_{RDLAT}</td><td>VCC12</td><td>*1</td><td>0.7841</td><td>0.8125</td><td>0.841</td><td>V</td><td>When power-supply voltage falls
Typ±3.5% *2</td></tr>
</table>
*2: This detection voltage level setting is below the minimum operation assurance voltage .
Between this detection voltage and the minimum operation assurance voltage,
MCU functions are not guaranteed except for the low voltage detector.
Note that although the detection level is below the minimum operation guarantee voltage,
the LVD reset factor flag is set as the voltage drops below the detection level.

Correct)
<table>
<tr><th rowspan="2">Parameter</th><th rowspan="2">Symbol</th><th rowspan="2">Pin Name</th><th rowspan="2">Conditions</th><th colspan="3">Value</th><th rowspan="2">Unit</th><th rowspan="2">Remarks</th></tr>
<tr><th>Min</th><th>Typ</th><th>Max</th></tr>
<tr><td>Supply voltage range</td><td>V_{RDP12}</td><td>VCC12</td><td>-</td><td>1.09</td><td>-</td><td>1.21</td><td>V</td><td></td></tr>
<tr><td>Detection voltage (before trimming)</td><td>V_{RDLBT}</td><td>VCC12</td><td>*1 *2</td><td>0.7125</td><td>0.8125</td><td>0.9125</td><td>V</td><td>When power-supply voltage falls</td></tr>
<tr><td>Detection voltage (after trimming)</td><td>V_{RDLAT}</td><td>VCC12</td><td>*1 *2</td><td>0.7841</td><td>0.8125</td><td>0.841</td><td>V</td><td>When power-supply voltage falls
Typ±3.5%</td></tr>
</table>
*2: These LVD settings cannot be used to reliably generate a reset before voltage dips below minimum guaranteed MCU operation voltage, as these detection levels are below the minimum guaranteed MCU operation voltage (1.09V).
</td></tr>
</table>

<table>
<tr><th>Page</th><th>Section</th><th>Change Results</th></tr>
<tr><td>225</td><td>9. Electric Characteristics
9.1.4.12 Low Voltage Detection (Internal Voltage)</td><td>Low-voltage detection (internal low-voltage detection for LVDL1) Error)
<table>
<tr><th rowspan="2">Parameter</th><th rowspan="2">Symbol</th><th rowspan="2">Pin Name</th><th rowspan="2">Conditions</th><th colspan="3">Value</th><th rowspan="2">Unit</th><th rowspan="2">Remarks</th></tr>
<tr><th>Min</th><th>Typ</th><th>Max</th></tr>
<tr><td>Supply voltage range</td><td>V_{RDP5}</td><td>-</td><td>-</td><td>1.05</td><td>-</td><td>1.21</td><td>V</td><td></td></tr>
<tr><td>Detection voltage</td><td>V_{RDLBT}</td><td>-</td><td>*1</td><td>0.775</td><td>0.875</td><td>0.975</td><td>V</td><td>When power-supply voltage falls *3</td></tr>
<tr><td>Detection voltage</td><td>V_{RDLAT}</td><td>-</td><td>*1</td><td>0.844</td><td>0.875</td><td>0.906</td><td>V</td><td>When power-supply voltage falls Typ±3.5% *2 *3</td></tr>
<tr><td>Hysteresis width</td><td>V_{RHYS}</td><td>-</td><td>-</td><td>-</td><td>75</td><td>-</td><td>mV</td><td>When power-supply voltage rises</td></tr>
<tr><td>Low-voltage detection time</td><td>TRd</td><td>-</td><td>-</td><td>-</td><td>-</td><td>30</td><td>µs</td><td>*4</td></tr>
</table>
*2: This detection voltage level setting is below the minimum operation assurance voltage . Between this detection voltage and the minimum operation assurance voltage, MCU functions are not guaranteed except for the low voltage detector. Note that although the detection level is below the minimum operation guarantee voltage, the LVD reset factor flag is set as the voltage drops below the detection level.
*3: This LVD cannot be used to reliably generate a reset before voltage dips below minimum guaranteed MCU operation voltage, as these detection levels are below the minimum guaranteed MCU operation voltage.
*4: After the brown-out event where the voltage level dips below the detection threshold for less than this time, the detection may occur or be canceled.</td></tr>
</table>

<table>
<tr><th>Page</th><th>Section</th><th>Change Results</th></tr>
<tr><td></td><td></td><td>Correct)
<table>
<tr><th rowspan="2">Parameter</th><th rowspan="2">Symbol</th><th rowspan="2">Pin Name</th><th rowspan="2">Conditions</th><th colspan="3">Value</th><th rowspan="2">Unit</th><th rowspan="2">Remarks</th></tr>
<tr><th>Min</th><th>Typ</th><th>Max</th></tr>
<tr><td>Supply voltage range</td><td>V_{RDP5}</td><td>-</td><td>-</td><td>1.05</td><td>-</td><td>1.21</td><td>V</td><td></td></tr>
<tr><td>Detection voltage (before trimming)</td><td>V_{RDLBT}</td><td>-</td><td>*1 *2</td><td>0.775</td><td>0.875</td><td>0.975</td><td>V</td><td>When power-supply voltage falls</td></tr>
<tr><td>Detection voltage (after trimming)</td><td>V_{RDLAT}</td><td>-</td><td>*1 *2</td><td>0.844</td><td>0.875</td><td>0.906</td><td>V</td><td>When power-supply voltage falls
Typ±3.5%</td></tr>
<tr><td>Hysteresis width</td><td>V_{RHYS}</td><td>-</td><td>-</td><td>-</td><td>75</td><td>-</td><td>mV</td><td>When power-supply voltage rises</td></tr>
<tr><td>Low-voltage detection time</td><td>TRd</td><td>-</td><td>-</td><td>-</td><td>-</td><td>30</td><td>µs</td><td>*3</td></tr>
</table>
*2: This LVD cannot be used to reliably generate a reset before voltage dips below minimum guaranteed MCU operation voltage, as these detection levels are below the minimum guaranteed MCU operation voltage.
*3: After the brown-out event where the voltage level dips below the detection threshold for less than this time, the detection may occur or be canceled.</td></tr>
<tr><td>244
245
246
247</td><td>9. Electric Characteristics
9.1.4.19 Power and Reset Sequence</td><td>Error)
-
Correct)
Newly added</td></tr>
<tr><td>255</td><td>11. Ordering Information</td><td>Error)
<table>
<tr><th>Part Number</th><th>Package</th></tr>
<tr><td>S6J335EKSC*******</td><td>208-pin plastic TEQFP (TEQFP208)</td></tr>
</table>
Correct)
<table>
<tr><th>Part Number *1</th><th>Package</th></tr>
<tr><td>S6J335EKSx*******</td><td>208-pin plastic TEQFP (LEW208)</td></tr>
</table>
*1: x is selected from the following parameter.
x : C, D (Revision)</td></tr>
</table>

<table>
<tr><th>Page</th><th>Section</th><th>Change Results</th></tr>
<tr><td colspan="3">Rev. *D</td></tr>
<tr><td>6</td><td>2. Function List
2.1 Function list</td><td>CAN-FD RAM (ECC supported)
Error)
16KB/ch
It equivalents to 128 message buffer per channel of CCAN module

Correct)
16KB/ch
It equivalents to 128 message buffer per channel of MCAN module</td></tr>
<tr><td>7</td><td>2. Function List
2.2.1 Basic option</td><td>Error)
<table>
<tr><th rowspan="2">Digit</th><th colspan="2">Flash</th><th colspan="2">RAM</th></tr>
<tr><th>Program</th><th>Work</th><th>Main</th><th>Backup</th></tr>
<tr><td>E</td><td>4,160KB</td><td>112KB</td><td>512KB</td><td>16+16KB</td></tr>
<tr><td>D</td><td>3,136KB</td><td>112KB</td><td>384KB</td><td>16+16KB</td></tr>
<tr><td>C</td><td>2,112KB</td><td>112KB</td><td>256KB</td><td>16+16KB</td></tr>
<tr><td>B</td><td>1,600KB</td><td>112KB</td><td>192KB</td><td>16+16KB</td></tr>
</table>
Correct)
<table>
<tr><th rowspan="2">Digit</th><th colspan="2">Flash</th><th colspan="2">RAM</th></tr>
<tr><th>Program</th><th>Work</th><th>Main</th><th>Backup</th></tr>
<tr><td>E</td><td>4,160KB</td><td>112KB</td><td>512KB</td><td>16+16KB</td></tr>
<tr><td>D</td><td>3,136KB</td><td>112KB</td><td>384KB</td><td>16+16KB</td></tr>
</table></td></tr>
<tr><td>7</td><td>2. Function List
2.2.1 Basic option</td><td>Error)
Notes:
The main RAM size is configured as follows according to Digit.
E : TCRAM 128KB + System-RAM 384KB
D : TCRAM 128KB + System-RAM 256KB
C : TCRAM 128KB + System-RAM 128KB
B : TCRAM 64KB + System-RAM 128KB

Correct)
Notes:
The main RAM size is configured as follows according to Digit.
E : TCRAM 128KB + System-RAM 384KB
D : TCRAM 128KB + System-RAM 256KB</td></tr>
<tr><td>12</td><td>3. Product Description
3.2 Product description</td><td>Error)
<table>
<tr><td>Power Supply</td><td>3V external power supply should be controlled by GPIO.</td></tr>
</table>
Correct)
<table>
<tr><td>Power Supply</td><td>3V external power supply could be controlled by GPIO.</td></tr>
</table></td></tr>
<tr><td>47</td><td>7. Port configuration
7.1 Resource Input Configuration Module</td><td>Error)
-
Correct)
The Resource which are available through only one port does not have the multiplexer implemented i.e. No RIC_RESIN register.</td></tr>
</table>

<table>
<tr><th>Page</th><th>Section</th><th>Change Results</th></tr>
<tr><td>166</td><td>9. Electric Characteristics
9.1.1 Absolute Maximum Rating</td><td>Error)
<table><tr><td>Power supply voltage*1, *2</td><td>$V_{CC}12$</td><td>V_{SS}-0.3</td><td>V_{SS}+1.8</td><td>V</td><td>$V_{CC}12 \leq V_{CC}53$
$V_{CC}12 \leq V_{CC}3$
$V_{CC}12 \leq DV_{CC}$
$V_{CC}12 \leq AV_{CC}5$</td></tr></table>
Correct)
<table><tr><td>Power supply voltage*1, *2</td><td>$V_{CC}12$</td><td>V_{SS}-0.3</td><td>V_{SS}+1.8</td><td>V</td><td>$V_{CC}12 \leq AV_{CC}5$</td></tr></table></td></tr>
<tr><td>166</td><td>9. Electric Characteristics
9.1.1 Absolute Maximum Rating</td><td>Error)
<table><tr><td>Total maximum clamp current</td><td>$\Sigma\lvert I_{CLAMP}\rvert$</td><td>-</td><td>50</td><td>mA</td><td>SPECIAL SPEC*A</td></tr></table>
Correct)
<table><tr><td>Total maximum clamp current</td><td>$\Sigma\lvert I_{CLAMP}\rvert$</td><td>-</td><td>90</td><td>mA</td><td>*B</td></tr><tr><td>Total maximum clamp current</td><td>$\Sigma\lvert I_{CLAMP}\rvert$</td><td>-</td><td>65</td><td>mA</td><td>*C</td></tr></table></td></tr>
<tr><td>167</td><td>9. Electric Characteristics
9.1.1 Absolute Maximum Rating</td><td>Error)
-
Correct)
<table><tr><td rowspan="4">System Thermal Resistance</td><td>Theta j-a1</td><td>-</td><td>17</td><td>°C/W</td><td>TEQFP 208</td><td rowspan="4">The minimum value depends on the system specification of heat radiation. The described value is estimated under the condition which is specified at “9.1.2 Recommended operating condition”.</td></tr><tr><td>Theta j-a2</td><td>-</td><td>19</td><td>°C/W</td><td>TEQFP 176</td></tr><tr><td>Theta j-a3</td><td>-</td><td>20</td><td>°C/W</td><td>TEQFP 144 (0.5mm Pitch)</td></tr><tr><td>Theta j-a4</td><td>-</td><td>22</td><td>°C/W</td><td>TEQFP 144 (0.4mm Pitch)</td></tr><tr><td rowspan="4">Package Thermal Resistance</td><td>Psi j-t1</td><td>-</td><td>0.6</td><td>°C/W</td><td colspan="2">TEQFP208</td></tr><tr><td>Psi j-t2</td><td>-</td><td>1.0</td><td>°C/W</td><td colspan="2">TEQFP176</td></tr><tr><td>Psi j-t3</td><td>-</td><td>2.0</td><td>°C/W</td><td colspan="2">TEQFP144 (0.5mm Pitch)</td></tr><tr><td>Psi j-t4</td><td>-</td><td>2.0</td><td>°C/W</td><td colspan="2">TEQFP144 (0.4mm Pitch)</td></tr></table></td></tr>
<tr><td>169
170
171</td><td>9. Electric Characteristics
9. 1 Electric Characteristics</td><td>Error)
-
Correct)
Newly added
*B Relevant pins: All general-purpose ports and analog input pins
*C Relevant pins: All general-purpose ports and analog input pins</td></tr>
</table>

Page	Section	Change Results
173	9. Electric Characteristics 9.1.2 Recommended operating condition	Error) − In the case of use in VCC5 = AVCC5 = DVCC of conditions, please launch the power supply in the following sequence. Required power supply sequence is the following: VCC5 -> [DVCC or VCC53 or AVCC5 or VCC3] -> VCC12 Note that power supplies inside "[ ]" can be turned on in arbitrary order. Corresponding Part number is S6J335xxSC or S6J335xxUC or S6J335xxTC or S6J335xxVC or S6J335xxBC or S6J335xxDC or S6J335xxFC or S6J335xxHC. − In the case of use in VCC5 = AVCC5 < DVCC of conditions, please launch the power supply in the following sequence. Required power supply sequence is the following: VCC5 -> DVCC -> [VCC53 or AVCC5 or VCC3] -> VCC12. Note that power supplies inside "[ ]" can be turned on in arbitrary order. Corresponding Part number is S6J335xxAC or S6J335xxCC or S6J335xxEC or S6J335xxGC. Correct) - Required power supply sequence is the following: {VCC5 -> AVCC5} -> [DVCC, VCC12, VCC3, AVCC3_DAC] Note that power supplies inside "[ ]" can be turned on in arbitrary order and "{ }" can be turned on in shown sequence or simultaneously.
174	9. Electric Characteristics 9.1.2 Recommended operating condition	Error) - Correct) Note: −TA: Ambient temperature (JEDEC) −TC: Case temperature (JEDEC), the maximum measured temperature of package case top. −Both rating of TA and TC should simultaneously be satisfied as maximum operation temperature. −The following condition should be satisfied in order to facilitate heat dissipation. 1. Four or more layers PCB should be used. 2. The area of PCB should be 114.3 mm x 76.2 mm or more, and the thickness should be 1.6 mm or more. (JEDEC standard) 3. One layer of middle layers at least should be used for dedicated layer to radiate heat with residual copper rate 90% or more. The layer can be used for system ground. 4. 35% or more of the die stage area which is exposed at back surface of package should be soldered to a part of 1st layer. 5. The part of 1st layer should be connected to the dedicated heat radiation layer with more than 10 thermal via holes. Example thermal via holes on PCB <Figure> − The above figure is a schematic diagram showing PCB in section. − Thermal via holes should closely be placed and aligned with lands. − It is recommended to connect the land pattern to the VSS-ground level (GND plan of inner layer bellow the MCU) as thermal heat sink.

<table>
<tr><th>Page</th><th>Section</th><th>Change Results</th></tr>
<tr><td>182</td><td>9. Electric Characteristics
9.1.3 DC characteristics</td><td>
Error)
<table>
<tr><th rowspan="2">Parameter</th><th rowspan="2">Symbol</th><th rowspan="2">Pin Name</th><th rowspan="2">Conditions</th><th colspan="3">Value</th><th rowspan="2">Unit</th><th rowspan="2">Remarks</th></tr>
<tr><th>Min</th><th>Typ</th><th>Max</th></tr>
<tr><td rowspan="5">Power supply current</td><td rowspan="4">I_{CC12}</td><td rowspan="5">VCC12</td><td>Normal operation</td><td>-</td><td>500</td><td>1000</td><td>mA</td><td>T_A=-40 ~ 105°C CPU:240MHz, HPM:120MHz (CPU:200MHz, HPM:200MHz)</td></tr>
<tr><td></td><td>-</td><td>550</td><td>950</td><td>mA</td><td>T_A=-40 ~125°C CPU:180MHz, HPM:90MHz,</td></tr>
<tr><td>Flash write/erase</td><td>-</td><td>550</td><td>1050</td><td>mA</td><td>T_A=-40 ~ 105°C CPU:240MHz, HPM:120MHz (CPU:200MHz, HPM:200MHz)</td></tr>
<tr><td></td><td>-</td><td>600</td><td>1000</td><td>mA</td><td>T_A=-40 ~ 125°C CPU:180MHz, HPM:90MHz,</td></tr>
<tr><td>I_{CCH12}</td><td>Timer/ Stop Mode</td><td>-</td><td>-</td><td>650</td><td>mA</td><td></td></tr>
</table>
Correct)
<table>
<tr><th rowspan="2">Parameter</th><th rowspan="2">Symbol</th><th rowspan="2">Pin Name</th><th rowspan="2">Conditions</th><th colspan="3">Value</th><th rowspan="2">Unit</th><th rowspan="2">Remarks</th></tr>
<tr><th>Min</th><th>Typ</th><th>Max</th></tr>
<tr><td rowspan="5">Power supply current</td><td rowspan="4">I_{CC12}</td><td rowspan="5">VCC12</td><td>Normal operation</td><td>-</td><td>320</td><td>800</td><td>mA</td><td>T_A=-40 ~ 105°C CPU:240MHz, HPM:120MHz (CPU:200MHz, HPM:200MHz)</td></tr>
<tr><td></td><td>-</td><td>220</td><td>690</td><td>mA</td><td>T_A=-40 ~125°C CPU:180MHz, HPM:90MHz,</td></tr>
<tr><td>Flash write/erase</td><td>-</td><td>350</td><td>850</td><td>mA</td><td>T_A=-40 ~ 105°C CPU:240MHz, HPM:120MHz (CPU:200MHz, HPM:200MHz)</td></tr>
<tr><td></td><td>-</td><td>250</td><td>740</td><td>mA</td><td>T_A=-40 ~ 125°C CPU:180MHz, HPM:90MHz,</td></tr>
<tr><td>I_{CCH12}</td><td>Timer/ Stop Mode</td><td>-</td><td>-</td><td>430</td><td>mA</td><td></td></tr>
</table>
</td></tr>
<tr><td>249
250
251</td><td>9. Electric Characteristics
9.1.4.19 Power and Reset Sequence</td><td>Error)
-
Correct)
Newly added
Case-1, Case2-1 and Case2-2</td></tr>
</table>

<table>
<tr><th>Page</th><th>Section</th><th>Change Results</th></tr>
<tr><td>258</td><td>9. Electric Characteristics
9.1.6.1 Electrical Characteristics</td><td>
Error)
<table>
<tr><th rowspan="2">Parameter</th><th colspan="3">Rating</th><th rowspan="2">Unit</th><th rowspan="2">Remarks</th></tr>
<tr><th>Min</th><th>Typ</th><th>Max*3</th></tr>
<tr><td rowspan="3">Sector erase time</td><td>-</td><td>120</td><td>480</td><td>ms</td><td>Large sector*1
Internal preprogramming time included</td></tr>
<tr><td>-</td><td>120</td><td>480</td><td>ms</td><td>8kB sector*1
Internal preprogramming time included</td></tr>
<tr><td>-</td><td>120</td><td>480</td><td>ms</td><td>4kB sector*1
Internal preprogramming time included</td></tr>
<tr><td>16bit write time(Program)</td><td>-</td><td>30</td><td>384</td><td>µs</td><td>System-level overhead time excluded*1</td></tr>
<tr><td>32bit write time(Program)</td><td>-</td><td>30</td><td>384</td><td>µs</td><td>System-level overhead time excluded*1</td></tr>
<tr><td>64bit write time(Program)</td><td>-</td><td>30</td><td>384</td><td>µs</td><td>System-level overhead time excluded*1</td></tr>
<tr><td>256bit write time(Program)</td><td>-</td><td>40</td><td>512</td><td>µs</td><td>System-level overhead time excluded*1</td></tr>
<tr><td>Page mode write time(Program)</td><td>-</td><td>320</td><td>4096</td><td>µs</td><td>System-level overhead time excluded*1</td></tr>
<tr><td>32bit write time(Work)</td><td>-</td><td>30</td><td>384</td><td>µs</td><td>System-level overhead time excluded*1</td></tr>
</table>
Correct)
<table>
<tr><th rowspan="2">Parameter</th><th colspan="3">Rating</th><th rowspan="2">Unit</th><th rowspan="2">Remarks</th></tr>
<tr><th>Min</th><th>Typ</th><th>Max*3</th></tr>
<tr><td rowspan="3">Sector erase time</td><td>-</td><td>120</td><td>180</td><td>ms</td><td>Large sector*1
Internal preprogramming time included</td></tr>
<tr><td>-</td><td>120</td><td>180</td><td>ms</td><td>8kB sector*1
Internal preprogramming time included</td></tr>
<tr><td>-</td><td>120</td><td>180</td><td>ms</td><td>4kB sector*1
Internal preprogramming time included</td></tr>
<tr><td>16bit write time(Program)</td><td>-</td><td>30</td><td>60</td><td>µs</td><td>System-level overhead time excluded*1</td></tr>
<tr><td>32bit write time(Program)</td><td>-</td><td>30</td><td>60</td><td>µs</td><td>System-level overhead time excluded*1</td></tr>
<tr><td>64bit write time(Program)</td><td>-</td><td>30</td><td>60</td><td>µs</td><td>System-level overhead time excluded*1</td></tr>
<tr><td>256bit write time(Program)</td><td>-</td><td>40</td><td>70</td><td>µs</td><td>System-level overhead time excluded*1</td></tr>
<tr><td>Page mode write time(Program)</td><td>-</td><td>320</td><td>600</td><td>µs</td><td>System-level overhead time excluded*1</td></tr>
<tr><td>32bit write time(Work)</td><td>-</td><td>30</td><td>60</td><td>µs</td><td>System-level overhead time excluded*1</td></tr>
</table>
</td></tr>
<tr><td>262</td><td>12. Appendix
12.1 Application 1: JTAG tool connection</td><td>Error)
-
Correct)
Newly added this section</td></tr>
</table>

<table>
<tr><th>Page</th><th>Section</th><th>Change Results</th></tr>
<tr><td colspan="3">Rev. *E</td></tr>
<tr><td>4</td><td>1. Overview
1.2 Document Definition</td><td>Error)
Table 1-1

Correct)
Table 1-1: Document Definition</td></tr>
<tr><td>5</td><td>2. Function List
2.1 Function List</td><td>Error)
Table 2-1

Correct)
Table 2-1: Function Lineup</td></tr>
<tr><td>7</td><td>2. Function List
2.2.1 Basic option</td><td>Error)
Figure 2-1

Correct)
Figure 2-1: Option and Part Number for S6J3350 Series</td></tr>
<tr><td>7</td><td>2. Function List
2.2.1 Basic option</td><td>Error)
Revision: Revision version

Correct)
Revision:
<table>
<tr><th>Digit</th><th>Description</th></tr>
<tr><td>C</td><td>Fixed Operation frequency of embedded Program Flash and CPU,
Fixed Stabilization time for sub oscillator</td></tr>
<tr><td>D</td><td>Fixed TCFLASH Sector Write Permission and Data Retention after Reset</td></tr>
<tr><td>E</td><td>Leakage current improvement</td></tr>
</table></td></tr>
<tr><td>8</td><td>2. Function List
2.2.3 Restriction</td><td>Error)
Table 2-2

Correct)
Table 2-2: Pin Restriction</td></tr>
<tr><td>10</td><td>3. Product Description
3.2 Product Description</td><td>Error)
Table 3-1

Correct)
Table 3-1: Product Features</td></tr>
<tr><td>16</td><td>4. Package and Pin Assignment
4.1.1 TEQFP-208 Pin Assignment</td><td>Error)
Figure 4-1: TEQFP-208

Correct)
Figure 4-1: TEQFP-208 (S6J335xKyz *1)

*1: x, y ,z are selected from the following parameter.
x : E, D (Memory Size)
y : S, A, B, U, C, D, T, E, F, V, G, H (Option)
z : C, D, E (Revision)</td></tr>
</table>

Page	Section	Change Results
17	4. Package and Pin Assignment 4.1.2 TEQFP-176 Pin Assignment	Error) Figure 4-2: TEQFP-176 Correct) Figure 4-2: TEQFP-176 (S6J335xJyz *1) *1: x, y ,z are selected from the following parameter. x : E, D (Memory Size) y : S, A, B, U, C, D, T, E, F, V, G, H (Option) z : C, D, E (Revision)
17	4. Package and Pin Assignment 4.1.2 TEQFP-176 Pin Assignment	Error) - Correct) Figure 4-2: Revised Pin Assignment figure
18	4. Package and Pin Assignment 4.1.3 TEQFP-144 Pin Assignment	Error) Figure 4-3: TEQFP-144 Correct) Figure 4-3: TEQFP-144 (S6J335xHyz *1) *1: x, y ,z are selected from the following parameter. x : E, D (Memory Size) y : S, A, B, U, C, D, T, E, F, V, G, H (Option) z : C, D, E (Revision)

Page	Section	Change Results
182	9. Electric Characteristics 9.1.3 DC characteristics	Error)

Parameter	Symbol	Pin Name	Conditions	Value			Unit	Remarks
				Min	Typ	Max		
Power supply current	I_{CC12}	VCC12	Normal operation	-	320	800	mA	T_A=-40 ~ 105°C CPU:240MHz, HPM:120MHz (CPU:200MHz, HPM:200MHz)
				-	220	690	mA	T_A=-40 ~125°C CPU:180MHz, HPM:90MHz,
			Flash write/erase	-	350	850	mA	T_A=-40 ~ 105°C CPU:240MHz, HPM:120MHz (CPU:200MHz, HPM:200MHz)
				-	250	740	mA	T_A=-40 ~ 125°C CPU:180MHz, HPM:90MHz,
	I_{CCH12}		Timer/ Stop Mode	-	-	430	mA	
	I_{CC5}	VCC5	Normal operation	-	45	85	mA	
			Flash write/erase	-	-	100	mA	
	I_{CCT5}		Timer mode	-	370	810	µA	T_A=25°C. 4MHz crystal for main oscillator. PD1=ON, PD4_0=ON, PD4_1=ON
				-	360	780	µA	T_A=25°C. 4MHz crystal for main oscillator. PD1=ON, PD4_0=ON or PD4_1=ON
				-	350	750	µA	T_A=25°C. 4MHz crystal for main oscillator. PD1=ON
				-	450	890	µA	T_A=25°C. 8MHz crystal for main oscillator PD1=ON, PD4_0=ON, PD4_1=ON
				-	440	860	µA	T_A=25°C. 8MHz crystal for main oscillator. PD1=ON, PD4_0=ON or PD4_1=ON
				-	443	830	µA	T_A=25°C. 8MHz crystal for main oscillator. PD1=ON
				-	110	430	µA	T_A=25°C. 32kHz crystal for sub oscillator PD1=ON, PD4_0=ON, PD4_1=ON
				-	100	400	µA	T_A=25°C. 32kHz crystal for sub oscillator. PD1=ON, PD4_0=ON or PD4_1=ON
				-	90	370	µA	T_A=25°C. 32kHz crystal for sub oscillator. PD1=ON

Page	Section	Change Results
182	9. Electric Characteristics 9.1.3 DC characteristics	Correct)

Parameter	Symbol	Pin Name	Conditions	Value			Unit	Remarks
				Min	Typ	Max		
Power supply current	I_{CC12}	VCC12	Normal operation	-	315	775	mA	T_A=-40 ~ 105°C CPU:240MHz, HPM:120MHz (CPU:200MHz, HPM:200MHz)
				-	210	665	mA	T_A=-40 ~125°C CPU:180MHz, HPM:90MHz,
			Flash write/erase	-	320	780	mA	T_A=-40 ~ 105°C CPU:240MHz, HPM:120MHz (CPU:200MHz, HPM:200MHz)
				-	215	670	mA	T_A=-40 ~ 125°C CPU:180MHz, HPM:90MHz,
	I_{CCH12}		Timer/ Stop Mode	-	-	420	mA	
	I_{CC5}	VCC5	Normal operation	-	25	45	mA	
			Flash write/erase	-	-	60	mA	
	I_{CCT5}		Timer mode	-	370	810	µA	T_A=25°C. 4MHz crystal for main oscillator. PD1=ON, PD4_0=ON, PD4_1=ON
				-	360	780	µA	T_A=25°C. 4MHz crystal for main oscillator. PD1=ON, PD4_0=ON or PD4_1=ON
				-	350	750	µA	T_A=25°C. 4MHz crystal for main oscillator. PD1=ON
				-	450	890	µA	T_A=25°C. 8MHz crystal for main oscillator PD1=ON, PD4_0=ON, PD4_1=ON
				-	440	860	µA	T_A=25°C. 8MHz crystal for main oscillator. PD1=ON, PD4_0=ON or PD4_1=ON
				-	430	830	µA	T_A=25°C. 8MHz crystal for main oscillator. PD1=ON
				-	110	430	µA	T_A=25°C. 32kHz crystal for sub oscillator PD1=ON, PD4_0=ON, PD4_1=ON
				-	100	400	µA	T_A=25°C. 32kHz crystal for sub oscillator. PD1=ON, PD4_0=ON or PD4_1=ON
				-	90	370	µA	T_A=25°C. 32kHz crystal for sub oscillator. PD1=ON

<table>
<tr><th>Page</th><th>Section</th><th>Change Results</th></tr>
<tr><td>184</td><td>9. Electric Characteristics
9.1.3 DC characteristics</td><td>Error)
-

Correct)
<table>
<tr><th rowspan="2">Parameter</th><th rowspan="2">Symbol</th><th rowspan="2">Pin Name</th><th rowspan="2">Conditions</th><th colspan="3">Value</th><th rowspan="2">Unit</th><th rowspan="2">Remarks</th></tr>
<tr><th>Min</th><th>Typ</th><th>Max</th></tr>
<tr><td rowspan="11">Power supply current *</td><td rowspan="9">I_{CCT5}</td><td rowspan="11">VCC5</td><td rowspan="9">Timer mode</td><td>-</td><td>345</td><td>630</td><td>µA</td><td>T_A=25°C. 4MHz crystal for main oscillator PD1=ON, PD4_0=ON, PD4_1=ON</td></tr>
<tr><td>-</td><td>340</td><td>625</td><td>µA</td><td>T_A=25°C. 4MHz crystal for main oscillator. PD1=ON, PD4_0=ON or PD4_1=ON</td></tr>
<tr><td>-</td><td>335</td><td>620</td><td>µA</td><td>T_A=25°C. 4MHz crystal for main oscillator. PD1=ON</td></tr>
<tr><td>-</td><td>420</td><td>705</td><td>µA</td><td>T_A=25°C. 8MHz crystal for main oscillator PD1=ON, PD4_0=ON, PD4_1=ON</td></tr>
<tr><td>-</td><td>415</td><td>700</td><td>µA</td><td>T_A=25°C. 8MHz crystal for main oscillator. PD1=ON, PD4_0=ON or PD4_1=ON</td></tr>
<tr><td>-</td><td>410</td><td>695</td><td>µA</td><td>T_A=25°C. 8MHz crystal for main oscillator. PD1=ON</td></tr>
<tr><td>-</td><td>80</td><td>135</td><td>µA</td><td>T_A=25°C. 32kHz crystal for sub oscillator PD1=ON, PD4_0=ON, PD4_1=ON</td></tr>
<tr><td>-</td><td>75</td><td>130</td><td>µA</td><td>T_A=25°C. 32kHz crystal for sub oscillator. PD1=ON, PD4_0=ON or PD4_1=ON</td></tr>
<tr><td>-</td><td>70</td><td>125</td><td>µA</td><td>T_A=25°C. 32kHz crystal for sub oscillator. PD1=ON</td></tr>
<tr><td rowspan="3">I_{CCH5}</td><td rowspan="3">Stop mode</td><td>-</td><td>75</td><td>130</td><td>µA</td><td>T_A=25°C. PD1=ON, PD4_0=ON, PD4_1=ON</td></tr>
<tr><td>-</td><td>70</td><td>125</td><td>µA</td><td>T_A=25°C. PD1=ON, PD4_0=ON or PD4_1=ON</td></tr>
<tr><td>-</td><td>65</td><td>120</td><td>µA</td><td>T_A=25°C. PD1=ON</td></tr>
</table>
* Electric Characteristics for S6J335xxxE.</td></tr>
<tr><td>262</td><td>11. Ordering Information</td><td>Error)
x : C,D (Revision)

Correct)
X : C,D, E (Revision)</td></tr>
<tr><td colspan="3">Rev. *F</td></tr>
</table>

<table>
<tr><th>Page</th><th>Section</th><th>Change Results</th></tr>
<tr><td>5</td><td>2: Function List
2.1. Function List</td><td>Function: CRC
Error)
1 unit

Correct)
4 units</td></tr>
<tr><td>6</td><td>2: Function List
2.1. Function List</td><td>Function: DDR HSSPI
Error)
2 ch

Correct)
1 ch</td></tr>
<tr><td>8</td><td>2. Function List
2.2.2 ID</td><td>Error)
<table>
<tr><th>Function Digit</th><th>Revision</th><th>Chip ID</th><th>JTAG ID</th></tr>
<tr><td rowspan="2">S,U,T,V</td><td>C</td><td>0x10122100</td><td rowspan="6">0x1000B5CF</td></tr>
<tr><td>D</td><td>0x10122200</td></tr>
<tr><td rowspan="2">A,C,E,G</td><td>C</td><td>0x10128100</td></tr>
<tr><td>D</td><td>0x10128200</td></tr>
<tr><td rowspan="2">B,D,F,H</td><td>C</td><td>0x10120100</td></tr>
<tr><td>D</td><td>0x10120200</td></tr>
</table>
Correct)
<table>
<tr><th>Function Digit</th><th>Revision</th><th>Chip ID</th><th>JTAG ID</th></tr>
<tr><td rowspan="2">S,U,T,V</td><td>C</td><td>0x10122100</td><td rowspan="6">0x1000B5CF</td></tr>
<tr><td>D, E</td><td>0x10122200</td></tr>
<tr><td rowspan="2">A,C,E,G</td><td>C</td><td>0x10128100</td></tr>
<tr><td>D, E</td><td>0x10128200</td></tr>
<tr><td rowspan="2">B,D,F,H</td><td>C</td><td>0x10120100</td></tr>
<tr><td>D, E,</td><td>0x10120200</td></tr>
</table></td></tr>
<tr><td>10</td><td>3: Product Description
3.2. Product Description</td><td>Feature: Clock
Error)
-

Correct)
Main Oscillation Stabilization Wait Time (at 4 MHz):8.19ms (Initial value)</td></tr>
<tr><td>10</td><td>3: Product Description
3.2. Product Description</td><td>Error)
-

Correct)
Feature: Embedded CR oscillation
See the TRAVEO™ T1G Platform Hardware Manual in detail.
Stabilization time is as followings.
− 0.35 ms to 0.8 ms for 4 MHz (Fast clock)
− 0.43 ms to 1.28 ms for 100 kHz (Slow clock)</td></tr>
</table>

Page	Section	Change Results
10	3: Product Description 3.2. Product Description	Feature: Reset Error) Based on Cortex R5F platform Following resets are not mounted on this device. – INITX – SRSTX Correct) RSTX pin + MD pin simultaneous assert INITX (Same as INITX pin input) – Occurrence factor: Simultaneously inputting “L” level to RSTX pin and inputting “L” level to MD pin – Release factor: Inputting “H” level to RSTX pin See the TRAVEO™ T1G Platform Hardware Manual in detail. Following resets are not mounted on this device. – SRSTX (and nSRST pin) The product series does not support EX5VRST and writing EX5VRSTCNT bits in SYSC0_SPECFGR has no effect.
11	3: Product Description 3.2. Product Description	Feature: PLL / SSCG PLL Error) Down spread mode is only supported and available. Correct) Product supports down spread and center spread modes with the conditions defined in 9.1.4.3 "Internal Clock Timing".
12	3: Product Description 3.2. Product Description	Feature: Embedded Program/Work Flash Memory Error) Work Flash can be accessed with 0-wait-cycle if CPU frequency is 12.5MHz or less. 7-wait-cycle: 80MHz or less. 13-wait-cycle: 160MHz or less. Correct) Work Flash can be accessed with 0-wait-cycle if CPU frequency is 12.5MHz or less. 6-wait-cycle: 80MHz or less. 12-wait-cycle: 160MHz or less.
12	3: Product Description 3.2. Product Description	Feature: Security Error) Chip erase function is available for flash memory. The function of "MK_CEER" is not supported. (MK_CEER = not selectable) For details, see the platform manual and chapter "Security" Correct) -

Page	Section	Change Results
13	3: Product Description 3.2. Product Description	Feature: Multi-Functional Serial (MFS) Error) Some ports of MFS have the dedicated I/O for I^2C. See Port description list in detail. When the voltage supply of I^2C interface is 5.0 V, it cannot use the I/O cells of 3.3 V voltage supply for the I^2C terminal. CTS/RTS is not mounted (hardware flow control is not supported for this series.) Correct) Only 2 ports of MFS have the dedicated I/O for I^2C. See I^2C timing in 9.1.4.6 Multi-Function Serial in detail. The I^2C is not designed to be hot swappable. CTS/RTS is not mounted (hardware flow control is not supported for this series.)
13	3: Product Description 3.2. Product Description	Feature: Hyper BUS I/F Error) The following register is not supported and cannot be used. − Controller Status Register (HYPERBUSIn_CSR) − Interrupt Status Register (HYPERBUSIn_ISR) − Write Protection Register (HYPERBUSIn_WPR) − Test Register (HYPERBUSIn_TEST) Correct) The following register is not supported and cannot be used. − Controller Status Register (HYPERBUSIn_CSR) − Interrupt Enable Register (HYPERBUSIn_IEN) − Interrupt Status Register (HYPERBUSIn_ISR) − Write Protection Register (HYPERBUSIn_WPR) − Test Register (HYPERBUSIn_TEST)

Page	Section	Change Results
258	9. Electric Characteristics 9.1.6.1 Electrical Characteristics	Error)

Parameter	Rating			Unit	Remarks
	Min	Typ	Max*3		
Sector erase time	-	120	180	ms	Large sector*1 Internal preprogramming time included
	-	120	180	ms	8kB sector*1 Internal preprogramming time included
	-	120	180	ms	4kB sector*1 Internal preprogramming time included
16bit write time(Program)	-	30	60	µs	System-level overhead time excluded*1
32bit write time(Program)	-	30	60	µs	System-level overhead time excluded*1
64bit write time(Program)	-	30	60	µs	System-level overhead time excluded*1
256bit write time(Program)	-	40	70	µs	System-level overhead time excluded*1
Page mode write time(Program)	-	320	600	µs	System-level overhead time excluded*1
32bit write time(Work)	-	30	60	µs	System-level overhead time excluded*1
Erase count / Data retention time(Program)*3	1,000/20 years	-	-	-	Temperature at write/erase time Average temperature T_A = +85 degrees Celsius
Erase count / Data retention time(Work)*3	1,000/20 years 10,000/10 years 100,000/5 years	-	-	-	Temperature at write/erase time Average temperature T_A = +85 degrees Celsius

*1: Guaranteed value for up to 1,000 erases

*2: Guaranteed value for up to 100,000 erases

*3: Target Value

Correct)

Parameter	Rating			Unit	Remarks
	Min	Typ	Max		
Sector erase time	-	120	180	ms	Large sector*1 Internal preprogramming time included
	-	120	180	ms	8kB sector*1 Internal preprogramming time included
	-	120	180	ms	4kB sector*2 Internal preprogramming time included
16bit write time(Program)	-	30	60	µs	System-level overhead time excluded*1
32bit write time(Program)	-	30	60	µs	System-level overhead time excluded*1
64bit write time(Program)	-	30	60	µs	System-level overhead time excluded*1
256bit write time(Program)	-	40	70	µs	System-level overhead time excluded*1
Page mode write time(Program)	-	320	600	µs	System-level overhead time excluded*1
32bit write time(Work)	-	30	60	µs	System-level overhead time excluded*2
Erase count / Data retention time(Program)	1,000/20 years	-	-	-	Temperature at write/erase time Average temperature T_A = +85 degrees Celsius
Erase count / Data retention time(Work)	1,000/20 years 10,000/10 years 100,000/5 years	-	-	-	Temperature at write/erase time Average temperature T_A = +85 degrees Celsius

*1: Guaranteed value for up to 1,000 erases

*2: Guaranteed value for up to 100,000 erases

Page	Section	Change Results
Rev. *G		
176	9. Electric Characteristics 9. 1.3 DC Characteristics	Added the Hysteresis voltage as below. Correct)

Parameter	Symbol	Pin Name	Conditions	Value			Unit	Remarks
				Min	Typ	Max		
Hysteresis voltage	V_{HYS1}	P0_00 to P0_20, P2_09 to P2_19, P3_00 to P3_07, P3_24 to P3_31, P4_00 to P4_07	CMOS hysteresis input level is selected	-	$0.05 \times V_{CC53}$	-	V	
	V_{HYS2}		Automotive input level is selected	-	$0.03 \times V_{CC53}$	-	V	
	V_{HYS3}		TTL input level is selected	-	0.035	-	V	
	V_{HYS4}	P1_03 to P1_16, P3_08 to P3_23, P4_08 to P4_23	CMOS hysteresis input level is selected	-	$0.05 \times V_{CC5}$	-	V	
	V_{HYS5}		Automotive input level is selected	-	$0.03 \times V_{CC5}$	-	V	
	V_{HYS6}	P1_09, P1_10, P1_15, P1_16	TTL input level is selected	-	0.035	-	V	
	V_{HYS7}	P1_17 to P1_31, P2_00 to P2_08, P4_24 to P4_31	CMOS hysteresis input level is selected	-	$0.05 \times D_{VCC}$	-	V	
	V_{HYS8}		Automotive input level is selected	-	$0.03 \times D_{VCC}$	-	V	
	V_{HYS9}	RSTX NMIX	-	-	$0.05 \times V_{CC5}$	-	V	
	V_{HYS10}	MD	-	-	$0.05 \times V_{CC5}$	-	V	
	V_{HYS11}	JTAG_NTRST JTAG_TCK JTAG_TDI JTAG_TMS	-	-	0.035	-	V	
	V_{HYS12}	P0_21 to P0_31, P1_00 to P1_02	CMOS hysteresis input level is selected	-	$0.05 \times V_{CC3}$	-	V	
	V_{HYS13}	P0_21 to P0_31	TTL input level is selected	-	0.035	-	V	

<table>
<tr><th>Page</th><th>Section</th><th>Change Results</th></tr>
<tr><td colspan="3">Rev. *H</td></tr>
<tr><td>4</td><td>1. Overview
1.2 Document Definition</td><td>Added the Document Definition as below.

Error)
<table>
<tr><th>Document Type</th><th>Definition</th><th>Primary User</th><th>Document Code</th></tr>
<tr><td>S6J3350 Datasheet</td><td>The function and its characteristics are specified quantitatively.</td><td>Investigator and hardware engineer</td><td>002-10634</td></tr>
<tr><td>S6J3300 Hardware Manual</td><td>The function and its operation of S6J3300 series are described.</td><td>Software engineer</td><td>002-10185</td></tr>
<tr><td>TRAVEO™ T1G Platform Hardware Manual</td><td>The function and its operation of CPU core platform are described.</td><td>Software engineer</td><td>002-07884</td></tr>
</table>
Correct)
<table>
<tr><th>Document Type</th><th>Definition</th><th>Primary User</th><th>Document Code</th></tr>
<tr><td>S6J3350 Datasheet</td><td>This document.

The function and its characteristics are specified quantitatively.</td><td>Investigator and hardware engineer</td><td>002-10634</td></tr>
<tr><td>S6J3300 Hardware Manual</td><td>S6J3300 Series 32-bit Microcontroller TRAVEO™ T1G Family Hardware Manual

The function and its operation of S6J3300 series are described.</td><td>Software engineer</td><td>002-10185</td></tr>
<tr><td>TRAVEO™ T1G Platform Hardware Manual</td><td>32-Bit Microcontroller TRAVEO™ T1G Family S6J33xx, S6J34xx, S6J35xx Series Hardware Manual Platform Part

The function and its operation of CPU core platform are described.</td><td>Software engineer</td><td>002-07884</td></tr>
</table></td></tr>
<tr><td>14</td><td>3: Product Description
3.2. Product Description</td><td>Deleted as below

-Note: The description of the preliminary documentation will be changed without any notification.</td></tr>
</table>

Page	Section	Change Results
188	9. Electric Characteristics 9.1.4.3 Internal Clock Timing	Added the *4 in “Remarks” column Error) SSCG0 output clock SSCG1 output clock SSCG2 output clock SSCG3 output clock PLL0 output clock PLL1 output clock PLL2 output clock PLL3 output clock Correct) SSCG0 output clock *4 SSCG1 output clock *4 SSCG2 output clock *4 SSCG3 output clock *4 PLL0 output clock *4 PLL1 output clock *4 PLL2 output clock *4 PLL3 output clock *4
189	9. Electric Characteristics 9.1.4.3 Internal Clock Timing	Added the below *4 sentence. Error) (none) Correct) *4: The PLLx/SSCGx cannot set under 200MHz.
196, 199, 202, 205, 208, 211, 214, 217, 248	9. Electric Characteristics 9.1.4 AC Characteristics	Modified the shading document name as below. Error) *For details, see the hardware manual.* Correct) *For details, see the TRAVEO™ T1G Platform Hardware Manual.*
228	9. Electric Characteristics 9.1.4 AC Characteristics	Modified the shading document name as below. Error) *Please refer to Product Hardware Manual for available list.* Correct) *Please refer to S6J3300 series Hardware Manual for available list.*

<table>
<tr><th>Page</th><th>Section</th><th>Change Results</th></tr>
<tr><td>261</td><td>11. Ordering Information</td><td>Revised as below.

Error)
<table><tr><th>Part Number *1</th><th>Package</th></tr><tr><td>S6J335EKSx*******</td><td>208-pin plastic TEQFP(LEW208)</td></tr></table>
Correct)
<table><tr><th>Part Number *1</th><th>Package</th></tr><tr><td>S6J335EKSCSE2000A</td><td rowspan="3">208-pin plastic TEQFP(LEW208)</td></tr><tr><td>S6J335EKSESE20000</td></tr><tr><td>S6J335EKBESE20000</td></tr><tr><td>S6J335EJBESE20000</td><td>176-pin plastic TEQFP(LEV176)</td></tr></table></td></tr>
<tr><td colspan="3">Rev. *I</td></tr>
<tr><td>11</td><td>3. Product Description
3.2 Product Description
Table 3-1: Product Features</td><td>Added the below

Correct)
<table><tr><th>Feature</th><th>Description</th></tr><tr><td>A/D Converter</td><td>AN39 to AN63 are not support for S6J335xxAx, S6J335xxCx, S6J335xxEx, and S6J335xxGx option.</td></tr></table></td></tr>
</table>

<table>
<tr><th>Page</th><th>Section</th><th>Change Results</th></tr>
<tr><td>13</td><td>CHAPTER 3: Product Description
3.2.1. Ethernet</td><td>Deleted the shading parts as below:

Error)
<table>
<tr><th>Functions</th><th>Remark</th></tr>
<tr><td>Direct Memory Access Interface.
- partial store and forward
- force max amba burst tx/rc
- Priority Queueing (Screening)</td><td></td></tr>
<tr><td>External FIFO Interface</td><td></td></tr>
<tr><td>Additional Low Latency TX FIFO Interface for DMA configurations</td><td></td></tr>
<tr><td>MAC Transmit Block
- half-duplex
- collision
- back_pressure</td><td></td></tr>
<tr><td>MAC Filtering Block
- external address match
- VLAN tag
- Wakeup On Lan</td><td></td></tr>
<tr><td>IEEE 1588 and IEEE 802.1AS Support</td><td></td></tr>
<tr><td>MAC PFC Priority Based Pause Frame Support</td><td></td></tr>
<tr><td>Energy Efficient Ethernet support</td><td></td></tr>
<tr><td>LPI Operation in Cadence IP</td><td></td></tr>
<tr><td>802.1Qav Support – Credit Based Shaping</td><td></td></tr>
<tr><td>PHY Interface
- GMII
- SGMII
- TBI</td><td></td></tr>
<tr><td>10/100/1000 Operation
- 10 M
- 1000 M</td><td></td></tr>
<tr><td>SGMII Operation</td><td></td></tr>
<tr><td>Jumbo Frames</td><td></td></tr>
<tr><td>Physical Control Sub-Layer</td><td></td></tr>
</table>
Correct)
<table>
<tr><th>Functions</th><th>Remark</th></tr>
<tr><td>External FIFO Interface</td><td></td></tr>
<tr><td>Additional Low Latency TX FIFO Interface for DMA configurations</td><td></td></tr>
<tr><td>MAC Transmit Block
- half-duplex
- collision
- back_pressure</td><td></td></tr>
<tr><td>MAC Filtering Block
- external address match
- Wakeup On Lan</td><td></td></tr>
<tr><td>Energy Efficient Ethernet support</td><td></td></tr>
<tr><td>LPI Operation in Cadence IP</td><td></td></tr>
<tr><td>PHY Interface
- GMII
- SGMII
- TBI</td><td></td></tr>
<tr><td>10/100/1000 Operation
- 1000 M</td><td></td></tr>
<tr><td>SGMII Operation</td><td></td></tr>
<tr><td>Jumbo Frames</td><td></td></tr>
<tr><td>Physical Control Sub-Layer</td><td></td></tr>
</table></td></tr>
</table>

<table>
<tr><th>Page</th><th>Section</th><th>Change Results</th></tr>
<tr><td>37</td><td>6. Port Description
6.1 Port Description List</td><td>Revised the below

Error)
<table>
<tr><th rowspan="2">Port Name</th><th rowspan="2">Description</th><th colspan="3">Package Pin Number</th><th rowspan="2">Remark</th></tr>
<tr><th>TEQFP 144</th><th>TEQFP 176</th><th>TEQFP 208</th></tr>
<tr><td>PPG0_TOUT0_1</td><td>Base timer 1 output pin (1)</td><td>8</td><td>8</td><td>11</td><td></td></tr>
</table>
Correct)
<table>
<tr><th rowspan="2">Port Name</th><th rowspan="2">Description</th><th colspan="3">Package Pin Number</th><th rowspan="2">Remark</th></tr>
<tr><th>TEQFP 144</th><th>TEQFP 176</th><th>TEQFP 208</th></tr>
<tr><td>PPG0_TOUT0_1</td><td>Base timer 0 output pin (1)</td><td>8</td><td>8</td><td>11</td><td></td></tr>
</table></td></tr>
<tr><td>37</td><td>6. Port Description
6.1 Port Description List</td><td>Revised the below

Error)
<table>
<tr><th rowspan="2">Port Name</th><th rowspan="2">Description</th><th colspan="3">Package Pin Number</th><th rowspan="2">Remark</th></tr>
<tr><th>TEQFP 144</th><th>TEQFP 176</th><th>TEQFP 208</th></tr>
<tr><td>PPG5_TOUT0_1</td><td>Base timer 11 output pin (1)</td><td>-</td><td>21</td><td>27</td><td></td></tr>
</table>
Correct)
<table>
<tr><th rowspan="2">Port Name</th><th rowspan="2">Description</th><th colspan="3">Package Pin Number</th><th rowspan="2">Remark</th></tr>
<tr><th>TEQFP 144</th><th>TEQFP 176</th><th>TEQFP 208</th></tr>
<tr><td>PPG5_TOUT0_1</td><td>Base timer 10 output pin (1)</td><td>-</td><td>21</td><td>27</td><td></td></tr>
</table></td></tr>
<tr><td>37</td><td>6. Port Description
6.1 Port Description List</td><td>Revised the below

Error)
<table>
<tr><th rowspan="2">Port Name</th><th rowspan="2">Description</th><th colspan="3">Package Pin Number</th><th rowspan="2">Remark</th></tr>
<tr><th>TEQFP 144</th><th>TEQFP 176</th><th>TEQFP 208</th></tr>
<tr><td>PPG10_TOUT0_1</td><td>Base timer 21 output pin (1)</td><td>-</td><td>98</td><td>114</td><td></td></tr>
</table>
Correct)
<table>
<tr><th rowspan="2">Port Name</th><th rowspan="2">Description</th><th colspan="3">Package Pin Number</th><th rowspan="2">Remark</th></tr>
<tr><th>TEQFP 144</th><th>TEQFP 176</th><th>TEQFP 208</th></tr>
<tr><td>PPG10_TOUT0_1</td><td>Base timer 20 output pin (1)</td><td>-</td><td>98</td><td>114</td><td></td></tr>
</table></td></tr>
</table>

<table>
<tr><th>Page</th><th>Section</th><th>Change Results</th></tr>
<tr><td>37</td><td>6. Port Description
6.1 Port Description List</td><td>Revised the below

Error)
<table>
<tr><th rowspan="2">Port Name</th><th rowspan="2">Description</th><th colspan="3">Package Pin Number</th><th rowspan="2">Remark</th></tr>
<tr><th>TEQFP 144</th><th>TEQFP 176</th><th>TEQFP 208</th></tr>
<tr><td>PPG15_TOUT0_1</td><td>Base timer 31 output pin (1)</td><td>-</td><td>163</td><td>195</td><td></td></tr>
</table>
Correct)
<table>
<tr><th rowspan="2">Port Name</th><th rowspan="2">Description</th><th colspan="3">Package Pin Number</th><th rowspan="2">Remark</th></tr>
<tr><th>TEQFP 144</th><th>TEQFP 176</th><th>TEQFP 208</th></tr>
<tr><td>PPG15_TOUT0_1</td><td>Base timer 30 output pin (1)</td><td>-</td><td>163</td><td>195</td><td></td></tr>
</table></td></tr>
<tr><td>258 to 259</td><td>12. Errata</td><td>Added section “12. Errata”.</td></tr>
<tr><td colspan="3">Rev. *J</td></tr>
<tr><td>6</td><td>2. Function List
2.2. Optional Function</td><td>Revised the shading parts as below:

Figure 2-1: Option and Part Number for S6J3310/20/30/40 Series

Error)
Option:
<table>
<tr><th>Digit</th><th>SHE</th><th>MK_CEER*</th><th>VCC</th><th>DVCC</th></tr>
<tr><td>:</td><td>:</td><td>:</td><td>:</td><td>:</td></tr>
</table>
Correct)
Option:
<table>
<tr><th>Digit</th><th>SHE</th><th>MK_CEER*</th><th>VCC5</th><th>DVCC</th></tr>
<tr><td>:</td><td>:</td><td>:</td><td>:</td><td>:</td></tr>
</table></td></tr>
</table>

<table>
<tr><th>Page</th><th>Section</th><th>Change Results</th></tr>
<tr><td>9</td><td>3. Product Description
3.2. Product Description</td><td>Revised the shading parts as below:

Table 3-1: Product Features

Error)
<table><tr><th>Feature</th><th>Description</th></tr><tr><td>Embedded CR oscillation</td><td>See the TRAVEO™ T1G Platform Hardware Manual in detail.
Stabilization time is as followings.
− 0.35 ms to 0.8 ms for 4 MHz (Fast clock)
− 0.43 ms to 1.28 ms for 100 kHz (Slow clock)</td></tr></table>
Correct)
<table><tr><th>Feature</th><th>Description</th></tr><tr><td>Embedded CR oscillation</td><td>See the TRAVEO™ T1G Platform Hardware Manual in detail.
Stabilization time is as followings.
− 30 us or more for 4 MHz (Fast CR clock)
− 30 us or more for 100 kHz (Slow CR clock)</td></tr></table></td></tr>
</table>

<table>
<tr><th>Page</th><th>Section</th><th>Change Results</th></tr>
<tr><td>10</td><td>3. Product Description
3.2. Product Description</td><td>
Revised the shading parts as below:

Table 3-1: Product Features

Error)
<table>
<tr><th>Feature</th><th>Description</th></tr>
<tr><td>PLL / SSCG PLL</td><td>See the TRAVEO™ T1G Platform Hardware Manual in detail.
Use case assumption is following.
PLL
– Sound system clock
– Sound frequency master clock
– Peripherals
– Display clock
– Trace clock

SSCG
– CPU core
– GDC core
– Hyper BUS
– DDR-HSSPI
Product supports down spread and center spread modes with the conditions defined in 9.1.4.3 “Internal Clock Timing”.</td></tr>
</table>
Correct)
<table>
<tr><th>Feature</th><th>Description</th></tr>
<tr><td>PLL / SSCG PLL</td><td>See the TRAVEO™ T1G Platform Hardware Manual in detail.
Use case assumption is following.
PLL
– Sound system clock
– Sound frequency master clock
– Peripherals
– Display clock
– Trace clock

SSCG
– CPU core
– GDC core
– Hyper BUS
– DDR-HSSPI
Product supports down spread and center spread modes with the conditions defined in 9.1.4.3 “Internal Clock Timing”.

Stabilization time is as follows.
– 100 us for PLL
– 200 us for SSCG</td></tr>
</table>
</td></tr>
</table>

<table>
<tr><th>Page</th><th>Section</th><th>Change Results</th></tr>
<tr><td>14</td><td>4. Package and Pin Assignment
4.1.1. TEQFP-208 Pin Assignment</td><td>Removed the shading parts as below:

Package Pin 103

Error)
X1A / P1_12 / EINT13_0 / PPG4_TOUT2_0 / OCU8_OTD1_0 / ICU9_IN1_0 / TOT17_0 / TX2_0 / SCS161_0

Correct)
X1A / P1_12 / EINT13_0 / OCU8_OTD1_0 / ICU9_IN1_0 / TOT17_0 / TX2_0 / SCS161_0</td></tr>
<tr><td>15</td><td>4. Package and Pin Assignment
4.1.2. TEQFP-176 Pin Assignment</td><td>Removed the shading parts as below:

Package Pin 87

Error)
X1A / P1_12 / EINT13_0 / PPG4_TOUT2_0 / OCU8_OTD1_0 / ICU9_IN1_0 / TOT17_0 / TX2_0 / SCS161_0

Correct)
X1A / P1_12 / EINT13_0 / OCU8_OTD1_0 / ICU9_IN1_0 / TOT17_0 / TX2_0 / SCS161_0</td></tr>
<tr><td>16</td><td>4. Package and Pin Assignment
4.1.3. TEQFP-144 Pin Assignment</td><td>Removed the shading parts as below:

Package Pin 71

Error)
X1A / P1_12 / EINT13_0 / PPG4_TOUT2_0 / OCU8_OTD1_0 / ICU9_IN1_0 / TOT17_0 / TX2_0 / SCS161_0

Correct)
X1A / P1_12 / EINT13_0 / OCU8_OTD1_0 / ICU9_IN1_0 / TOT17_0 / TX2_0 / SCS161_0</td></tr>
<tr><td>35</td><td>6. Port Description
6.1. Port Description List</td><td>Removed the shading parts as below:

Error)
<table>
<tr><th rowspan="2">Port Name</th><th rowspan="2">Description</th><th colspan="3">Package Pin Number</th><th rowspan="2">Remark</th></tr>
<tr><th>TEQFP 144</th><th>TEQFP 176</th><th>TEQFP 208</th></tr>
<tr><td>PPG4_TOUT0_0</td><td>Base timer 8 output pin (0)</td><td>70</td><td>86</td><td>102</td><td></td></tr>
<tr><td>PPG4_TOUT2_0</td><td>Base timer 9 output pin (0)</td><td>71</td><td>87</td><td>103</td><td></td></tr>
<tr><td>PPG5_TOUT0_0</td><td>Base timer 10 output pin (0)</td><td>87</td><td>111</td><td>128</td><td></td></tr>
</table>

Correct)
<table>
<tr><th rowspan="2">Port Name</th><th rowspan="2">Description</th><th colspan="3">Package Pin Number</th><th rowspan="2">Remark</th></tr>
<tr><th>TEQFP 144</th><th>TEQFP 176</th><th>TEQFP 208</th></tr>
<tr><td>PPG4_TOUT0_0</td><td>Base timer 8 output pin (0)</td><td>70</td><td>86</td><td>102</td><td></td></tr>
<tr><td>PPG5_TOUT0_0</td><td>Base timer 10 output pin (0)</td><td>87</td><td>111</td><td>128</td><td></td></tr>
</table>
</td></tr>
</table>

<table>
<tr><th>Page</th><th>Section</th><th>Change Results</th></tr>
<tr><td>38</td><td>6. Port Description
6.1. Port Description List</td><td>Revised the shading parts as below:

Error)
<table>
<tr><th rowspan="2">Port Name</th><th rowspan="2">Description</th><th colspan="3">Package Pin Number</th><th rowspan="2">Remark</th></tr>
<tr><th>TEQFP 144</th><th>TEQFP 176</th><th>TEQFP 208</th></tr>
<tr><td>TIN0_1</td><td>Reload timer ch.0 event input pin (0)</td><td>-</td><td>69</td><td>81</td><td></td></tr>
</table>
Correct)
<table>
<tr><th rowspan="2">Port Name</th><th rowspan="2">Description</th><th colspan="3">Package Pin Number</th><th rowspan="2">Remark</th></tr>
<tr><th>TEQFP 144</th><th>TEQFP 176</th><th>TEQFP 208</th></tr>
<tr><td>TIN0_1</td><td>Reload timer ch.0 event input pin (1)</td><td>-</td><td>69</td><td>81</td><td></td></tr>
</table>
</td></tr>
</table>

<table>
<tr><th>Page</th><th>Section</th><th>Change Results</th></tr>
<tr><td>125</td><td>7. Port Configuration
7.1 Resource Input Configuration Module
7.1.1. RIC</td><td>
Removed the shading parts as below:

Error)
<table>
<tr><td rowspan="4">RIC_RESIN521 (0x0412)</td><td rowspan="4">ADC12B0_HWTRG31</td><td>RESSEL (0-7)</td><td>PORT_PIN</td><td>RLT17_UFSET</td><td>RLT1_UFSET</td><td>OCU1_OTD0</td><td>OCU2_OTD0</td><td>PPG15_TOUT2</td><td>PPG17_TOUT0</td><td>PPG19_TOUT0</td></tr>
<tr><td>RESSEL (8-15)</td><td>-</td><td>-</td><td>-</td><td>-</td><td>-</td><td>-</td><td>-</td><td>-</td></tr>
<tr><td>PORTSEL (0-7)</td><td>-</td><td>-</td><td>-</td><td>-</td><td>-</td><td>-</td><td>-</td><td>-</td></tr>
<tr><td>PORTSEL (8-15)</td><td>-</td><td>-</td><td>-</td><td>-</td><td>-</td><td>-</td><td>-</td><td>-</td></tr>
<tr><td rowspan="4">RIC_RESIN522 (0x0414)</td><td rowspan="4">ADC12B0_HWTRG32</td><td>RESSEL (0-7)</td><td>PORT_PIN</td><td>RLT0_UFSET</td><td>RLT17_UFSET</td><td>OCU2_OTD0</td><td>OCU8_OTD0</td><td>PPG16_TOUT0</td><td>PPG17_TOUT2</td><td>PPG19_TOUT2</td></tr>
<tr><td>RESSEL (8-15)</td><td>-</td><td>-</td><td>-</td><td>-</td><td>-</td><td>-</td><td>-</td><td>-</td></tr>
<tr><td>PORTSEL (0-7)</td><td>-</td><td>-</td><td>-</td><td>-</td><td>-</td><td>-</td><td>-</td><td>-</td></tr>
<tr><td>PORTSEL (8-15)</td><td>-</td><td>-</td><td>-</td><td>-</td><td>-</td><td>-</td><td>-</td><td>-</td></tr>
<tr><td>:</td><td>:</td><td>:</td><td>:</td><td>:</td><td>:</td><td>:</td><td>:</td><td>:</td><td>:</td></tr>
<tr><td rowspan="4">RIC_RESIN585 (0x0492)</td><td rowspan="4">ADC12B1_HWTRG31</td><td>RESSEL (0-7)</td><td>PORT_PIN</td><td>RLT17_UFSET</td><td>RLT1_UFSET</td><td>OCU1_OTD0</td><td>OCU2_OTD0</td><td>PPG15_TOUT2</td><td>PPG17_TOUT0</td><td>PPG19_TOUT0</td></tr>
<tr><td>RESSEL (8-15)</td><td>-</td><td>-</td><td>-</td><td>-</td><td>-</td><td>-</td><td>-</td><td>-</td></tr>
<tr><td>PORTSEL (0-7)</td><td>-</td><td>-</td><td>-</td><td>-</td><td>-</td><td>-</td><td>-</td><td>-</td></tr>
<tr><td>PORTSEL (8-15)</td><td>-</td><td>-</td><td>-</td><td>-</td><td>-</td><td>-</td><td>-</td><td>-</td></tr>
<tr><td rowspan="4">RIC_RESIN586 (0x0494)</td><td rowspan="4">ADC12B1_HWTRG32</td><td>RESSEL (0-7)</td><td>PORT_PIN</td><td>RLT0_UFSET</td><td>RLT17_UFSET</td><td>OCU2_OTD0</td><td>OCU8_OTD0</td><td>PPG16_TOUT0</td><td>PPG17_TOUT2</td><td>PPG19_TOUT2</td></tr>
<tr><td>RESSEL (8-15)</td><td>-</td><td>-</td><td>-</td><td>-</td><td>-</td><td>-</td><td>-</td><td>-</td></tr>
<tr><td>PORTSEL (0-7)</td><td>-</td><td>-</td><td>-</td><td>-</td><td>-</td><td>-</td><td>-</td><td>-</td></tr>
<tr><td>PORTSEL (8-15)</td><td>-</td><td>-</td><td>-</td><td>-</td><td>-</td><td>-</td><td>-</td><td>-</td></tr>
</table>

Correct)
<table>
<tr><td rowspan="4">RIC_RESIN521 (0x0412)</td><td rowspan="4">ADC12B0_HWTRG31</td><td>RESSEL (0-7)</td><td>PORT_PIN</td><td>RLT17_UFSET</td><td>RLT1_UFSET</td><td>OCU1_OTD0</td><td>OCU2_OTD0</td><td>PPG15_TOUT2</td><td>PPG17_TOUT0</td><td>PPG19_TOUT0</td></tr>
<tr><td>RESSEL (8-15)</td><td>-</td><td>-</td><td>-</td><td>-</td><td>-</td><td>-</td><td>-</td><td>-</td></tr>
<tr><td>PORTSEL (0-7)</td><td>-</td><td>-</td><td>-</td><td>-</td><td>-</td><td>-</td><td>-</td><td>-</td></tr>
<tr><td>PORTSEL (8-15)</td><td>-</td><td>-</td><td>-</td><td>-</td><td>-</td><td>-</td><td>-</td><td>-</td></tr>
<tr><td rowspan="4">RIC_RESIN586 (0x0494)</td><td rowspan="4">ADC12B1_HWTRG32</td><td>RESSEL (0-7)</td><td>PORT_PIN</td><td>RLT0_UFSET</td><td>RLT17_UFSET</td><td>OCU2_OTD0</td><td>OCU8_OTD0</td><td>PPG16_TOUT0</td><td>PPG17_TOUT2</td><td>PPG19_TOUT2</td></tr>
<tr><td>RESSEL (8-15)</td><td>-</td><td>-</td><td>-</td><td>-</td><td>-</td><td>-</td><td>-</td><td>-</td></tr>
<tr><td>PORTSEL (0-7)</td><td>-</td><td>-</td><td>-</td><td>-</td><td>-</td><td>-</td><td>-</td><td>-</td></tr>
<tr><td>PORTSEL (8-15)</td><td>-</td><td>-</td><td>-</td><td>-</td><td>-</td><td>-</td><td>-</td><td>-</td></tr>
</table>
</td></tr>
<tr><td>138</td><td>CHAPTER 7: Port Configuration
7.2. Port Output Function Configuration
7.2.1. Standard Configuration</td><td>
Revised the shading parts as below:

Error)
<table>
<tr><td rowspan="2">Register (Offset)</td><td rowspan="2">Port</td><td colspan="8">Resource Functional Outputs</td></tr>
<tr><td>POF = 0</td><td>POF = 1</td><td>POF = 2</td><td>POF = 3</td><td>POF = 4</td><td>POF = 5</td><td>POF = 6</td><td>POF = 7</td></tr>
<tr><td>PPC_PCFGR112 (0x0058)</td><td>P1_12</td><td>GPIO_PODR1:POD12</td><td>SCS161_0</td><td>-</td><td>-</td><td>OCU8_OTD1_0</td><td>TOT17_0</td><td>PPG4_TOUT2_0</td><td>TX2_0</td></tr>
</table>

Correct)
<table>
<tr><td rowspan="2">Register (Offset)</td><td rowspan="2">Port</td><td colspan="8">Resource Functional Outputs</td></tr>
<tr><td>POF = 0</td><td>POF = 1</td><td>POF = 2</td><td>POF = 3</td><td>POF = 4</td><td>POF = 5</td><td>POF = 6</td><td>POF = 7</td></tr>
<tr><td>PPC_PCFGR112 (0x0058)</td><td>P1_12</td><td>GPIO_PODR1:POD12</td><td>SCS161_0</td><td>-</td><td>-</td><td>OCU8_OTD1_0</td><td>TOT17_0</td><td>-</td><td>TX2_0</td></tr>
</table>
</td></tr>
</table>

Page	Section	Change Results
152	9. Electric Characteristics 9.1. Electrical Characteristics 9.1.1. Absolute Maximum Rating	Added the shading parts as below: Error) *2 Take care that DVCC, AVCC5 do not exceed VCC5 at, for example, the power-on time. Correct) *2 Take care that DVCC, AVCC5 do not exceed VCC5 at, for example, the power-on time. For S6J33xxxAx or S6J33xxxCx or S6J33xxxEx or S6J33xxxGx option, take care that AVCC5 do not exceed VCC5 at, for example, the power-on time.
173	9. Electric Characteristics 9.1. Electrical Characteristics 9.1.4. AC Characteristics 9.1.4.3. Internal Clock Timing	Revised the shading parts as below: Error) - "Unused" means a clock source which doesn't have any supply destinations. Configure it as disable with performing at the lower clock frequency than the described maximum. Correct) - "Unused" means a clock source which doesn't have any supply destinations. Configure these clocks to a lower clock frequency than the described maximum.
Rev. *K		
245, 247	12. Errata	Added about CAN FD controller message order inversion when transmitting from dedicated Tx Buffers configured with same Message ID
Rev. *L		
245, 247, 248	12. Errata	Added about CAN FD incomplete description of Dedicated Tx Buffers and Tx Queue related to transmission from multiple buffers configured with the same Message ID

NOTE: Please see "Document History" about later revised information.

Document History

Document Title: S6J3350 Series 32-bit Microcontroller TRAVEO™ T1G Family
Document Number: 002-10634

Revision	ECN	Submission Date	Description of Change
**	5063970	01/25/2016	New Spec.
*A	5203759	04/05/2016	Correct device revision, Chip ID, LVD spec, DDR-HSSPI spec, and Hyper BUS spec For detail, see “Major Changes”.
*B	5371721	07/25/2016	Additional Internal operation clock frequency comments, LVD comments, and ADC Units vs channel comments The package dimension of TEQFP144 (0.4mm Pitch) correct from the provisional version to the formal version. TYPO: I2C Fast Mode For detail, see “Major Changes”
*C	5622195	02/07/2017	- ID add -I_{CCT}, I_{CCH} spec add -Power and RSTX sequence add -Ordering Information revise For detail, see “Major Changes”
*D	5782707	06/26/2017	-Delete product lineup of flash memory size 2MB and 1.5MB(Digit C and B) -Special spec of total maximum clamp current add -Icc12, Icch12 spec change -Power sequence add -Flash write/erase spec change For detail, see “Major Changes”
*E	5952291	10/31/2017	-Revision change -Power supply current for S6J33xxxxE add -Ordering Information change For detail, see “Major Changes”
*F	5971701	11/22/2017	-Function list and Product Description change For detail, see “Major Changes”
*G	6069450	02/19/2018	-Hysteresis voltage add in DC Characteristics For detail, see “Major Changes”
*H	6166795	05/07/2018	-Document Definition change -PLLx/SSCGx minimum clock frequencies add in Internal Clock Timing. -Ordering Information change For detail, see “Major Changes”

Revision	ECN	Submission Date	Description of Change
*I	6300353	09/05/2018	- Add an option limitation for Description of A/D Converter of Product Description. - Update Ethernet Support Functions. - Update Base timer allocation - Added 12. Errata For detail, see “Major Changes”
*J	6943828	08/05/2020	- Updated some sentences. For detail, see “Major Changes”.
*K	7100628	03/25/2021	Updated 12. Errata. For details, see 14. Major Changes.
*L	7402998	10/27/2021	Updated 12. Errata. For details, see 14. Major Changes.
*M	8087419	11/12/2024	Replaced the package diagram spec 002-11502 by Z8B00255860, 002-12477 by Z8B00254814, 002-13553 by Z8B00254330 and 002-13653 by Z8B00254490. Completing ECN Sunset review.

Sales, Solutions, and Legal Information

Worldwide Sales and Design Support

Cypress maintains a worldwide network of offices, solution centers, manufacturer's representatives, and distributors. To find the office closest to you, visit us at Cypress Locations.

Products

Arm® Cortex® Microcontrollers	cypress.com/arm
Automotive	cypress.com/automotive
Clocks & Buffers	cypress.com/clocks
Interface	cypress.com/interface
Internet of Things	cypress.com/iot
Memory	cypress.com/memory
Microcontrollers	cypress.com/mcu
PSoC	cypress.com/psoc
Power Management ICs	cypress.com/pmic
Touch Sensing	cypress.com/touch
USB Controllers	cypress.com/usb
Wireless Connectivity	cypress.com/wireless

PSoC® Solutions

PSoC 1 | PSoC 3 | PSoC 4 | PSoC 5LP | PSoC 6 MCU

Cypress Developer Community

Community | Code Examples | Projects | Videos | Blogs | Training| Components

Technical Support

cypress.com/support

Arm® and Cortex® are registered trademarks of Arm Limited (or its subsidiaries) in the US and/or elsewhere.

© Cypress Semiconductor Corporation, 2016-2024. This document is the property of Cypress Semiconductor Corporation, and Infineon Technologies company, and its affiliates ("Cypress"). This document, including any software or firmware included or referenced in this document ("Software"), is owned by Cypress under the intellectual property laws and treaties of the United States and other countries worldwide. Cypress reserves all rights under such laws and treaties and does not, except as specifically stated in this paragraph, grant any license under its patents, copyrights, trademarks, or other intellectual property rights. If the Software is not accompanied by a license agreement and you do not otherwise have a written agreement with Cypress governing the use of the Software, then Cypress hereby grants you a personal, non-exclusive, nontransferable license (without the right to sublicense) (1) under its copyright rights in the Software (a) for Software provided in source code form, to modify and reproduce the Software solely for use with Cypress hardware products, only internally within your organization, and (b) to distribute the Software in binary code form externally to end users (either directly or indirectly through resellers and distributors), solely for use on Cypress hardware product units, and (2) under those claims of Cypress's patents that are infringed by the Software (as provided by Cypress, unmodified) to make, use, distribute, and import the Software solely for use with Cypress hardware products. Any other use, reproduction, modification, translation, or compilation of the Software is prohibited.

TO THE EXTENT PERMITTED BY APPLICABLE LAW, CYPRESS MAKES NO WARRANTY OF ANY KIND, EXPRESS OR IMPLIED, WITH REGARD TO THIS DOCUMENT OR ANY SOFTWARE OR ACCOMPANYING HARDWARE, INCLUDING, BUT NOT LIMITED TO, THE IMPLIED WARRANTIES OF MERCHANTABILITY AND FITNESS FOR A PARTICULAR PURPOSE. No computing device can be absolutely secure. Therefore, despite security measures implemented in Cypress hardware or software products, Cypress shall have no liability arising out of any security breach, such as unauthorized access to or use of a Cypress product. CYPRESS DOES NOT REPRESENT, WARRANT, OR GUARANTEE THAT CYPRESS PRODUCTS, OR SYSTEMS CREATED USING CYPRESS PRODUCTS, WILL BE FREE FROM CORRUPTION, ATTACK, VIRUSES, INTERFERENCE, HACKING, DATA LOSS OR THEFT, OR OTHER SECURITY INTRUSION (collectively, "Security Breach"). Cypress disclaims any liability relating to any Security Breach, and you shall and hereby do release Cypress from any claim, damage, or other liability arising from any Security Breach. In addition, the products described in these materials may contain design defects or errors known as errata which may cause the product to deviate from published specifications. To the extent permitted by applicable law, Cypress reserves the right to make changes to this document without further notice. Cypress does not assume any liability arising out of the application or use of any product or circuit described in this document. Any information provided in this document, including any sample design information or programming code, is provided only for reference purposes. It is the responsibility of the user of this document to properly design, program, and test the functionality and safety of any application made of this information and any resulting product. "High-Risk Device" means any device or system whose failure could cause personal injury, death, or property damage. Examples of High-Risk Devices are weapons, nuclear installations, surgical implants, and other medical devices. "Critical Component" means any component of a High-Risk Device whose failure to perform can be reasonably expected to cause, directly or indirectly, the failure of the High-Risk Device, or to affect its safety or effectiveness. Cypress is not liable, in whole or in part, and you shall and hereby do release Cypress from any claim, damage, or other liability arising from any use of a Cypress product as a Critical Component in a High-Risk Device. You shall indemnify and hold Cypress, including its affiliates, and its directors, officers, employees, agents, distributors, and assigns harmless from and against all claims, costs, damages, and expenses, arising out of any claim, including claims for product liability, personal injury or death, or property damage arising from any use of a Cypress product as a Critical Component in a High-Risk Device. Cypress products are not intended or authorized for use as a Critical Component in any High-Risk Device except to the limited extent that (i) Cypress's published data sheet for the product explicitly states Cypress has qualified the product for use in a specific High-Risk Device, or (ii) Cypress has given you advance written authorization to use the product as a Critical Component in the specific High-Risk Device and you have signed a separate indemnification agreement.

Cypress, the Cypress logo, and combinations thereof, WICED, ModusToolBox, PSoC, CapSense, EZ-USB, F-RAM, and Traveo are trademarks or registered trademarks of Cypress or a subsidiary of Cypress in the United States or in other countries. For a more complete list of Cypress trademarks, visit cypress.com. Other names and brands may be claimed as property of their respective owners.