Please note that Cypress is an Infineon Technologies Company.
The document following this cover page is marked as “Cypress” document as this is the company that originally developed the product. Please note that Infineon will continue to offer the product to new and existing customers as part of the Infineon product portfolio.

Continuity of document content
The fact that Infineon offers the following product as part of the Infineon product portfolio does not lead to any changes to this document. Future revisions will occur when appropriate, and any changes will be set out on the document history page.

Continuity of ordering part numbers
Infineon continues to support existing part numbers. Please continue to use the ordering part numbers listed in the datasheet for ordering.

S29JL064H

64 Mbit (8 M x 8-Bit/4 M x 16-Bit), 3 V Simultaneous Read/Write Flash

This product family has been retired and is not recommended for designs. For new and current designs, the S29JL064J supersedes the S29JL064H. This is the factory-recommended migration path. Please refer to the S29JL064J data sheet for specifications and ordering information. Availability of this document is retained for reference and historical purposes only

Distinctive Characteristics

Architectural Advantages

- Simultaneous Read/Write operations
  - Data can be continuously read from one bank while executing erase/program functions in another bank
  - Zero latency between read and write operations
- Flexible Bank architectUre
  - Read may occur in any of the three banks not being written or erased
  - Four banks may be grouped by customer to achieve desired bank divisions
- Boot Sectors
  - Top and bottom boot sectors in the same device
  - Any combination of sectors can be erased
- Manufactured on 0.13 µm Process Technology
- Secured Silicon Sector: **Extra 256-byte Sector**
  - *Factory locked and identifiable:* 16 bytes available for secure, random factory Electronic Serial Number; verifiable as factory locked through autoselect function
  - *Customer lockable:* One-time programmable only. Once locked, data cannot be changed
- Zero Power Operation
  - Sophisticated power management circuits reduce power consumed during inactive periods to nearly zero
- Compatible with JEDEC Standards
  - Pinout and software compatible with single-power-supply flash standard

Package options

- 63-ball Fine Pitch BGA
- 48-pin TSOP

Performance Characteristics

- High Performance
  - Access time as fast as 55 ns
  - Program time: 4 µs/word typical using accelerated programming function
- Ultra Low Power Consumption (typical values)
  - 2 mA active read current at 1 MHz
  - 10 mA active read current at 5 MHz
  - 200 nA in standby or automatic sleep mode
- Cycling Endurance: 1 Million Cycles per Sector Typical
- Data Retention: 20 years typical

Software Features

- Supports Common Flash Memory Interface (CFI)
- Erase Suspend/Erase Resume
  - Suspends erase operations to read data from, or program data to, a sector that is not being erased, then resumes the erase operation
- Data# Polling and Toggle Bits
  - Provides a software method of detecting the status of program or erase cycles
- Unlock Bypass Program Command
  - Reduces overall programming time when issuing multiple program command sequences

Hardware Features

- Ready/Busy# Output (RY/BY#)
  - Hardware method for detecting program or erase cycle completion
- Hardware Reset Pin (RESET#)
  - Hardware method of resetting the internal state machine to the read mode
- WP#/ACC Input Pin
  - Write protect (WP#) function protects sectors 0, 1, 140, and 141, regardless of sector protect status
  - Acceleration (ACC) function accelerates program timing
- Sector Protection
  - Hardware method to prevent any program or erase operation within a sector
  - Temporary Sector Unprotect allows changing data in protected sectors in-system

Not Recommended for New Design

Contents

1. General Description 3
1.1 Simultaneous Read/Write Operations with Zero Latency 3
1.2 S29JL064H Features 3
2. Product Selector Guide 4
3. Block Diagram 5
4. Connection Diagrams 6
5. Pin Description 7
6. Logic Symbol 7
7. Ordering Information 8
8. Device Bus Operations 9
8.1 Word/Byte Configuration 9
8.2 Requirements for Reading Array Data 10
8.3 Writing Commands/Command Sequences 10
8.4 Simultaneous Read/Write Operations with Zero Latency 10
8.5 Standby Mode 11
8.6 Automatic Sleep Mode 11
8.7 RESET#: Hardware Reset Pin 11
8.8 Output Disable Mode 12
8.9 Autoselect Mode 16
8.10 Sector/Sector Block Protection and Unprotection 17
8.11 Write Protect (WP#) 18
8.12 Temporary Sector Unprotect 19
8.13 Secured Silicon Sector Flash Memory Region 21
8.14 Hardware Data Protection 22
9. Common Flash Memory Interface (CFI) 23
10. Command Definitions 25
10.1 Reading Array Data 26
10.2 Reset Command 26
10.3 Autoselect Command Sequence 26
10.4 Enter Secured Silicon Sector/Exit Secured Silicon Sector Command Sequence 26
10.5 Byte/Word Program Command Sequence 27
10.6 Chip Erase Command Sequence 28
10.7 Sector Erase Command Sequence 29
10.8 Erase Suspend/Erase Resume Commands 30
11. Write Operation Status 31
11.1 DQ7: Data# Polling 32
11.2 RY/BY#: Ready/Busy# 33
11.3 DQ6: Toggle Bit I 34
11.4 DQ2: Toggle Bit II 35
11.5 Reading Toggle Bits DQ6/DQ2 35
11.6 DQ5: Exceeded Timing Limits 35
11.7 DQ3: Sector Erase Timer 35
12. Absolute Maximum Ratings 36
13. Operating Ranges 37
14. DC Characteristics 37
14.1 CMOS Compatible 37
14.2 Zero-Power Flash 38
15. Test Conditions 39
16. Key To Switching Waveforms 40
17. AC Characteristics 41
17.1 Read-Only Operations 41
17.2 Hardware Reset (RESET#) 42
17.3 Word/Byte Configuration (BYTE#) 43
17.4 Erase and Program Operations 44
17.5 Temporary Sector Unprotect 48
17.6 Alternate CE# Controlled Erase and Program Operations 49
18. Erase and Programming Performance 51
19. TSOP & BGA Pin Capacitance 51
20. Physical Dimensions 52
20.1 FBE063—63-Ball Fine-Pitch Ball Grid Array (BGA) 12 x 11 mm package 52
20.2 TS 048—48-Pin Standard TSOP 53
21. Document History Page 54

Not Recommended for New Design

1. General Description

The S29JL064H is a 64 megabit, 3.0 volt-only flash memory device, organized as 4,194,304 words of 16 bits each or 8,388,608 bytes of 8 bits each. Word mode data appears on DQ15–DQ0; byte mode data appears on DQ7–DQ0. The device is designed to be programmed in-system with the standard 3.0 volt V_{CC} supply, and can also be programmed in standard EPROM programmers.

The device is available with an access time of 55, 60, 70, or 90 ns and is offered in 48-pin TSOP and 63-ball Fine Pitch BGA packages. Standard control pins—chip enable (CE#), write enable (WE#), and output enable (OE#)—control normal read and write operations, and avoid bus contention issues.

The device requires only a **single 3.0 volt power supply** for both read and write functions. Internally generated and regulated voltages are provided for the program and erase operations.

1.1 Simultaneous Read/Write Operations with Zero Latency

The Simultaneous Read/Write architecture provides **simultaneous operation** by dividing the memory space into **four banks,** two 8 Mb banks with small and large sectors, and two 24 Mb banks of large sectors. Sector addresses are fixed, system software can be used to form user-defined bank groups.

During an Erase/Program operation, any of the three non-busy banks may be read from. Note that only two banks can operate simultaneously. The device can improve overall system performance by allowing a host system to program or erase in one bank, then immediately and simultaneously read from the other bank, with zero latency. This releases the system from waiting for the completion of program or erase operations.

The S29JL064H can be organized as both a top and bottom boot sector configuration.

Bank	Megabits	Sector Sizes
Bank 1	8 Mb	Eight 8 Kbyte/4 Kword, Fifteen 64 Kbyte/32 Kword
Bank 2	24 Mb	Forty-eight 64 Kbyte/32 Kword
Bank 3	24 Mb	Forty-eight 64 Kbyte/32 Kword
Bank 4	8 Mb	Eight 8 Kbyte/4 Kword, Fifteen 64 Kbyte/32 Kword

Not Recommended for New Design

1.2 S29JL064H Features

The **Secured Silicon Sector Sector** is an extra 256 byte sector capable of being permanently locked by Spansion or customers. The Secured Silicon Customer Indicator Bit (DQ6) is permanently set to 1 if the part has been customer locked, and permanently set to 0 if the part has been factory locked. This way, customer lockable parts can never be used to replace a factory locked part.

Factory locked parts provide several options. The Secured Silicon Sector may store a secure, random 16 byte ESN (Electronic Serial Number), customer code (programmed through Spansion programming services), or both. Customer Lockable parts may utilize the Secured Silicon Sector as bonus space, reading and writing like any other flash sector, or may permanently lock their own code there.

DMS (Data Management Software) allows systems to easily take advantage of the advanced architecture of the simultaneous read/write product line by allowing removal of EEPROM devices. DMS will also allow the system software to be simplified, as it will perform all functions necessary to modify data in file structures, as opposed to single-byte modifications. To write or update a particular piece of data (a phone number or configuration data, for example), the user only needs to state which piece of data is to be updated, and where the updated data is located in the system. This is an advantage compared to systems where user-written software must keep track of the old data location, status, logical to physical translation of the data onto the Flash memory device (or memory devices), and more. Using DMS, user-written software does not need to interface with the Flash memory directly. Instead, the user's software accesses the Flash memory by calling one of only six functions.

The device offers complete compatibility with the **JEDEC 42.4 single-power-supply Flash command set standard**. Commands are written to the command register using standard microprocessor write timings. Reading data out of the device is similar to reading from other Flash or EPROM devices.

The host system can detect whether a program or erase operation is complete by using the device **status bits:** RY/BY# pin, DQ7 (Data# Polling) and DQ6/DQ2 (toggle bits). After a program or erase cycle has been completed, the device automatically returns to the read mode.

The **sector erase architecture** allows memory sectors to be erased and reprogrammed without affecting the data contents of other sectors. The device is fully erased when shipped from the factory.

Hardware data protection measures include a low V_{CC} detector that automatically inhibits write operations during power transitions. The **hardware sector protection** feature disables both program and erase operations in any combination of the sectors of memory. This can be achieved in-system or via programming equipment.

The device offers two power-saving features. When addresses have been stable for a specified amount of time, the device enters the **automatic sleep mode**. The system can also place the device into the **standby mode**. Power consumption is greatly reduced in both modes.

2. Product Selector Guide

Part Number		S29JL064H			
Speed Option	Standard Voltage Range: V_{CC} = 2.7–3.6 V	55	60	70	90
Max Access Time (ns), t_{ACC}		55	60	70	90
CE# Access (ns), t_{CE}		55	60	70	90
OE# Access (ns), t_{OE}		25	25	30	35

Not Recommended for New Design

3. Block Diagram

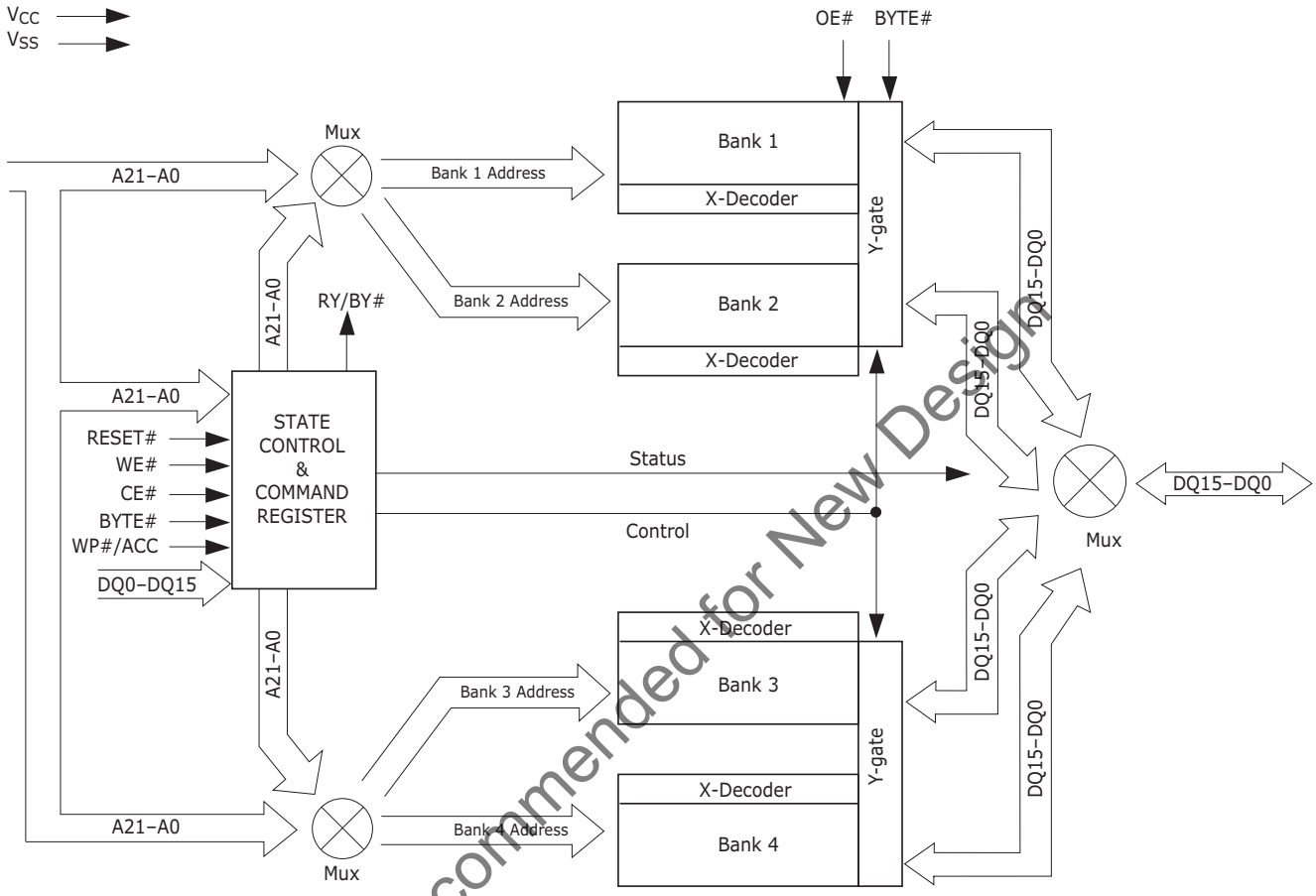

Not Recommended for New Design

4. Connection Diagrams

Figure 4.1 48-Pin Standard TSOP

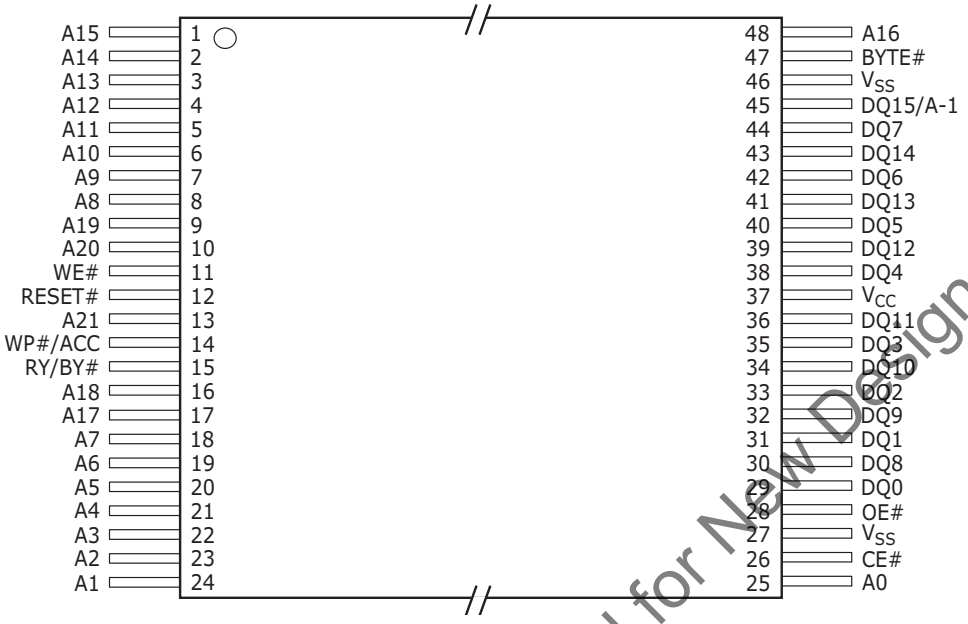

Not Recommended for New Design

Figure 4.2 63-Ball Fine-Pitch BGA (FBGA) - Top View, Balls Facing Down

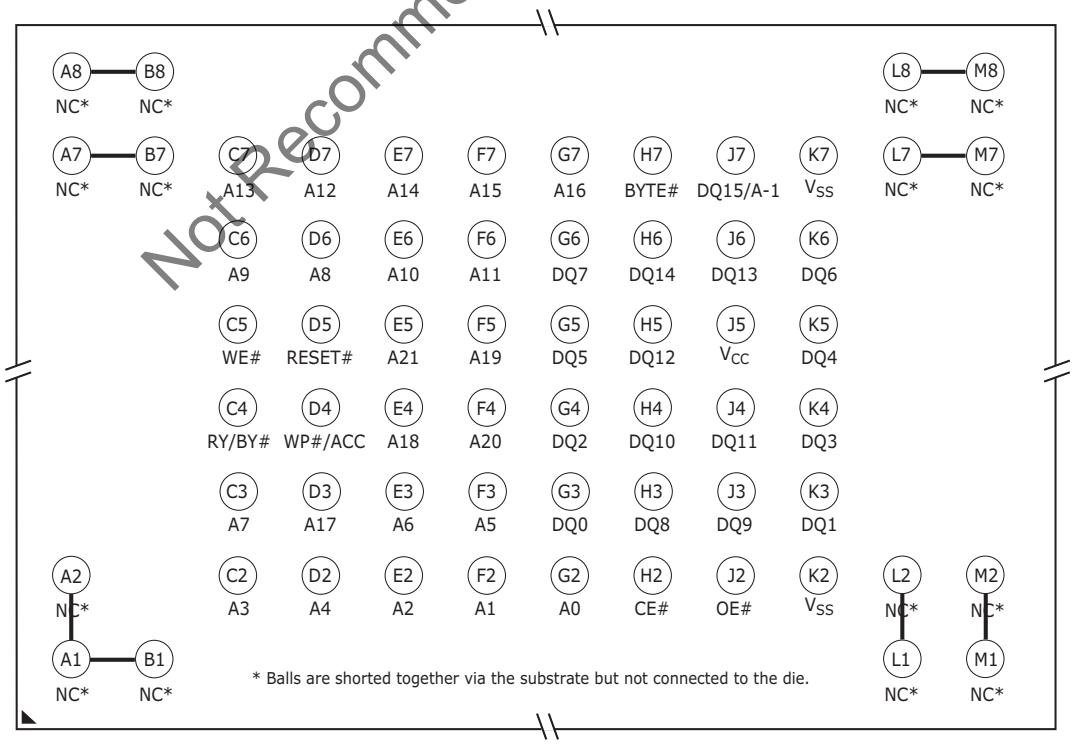

5. Pin Description

A21–A0	22 Addresses
DQ14–DQ0	15 Data Inputs/Outputs (x16-only devices)
DQ15/A-1	DQ15 (Data Input/Output, word mode), A-1 (LSB Address Input, byte mode)
CE#	Chip Enable
OE#	Output Enable
WE#	Write Enable
WP#/ACC	Hardware Write Protect/Acceleration Pin
RESET#	Hardware Reset Pin, Active Low
BYTE#	Selects 8-bit or 16-bit mode
RY/BY#	Ready/Busy Output
V_{CC}	3.0 volt-only single power supply (see *Product Selector Guide* on page 4 for speed options and voltage supply tolerances)
V_{SS}	Device Ground
NC	Pin Not Connected Internally

6. Logic Symbol

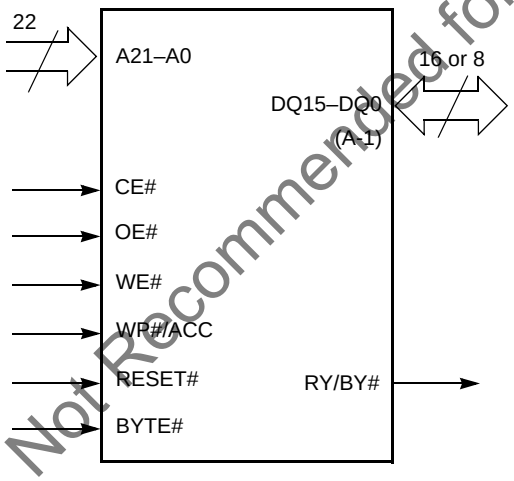

Not Recommended for New Design

7. Ordering Information

The order number is formed by a valid combinations of the following:

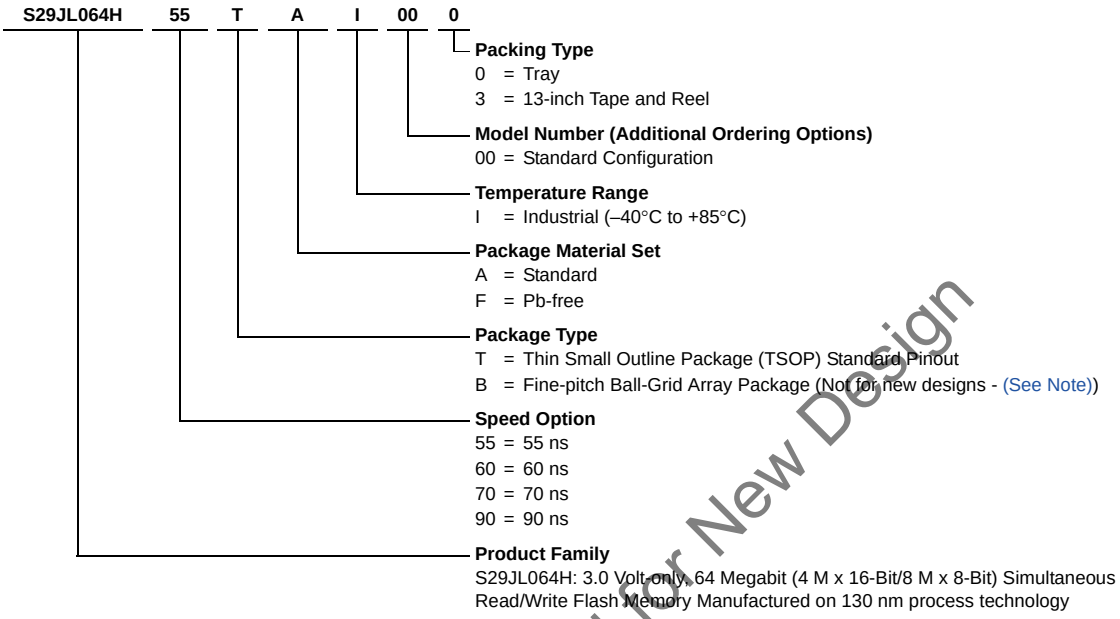

Note

For new designs involving Fine-pitch Ball Grid Array (FBGA) packages, S29PL064J supersedes S29JL064H and is the factory recommended migration path. Please refer to the S29PL-J Data Sheet for specifications and ordering information.

Not Recommended for New Design

S29JL064H Valid Combinations						
Device Family	**Speed Option**	**Package, Material, Set and Temperature Range**	**Model Number**	**Packing Type**	**Package Description**	
S29JL064H	55, 60, 70, 90	TAI TFI	00	0, 3 (Note 2)	TS048 (Note 3)	TSOP
		BAI, BEI			FBE063 (Note 4)	Fine-pitch BGA

Notes

1. *Listed TSOP part numbers describe products based on Copper (Cu) leadframes. Contact your local sales office for products based on Alloy-42 leadframes.*
2. *Type 0 is standard. Specify other options as required.*
3. *TSOP package marking omits packing type designator from ordering part number.*
4. *BGA package marking omits leading S29 and packing type designator from ordering part number.*

8. Device Bus Operations

This section describes the requirements and use of the device bus operations, which are initiated through the internal command register. The command register itself does not occupy any addressable memory location. The register is a latch used to store the commands, along with the address and data information needed to execute the command. The contents of the register serve as inputs to the internal state machine. The state machine outputs dictate the function of the device. Table lists the device bus operations, the inputs and control levels they require, and the resulting output. The following subsections describe each of these operations in further detail.

S29JL064H Device Bus Operations

Operation	CE#	OE#	WE#	RESET#	WP#/ ACC	Addresses (Note 2)	DQ15–DQ8		DQ7–DQ0
							BYTE# = V_{IH}	BYTE# = V_{IL}	
Read	L	L	H	H	L/H	A_{IN}	D_{OUT}	DQ14–DQ8 = High-Z, DQ15 = A-1	D_{OUT}
Write	L	H	L	H	(Note 3)	A_{IN}	D_{IN}		D_{IN}
Standby	V_{CC} ± 0.3 V	X	X	V_{CC} ± 0.3 V	L/H	X	High-Z	High-Z	High-Z
Output Disable	L	H	H	H	L/H	X	High-Z	High-Z	High-Z
Reset	X	X	X	L	L/H	X	High-Z	High-Z	High-Z
Sector Protect (Note 2)	L	H	L	V_{ID}	L/H	SA, A6 = L, A1 = H, A0 = L	X	X	D_{IN}
Sector Unprotect (Note 2)	L	H	L	V_{ID}	(Note 3)	SA, A6 = H, A1 = H, A0 = L	X	X	D_{IN}
Temporary Sector Unprotect	X	X	X	V_{ID}	(Note 3)	A_{IN}	D_{IN}	High-Z	D_{IN}

Legend

L = Logic Low = V_{IL}
H = Logic High = V_{IH}
V_{ID} = 11.5–12.5 V
V_{HH} = 9.0 ± 0.5 V
X = Don't Care
SA = Sector Address
A_{IN} = Address In
D_{IN} = Data In
D_{OUT} = Data Out

Notes:

1. *Addresses are A21:A0 in word mode (BYTE# = V_{IH}), A21:A-1 in byte mode (BYTE# = V_{IL}).*
2. *The sector protect and sector unprotect functions may also be implemented via programming equipment. See Sector/Sector Block Protection and Unprotection on page 17.*
3. *If WP#/ACC = V_{IL}, sectors 0, 1, 140, and 141 remain protected. If WP#/ACC = V_{IH}, protection on sectors 0, 1, 140, and 141 depends on whether they were last protected or unprotected using the method described in Sector/Sector Block Protection and Unprotection on page 17. If WP#/ACC = V_{HH}, all sectors will be unprotected.*

Not Recommended for New Design

8.1 Word/Byte Configuration

The BYTE# pin controls whether the device data I/O pins operate in the byte or word configuration. If the BYTE# pin is set at logic '1', the device is in word configuration, DQ15–DQ0 are active and controlled by CE# and OE#.

If the BYTE# pin is set at logic '0', the device is in byte configuration, and only data I/O pins DQ7–DQ0 are active and controlled by CE# and OE#. The data I/O pins DQ14–DQ8 are tri-stated, and the DQ15 pin is used as an input for the LSB (A-1) address function.

8.2 Requirements for Reading Array Data

To read array data from the outputs, the system must drive the CE# and OE# pins to V_{IL}. CE# is the power control and selects the device. OE# is the output control and gates array data to the output pins. WE# should remain at V_{IH}. The BYTE# pin determines whether the device outputs array data in words or bytes.

The internal state machine is set for reading array data upon device power-up, or after a hardware reset. This ensures that no spurious alteration of the memory content occurs during the power transition. No command is necessary in this mode to obtain array data. Standard microprocessor read cycles that assert valid addresses on the device address inputs produce valid data on the device data outputs. Each bank remains enabled for read access until the command register contents are altered.

Refer to *Read-Only Operations* on page 41 for timing specifications and to Figure 17.1 on page 41 for the timing diagram. I_{CC1} in *DC Characteristics* on page 37 represents the active current specification for reading array data.

8.3 Writing Commands/Command Sequences

To write a command or command sequence (which includes programming data to the device and erasing sectors of memory), the system must drive WE# and CE# to V_{IL}, and OE# to V_{IH}.

For program operations, the BYTE# pin determines whether the device accepts program data in bytes or words. Refer to *Word/Byte Configuration* on page 9 for more information.

The device features an **Unlock Bypass** mode to facilitate faster programming. Once a bank enters the Unlock Bypass mode, only two write cycles are required to program a word or byte, instead of four. *Byte/Word Program Command Sequence* on page 27 has details on programming data to the device using both standard and Unlock Bypass command sequences.

An erase operation can erase one sector, multiple sectors, or the entire device. Table on page 15 indicates the address space that each sector occupies. Similarly, a *sector address* is the address bits required to uniquely select a sector. *Command Definitions* on page 25 has details on erasing a sector or the entire chip, or suspending/resuming the erase operation.

The device address space is divided into four banks. A *bank address* is the address bits required to uniquely select a bank.

I_{CC2} in the *DC Characteristics* on page 37 represents the active current specification for the write mode. *AC Characteristics* on page 41 contains timing specification tables and timing diagrams for write operations.

Not Recommended for New Design

8.3.1 Accelerated Program Operation

The device offers accelerated program operations through the ACC function. This is one of two functions provided by the WP#/ACC pin. This function is primarily intended to allow faster manufacturing throughput at the factory.

If the system asserts V_{HH} on this pin, the device automatically enters the aforementioned Unlock Bypass mode, temporarily unprotects any protected sectors, and uses the higher voltage on the pin to reduce the time required for program operations. The system would use a two-cycle program command sequence as required by the Unlock Bypass mode. Removing V_{HH} from the WP#/ACC pin returns the device to normal operation. *Note that V_{HH} must not be asserted on WP#/ACC for operations other than accelerated programming, or device damage may result. In addition, the WP#/ACC pin must not be left floating or unconnected; inconsistent behavior of the device may result*. *Write Protect (WP#)* on page 18 for related information.

8.3.2 Autoselect Functions

If the system writes the autoselect command sequence, the device enters the autoselect mode. The system can then read autoselect codes from the internal register (which is separate from the memory array) on DQ15–DQ0. Standard read cycle timings apply in this mode. Refer to *Autoselect Mode* on page 16 and *Autoselect Command Sequence* on page 26 for more information.

8.4 Simultaneous Read/Write Operations with Zero Latency

This device is capable of reading data from one bank of memory while programming or erasing in the other bank of memory. An erase operation may also be suspended to read from or program to another location within the same bank (except the sector being erased). Figure 17.8 on page 46 shows how read and write cycles may be initiated for simultaneous operation with zero latency. I_{CC6} and I_{CC7} in the *DC Characteristics* on page 37 represent the current specifications for read-while-program and read-while-erase, respectively.

8.5 Standby Mode

When the system is not reading or writing to the device, it can place the device in the standby mode. In this mode, current consumption is greatly reduced, and the outputs are placed in the high impedance state, independent of the OE# input.

The device enters the CMOS standby mode when the CE# and RESET# pins are both held at V_{CC} ± 0.3 V. (Note that this is a more restricted voltage range than V_{IH}.) If CE# and RESET# are held at V_{IH}, but not within V_{CC} ± 0.3 V, the device will be in the standby mode, but the standby current will be greater. The device requires standard access time (t_{CE}) for read access when the device is in either of these standby modes, before it is ready to read data.

If the device is deselected during erasure or programming, the device draws active current until the operation is completed.

I_{CC3} in *DC Characteristics* on page 37 represents the standby current specification.

8.6 Automatic Sleep Mode

The automatic sleep mode minimizes Flash device energy consumption. The device automatically enables this mode when addresses remain stable for t_{ACC} + 30 ns. The automatic sleep mode is independent of the CE#, WE#, and OE# control signals. Standard address access timings provide new data when addresses are changed. While in sleep mode, output data is latched and always available to the system. I_{CC5} in *DC Characteristics* on page 37 represents the automatic sleep mode current specification.

8.7 RESET#: Hardware Reset Pin

The RESET# pin provides a hardware method of resetting the device to reading array data. When the RESET# pin is driven low for at least a period of t_{RP}, the device immediately terminates any operation in progress, tristates all output pins, and ignores all read/write commands for the duration of the RESET# pulse. The device also resets the internal state machine to reading array data. The operation that was interrupted should be reinitiated once the device is ready to accept another command sequence, to ensure data integrity.

Current is reduced for the duration of the RESET# pulse. When RESET# is held at V_{SS}±0.3 V, the device draws CMOS standby current (I_{CC4}). If RESET# is held at V_{IL} but not within V_{SS}±0.3 V, the standby current will be greater.

The RESET# pin may be tied to the system reset circuitry. A system reset would thus also reset the Flash memory, enabling the system to read the boot-up firmware from the Flash memory.

If RESET# is asserted during a program or erase operation, the RY/BY# pin remains a “0” (busy) until the internal reset operation is complete, which requires a time of t_{READY} (during Embedded Algorithms). The system can thus monitor RY/BY# to determine whether the reset operation is complete. If RESET# is asserted when a program or erase operation is not executing (RY/BY# pin is “1”), the reset operation is completed within a time of t_{READY} (not during Embedded Algorithms). The system can read data t_{RH} after the RESET# pin returns to V_{IH}.

Refer to *AC Characteristics* on page 41 for RESET# parameters and to Figure 17.2 on page 42 for the timing diagram.

Not Recommended for New Design

8.8 Output Disable Mode

When the OE# input is at V_{IH}, output from the device is disabled. The output pins are placed in the high impedance state.

S29JL064H Sector Architecture (Sheet 1 of 4)

Bank	Sector	Sector Address A21–A12	Sector Size (Kbytes/Kwords)	(x8) Address Range	(x16) Address Range
Bank 1	SA0	0000000000	8/4	000000h–001FFFh	00000h–00FFFh
	SA1	0000000001	8/4	002000h–003FFFh	01000h–01FFFh
	SA2	0000000010	8/4	004000h–005FFFh	02000h–02FFFh
	SA3	0000000011	8/4	006000h–007FFFh	03000h–03FFFh
	SA4	0000000100	8/4	008000h–009FFFh	04000h–04FFFh
	SA5	0000000101	8/4	00A000h–00BFFFh	05000h–05FFFh
	SA6	0000000110	8/4	00C000h–00DFFFh	06000h–06FFFh
	SA7	0000000111	8/4	00E000h–00FFFFh	07000h–07FFFh
	SA8	0000001xxx	64/32	010000h–01FFFFh	08000h–0FFFFh
	SA9	0000010xxx	64/32	020000h–02FFFFh	10000h–17FFFh
	SA10	0000011xxx	64/32	030000h–03FFFFh	18000h–1FFFFh
	SA11	0000100xxx	64/32	040000h–04FFFFh	20000h–27FFFh
	SA12	0000101xxx	64/32	050000h–05FFFFh	28000h–2FFFFh
	SA13	0000110xxx	64/32	060000h–06FFFFh	30000h–37FFFh
	SA14	0000111xxx	64/32	070000h–07FFFFh	38000h–3FFFFh
	SA15	0001000xxx	64/32	080000h–08FFFFh	40000h–47FFFh
	SA16	0001001xxx	64/32	090000h–09FFFFh	48000h–4FFFFh
	SA17	0001010xxx	64/32	0A0000h–0AFFFFh	50000h–57FFFh
	SA18	0001011xxx	64/32	0B0000h–0BFFFFh	58000h–5FFFFh
	SA19	0001100xxx	64/32	0C0000h–0CFFFFh	60000h–67FFFh
	SA20	0001101xxx	64/32	0D0000h–0DFFFFh	68000h–6FFFFh
	SA21	0001110xxx	64/32	0E0000h–0EFFFFh	70000h–77FFFh
	SA22	0001111xxx	64/32	0F0000h–0FFFFFh	78000h–7FFFFh

Not Recommended for New Design

S29JL064H Sector Architecture (Sheet 2 of 4)

Bank	Sector	Sector Address A21–A12	Sector Size (Kbytes/Kwords)	(x8) Address Range	(x16) Address Range
Bank 2	SA23	0010000xxx	64/32	100000h–10FFFFh	80000h–87FFFh
	SA24	0010001xxx	64/32	110000h–11FFFFh	88000h–8FFFFh
	SA25	0010010xxx	64/32	120000h–12FFFFh	90000h–97FFFh
	SA26	0010011xxx	64/32	130000h–13FFFFh	98000h–9FFFFh
	SA27	0010100xxx	64/32	140000h–14FFFFh	A0000h–A7FFFh
	SA28	0010101xxx	64/32	150000h–15FFFFh	A8000h–AFFFFh
	SA29	0010110xxx	64/32	160000h–16FFFFh	B0000h–B7FFFh
	SA30	0010111xxx	64/32	170000h–17FFFFh	B8000h–BFFFFh
	SA31	0011000xxx	64/32	180000h–18FFFFh	C0000h–C7FFFh
	SA32	0011001xxx	64/32	190000h–19FFFFh	C8000h–CFFFFh
	SA33	0011010xxx	64/32	1A0000h–1AFFFFh	D0000h–D7FFFh
	SA34	0011011xxx	64/32	1B0000h–1BFFFFh	D8000h–DFFFFh
	SA35	0011000xxx	64/32	1C0000h–1CFFFFh	E0000h–E7FFFh
	SA36	0011101xxx	64/32	1D0000h–1DFFFFh	E8000h–EFFFFh
	SA37	0011110xxx	64/32	1E0000h–1EFFFFh	F0000h–F7FFFh
	SA38	0011111xxx	64/32	1F0000h–1FFFFFh	F8000h–FFFFFh
	SA39	0100000xxx	64/32	200000h–20FFFFh	100000h–107FFFh
	SA40	0100001xxx	64/32	210000h–21FFFFh	108000h–10FFFFh
	SA41	0100010xxx	64/32	220000h–22FFFFh	110000h–117FFFh
	SA42	0101011xxx	64/32	230000h–23FFFFh	118000h–11FFFFh
	SA43	0100100xxx	64/32	240000h–24FFFFh	120000h–127FFFh
	SA44	0100101xxx	64/32	250000h–25FFFFh	128000h–12FFFFh
	SA45	0100110xxx	64/32	260000h–26FFFFh	130000h–137FFFh
	SA46	0100111xxx	64/32	270000h–27FFFFh	138000h–13FFFFh
	SA47	0101000xxx	64/32	280000h–28FFFFh	140000h–147FFFh
	SA48	0101001xxx	64/32	290000h–29FFFFh	148000h–14FFFFh
	SA49	0101010xxx	64/32	2A0000h–2AFFFFh	150000h–157FFFh
	SA50	0101011xxx	64/32	2B0000h–2BFFFFh	158000h–15FFFFh
	SA51	0101100xxx	64/32	2C0000h–2CFFFFh	160000h–167FFFh
	SA52	0101101xxx	64/32	2D0000h–2DFFFFh	168000h–16FFFFh
	SA53	0101110xxx	64/32	2E0000h–2EFFFFh	170000h–177FFFh
	SA54	0101111xxx	64/32	2F0000h–2FFFFFh	178000h–17FFFFh
	SA55	0110000xxx	64/32	300000h–30FFFFh	180000h–187FFFh
	SA56	0110001xxx	64/32	310000h–31FFFFh	188000h–18FFFFh
	SA57	0110010xxx	64/32	320000h–32FFFFh	190000h–197FFFh
	SA58	0110011xxx	64/32	330000h–33FFFFh	198000h–19FFFFh
	SA59	0110100xxx	64/32	340000h–34FFFFh	1A0000h–1A7FFFh
	SA60	0110101xxx	64/32	350000h–35FFFFh	1A8000h–1AFFFFh
	SA61	0110110xxx	64/32	360000h–36FFFFh	1B0000h–1B7FFFh
	SA62	0110111xxx	64/32	370000h–37FFFFh	1B8000h–1BFFFFh
	SA63	0111000xxx	64/32	380000h–38FFFFh	1C0000h–1C7FFFh
	SA64	0111001xxx	64/32	390000h–39FFFFh	1C8000h–1CFFFFh
	SA65	0111010xxx	64/32	3A0000h–3AFFFFh	1D0000h–1D7FFFh
	SA66	0111011xxx	64/32	3B0000h–3BFFFFh	1D8000h–1DFFFFh
	SA67	0111100xxx	64/32	3C0000h–3CFFFFh	1E0000h–1E7FFFh
	SA68	0111101xxx	64/32	3D0000h–3DFFFFh	1E8000h–1EFFFFh

Not Recommended for New Design

S29JL064H Sector Architecture (Sheet 3 of 4)

Bank	Sector	Sector Address A21–A12	Sector Size (Kbytes/Kwords)	(x8) Address Range	(x16) Address Range
Bank 3	SA71	1000000xxx	64/32	400000h–40FFFFh	200000h–207FFFh
	SA72	1000001xxx	64/32	410000h–41FFFFh	208000h–20FFFFh
	SA73	1000010xxx	64/32	420000h–42FFFFh	210000h–217FFFh
	SA74	1000011xxx	64/32	430000h–43FFFFh	218000h–21FFFFh
	SA75	1000100xxx	64/32	440000h–44FFFFh	220000h–227FFFh
	SA76	1000101xxx	64/32	450000h–45FFFFh	228000h–22FFFFh
	SA77	1000110xxx	64/32	460000h–46FFFFh	230000h–237FFFh
	SA78	1000111xxx	64/32	470000h–47FFFFh	238000h–23FFFFh
	SA79	1001000xxx	64/32	480000h–48FFFFh	240000h–247FFFh
	SA80	1001001xxx	64/32	490000h–49FFFFh	248000h–24FFFFh
	SA81	1001010xxx	64/32	4A0000h–4AFFFFh	250000h–257FFFh
	SA82	1001011xxx	64/32	4B0000h–4BFFFFh	258000h–25FFFFh
	SA83	1001100xxx	64/32	4C0000h–4CFFFFh	260000h–267FFFh
	SA84	1001101xxx	64/32	4D0000h–4DFFFFh	268000h–26FFFFh
	SA85	1001110xxx	64/32	4E0000h–4EFFFFh	270000h–277FFFh
	SA86	1001111xxx	64/32	4F0000h–4FFFFFh	278000h–27FFFFh
	SA87	1010000xxx	64/32	500000h–50FFFFh	280000h–28FFFFh
	SA88	1010001xxx	64/32	510000h–51FFFFh	288000h–28FFFFh
	SA89	1010010xxx	64/32	520000h–52FFFFh	290000h–297FFFh
	SA90	1010011xxx	64/32	530000h–53FFFFh	298000h–29FFFFh
	SA91	1010100xxx	64/32	540000h–54FFFFh	2A0000h–2A7FFFh
	SA92	1010101xxx	64/32	550000h–55FFFFh	2A8000h–2AFFFFh
	SA93	1010110xxx	64/32	560000h–56FFFFh	2B0000h–2B7FFFh
	SA94	1010111xxx	64/32	570000h–57FFFFh	2B8000h–2BFFFFh
	SA95	1011000xxx	64/32	580000h–58FFFFh	2C0000h–2C7FFFh
	SA96	1011001xxx	64/32	590000h–59FFFFh	2C8000h–2CFFFFh
	SA97	1011010xxx	64/32	5A0000h–5AFFFFh	2D0000h–2D7FFFh
	SA98	1011011xxx	64/32	5B0000h–5BFFFFh	2D8000h–2DFFFFh
	SA99	1011100xxx	64/32	5C0000h–5CFFFFh	2E0000h–2E7FFFh
	SA100	1011101xxx	64/32	5D0000h–5DFFFFh	2E8000h–2EFFFFh
	SA101	1011110xxx	64/32	5E0000h–5EFFFFh	2F0000h–2FFFFFh
	SA102	1011111xxx	64/32	5F0000h–5FFFFFh	2F8000h–2FFFFFh
	SA103	1100000xxx	64/32	600000h–60FFFFh	300000h–307FFFh
	SA104	1100001xxx	64/32	610000h–61FFFFh	308000h–30FFFFh
	SA105	1100010xxx	64/32	620000h–62FFFFh	310000h–317FFFh
	SA106	1100011xxx	64/32	630000h–63FFFFh	318000h–31FFFFh
	SA107	1100100xxx	64/32	640000h–64FFFFh	320000h–327FFFh
	SA108	1100101xxx	64/32	650000h–65FFFFh	328000h–32FFFFh
	SA109	1100110xxx	64/32	660000h–66FFFFh	330000h–337FFFh
	SA110	1100111xxx	64/32	670000h–67FFFFh	338000h–33FFFFh
	SA111	1101000xxx	64/32	680000h–68FFFFh	340000h–347FFFh
	SA112	1101001xxx	64/32	690000h–69FFFFh	348000h–34FFFFh
	SA113	1101010xxx	64/32	6A0000h–6AFFFFh	350000h–357FFFh
	SA114	1101011xxx	64/32	6B0000h–6BFFFFh	358000h–35FFFFh
	SA115	1101100xxx	64/32	6C0000h–6CFFFFh	360000h–367FFFh
	SA116	1101101xxx	64/32	6D0000h–6DFFFFh	368000h–36FFFFh

Not Recommended for New Design

S29JL064H Sector Architecture (Sheet 4 of 4)

Bank	Sector	Sector Address A21–A12	Sector Size (Kbytes/Kwords)	(x8) Address Range	(x16) Address Range
Bank 4	SA119	1110000xxx	64/32	700000h–70FFFFh	380000h–387FFFh
	SA120	1110001xxx	64/32	710000h–71FFFFh	388000h–38FFFFh
	SA121	1110010xxx	64/32	720000h–72FFFFh	390000h–397FFFh
	SA122	1110011xxx	64/32	730000h–73FFFFh	398000h–39FFFFh
	SA123	1110100xxx	64/32	740000h–74FFFFh	3A0000h–3A7FFFh
	SA124	1110101xxx	64/32	750000h–75FFFFh	3A8000h–3AFFFFh
	SA125	1110110xxx	64/32	760000h–76FFFFh	3B0000h–3B7FFFh
	SA126	1110111xxx	64/32	770000h–77FFFFh	3B8000h–3BFFFFh
	SA127	1111000xxx	64/32	780000h–78FFFFh	3C0000h–3C7FFFh
	SA128	1111001xxx	64/32	790000h–79FFFFh	3C8000h–3CFFFFh
	SA129	1111010xxx	64/32	7A0000h–7AFFFFh	3D0000h–3D7FFFh
	SA130	1111011xxx	64/32	7B0000h–7BFFFFh	3D8000h–3DFFFFh
	SA131	1111100xxx	64/32	7C0000h–7CFFFFh	3E0000h–3E7FFFh
	SA132	1111101xxx	64/32	7D0000h–7DFFFFh	3E8000h–3EFFFFh
	SA133	1111110xxx	64/32	7E0000h–7EFFFFh	3F0000h–3F7FFFh
	SA134	1111111000	8/4	7F0000h–7F1FFFh	3F8000h–3F8FFFh
	SA135	1111111001	8/4	7F2000h–7F3FFFh	3F9000h–3F9FFFh
	SA136	1111111010	8/4	7F4000h–7F5FFFh	3FA000h–3FAFFFh
	SA137	1111111011	8/4	7F6000h–7F7FFFh	3FB000h–3FBFFFh
	SA138	1111111100	8/4	7F8000h–7F9FFFh	3FC000h–3FCFFFh
	SA139	1111111101	8/4	7FA000h–7FBFFFh	3FD000h–3FDFFFh
	SA140	1111111110	8/4	7FC000h–7FDFFFh	3FE000h–3FEFFFh
	SA141	1111111111	8/4	7FE000h–7FFFFFh	3FF000h–3FFFFFh

Note
The address range is A21:A-1 in byte mode (BYTE# = V_{IL}) or A21:A0 in word mode (BYTE# = V_{IH}).

Not Recommended for New Design

Bank Address

Bank	A21–A19
1	000
2	001, 010, 011
3	100, 101, 110
4	111

Secured Silicon Sector Addresses

Device	Sector Size	(x8) Address Range	(x16) Address Range
S29JL064H	256 bytes	000000h–0000FFh	000000h–00007Fh

8.9 Autoselect Mode

The autoselect mode provides manufacturer and device identification, and sector protection verification, through identifier codes output on DQ7–DQ0. This mode is primarily intended for programming equipment to automatically match a device to be programmed with its corresponding programming algorithm. However, the autoselect codes can also be accessed in-system through the command register.

When using programming equipment, the autoselect mode requires V_{ID} on address pin A9. Address pins must be as shown in Table . In addition, when verifying sector protection, the sector address must appear on the appropriate highest order address bits (see Table on page 15). Table shows the remaining address bits that are don't care. When all necessary bits have been set as required, the programming equipment may then read the corresponding identifier code on DQ7–DQ0. However, the autoselect codes can also be accessed in-system through the command register, for instances when the S29JL064 is erased or programmed in a system without access to high voltage on the A9 pin. The command sequence is illustrated in Table on page 30. *Note that if a Bank Address (BA) on address bits A21, A20, and A19 is asserted during the third write cycle of the autoselect command, the host system can read autoselect data from that bank and then immediately read array data from another bank, without exiting the autoselect mode.*

To access the autoselect codes in-system, the host system can issue the autoselect command via the command register, as shown in Table on page 30. This method does not require V_{ID}. Refer to *Autoselect Command Sequence* on page 26 for more information.

S29JL064H Autoselect Codes, (High Voltage Method)

Description		CE#	OE#	WE#	A21 to A12	A11 to A10	A9	A8 to A7	A6	A5 to A4	A3	A2	A1	A0	DQ15 to DQ8		DQ7 to DQ0
															BYTE# = V_{IH}	BYTE# = V_{IL}	
Manufacturer ID: Spansion Products		L	L	H	BA	X	V_{ID}	X	L	X	L	L	L	L	X	X	01h
Device ID	Read Cycle 1	L	L	H	BA	X	V_{ID}	X	L	X	L	L	L	H	22h	X	7Eh
	Read Cycle 2								L		H	H	H	L	22h		02h
	Read Cycle 3								L		H	H	H	H	22h		01h
Sector Protection Verification		L	L	H	SA	X	V_{ID}	X	L	X	L	L	H	L	X	X	01h (protected), 00h (unprotected)
Secured Silicon Indicator Bit (DQ6, DQ7)		L	L	H	BA	X	V_{ID}	X	L	X	L	L	H	H	X	X	81h (factory locked), 01h (not factory/ customer locked)

Legend

L = Logic Low = V_{IL}
H = Logic High = V_{IH}
BA = Bank Address
SA = Sector Address
X = Don't care.

Not Recommended for New Design

8.10 Sector/Sector Block Protection and Unprotection

(Note: For the following discussion, the term *sector* applies to both sectors and sector blocks. A sector block consists of two or more adjacent sectors that are protected or unprotected at the same time (see Table).

The hardware sector protection feature disables both program and erase operations in any sector. The hardware sector unprotection feature re-enables both program and erase operations in previously protected sectors. Sector protection/unprotection can be implemented via two methods.

S29JL064H Boot Sector/Sector Block Addresses for Protection/Unprotection (Sheet 1 of 2)

Sector	A21–A12	Sector/Sector Block Size
SA0	0000000000	8 Kbytes
SA1	0000000001	8 Kbytes
SA2	0000000010	8 Kbytes
SA3	0000000011	8 Kbytes
SA4	0000000100	8 Kbytes
SA5	0000000101	8 Kbytes
SA6	0000000110	8 Kbytes
SA7	0000000111	8 Kbytes
SA8–SA10	0000001XXX, 0000010XXX, 0000011XXX,	192 (3x64) Kbytes
SA11–SA14	00001XXXXX	256 (4x64) Kbytes
SA15–SA18	00010XXXXX	256 (4x64) Kbytes
SA19–SA22	00011XXXXX	256 (4x64) Kbytes
SA23–SA26	00100XXXXX	256 (4x64) Kbytes
SA27-SA30	00101XXXXX	256 (4x64) Kbytes
SA31-SA34	00110XXXXX	256 (4x64) Kbytes
SA35-SA38	00111XXXXX	256 (4x64) Kbytes
SA39-SA42	01000XXXXX	256 (4x64) Kbytes
SA43-SA46	01001XXXXX	256 (4x64) Kbytes
SA47-SA50	01010XXXXX	256 (4x64) Kbytes
SA51-SA54	01011XXXXX	256 (4x64) Kbytes
SA55–SA58	01100XXXXX	256 (4x64) Kbytes
SA59–SA62	01101XXXXX	256 (4x64) Kbytes
SA63–SA66	01110XXXXX	256 (4x64) Kbytes
SA67–SA70	01111XXXXX	256 (4x64) Kbytes
SA71–SA74	10000XXXXX	256 (4x64) Kbytes
SA75–SA78	10001XXXXX	256 (4x64) Kbytes
SA79–SA82	10010XXXXX	256 (4x64) Kbytes
SA83–SA86	10011XXXXX	256 (4x64) Kbytes
SA87–SA90	10100XXXXX	256 (4x64) Kbytes
SA91–SA94	10101XXXXX	256 (4x64) Kbytes
SA95–SA98	10110XXXXX	256 (4x64) Kbytes
SA99–SA102	10111XXXXX	256 (4x64) Kbytes
SA103–SA106	11000XXXXX	256 (4x64) Kbytes
SA107–SA110	11001XXXXX	256 (4x64) Kbytes
SA111–SA114	11010XXXXX	256 (4x64) Kbytes
SA115–SA118	11011XXXXX	256 (4x64) Kbytes
SA119–SA122	11100XXXXX	256 (4x64) Kbytes
SA123–SA126	11101XXXXX	256 (4x64) Kbytes

Not Recommended for New Design

S29JL064H Boot Sector/Sector Block Addresses for Protection/Unprotection (Sheet 2 of 2)

Sector	A21–A12	Sector/Sector Block Size
SA127–SA130	11110XXXXX	256 (4x64) Kbytes
SA131–SA133	1111100XXX, 1111101XXX, 1111110XXX	192 (3x64) Kbytes
SA134	1111111000	8 Kbytes
SA135	1111111001	8 Kbytes
SA136	1111111010	8 Kbytes
SA137	1111111011	8 Kbytes
SA138	1111111100	8 Kbytes
SA139	1111111101	8 Kbytes
SA140	1111111110	8 Kbytes
SA141	1111111111	8 Kbytes

Sector protect/Sector Unprotect requires V_{ID} on the RESET# pin only, and can be implemented either in-system or via programming equipment. Figure 8.2 on page 20 shows the algorithms and Figure 17.13 on page 49 shows the timing diagram. For sector unprotect, all unprotected sectors must first be protected prior to the first sector unprotect write cycle. *Note that the sector unprotect algorithm unprotects all sectors in parallel. All previously protected sectors must be individually re-protected.* To change data in protected sectors efficiently, the temporary sector unprotect function is available. See *Temporary Sector Unprotect* on page 48.

The device is shipped with all sectors unprotected. Optional Spansion programming service enable programming and protecting sectors at the factory prior to shipping the device. Contact your local sales office for details.

It is possible to determine whether a sector is protected or unprotected. See *Autoselect Mode* on page 16 for details.

Not Recommended for New Design

8.11 Write Protect (WP#)

The Write Protect function provides a hardware method of protecting without using V_{ID}. This function is one of two provided by the WP#/ACC pin.

If the system asserts V_{IL} on the WP#/ACC pin, the device disables program and erase functions in sectors 0, 1, 140, and 141, independently of whether those sectors were protected or unprotected using the method described in *Sector/Sector Block Protection and Unprotection* on page 17.

If the system asserts V_{IH} on the WP#/ACC pin, the device reverts to whether sectors 0, 1, 140, and 141 were last set to be protected or unprotected. That is, sector protection or unprotection for these sectors depends on whether they were last protected or unprotected using the method described in *Sector/Sector Block Protection and Unprotection* on page 17.

Note that the WP#/ACC pin must not be left floating or unconnected; inconsistent behavior of the device may result.

WP#/ACC Modes

WP# Input Voltage	Device Mode
V_{IL}	Disables programming and erasing in SA0, SA1, SA140, and SA141
V_{IH}	Enables programming and erasing in SA0, SA1, SA140, and SA141, dependent on whether they were last protected or unprotected.
V_{HH}	Enables accelerated programming (ACC). See *Accelerated Program Operation* on page 10.

8.12 Temporary Sector Unprotect

(Note: For the following discussion, the term *sector* applies to both sectors and sector blocks. A sector block consists of two or more adjacent sectors that are protected or unprotected at the same time (see Table on page 17).

This feature allows temporary unprotection of previously protected sectors to change data in-system. The Temporary Sector Unprotect mode is activated by setting the RESET# pin to V_{ID}. During this mode, formerly protected sectors can be programmed or erased by selecting the sector addresses. Once V_{ID} is removed from the RESET# pin, all the previously protected sectors are protected again. Figure 8.1 shows the algorithm, and Figure 17.12 on page 48 shows the timing diagrams, for this feature. If the WP#/ACC pin is at V_{IL}, sectors 0, 1, 140, and 141 will remain protected during the Temporary sector Unprotect mode.

Figure 8.1 Temporary Sector Unprotect Operation

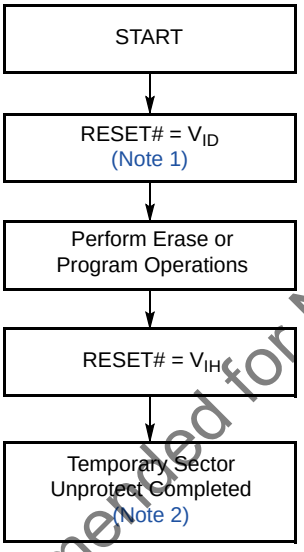

Not Recommended for New Design

Notes

1. *All protected sectors unprotected (If WP#/ACC = V_{IL}, sectors 0, 1, 140, and 141 will remain protected).*
2. *All previously protected sectors are protected once again.*

Figure 8.2 In-System Sector Protect/Unprotect Algorithms

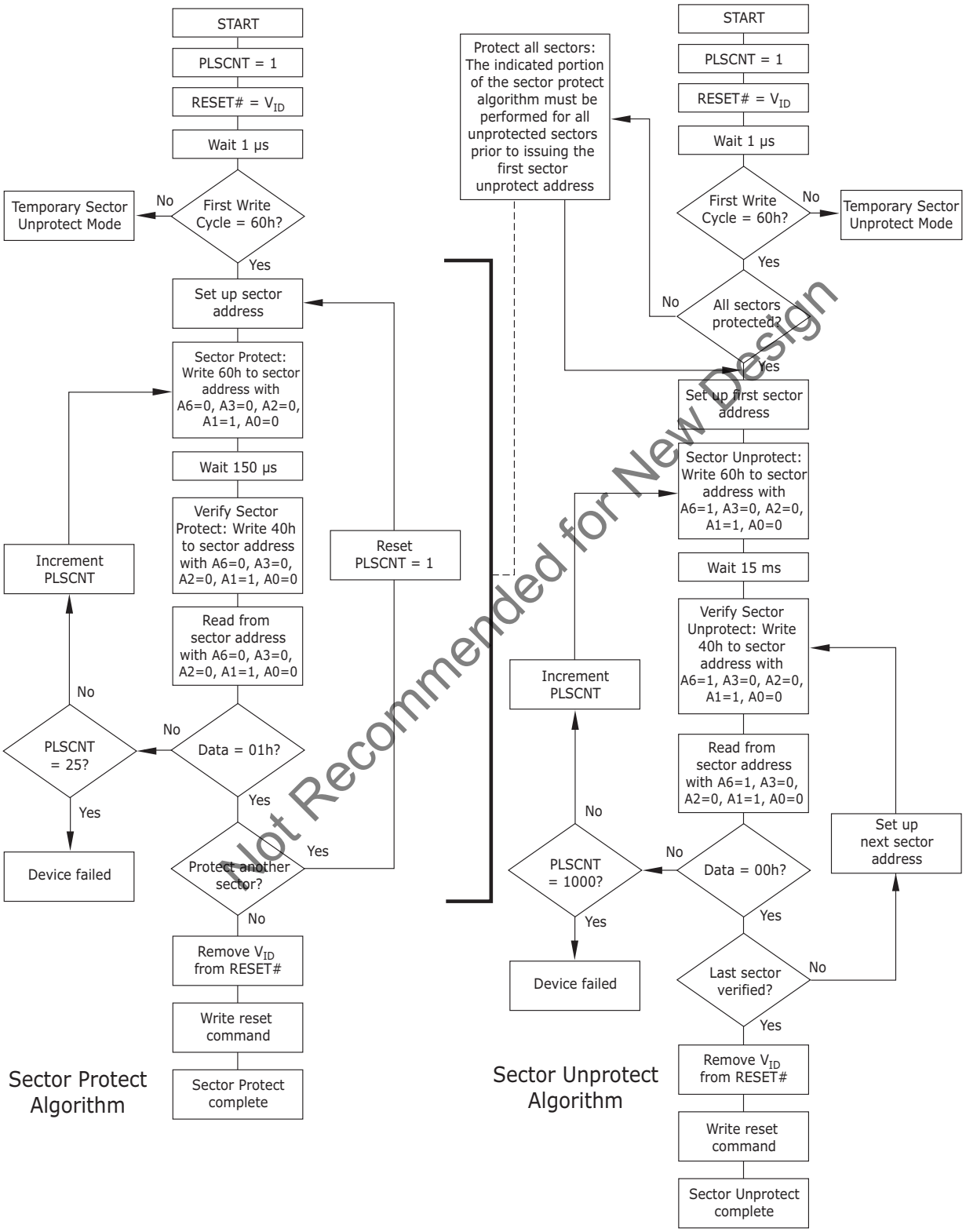

Not Recommended for New Design

8.13 Secured Silicon Sector Flash Memory Region

The Secured Silicon Sector feature provides a Flash memory region that enables permanent part identification through an Electronic Serial Number (ESN). The Secured Silicon Sector is 256 bytes in length, and uses a Secured Silicon Sector Indicator Bit (DQ7) to indicate whether or not the Secured Silicon Sector is locked when shipped from the factory. This bit is permanently set at the factory and cannot be changed, which prevents cloning of a factory locked part. This ensures the security of the ESN once the product is shipped to the field.

The product is available with the Secured Silicon Sector either factory locked or customer lockable. The factory-locked version is always protected when shipped from the factory, and has the Secured Silicon Sector Indicator Bit permanently set to a *1*. The customer-lockable version is shipped with the Secured Silicon Sector unprotected, allowing customers to utilize the that sector in any manner they choose. The customer-lockable version has the Secured Silicon Sector Indicator Bit permanently set to a *0*. Thus, the Secured Silicon Sector Indicator Bit prevents customer-lockable devices from being used to replace devices that are factory locked.

The system accesses the Secured Silicon Sector through a command sequence (see *Enter Secured Silicon Sector/Exit Secured Silicon Sector Command Sequence* on page 26). After the system has written the Enter Secured Silicon Sector command sequence, it may read the Secured Silicon Sector by using the addresses normally occupied by the boot sectors. This mode of operation continues until the system issues the Exit Secured Silicon Sector command sequence, or until power is removed from the device. On power-up, or following a hardware reset, the device reverts to sending commands to the first 256 bytes of Sector 0. *Note that the ACC function and unlock bypass modes are not available when the Secured Silicon Sector is enabled.*

Not Recommended for New Design

8.13.1 Factory Locked: Secured Silicon Sector Programmed and Protected At the Factory

In a factory locked device, the Secured Silicon Sector is protected when the device is shipped from the factory. The Secured Silicon Sector cannot be modified in any way. The device is preprogrammed with both a random number and a secure ESN. The 8-word random number is at addresses 000000h–000007h in word mode (or 000000h–00000Fh in byte mode). The secure ESN is programmed in the next 8 words at addresses 000008h–00000Fh (or 000010h–00001Fh in byte mode). The device is available preprogrammed with one of the following:

- A random, secure ESN only
- Customer code through Spansion programming services
- Both a random, secure ESN and customer code through Spansion programming services

Contact an your local sales office for details on using Spansion programming services.

8.13.2 Customer Lockable: Secured Silicon Sector NOT Programmed or Protected At the Factory

If the security feature is not required, the Secured Silicon Sector can be treated as an additional Flash memory space. The Secured Silicon Sector can be read any number of times, but can be programmed and locked only once. Note that the accelerated programming (ACC) and unlock bypass functions are not available when programming the Secured Silicon Sector.

The Secured Silicon Sector area can be protected using one of the following procedures:

- Write the three-cycle Enter Secured Silicon Sector Region command sequence, and then follow the in-system sector protect algorithm as shown in Figure 8.2 on page 20, except that *RESET# may be at either V_{IH} or V_{ID}*. This allows in-system protection of the Secured Silicon Sector Region without raising any device pin to a high voltage. Note that this method is only applicable to the Secured Silicon Sector.
- To verify the protect/unprotect status of the Secured Silicon Sector, follow the algorithm shown in Figure 8.3 on page 22.

Once the Secured Silicon Sector is locked and verified, the system must write the Exit Secured Silicon Sector Region command sequence to return to reading and writing the remainder of the array.

The Secured Silicon Sector lock must be used with caution since, once locked, there is no procedure available for unlocking the Secured Silicon Sector area and none of the bits in the Secured Silicon Sector memory space can be modified in any way.

Figure 8.3 Secured Silicon Sector Protect Verify

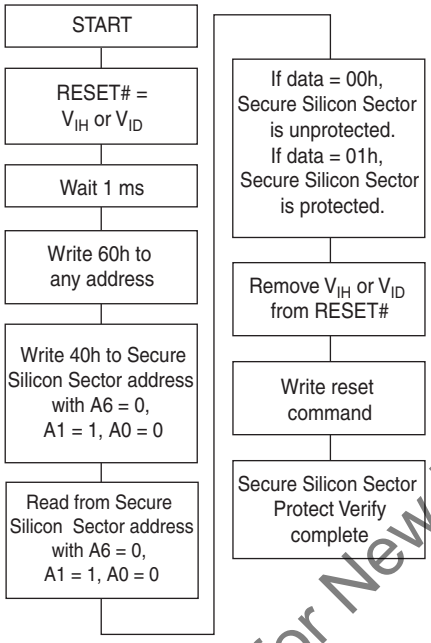

Not Recommended for New Design

8.14 Hardware Data Protection

The command sequence requirement of unlock cycles for programming or erasing provides data protection against inadvertent writes (refer to Table on page 30 for command definitions). In addition, the following hardware data protection measures prevent accidental erasure or programming, which might otherwise be caused by spurious system level signals during V_{CC} power-up and power-down transitions, or from system noise.

8.14.1 Low V_{CC} Write Inhibit

When V_{CC} is less than V_{LKO}, the device does not accept any write cycles. This protects data during V_{CC} power-up and power-down. The command register and all internal program/erase circuits are disabled, and the device resets to the read mode. Subsequent writes are ignored until V_{CC} is greater than V_{LKO}. The system must provide the proper signals to the control pins to prevent unintentional writes when V_{CC} is greater than V_{LKO}.

8.14.2 Write Pulse *Glitch* Protection

Noise pulses of less than 5 ns (typical) on OE#, CE# or WE# do not initiate a write cycle.

8.14.3 Logical Inhibit

Write cycles are inhibited by holding any one of OE# = V_{IL}, CE# = V_{IH} or WE# = V_{IH}. To initiate a write cycle, CE# and WE# must be a logical zero while OE# is a logical one.

8.14.4 Power-Up Write Inhibit

If WE# = CE# = V_{IL} and OE# = V_{IH} during power up, the device does not accept commands on the rising edge of WE#. The internal state machine is automatically reset to the read mode on power-up.

9. Common Flash Memory Interface (CFI)

The Common Flash Interface (CFI) specification outlines device and host system software interrogation handshake, which allows specific vendor-specified software algorithms to be used for entire families of devices. Software support can then be device-independent, JEDEC ID-independent, and forward- and backward-compatible for the specified flash device families. Flash vendors can standardize their existing interfaces for long-term compatibility.

This device enters the CFI Query mode when the system writes the CFI Query command, 98h, to address 55h in word mode (or address AAh in byte mode), any time the device is ready to read array data. The system can read CFI information at the addresses given in Table on page 23 to Table on page 25. To terminate reading CFI data, the system must write the reset command.The CFI Query mode is not accessible when the device is executing an Embedded Program or embedded Erase algorithm.

The system can also write the CFI query command when the device is in the autoselect mode. The device enters the CFI query mode, and the system can read CFI data at the addresses given in Table on page 23 to Table on page 25. The system must write the reset command to reading array data.

For further information, please refer to the CFI Specification and CFI Publication 100. Contact your local sales office for copies of these documents.

Not Recommended for New Design

CFI Query Identification String

Addresses (Word Mode)	Addresses (Byte Mode)	Data	Description
10h 11h 12h	20h 22h 24h	0051h 0052h 0059h	Query Unique ASCII string “QRY”
13h 14h	26h 28h	0002h 0000h	Primary OEM Command Set
15h 16h	2Ah 2Ch	0040h 0000h	Address for Primary Extended Table
17h 18h	2Eh 30h	0000h 0000h	Alternate OEM Command Set (00h = none exists)
19h 1Ah	32h 34h	0000h 0000h	Address for Alternate OEM Extended Table (00h = none exists)

System Interface String

Addresses (Word Mode)	Addresses (Byte Mode)	Data	Description
1Bh	36h	0027h	V_{CC} Min. (write/erase) D7–D4: volt, D3–D0: 100 millivolt
1Ch	38h	0036h	V_{CC} Max. (write/erase) D7–D4: volt, D3–D0: 100 millivolt
1Dh	3Ah	0000h	V_{PP} Min. voltage (00h = no V_{PP} pin present)
1Eh	3Ch	0000h	V_{PP} Max. voltage (00h = no V_{PP} pin present)
1Fh	3Eh	0003h	Typical timeout per single byte/word write 2^N µs
20h	40h	0000h	Typical timeout for Min. size buffer write 2^N µs (00h = not supported)
21h	42h	0009h	Typical timeout per individual block erase 2^N ms
22h	44h	0000h	Typical timeout for full chip erase 2^N ms (00h = not supported)
23h	46h	0005h	Max. timeout for byte/word write 2^N times typical
24h	48h	0000h	Max. timeout for buffer write 2^N times typical
25h	4Ah	0004h	Max. timeout per individual block erase 2^N times typical
26h	4Ch	0000h	Max. timeout for full chip erase 2^N times typical (00h = not supported)

Device Geometry Definition

Addresses (Word Mode)	Addresses (Byte Mode)	Data	Description
27h	4Eh	0017h	Device Size = 2^N byte
28h 29h	50h 52h	0002h 0000h	Flash Device Interface description (refer to CFI publication 100)
2Ah 2Bh	54h 56h	0000h 0000h	Max. number of byte in multi-byte write = 2^N (00h = not supported)
2Ch	58h	0003h	Number of Erase Block Regions within device
2Dh 2Eh 2Fh 30h	5Ah 5Ch 5Eh 60h	0007h 0000h 0020h 0000h	Erase Block Region 1 Information (refer to the CFI specification or CFI publication 100)
31h 32h 33h 34h	62h 64h 66h 68h	007Dh 0000h 0000h 0001h	Erase Block Region 2 Information (refer to the CFI specification or CFI publication 100)
35h 36h 37h 38h	6Ah 6Ch 6Eh 70h	0007h 0000h 0020h 0000h	Erase Block Region 3 Information (refer to the CFI specification or CFI publication 100)
39h 3Ah 3Bh 3Ch	72h 74h 76h 78h	0000h 0000h 0000h 0000h	Erase Block Region 4 Information (refer to the CFI specification or CFI publication 100)

Not Recommended for New Design

Primary Vendor-Specific Extended Query

Addresses (Word Mode)	Addresses (Byte Mode)	Data	Description
40h 41h 42h	80h 82h 84h	0050h 0052h 0049h	Query-unique ASCII string “PRI”
43h	86h	0031h	Major version number, ASCII (reflects modifications to the silicon)
44h	88h	0033h	Minor version number, ASCII (reflects modifications to the CFI table)
45h	8Ah	000Ch	Address Sensitive Unlock (Bits 1-0) 0 = Required, 1 = Not Required Silicon Revision Number (Bits 7-2)
46h	8Ch	0002h	Erase Suspend 0 = Not Supported, 1 = To Read Only, 2 = To Read & Write
47h	8Eh	0001h	Sector Protect 0 = Not Supported, X = Number of sectors per group
48h	90h	0001h	Sector Temporary Unprotect 00 = Not Supported, 01 = Supported
49h	92h	0004h	Sector Protect/Unprotect scheme 01 =29F040 mode, 02 = 29F016 mode, 03 = 29F400, 04 = 29LV800 mode
4Ah	94h	0077h	Simultaneous Operation 00 = Not Supported, X = Number of Sectors (excluding Bank 1)
4Bh	96h	0000h	Burst Mode Type 00 = Not Supported, 01 = Supported
4Ch	98h	0000h	Page Mode Type 00 = Not Supported, 01 = 4 Word Page, 02 = 8 Word Page
4Dh	9Ah	0085h	ACC (Acceleration) Supply Minimum 00h = Not Supported, D7-D4: Volt, D3-D0: 100 mV
4Eh	9Ch	0095h	ACC (Acceleration) Supply Maximum 00h = Not Supported, D7-D4: Volt, D3-D0: 100 mV
4Fh	9Eh	0001h	Top/Bottom Boot Sector Flag 00h = Uniform device, 01h = 8 x 8 Kbyte Sectors, Top And Bottom Boot with Write Protect, 02h = Bottom Boot Device, 03h = Top Boot Device, 04h= Both Top and Bottom
50h	A0h	0001h	Program Suspend 0 = Not supported, 1 = Supported
57h	AEh	0004h	Bank Organization 00 = Data at 4Ah is zero, X = Number of Banks
58h	B0h	0017h	Bank 1 Region Information X = Number of Sectors in Bank 1
59h	B2h	0030h	Bank 2 Region Information X = Number of Sectors in Bank 2
5Ah	B4h	0030h	Bank 3 Region Information X = Number of Sectors in Bank 3
5Bh	B6h	0017h	Bank 4 Region Information X = Number of Sectors in Bank 4

Not Recommended for New Design

10. Command Definitions

Writing specific address and data commands or sequences into the command register initiates device operations. Table on page 30 defines the valid register command sequences. *Writing incorrect address and data values or writing them in the improper sequence may place the device in an unknown state. A reset command is then required to return the device to reading array data.*

All addresses are latched on the falling edge of WE# or CE#, whichever happens later. All data is latched on the rising edge of WE# or CE#, whichever happens first. Refer to *AC Characteristics* on page 41 for timing diagrams.

10.1 Reading Array Data

The device is automatically set to reading array data after device power-up. No commands are required to retrieve data. Each bank is ready to read array data after completing an Embedded Program or Embedded Erase algorithm.

After the device accepts an Erase Suspend command, the corresponding bank enters the erase-suspend-read mode, after which the system can read data from any non-erase-suspended sector within the same bank. The system can read array data using the standard read timing, except that if it reads at an address within erase-suspended sectors, the device outputs status data. After completing a programming operation in the Erase Suspend mode, the system may once again read array data with the same exception. See *Erase Suspend/Erase Resume Commands* on page 30 for more information.

The system *must* issue the reset command to return a bank to the read (or erase-suspend-read) mode if DQ5 goes high during an active program or erase operation, or if the bank is in the autoselect mode. See *Reset Command* on page 26 for more information.

See *Requirements for Reading Array Data* on page 10 for more information. *Read-Only Operations* on page 41 provides the read parameters, and Figure 17.1 on page 41 shows the timing diagram.

10.2 Reset Command

Writing the reset command resets the banks to the read or erase-suspend-read mode. Address bits are don't cares for this command.

The reset command may be written between the sequence cycles in an erase command sequence before erasing begins. This resets the bank to which the system was writing to the read mode. Once erasure begins, however, the device ignores reset commands until the operation is complete.

The reset command may be written between the sequence cycles in a program command sequence before programming begins. This resets the bank to which the system was writing to the read mode. If the program command sequence is written to a bank that is in the Erase Suspend mode, writing the reset command returns that bank to the erase-suspend-read mode. Once programming begins, however, the device ignores reset commands until the operation is complete.

The reset command may be written between the sequence cycles in an autoselect command sequence. Once in the autoselect mode, the reset command must be written to return to the read mode. If a bank entered the autoselect mode while in the Erase Suspend mode, writing the reset command returns that bank to the erase-suspend-read mode.

If DQ5 goes high during a program or erase operation, writing the reset command returns the banks to the read mode (or erase-suspend-read mode if that bank was in Erase Suspend).

Not Recommended for New Design

10.3 Autoselect Command Sequence

The autoselect command sequence allows the host system to access the manufacturer and device codes, and determine whether or not a sector is protected. The autoselect command sequence may be written to an address within a bank that is either in the read or erase-suspend-read mode. The autoselect command may not be written while the device is actively programming or erasing in another bank.

The autoselect command sequence is initiated by first writing two unlock cycles. This is followed by a third write cycle that contains the bank address and the autoselect command. The bank then enters the autoselect mode. The system may read any number of autoselect codes without re-initiating the command sequence.

Table on page 30 shows the address and data requirements. To determine sector protection information, the system must write to the appropriate bank address (BA) and sector address (SA). Table on page 15 shows the address range and bank number associated with each sector.

The system must write the reset command to return to the read mode (or erase-suspend-read mode if the bank was previously in Erase Suspend).

10.4 Enter Secured Silicon Sector/Exit Secured Silicon Sector Command Sequence

The Secured Silicon Sector region provides a secured data area containing a random, sixteen-byte electronic serial number (ESN). The system can access the Secured Silicon Sector region by issuing the three-cycle Enter Secured Silicon Sector command sequence. The device continues to access the Secured Silicon Sector region until the system issues the four-cycle Exit Secured

Silicon Sector command sequence. The Exit Secured Silicon Sector command sequence returns the device to normal operation. The Secured Silicon Sector is not accessible when the device is executing an Embedded Program or embedded Erase algorithm. Table on page 30 shows the address and data requirements for both command sequences. See also *Secured Silicon Sector Flash Memory Region* on page 21 for further information. *Note that the ACC function and unlock bypass modes are not available when the Secured Silicon Sector is enabled.*

10.5 Byte/Word Program Command Sequence

The system may program the device by word or byte, depending on the state of the BYTE# pin. Programming is a four-bus-cycle operation. The program command sequence is initiated by writing two unlock write cycles, followed by the program set-up command. The program address and data are written next, which in turn initiate the Embedded Program algorithm. The system is *not* required to provide further controls or timings. The device automatically provides internally generated program pulses and verifies the programmed cell margin. Table on page 30 shows the address and data requirements for the byte program command sequence.

When the Embedded Program algorithm is complete, that bank then returns to the read mode and addresses are no longer latched. The system can determine the status of the program operation by using DQ7, DQ6, or RY/BY#. Refer to *Write Operation Status* on page 31 for information on these status bits.

Any commands written to the device during the Embedded Program Algorithm are ignored. Note that a **hardware reset** immediately terminates the program operation. The program command sequence should be reinitiated once that bank has returned to the read mode, to ensure data integrity. *Note that the Secured Silicon Sector, autoselect, and CFI functions are unavailable when a program operation is in progress.*

Programming is allowed in any sequence and across sector boundaries. **A bit cannot be programmed from *0* back to a *1*.** Attempting to do so may cause that bank to set DQ5 = 1, or cause the DQ7 and DQ6 status bits to indicate the operation was successful. However, a succeeding read will show that the data is still 0. Only erase operations can convert a 0 to a *1*.

10.5.1 Unlock Bypass Command Sequence

The unlock bypass feature allows the system to program bytes or words to a bank faster than using the standard program command sequence. The unlock bypass command sequence is initiated by first writing two unlock cycles. This is followed by a third write cycle containing the unlock bypass command, 20h. That bank then enters the unlock bypass mode. A two-cycle unlock bypass program command sequence is all that is required to program in this mode. The first cycle in this sequence contains the unlock bypass program command, A0h; the second cycle contains the program address and data. Additional data is programmed in the same manner. This mode dispenses with the initial two unlock cycles required in the standard program command sequence, resulting in faster total programming time. Table on page 30 shows the requirements for the command sequence.

During the unlock bypass mode, only the Unlock Bypass Program and Unlock Bypass Reset commands are valid. To exit the unlock bypass mode, the system must issue the two-cycle unlock bypass reset command sequence. (See Table on page 30).

The device offers accelerated program operations through the WP#/ACC pin. When the system asserts V_{HH} on the WP#/ACC pin, the device automatically enters the Unlock Bypass mode. The system may then write the two-cycle Unlock Bypass program command sequence. The device uses the higher voltage on the WP#/ACC pin to accelerate the operation. *Note that the WP#/ACC pin must not be at V_{HH} for any operation other than accelerated programming, or device damage may result. In addition, the WP#/ACC pin must not be left floating or unconnected; inconsistent behavior of the device may result*.

Figure 10.1 on page 28 illustrates the algorithm for the program operation. Refer to *Erase and Program Operations* on page 44 for parameters, and Figure 17.5 on page 45 for timing diagrams.

Not Recommended for New Design

Figure 10.1 Program Operation

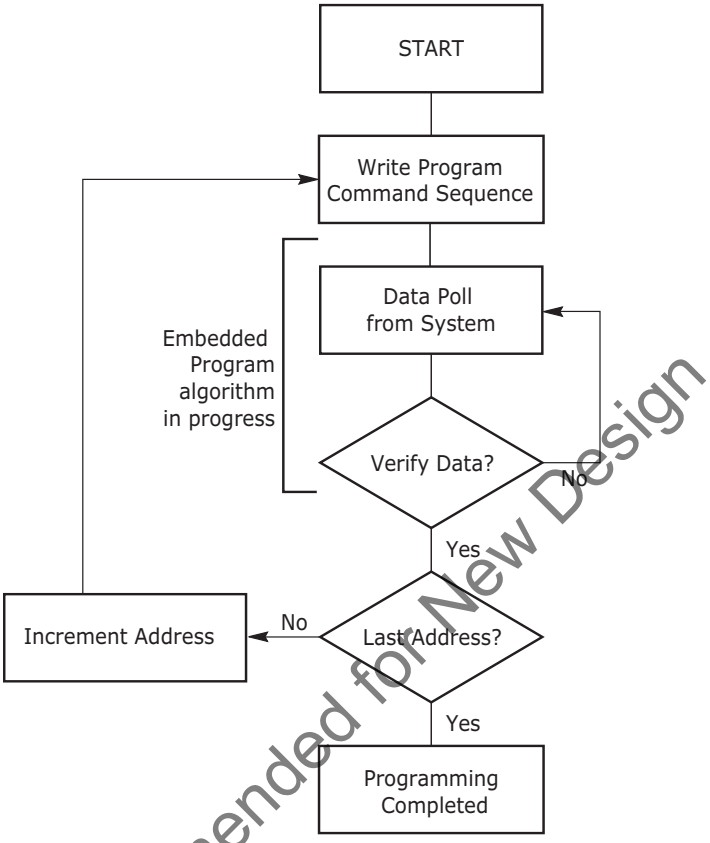

Not Recommended for New Design

Note
1. See Table on page 30 for program command sequence.

10.6 Chip Erase Command Sequence

Chip erase is a six bus cycle operation. The chip erase command sequence is initiated by writing two unlock cycles, followed by a set-up command. Two additional unlock write cycles are then followed by the chip erase command, which in turn invokes the Embedded Erase algorithm. The device does *not* require the system to preprogram prior to erase. The Embedded Erase algorithm automatically preprograms and verifies the entire memory for an all zero data pattern prior to electrical erase. The system is not required to provide any controls or timings during these operations. Table on page 30 shows the address and data requirements for the chip erase command sequence.

When the Embedded Erase algorithm is complete, that bank returns to the read mode and addresses are no longer latched. The system can determine the status of the erase operation by using DQ7, DQ6, DQ2, or RY/BY#. Refer to *Write Operation Status* on page 31 for information on these status bits.

Any commands written during the chip erase operation are ignored. However, note that a **hardware reset** immediately terminates the erase operation. If that occurs, the chip erase command sequence should be reinitiated once that bank has returned to reading array data, to ensure data integrity. *Note that the Secured Silicon Sector, autoselect, and CFI functions are unavailable when an erase operation is in progress.*

Figure 10.2 on page 29 illustrates the algorithm for the erase operation. Refer to *Erase and Program Operations* on page 44 for parameters, and Figure 17.7 on page 46 for timing diagrams.

10.7 Sector Erase Command Sequence

Sector erase is a six bus cycle operation. The sector erase command sequence is initiated by writing two unlock cycles, followed by a set-up command. Two additional unlock cycles are written, and are then followed by the address of the sector to be erased, and the sector erase command. Table on page 30 shows the address and data requirements for the sector erase command sequence.

The device does *not* require the system to preprogram prior to erase. The Embedded Erase algorithm automatically programs and verifies the entire sector for an all zero data pattern prior to electrical erase. The system is not required to provide any controls or timings during these operations.

After the command sequence is written, a sector erase time-out of 80 µs occurs. During the time-out period, additional sector addresses and sector erase commands may be written. Loading the sector erase buffer may be done in any sequence, and the number of sectors may be from one sector to all sectors. The time between these additional cycles must be less than 80 µs, otherwise erasure may begin. Any sector erase address and command following the exceeded time-out may or may not be accepted. It is recommended that processor interrupts be disabled during this time to ensure all commands are accepted. The interrupts can be re-enabled after the last Sector Erase command is written. **Any command other than Sector Erase or Erase Suspend during the time-out period resets that bank to the read mode.** The system must rewrite the command sequence and any additional addresses and commands.

The system can monitor DQ3 to determine if the sector erase timer has timed out (See the section on DQ3: Sector Erase Timer.). The time-out begins from the rising edge of the final WE# or CE# pulse (first rising edge) in the command sequence.

When the Embedded Erase algorithm is complete, the bank returns to reading array data and addresses are no longer latched. Note that while the Embedded Erase operation is in progress, the system can read data from the non-erasing bank. The system can determine the status of the erase operation by reading DQ7, DQ6, DQ2, or RY/BY# in the erasing bank. Refer to *Write Operation Status* on page 31 for information on these status bits.

Once the sector erase operation has begun, only the Erase Suspend command is valid. All other commands are ignored. However, note that a **hardware reset** immediately terminates the erase operation. If that occurs, the sector erase command sequence should be reinitiated once that bank has returned to reading array data, to ensure data integrity. *Note that the Secured Silicon Sector, autoselect, and CFI functions are unavailable when an erase operation is in progress.*

Figure 10.2 on page 29 illustrates the algorithm for the erase operation. Refer to *Erase and Program Operations* on page 44 for parameters, and Figure 17.7 on page 46 for timing diagrams.

Not Recommended for New Design

Figure 10.2 Erase Operation

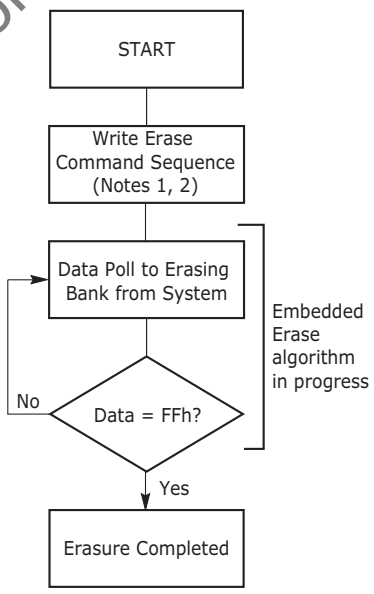

Notes

1. *See Table on page 30 for erase command sequence.*
2. *See the section on DQ3 for information on the sector erase timer.*

10.8 Erase Suspend/Erase Resume Commands

The Erase Suspend command, B0h, allows the system to interrupt a sector erase operation and then read data from, or program data to, any sector not selected for erasure. The bank address is required when writing this command. This command is valid only during the sector erase operation, including the 80 µs time-out period during the sector erase command sequence. The Erase Suspend command is ignored if written during the chip erase operation or Embedded Program algorithm. The bank address must contain one of the sectors currently selected for erase.

When the Erase Suspend command is written during the sector erase operation, the device requires a maximum of 20 µs to suspend the erase operation. However, when the Erase Suspend command is written during the sector erase time-out, the device immediately terminates the time-out period and suspends the erase operation.

After the erase operation has been suspended, the bank enters the erase-suspend-read mode. The system can read data from or program data to any sector not selected for erasure. (The device *erase suspends* all sectors selected for erasure.) Reading at any address within erase-suspended sectors produces status information on DQ7–DQ0. The system can use DQ7, or DQ6 and DQ2 together, to determine if a sector is actively erasing or is erase-suspended. Refer to *Write Operation Status* on page 31 for information on these status bits.

After an erase-suspended program operation is complete, the bank returns to the erase-suspend-read mode. The system can determine the status of the program operation using the DQ7 or DQ6 status bits, just as in the standard Byte Program operation. Refer to *Write Operation Status* on page 31 for more information.

In the erase-suspend-read mode, the system can also issue the autoselect command sequence. The device allows reading autoselect codes even at addresses within erasing sectors, since the codes are not stored in the memory array. When the device exits the autoselect mode, the device reverts to the Erase Suspend mode, and is ready for another valid operation. Refer to *Autoselect Mode* on page 16 and *Autoselect Command Sequence* on page 26 for details.

To resume the sector erase operation, the system must write the Erase Resume command. The bank address of the erase-suspended bank is required when writing this command. Further writes of the Resume command are ignored. Another Erase Suspend command can be written after the chip has resumed erasing.

Not Recommended for New Design

S29JL064H Command Definitions

Command Sequence (Note 1)			Cycles	Bus Cycles (Notes 2–5)											
				First		Second		Third		Fourth		Fifth		Sixth	
				Addr	Data	Addr	Data	Addr	Data	Addr	Data	Addr	Data	Addr	Data
Read (Note 6)			1	RA	RD										
Reset (Note 7)			1	XXX	F0										
Autoselect (Note 8)	Manufacturer ID	Word	4	555	AA	2AA	55	(BA)555	90	(BA)X00	01				
		Byte		AAA		555		(BA)AAA							
	Device ID (Note 9)	Word	6	555	AA	2AA	55	(BA)555	90	(BA)X01	7E	(BA)X0E	02	(BA)X0F	01
		Byte		AAA		555		(BA)AAA		(BA)X02		(BA)X1C		(BA)X1E	
	Secured Silicon Sector Factory Protect (Note 10)	Word	4	555	AA	2AA	55	(BA)555	90	(BA)X03	81/01				
		Byte		AAA		555		(BA)AAA		(BA)X06					
	Sector/Sector Block Protect Verify (Note 11)	Word	4	555	AA	2AA	55	(BA)555	90	(SA)X02	00/01				
		Byte		AAA		555		(BA)AAA		(SA)X04					
Enter Secured Silicon Sector Region		Word	3	555	AA	2AA	55	555	88						
		Byte		AAA		555		AAA							
Exit Secured Silicon Sector Region		Word	4	555	AA	2AA	55	555	90	XXX	00				
		Byte		AAA		555		AAA							
Program		Word	4	555	AA	2AA	55	555	A0	PA	PD				
		Byte		AAA		555		AAA							
Unlock Bypass		Word	3	555	AA	2AA	55	555	20						
		Byte		AAA		555		AAA							
Unlock Bypass Program (Note 12)			2	XXX	A0	PA	PD								
Unlock Bypass Reset (Note 13)			2	XXX	90	XXX	00								

S29JL064H Command Definitions

Command Sequence (Note 1)		Cycles	Bus Cycles (Notes 2–5)											
			First		Second		Third		Fourth		Fifth		Sixth	
			Addr	Data	Addr	Data	Addr	Data	Addr	Data	Addr	Data	Addr	Data
Chip Erase	Word	6	555	AA	2AA	55	555	80	555	AA	2AA	55	555	10
	Byte		AAA		555		AAA		AAA		555		AAA	
Sector Erase	Word	6	555	AA	2AA	55	555	80	555	AA	2AA	55	SA	30
	Byte		AAA		555		AAA		AAA		555			
Erase Suspend (Note 14)		1	BA	B0										
Erase Resume (Note 15)		1	BA	30										
CFI Query (Note 15)	Word	1	55	98										
	Byte		AA											

Legend

X = Don't care

RA = Address of the memory location to be read.

RD = Data read from location RA during read operation.

PA = Address of the memory location to be programmed. Addresses latch on the falling edge of the WE# or CE# pulse, whichever happens later.

PD = Data to be programmed at location PA. Data latches on the rising edge of WE# or CE# pulse, whichever happens first.

SA = Address of the sector to be verified (in autoselect mode) or erased. Address bits A21–A12 uniquely select any sector. Refer to Table on page 15 for information on sector addresses.

BA = Address of the bank that is being switched to autoselect mode, is in bypass mode, or is being erased. A21–A19 uniquely select a bank.

Notes

1. *See Table on page 9 for description of bus operations.*
2. *All values are in hexadecimal.*
3. *Except for the read cycle and the fourth, fifth, and sixth cycle of the autoselect command sequence, all bus cycles are write cycles.*
4. *Data bits DQ15–DQ8 are don't care in command sequences, except for RD and PD.*
5. *Unless otherwise noted, address bits A21–A11 are don't cares for unlock and command cycles, unless SA or PA is required.*
6. *No unlock or command cycles required when bank is reading array data.*
7. *The Reset command is required to return to the read mode (or to the erase-suspend-read mode if previously in Erase Suspend) when a bank is in the autoselect mode, or if DQ5 goes high (while the bank is providing status information).*
8. *The fourth cycle of the autoselect command sequence is a read cycle. The system must provide the bank address to obtain the manufacturer ID, device ID, or Secured Silicon Sector factory protect information. Data bits DQ15–DQ8 are don't care. While reading the autoselect addresses, the bank address must be the same until a reset command is given. See Autoselect Command Sequence on page 26 for more information.*
9. *The device ID must be read across the fourth, fifth, and sixth cycles.*
10. *The data is 81h for factory locked, 41h for customer locked, and 01h for not factory/customer locked.*
11. *The data is 00h for an unprotected sector/sector block and 01h for a protected sector/sector block.*
12. *The Unlock Bypass command is required prior to the Unlock Bypass Program command.*
13. *The Unlock Bypass Reset command is required to return to the read mode when the bank is in the unlock bypass mode.*
14. *The system may read and program in non-erasing sectors, or enter the autoselect mode, when in the Erase Suspend mode. The Erase Suspend command is valid only during a sector erase operation, and requires the bank address.*
15. *The Erase Resume command is valid only during the Erase Suspend mode, and requires the bank address. Command is valid when device is ready to read array data or when device is in autoselect mode.*

Not Recommended for New Design

11. Write Operation Status

The device provides several bits to determine the status of a program or erase operation: DQ2, DQ3, DQ5, DQ6, and DQ7. Table on page 36 and the following subsections describe the function of these bits. DQ7 and DQ6 each offer a method for determining whether a program or erase operation is complete or in progress. The device also provides a hardware-based output signal, RY/BY#, to determine whether an Embedded Program or Erase operation is in progress or has been completed.

11.1 DQ7: Data# Polling

The Data# Polling bit, DQ7, indicates to the host system whether an Embedded Program or Erase algorithm is in progress or completed, or whether a bank is in Erase Suspend. Data# Polling is valid after the rising edge of the final WE# pulse in the command sequence.

During the Embedded Program algorithm, the device outputs on DQ7 the complement of the datum programmed to DQ7. This DQ7 status also applies to programming during Erase Suspend. When the Embedded Program algorithm is complete, the device outputs the datum programmed to DQ7. The system must provide the program address to read valid status information on DQ7. If a program address falls within a protected sector, Data# Polling on DQ7 is active for approximately 1 µs, then that bank returns to the read mode.

During the Embedded Erase algorithm, Data# Polling produces a *0* on DQ7. When the Embedded Erase algorithm is complete, or if the bank enters the Erase Suspend mode, Data# Polling produces a *1* on DQ7. The system must provide an address within any of the sectors selected for erasure to read valid status information on DQ7.

After an erase command sequence is written, if all sectors selected for erasing are protected, Data# Polling on DQ7 is active for approximately 100 µs, then the bank returns to the read mode. If not all selected sectors are protected, the Embedded Erase algorithm erases the unprotected sectors, and ignores the selected sectors that are protected. However, if the system reads DQ7 at an address within a protected sector, the status may not be valid.

When the system detects DQ7 has changed from the complement to true data, it can read valid data at DQ15–DQ0 (or DQ7–DQ0 for x8-only device) on the *following* read cycles. Just prior to the completion of an Embedded Program or Erase operation, DQ7 may change asynchronously with DQ15–DQ8 (DQ7–DQ0 for x8-only device) while Output Enable (OE#) is asserted low. That is, the device may change from providing status information to valid data on DQ7. Depending on when the system samples the DQ7 output, it may read the status or valid data. Even if the device has completed the program or erase operation and DQ7 has valid data, the data outputs on DQ15–DQ0 may be still invalid. Valid data on DQ15–DQ0 (or DQ7–DQ0 for x8-only device) will appear on successive read cycles.

Table on page 36 shows the outputs for Data# Polling on DQ7. Figure 11.1 on page 33 shows the Data# Polling algorithm. Figure 17.9 on page 47 shows the Data# Polling timing diagram.

Not Recommended for New Design

Figure 11.1 Data# Polling Algorithm

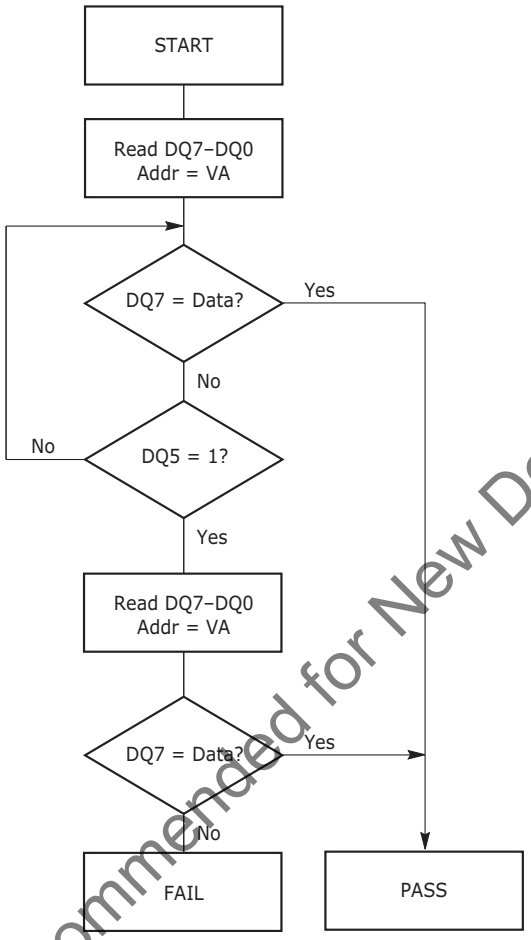

Not Recommended for New Design

Notes

1. *VA = Valid address for programming. During a sector erase operation, a valid address is any sector address within the sector being erased. During chip erase, a valid address is any non-protected sector address.*
2. *DQ7 should be rechecked even if DQ5 = 1 because DQ7 may change simultaneously with DQ5.*

11.2 RY/BY#: Ready/Busy#

The RY/BY# is a dedicated, open-drain output pin which indicates whether an Embedded Algorithm is in progress or complete. The RY/BY# status is valid after the rising edge of the final WE# pulse in the command sequence. Since RY/BY# is an open-drain output, several RY/BY# pins can be tied together in parallel with a pull-up resistor to V_{CC}.

If the output is low (Busy), the device is actively erasing or programming. (This includes programming in the Erase Suspend mode.) If the output is high (Ready), the device is in the read mode, the standby mode, or one of the banks is in the erase-suspend-read mode.

Table on page 36 shows the outputs for RY/BY#.

11.3 DQ6: Toggle Bit I

Toggle Bit I on DQ6 indicates whether an Embedded Program or Erase algorithm is in progress or complete, or whether the device has entered the Erase Suspend mode. Toggle Bit I may be read at any address, and is valid after the rising edge of the final WE# pulse in the command sequence (prior to the program or erase operation), and during the sector erase time-out.

During an Embedded Program or Erase algorithm operation, successive read cycles to any address cause DQ6 to toggle. The system may use either OE# or CE# to control the read cycles. When the operation is complete, DQ6 stops toggling.

After an erase command sequence is written, if all sectors selected for erasing are protected, DQ6 toggles for approximately 100 µs, then returns to reading array data. If not all selected sectors are protected, the Embedded Erase algorithm erases the unprotected sectors, and ignores the selected sectors that are protected.

The system can use DQ6 and DQ2 together to determine whether a sector is actively erasing or is erase-suspended. When the device is actively erasing (that is, the Embedded Erase algorithm is in progress), DQ6 toggles. When the device enters the Erase Suspend mode, DQ6 stops toggling. However, the system must also use DQ2 to determine which sectors are erasing or erase-suspended. Alternatively, the system can use DQ7 (see *DQ7: Data# Polling* on page 32).If a program address falls within a protected sector, DQ6 toggles for approximately 1 µs after the program command sequence is written, then returns to reading array data.

DQ6 also toggles during the erase-suspend-program mode, and stops toggling once the Embedded Program algorithm is complete.

Not Recommended for New Design

Figure 11.2 Toggle Bit Algorithm

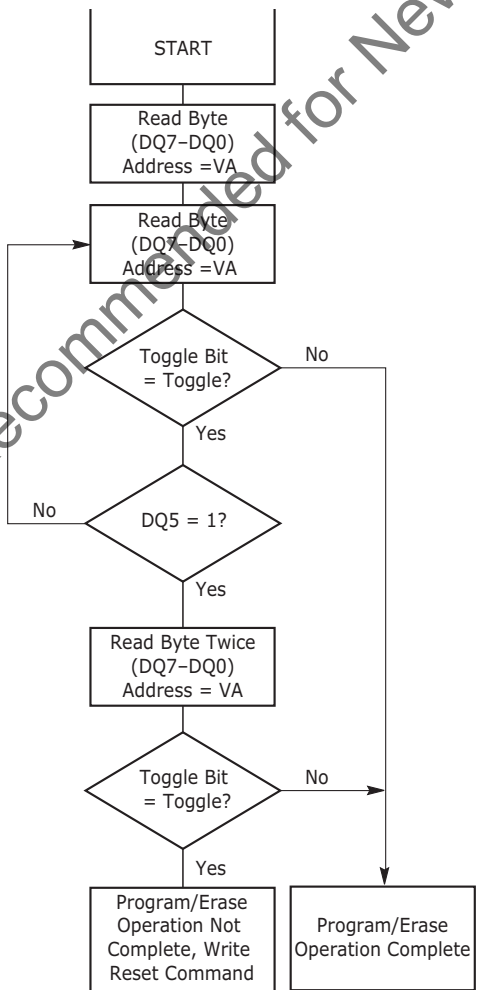

Note

The system should recheck the toggle bit even if DQ5 = 1 because the toggle bit may stop toggling as DQ5 changes to 1. See the subsections on DQ6 and DQ2 for more information.

11.4 DQ2: Toggle Bit II

The *Toggle Bit II* on DQ2, when used with DQ6, indicates whether a particular sector is actively erasing (that is, the Embedded Erase algorithm is in progress), or whether that sector is erase-suspended. Toggle Bit II is valid after the rising edge of the final WE# pulse in the command sequence.

DQ2 toggles when the system reads at addresses within those sectors that have been selected for erasure. (The system may use either OE# or CE# to control the read cycles.) But DQ2 cannot distinguish whether the sector is actively erasing or is erase-suspended. DQ6, by comparison, indicates whether the device is actively erasing, or is in Erase Suspend, but cannot distinguish which sectors are selected for erasure. Thus, both status bits are required for sector and mode information. Refer to Table on page 36 to compare outputs for DQ2 and DQ6.

Figure 11.2 on page 34 shows the toggle bit algorithm in flowchart form, and *DQ2: Toggle Bit II* on page 35 explains the algorithm. See also *DQ6: Toggle Bit I* on page 34. Figure 17.10 on page 47 shows the toggle bit timing diagram. Figure 17.11 on page 48 shows the differences between DQ2 and DQ6 in graphical form.

11.5 Reading Toggle Bits DQ6/DQ2

Refer to Figure 11.2 on page 34 for the following discussion. Whenever the system initially begins reading toggle bit status, it must read DQ15–DQ0 (or DQ7–DQ0 for x8-only device) at least twice in a row to determine whether a toggle bit is toggling. Typically, the system would note and store the value of the toggle bit after the first read. After the second read, the system would compare the new value of the toggle bit with the first. If the toggle bit is not toggling, the device has completed the program or erase operation. The system can read array data on DQ15–DQ0 (or DQ7–DQ0 for x8-only device) on the following read cycle.

However, if after the initial two read cycles, the system determines that the toggle bit is still toggling, the system also should note whether the value of DQ5 is high (see the section on DQ5). If it is, the system should then determine again whether the toggle bit is toggling, since the toggle bit may have stopped toggling just as DQ5 went high. If the toggle bit is no longer toggling, the device has successfully completed the program or erase operation. If it is still toggling, the device did not completed the operation successfully, and the system must write the reset command to return to reading array data.

The remaining scenario is that the system initially determines that the toggle bit is toggling and DQ5 has not gone high. The system may continue to monitor the toggle bit and DQ5 through successive read cycles, determining the status as described in the previous paragraph. Alternatively, it may choose to perform other system tasks. In this case, the system must start at the beginning of the algorithm when it returns to determine the status of the operation (top of Figure 11.2 on page 34).

Not Recommended for New Design

11.6 DQ5: Exceeded Timing Limits

DQ5 indicates whether the program or erase time has exceeded a specified internal pulse count limit. Under these conditions DQ5 produces a *1*, indicating that the program or erase cycle was not successfully completed.

The device may output a *1* on DQ5 if the system tries to program a *1* to a location that was previously programmed to *0*. **Only an erase operation can change a *0* back to a *1*.** Under this condition, the device halts the operation, and when the timing limit has been exceeded, DQ5 produces a *1*.

Under both these conditions, the system must write the reset command to return to the read mode (or to the erase-suspend-read mode if a bank was previously in the erase-suspend-program mode).

11.7 DQ3: Sector Erase Timer

After writing a sector erase command sequence, the system may read DQ3 to determine whether or not erasure has begun. (The sector erase timer does not apply to the chip erase command.) If additional sectors are selected for erasure, the entire time-out also applies after each additional sector erase command. When the time-out period is complete, DQ3 switches from a *0* to a *1*. If the time between additional sector erase commands from the system can be assumed to be less than 50 µs, the system need not monitor DQ3. See also *Sector Erase Command Sequence* on page 29.

After the sector erase command is written, the system should read the status of DQ7 (Data# Polling) or DQ6 (Toggle Bit I) to ensure that the device has accepted the command sequence, and then read DQ3. If DQ3 is *1*, the Embedded Erase algorithm has begun; all further commands (except Erase Suspend) are ignored until the erase operation is complete. If DQ3 is *0*, the device will accept additional sector erase commands. To ensure the command has been accepted, the system software should check the status of

DQ3 prior to and following each subsequent sector erase command. If DQ3 is high on the second status check, the last command might not have been accepted.

Table on page 36 shows the status of DQ3 relative to the other status bits

Write Operation Status

Status			DQ7 (Note 2)	DQ6	DQ5 (Note 1)	DQ3	DQ2 (Note 2)	RY/BY#
Standard Mode	Embedded Program Algorithm		DQ7#	Toggle	0	N/A	No toggle	0
	Embedded Erase Algorithm		0	Toggle	0	1	Toggle	0
Erase Suspend Mode	Erase-Suspend-Read	Erase Suspended Sector	1	No toggle	0	N/A	Toggle	1
		Non-Erase Suspended Sector	Data	Data	Data	Data	Data	1
	Erase-Suspend-Program		DQ7#	Toggle	0	N/A	N/A	0

Notes

1. *DQ5 switches to 1 when an Embedded Program or Embedded Erase operation has exceeded the maximum timing limits. Refer to the section on DQ5 for more information.*
2. *DQ7 and DQ2 require a valid address when reading status information. Refer to the appropriate subsection for further details.*
3. *When reading write operation status bits, the system must always provide the bank address where the Embedded Algorithm is in progress. The device outputs array data if the system addresses a non-busy bank.*

Not Recommended for New Design

12. Absolute Maximum Ratings

Storage Temperature, Plastic Packages	–65°C to +150°C
Ambient Temperature with Power Applied	–65°C to +125°C
Voltage with Respect to Ground	
V_{CC} (Note 1)	–0.5 V to +4.0 V
A9, OE#, and RESET# (Note 2)	–0.5 V to +12.5 V
WP#/ACC	–0.5 V to +10.5 V
All other pins (Note 1)	–0.5 V to V_{CC} +0.5 V
Output Short Circuit Current (Note 3)	200 mA

Notes

1. *Minimum DC voltage on input or I/O pins is –0.5 V. During voltage transitions, input or I/O pins may overshoot V_{SS} to –2.0 V for periods of up to 20 ns. Maximum DC voltage on input or I/O pins is V_{CC} +0.5 V. See Figure 12.1 on page 36. During voltage transitions, input or I/O pins may overshoot to V_{CC} +2.0 V for periods up to 20 ns. See Figure 12.2 on page 37.*
2. *Minimum DC input voltage on pins A9, OE#, RESET#, and WP#/ACC is –0.5 V. During voltage transitions, A9, OE#, WP#/ACC, and RESET# may overshoot V_{SS} to –2.0 V for periods of up to 20 ns. See Figure 12.1 on page 36. Maximum DC input voltage on pin A9 is +12.5 V which may overshoot to +14.0 V for periods up to 20 ns. Maximum DC input voltage on WP#/ACC is +9.5 V which may overshoot to +12.0 V for periods up to 20 ns.*
3. *No more than one output may be shorted to ground at a time. Duration of the short circuit should not be greater than one second.*
4. *Stresses above those listed under "Absolute Maximum Ratings" may cause permanent damage to the device. This is a stress rating only; functional operation of the device at these or any other conditions above those indicated in the operational sections of this data sheet is not implied. Exposure of the device to absolute maximum rating conditions for extended periods may affect device reliability.*

Figure 12.1 Maximum Negative Overshoot Waveform

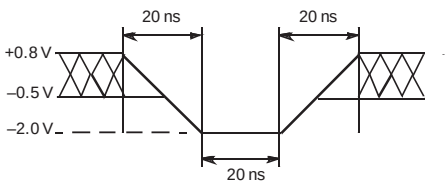

Figure 12.2 Maximum Positive Overshoot Waveform

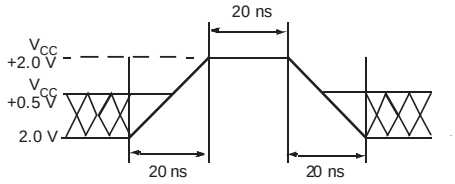

13. Operating Ranges

Industrial (I) Devices
Ambient Temperature (T_A) –40°C to +85°C

V_{CC} Supply Voltages
V_{CC} for standard voltage range 2.7 V to 3.6 V

Operating ranges define those limits between which the functionality of the device is guaranteed.

14. DC Characteristics

14.1 CMOS Compatible

Parameter Symbol	Parameter Description	Test Conditions		Min	Typ	Max	Unit
I_{LI}	Input Load Current	$V_{IN} = V_{SS}$ to V_{CC}, $V_{CC} = V_{CC\ max}$				±1.0	µA
I_{LIT}	A9, OE# and RESET# Input Load Current	$V_{CC} = V_{CC\ max}$, OE# = V_{IH}; A9 or OE# or RESET# = 12.5 V				35	µA
I_{LO}	Output Leakage Current	$V_{OUT} = V_{SS}$ to V_{CC}, $V_{CC} = V_{CC\ max}$, OE# = V_{IH}				±1.0	µA
I_{LR}	Reset Leakage Current	$V_{CC} = V_{CC\ max}$; RESET# = 12.5 V				35	µA
I_{CC1}	V_{CC} Active Read Current (Notes 1, 2)	CE# = V_{IL}, OE# = V_{IH}, Byte Mode	5 MHz		10	16	mA
			1 MHz		2	4	
		CE# = V_{IL}, OE# = V_{IH}, Word Mode	5 MHz		10	16	
			1 MHz		2	4	
I_{CC2}	V_{CC} Active Write Current (Notes 2, 3)	CE# = V_{IL}, OE# = V_{IH}, WE# = V_{IL}			15	30	mA
I_{CC3}	V_{CC} Standby Current (Note 2)	CE#, RESET# = V_{CC} ± 0.3 V			0.2	5	µA
I_{CC4}	V_{CC} Reset Current (Note 2)	RESET# = V_{SS} ± 0.3 V			0.2	5	µA
I_{CC5}	Automatic Sleep Mode (Notes 2, 4)	$V_{IH} = V_{CC}$ ± 0.3 V; $V_{IL} = V_{SS}$ ± 0.3 V			0.2	5	µA
I_{CC6}	V_{CC} Active Read-While-Program Current (Notes 1, 2)	CE# = V_{IL}, OE# = V_{IH}	Byte		21	45	mA
			Word		21	45	
I_{CC7}	V_{CC} Active Read-While-Erase Current (Notes 1, 2)	CE# = V_{IL}, OE# = V_{IH}	Byte		21	45	mA
			Word		21	45	
I_{CC8}	V_{CC} Active Program-While-Erase-Suspended Current (Notes 2, 5)	CE# = V_{IL}, OE# = V_{IH}			17	35	mA
V_{IL}	Input Low Voltage			–0.5		0.8	V
V_{IH}	Input High Voltage			0.7 x V_{CC}		V_{CC} + 0.3	V
V_{HH}	Voltage for WP#/ACC Sector Protect/Unprotect and Program Acceleration	V_{CC} = 3.0 V ± 10%		8.5		9.5	V

Not Recommended for New Design

Parameter Symbol	Parameter Description	Test Conditions	Min	Typ	Max	Unit
V_{ID}	Voltage for Autoselect and Temporary Sector Unprotect	V_{CC} = 3.0 V ± 10%	11.5		12.5	V
V_{OL}	Output Low Voltage	I_{OL} = 2.0 mA, V_{CC} = $V_{CC\ min}$			0.45	V
V_{OH1}	Output High Voltage	I_{OH} = –2.0 mA, V_{CC} = $V_{CC\ min}$	0.85 V_{CC}			V
V_{OH2}		I_{OH} = –100 µA, V_{CC} = $V_{CC\ min}$	V_{CC}–0.4			
V_{LKO}	Low V_{CC} Lock-Out Voltage (Note 5)		1.8	2.0	2.3	V

Notes

1. *The I_{CC} current listed is typically less than 2 mA/MHz, with OE# at V_{IH}.*
2. *Maximum I_{CC} specifications are tested with V_{CC} = V_{CC}max.*
3. *I_{CC} active while Embedded Erase or Embedded Program is in progress.*
4. *Automatic sleep mode enables the low power mode when addresses remain stable for t_{ACC} + 30 ns. Typical sleep mode current is 200 nA.*
5. *Not 100% tested.*

14.2 Zero-Power Flash

Figure 14.1 I_{CC1} Current vs. Time (Showing Active and Automatic Sleep Currents)

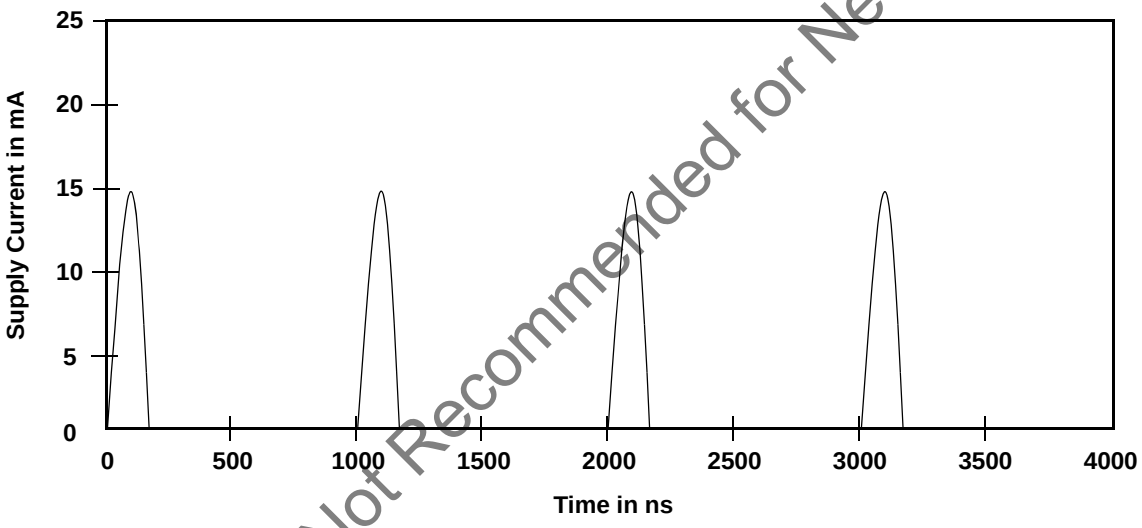

Not Recommended for New Design

Note

Addresses are switching at 1 MHz

Figure 14.2 Typical I_{CC1} vs. Frequency

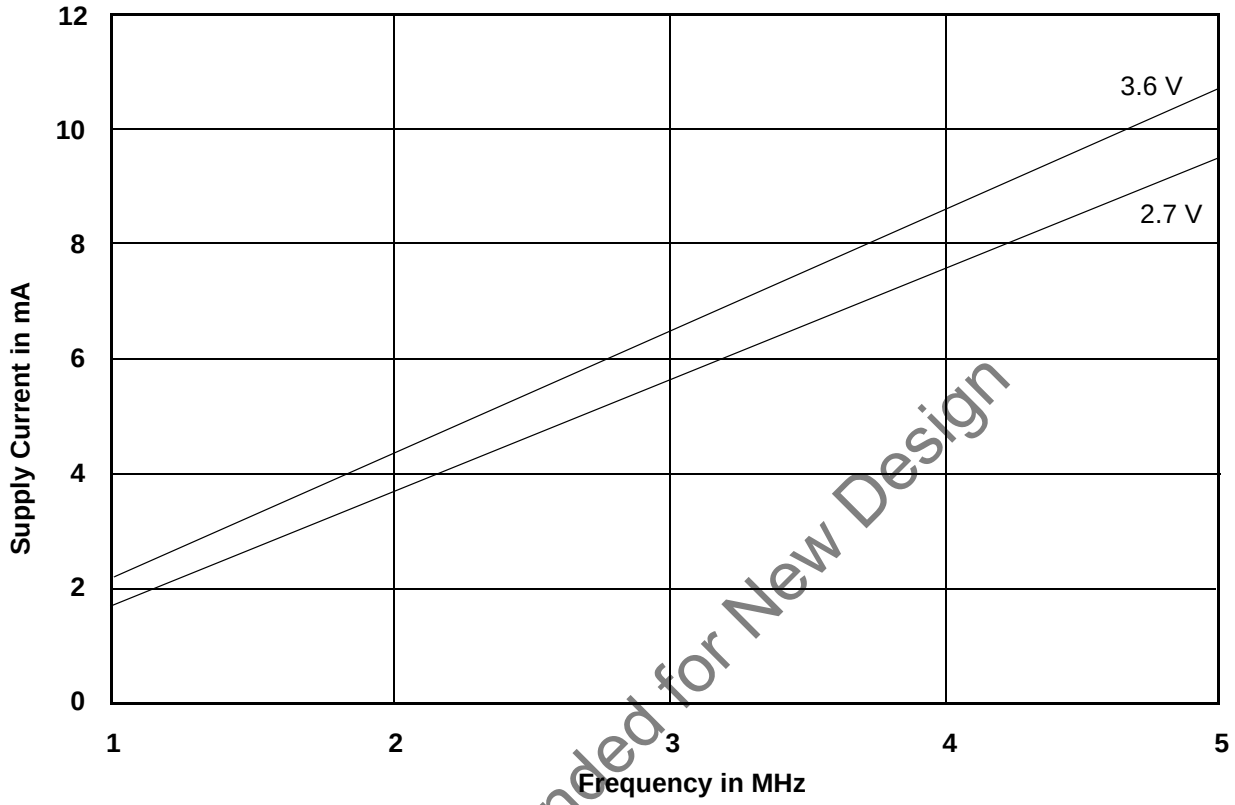

Note
T = 25 °C

Not Recommended for New Design

15. Test Conditions

Figure 15.1 Test Setup

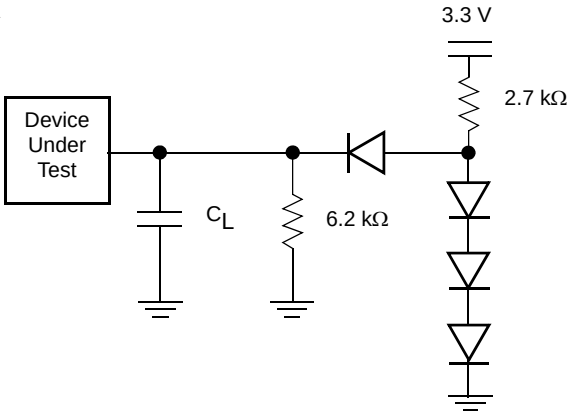

Note
Diodes are IN3064 or equivalent

Test Specifications

Test Condition	55, 60	70, 90	Unit
Output Load	1 TTL gate		
Output Load Capacitance, C_L (including jig capacitance)	30	100	pF
Input Rise and Fall Times	5		ns
Input Pulse Levels	0.0–3.0		V
Input timing measurement reference levels	1.5		V
Output timing measurement reference levels	1.5		V

16. Key To Switching Waveforms

Waveform	Inputs	Outputs
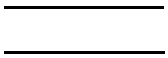	Steady	
	Changing from H to L	
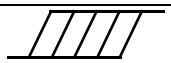	Changing from L to H	
	Don't Care, Any Change Permitted	Changing, State Unknown
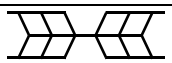	Does Not Apply	Center Line is High Impedance State (High Z)

Figure 16.1 Input Waveforms and Measurement Levels

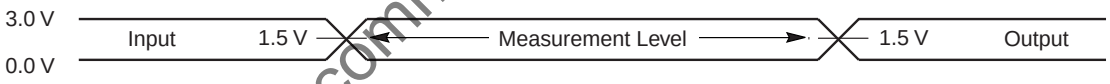

Not Recommended for New Design

17. AC Characteristics

17.1 Read-Only Operations

Parameter		Description		Test Setup		Speed Options				Unit
JEDEC	Std.					55	60	70	90	
t_{AVAV}	t_{RC}	Read Cycle Time (Note 1)			Min	55	60	70	90	ns
t_{AVQV}	t_{ACC}	Address to Output Delay		CE#, OE# = V_{IL}	Max	55	60	70	90	ns
t_{ELQV}	t_{CE}	Chip Enable to Output Delay		OE# = V_{IL}	Max	55	60	70	90	ns
t_{GLQV}	t_{OE}	Output Enable to Output Delay			Max	25		30	35	ns
t_{EHQZ}	t_{DF}	Chip Enable to Output High Z (Notes 1, 3)			Max	16				ns
t_{GHQZ}	t_{DF}	Output Enable to Output High Z (Notes 1, 3)			Max	16				ns
t_{AXQX}	t_{OH}	Output Hold Time From Addresses, CE# or OE#, Whichever Occurs First			Min	0				ns
	t_{OEH}	Output Enable Hold Time (Note 1)	Read		Min	0				ns
			Toggle and Data# Polling		Min	5		10		ns

Notes

1. *Not 100% tested.*
2. *See Figure 15.1 on page 39 and Table on page 40 for test specifications*
3. *Measurements performed by placing a 50 ohm termination on the data pin with a bias of $V_{CC}/2$. The time from OE# high to the data bus driven to $V_{CC}/2$ is taken as t_{DF}*

Not Recommended for New Design

Figure 17.1 Read Operation Timings

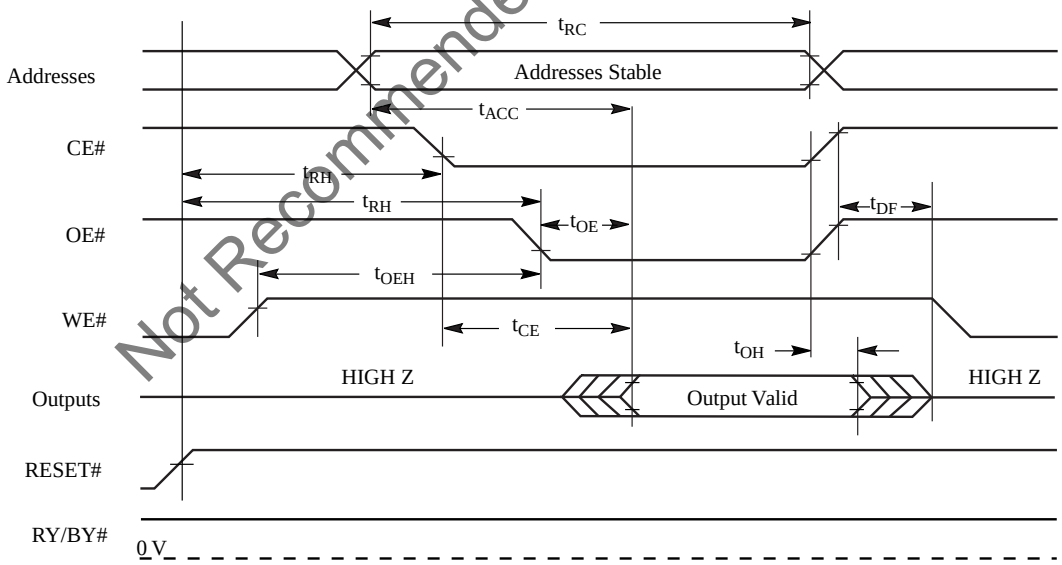

17.2 Hardware Reset (RESET#)

Parameter		Description		All Speed Options	Unit
JEDEC	Std				
	t_{Ready}	RESET# Pin Low (During Embedded Algorithms) to Read Mode (See Note)	Max	20	µs
	t_{Ready}	RESET# Pin Low (NOT During Embedded Algorithms) to Read Mode (See Note)	Max	500	ns
	t_{RP}	RESET# Pulse Width	Min	500	ns
	t_{RH}	Reset High Time Before Read (See Note)	Min	50	ns
	t_{RPD}	RESET# Low to Standby Mode	Min	20	µs
	t_{RB}	RY/BY# Recovery Time	Min	0	ns

Note
Not 100% tested.

Not Recommended for New Design

Figure 17.2 Reset Timings

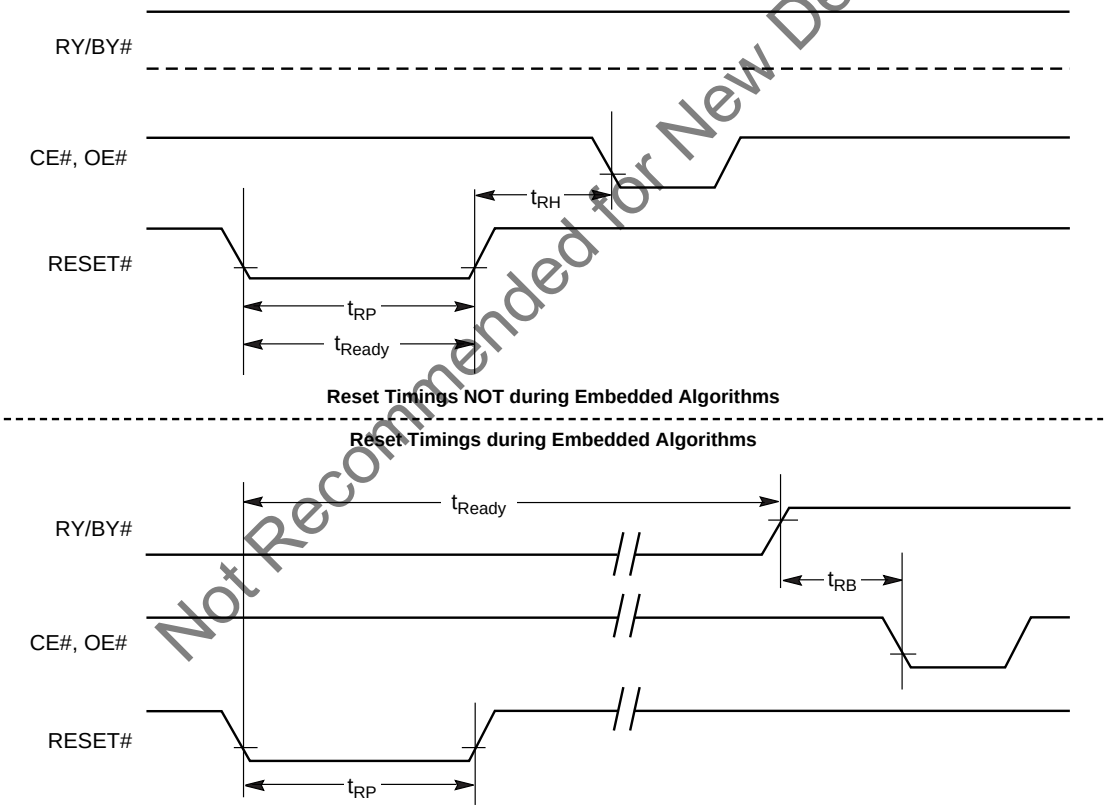

17.3 Word/Byte Configuration (BYTE#)

Parameter		Description		Speed Options				Unit
JEDEC	Std.			55	60	70	90	
	t_{ELFL}/t_{ELFH}	CE# to BYTE# Switching Low or High	Max	5				ns
	t_{FLQZ}	BYTE# Switching Low to Output HIGH Z	Max	16				ns
	t_{FHQV}	BYTE# Switching High to Output Active	Max	55	60	70	90	ns

Figure 17.3 BYTE# Timings for Read Operations

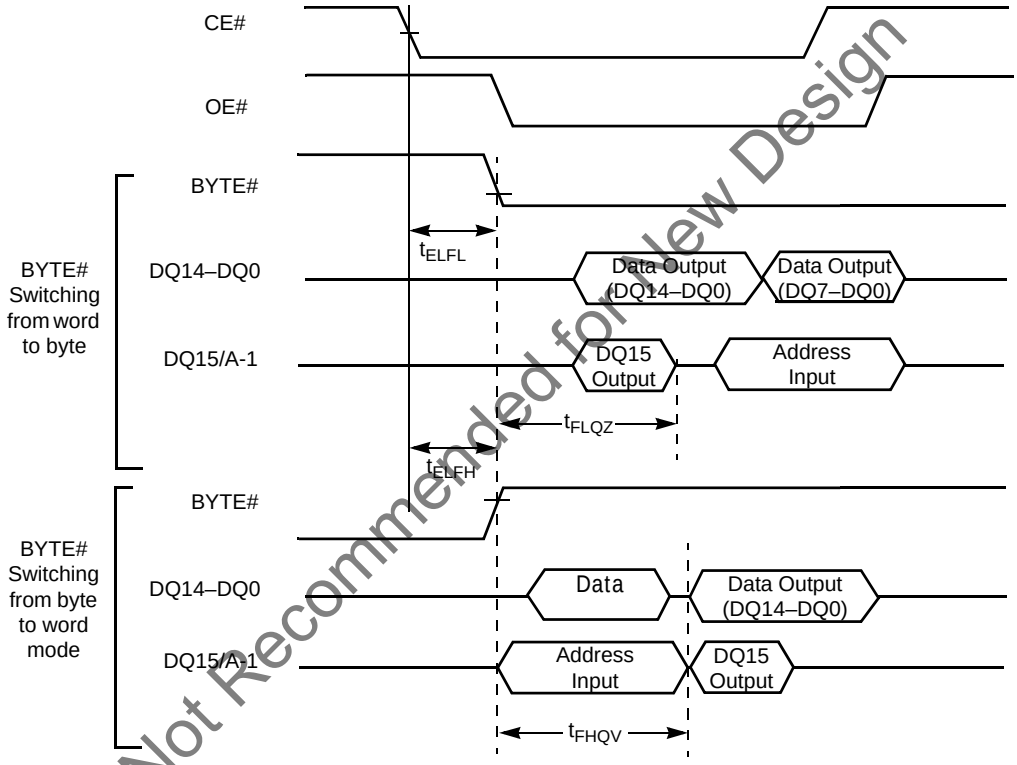

Not Recommended for New Design

Figure 17.4 BYTE# Timings for Write Operations

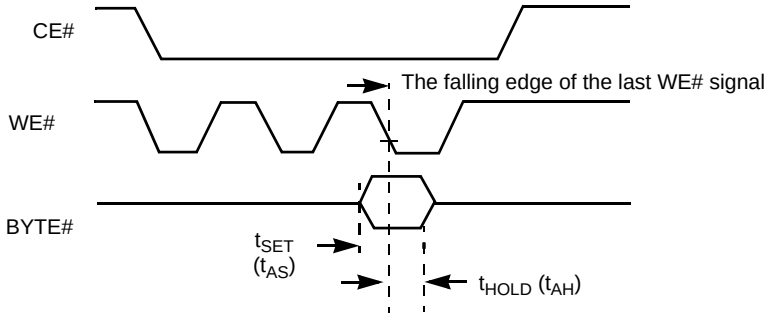

Note
Refer to the Erase/Program Operations table for t_{AS} and t_{AH} specifications.

17.4 Erase and Program Operations

Parameter		Description			Speed Options				Unit
JEDEC	Std				55	60	70	90	
t_{AVAV}	t_{WC}	Write Cycle Time (Note 1)		Min	55	60	70	90	ns
t_{AVWL}	t_{AS}	Address Setup Time		Min	0				ns
	t_{ASO}	Address Setup Time to OE# low during toggle bit polling		Min	15				ns
t_{WLAX}	t_{AH}	Address Hold Time		Min	30	35	40	45	ns
	t_{AHT}	Address Hold Time From CE# or OE# high during toggle bit polling		Min	0				ns
t_{DVWH}	t_{DS}	Data Setup Time		Min	30	35	40	45	ns
t_{WHDX}	t_{DH}	Data Hold Time		Min	0				ns
	t_{OEPH}	Output Enable High during toggle bit polling		Min	20				ns
t_{GHWL}	t_{GHWL}	Read Recovery Time Before Write (OE# High to WE# Low)		Min	0				ns
t_{ELWL}	t_{CS}	CE# Setup Time		Min	0				ns
t_{WHEH}	t_{CH}	CE# Hold Time		Min	0				ns
t_{WLWH}	t_{WP}	Write Pulse Width		Min	25	25	30	35	ns
t_{WHDL}	t_{WPH}	Write Pulse Width High		Min	25	25	30	30	ns
	$t_{SR/W}$	Latency Between Read and Write Operations		Min	0				ns
t_{WHWH1}	t_{WHWH1}	Programming Operation (Note 2)	Byte	Typ	5				µs
			Word	Typ	7				
t_{WHWH1}	t_{WHWH1}	Accelerated Programming Operation, Word or Byte (Note 2)		Typ	4				µs
t_{WHWH2}	t_{WHWH2}	Sector Erase Operation (Note 2)		Typ	0.4				sec
	t_{VCS}	V_{CC} Setup Time (Note 1)		Min	50				µs
	t_{RB}	Write Recovery Time from RY/BY#		Min	0				ns
	t_{BUSY}	Program/Erase Valid to RY/BY# Delay		Max	90				ns

Notes

1. *Not 100% tested.*
2. *See Erase and Programming Performance on page 51 for more information.*

Not Recommended for New Design

Figure 17.5 Program Operation Timings

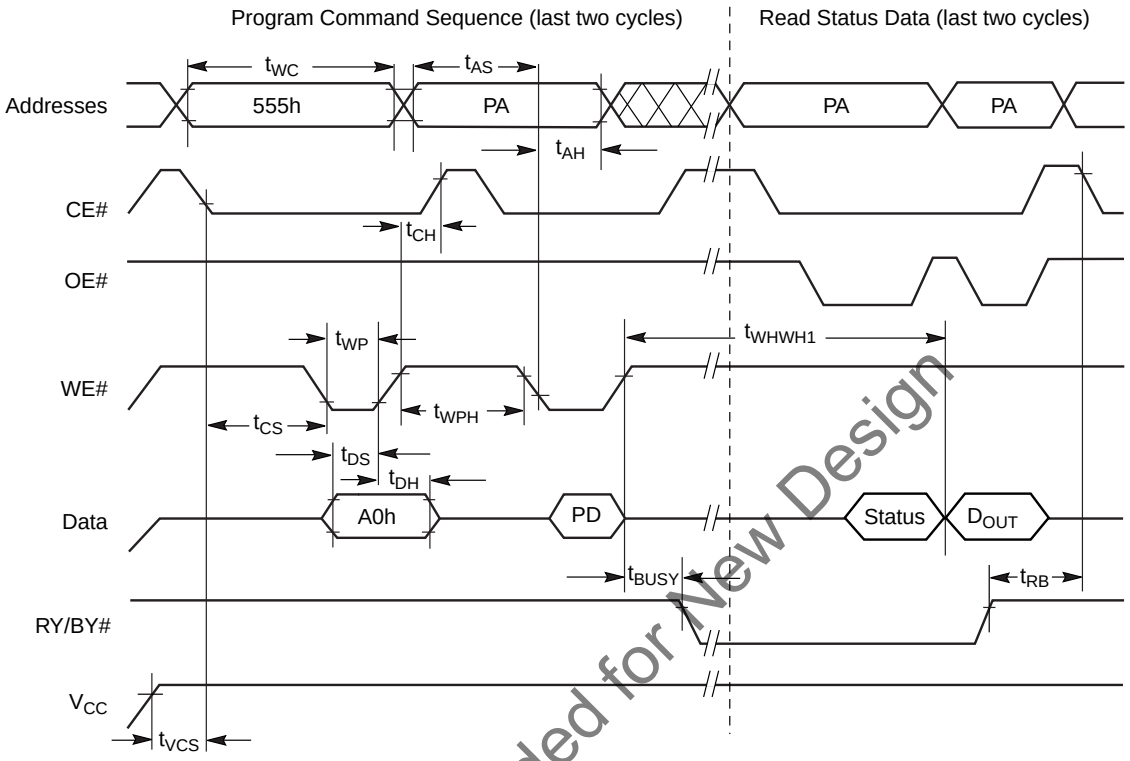

Notes

1. *PA = program address, PD = program data, D_{OUT} is the true data at the program address.*
2. *Illustration shows device in word mode.*

Figure 17.6 Accelerated Program Timing Diagram

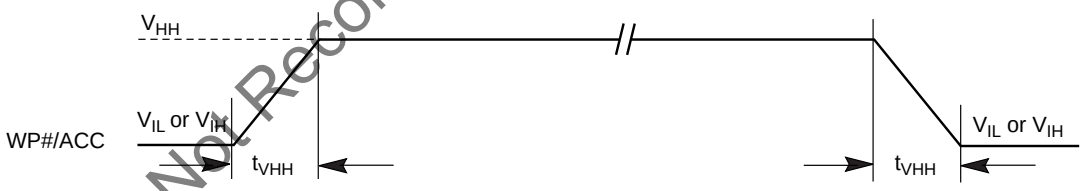

Not Recommended for New Design

Figure 17.7 Chip/Sector Erase Operation Timings

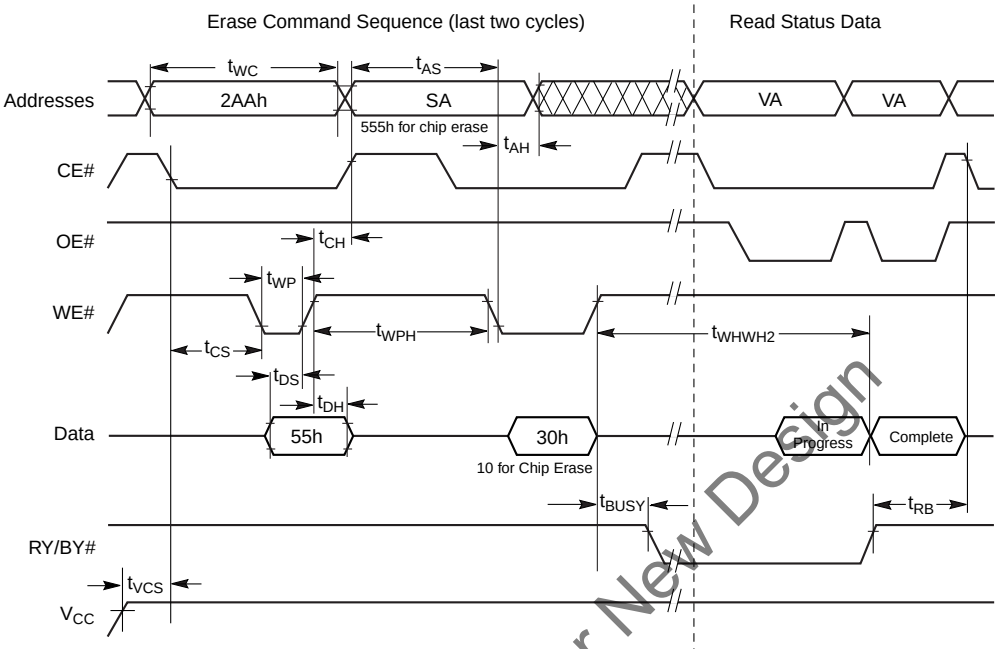

Notes

1. *SA = sector address (for Sector Erase), VA = Valid Address for reading status data (see Write Operation Status on page 31.*
2. *These waveforms are for the word mode.*

Figure 17.8 Back-to-back Read/Write Cycle Timings

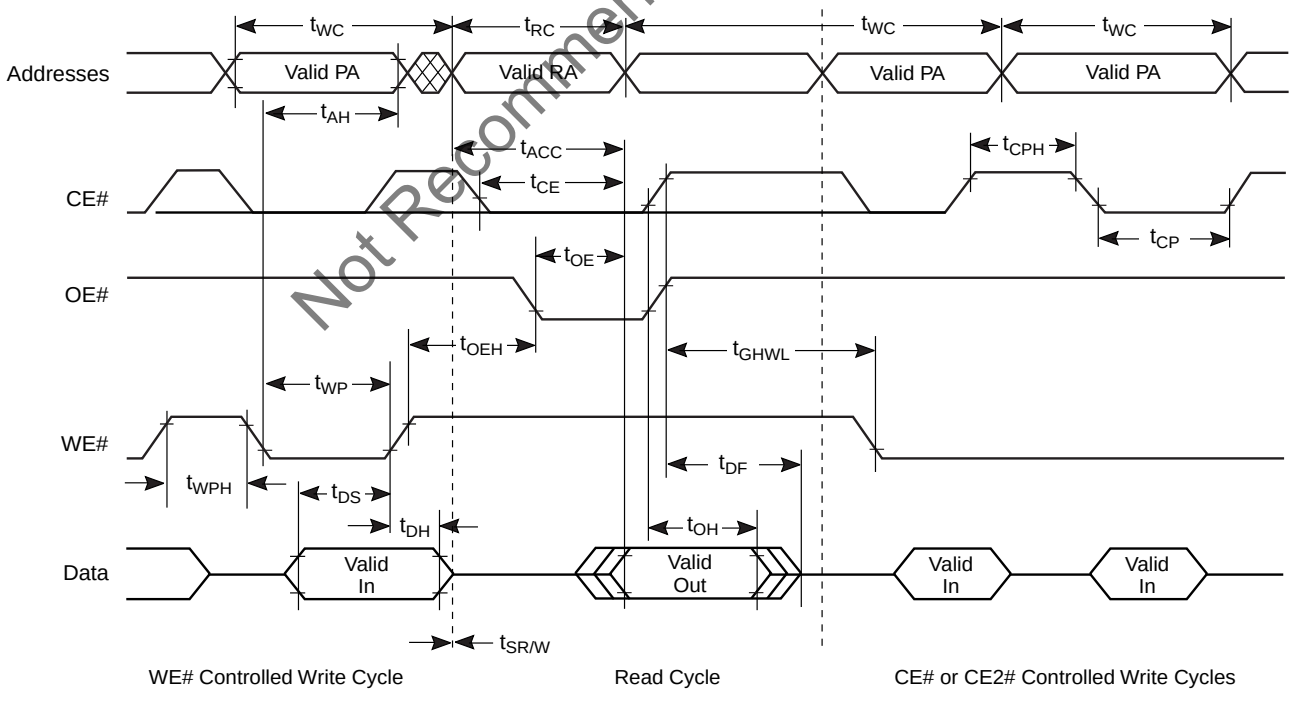

Not Recommended for New Design

Figure 17.9 Data# Polling Timings (During Embedded Algorithms)

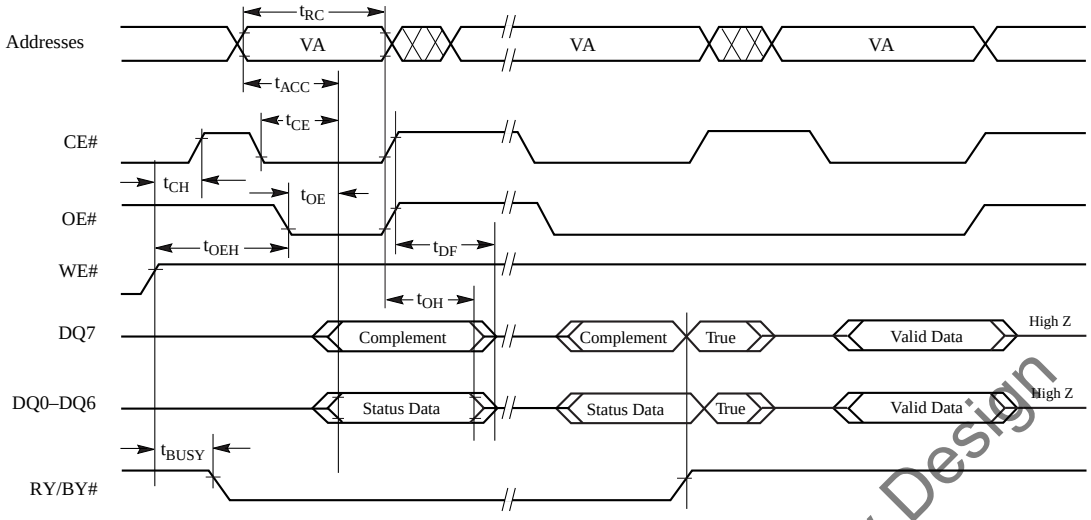

Note
VA = Valid address. Illustration shows first status cycle after command sequence, last status read cycle, and array data read cycle

Figure 17.10 Toggle Bit Timings (During Embedded Algorithms)

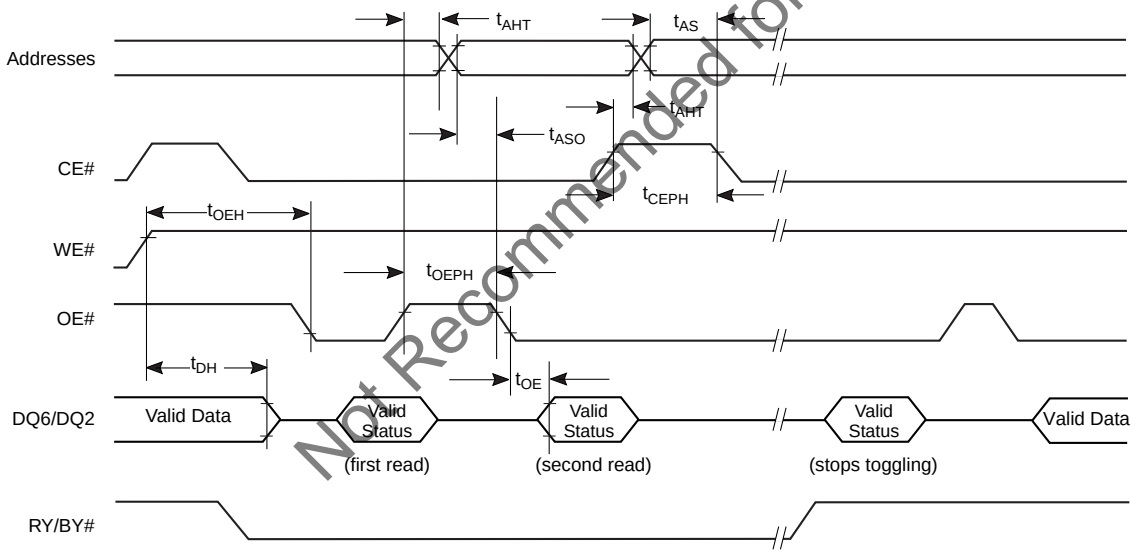

Note
VA = Valid address; not required for DQ6. Illustration shows first two status cycle after command sequence, last status read cycle, and array data read cycle.

Not Recommended for New Design

Figure 17.11 DQ2 vs. DQ6

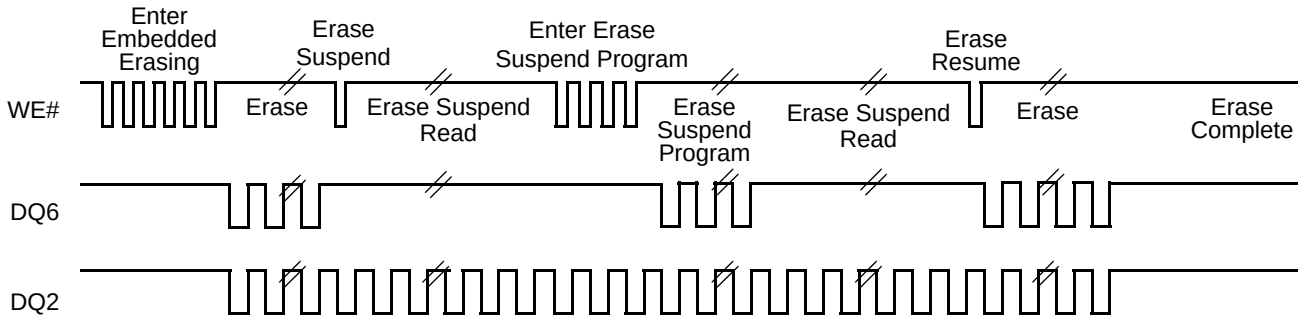

Note
DQ2 toggles only when read at an address within an erase-suspended sector. The system may use OE# or CE# to toggle DQ2 and DQ6.

17.5 Temporary Sector Unprotect

Parameter		Description		All Speed Options	Unit
JEDEC	Std				
	t_{VIDR}	V_{ID} Rise and Fall Time (See Note)	Min	500	ns
	t_{VHH}	V_{HH} Rise and Fall Time (See Note)	Min	250	ns
	t_{RSP}	RESET# Setup Time for Temporary Sector Unprotect	Min	4	µs
	t_{RRB}	RESET# Hold Time from RY/BY# High for Temporary Sector Unprotect	Min	4	µs

Note
Not 100% tested.

Figure 17.12 Temporary Sector Unprotect Timing Diagram

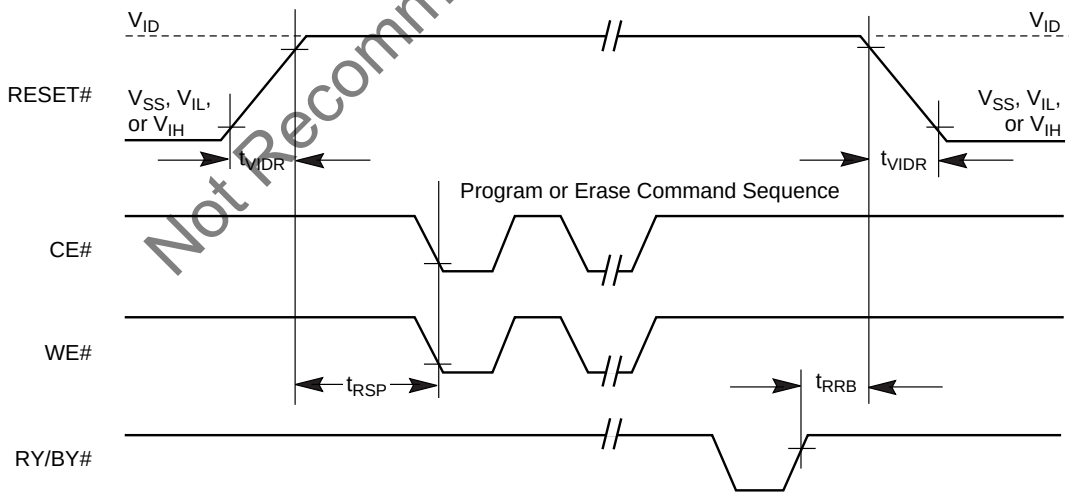

Not Recommended for New Design

Figure 17.13 Sector/Sector Block Protect and Unprotect Timing Diagram

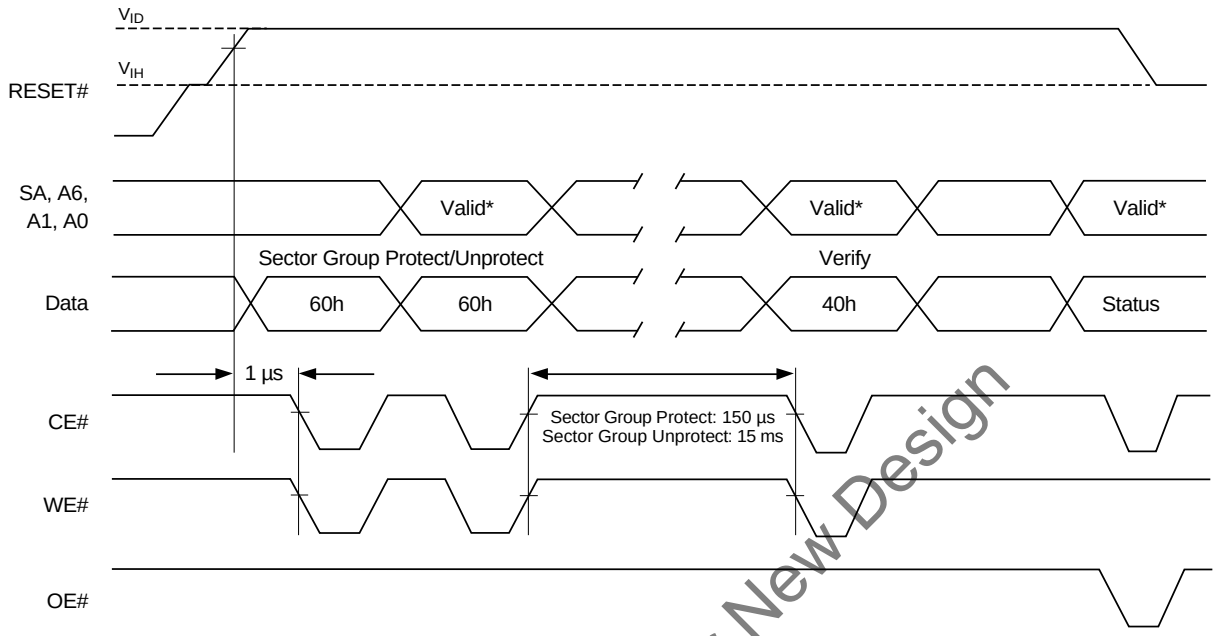

Note

** For sector protect, A6 = 0, A1 = 1, A0 = 0. For sector unprotect, A6 = 1, A1 = 1, A0 = 0.*

Not Recommended for New Design

17.6 Alternate CE# Controlled Erase and Program Operations

Parameter					Speed Options				
JEDEC	Std.	Description			55	60	70	90	Unit
t_{AVAV}	t_{WC}	Write Cycle Time (Note 1)		Min	55	55	70	90	ns
t_{AVWL}	t_{AS}	Address Setup Time		Min	0				ns
t_{ELAX}	t_{AH}	Address Hold Time		Min	30	35	40	45	ns
t_{DVEH}	t_{DS}	Data Setup Time		Min	30	35	40	45	ns
t_{EHDX}	t_{DH}	Data Hold Time		Min	0				ns
t_{GHEL}	t_{GHEL}	Read Recovery Time Before Write (OE# High to WE# Low)		Min	0				ns
t_{WLEL}	t_{WS}	WE# Setup Time		Min	0				ns
t_{EHWH}	t_{WH}	WE# Hold Time		Min	0				ns
t_{ELEH}	t_{CP}	CE# Pulse Width		Min	25	25	40	45	ns
t_{EHEL}	t_{CPH}	CE# Pulse Width High		Min	25	25	30		ns
t_{WHWH1}	t_{WHWH1}	Programming Operation (Note 2)	Byte	Typ	5				µs
			Word	Typ	7				
t_{WHWH1}	t_{WHWH1}	Accelerated Programming Operation, Word or Byte (Note 2)		Typ	4				µs
t_{WHWH2}	t_{WHWH2}	Sector Erase Operation (Note 2)		Typ	0.4				sec

Note

1. *Not 100% tested.*
2. *See Erase and Programming Performance on page 51 for more information.*

Figure 17.14 Alternate CE# Controlled Write (Erase/Program) Operation Timings

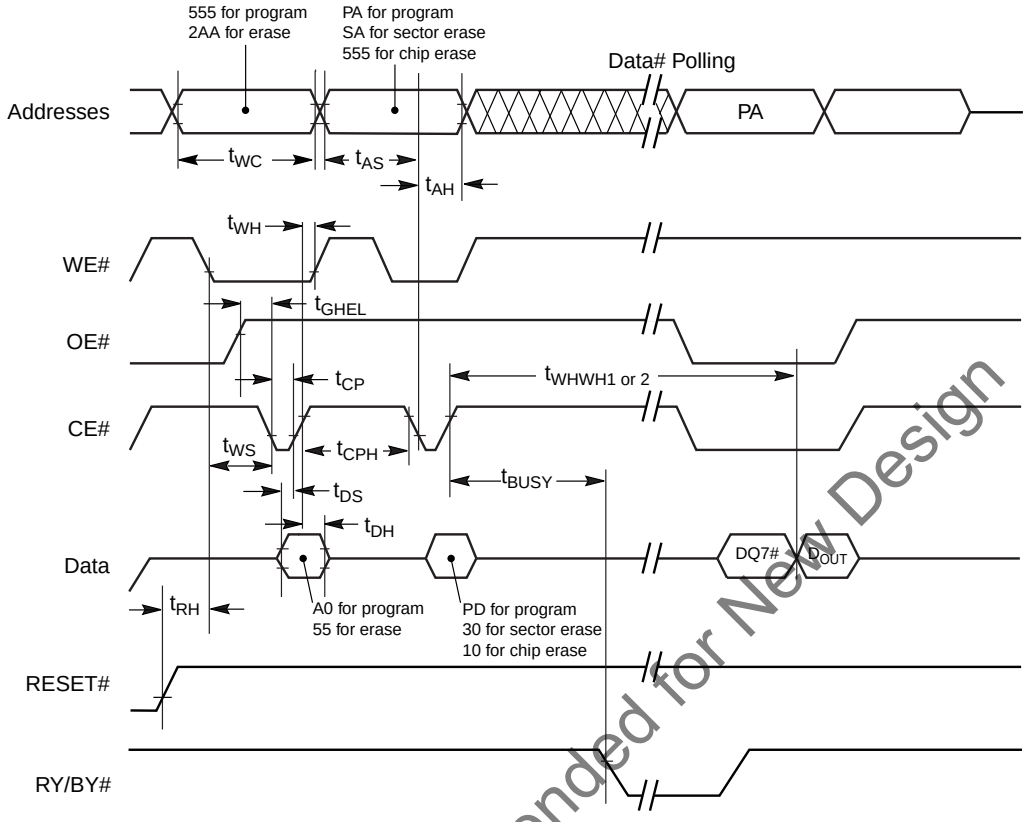

Notes

1. *Figure indicates last two bus cycles of a program or erase operation.*
2. *PA = program address, SA = sector address, PD = program data.*
3. *DQ7# is the complement of the data written to the device. D_{OUT} is the data written to the device.*
4. *Waveforms are for the word mode.*

Not Recommended for New Design

18. Erase and Programming Performance

Parameter		Typ (Note 1)	Max (Note 2)	Unit	Comments
Sector Erase Time		0.4	5	sec	Excludes 00h programming prior to erasure (Note 4)
Chip Erase Time		56		sec	
Byte Program Time		5	150	µs	Excludes system level overhead (Note 5)
Word Program Time		7	210	µs	
Accelerated Byte/Word Program Time		4	120	µs	
Chip Program Time (Note 3)	Byte Mode	42	126	sec	
	Word Mode	28	84		
Accelerated Chip Programming Time		10	30	sec	

Notes

1. *Typical program and erase times assume the following conditions: 25°C, 3.0 V V_{CC}, 100,000 cycles; checkerboard data pattern.*
2. *Under worst case conditions of 90°C, V_{CC} = 2.7 V, 1,000,000 cycles.*
3. *The typical chip programming time is considerably less than the maximum chip programming time listed, since most bytes program faster than the maximum program times listed.*
4. *In the pre-programming step of the Embedded Erase algorithm, all bytes are programmed to 00h before erasure.*
5. *System-level overhead is the time required to execute the two- or four-bus-cycle sequence for the program command. See Table on page 30 for further information on command definitions.*
6. *The device has a minimum cycling endurance of 100,000 cycles per sector.*

Not Recommended for New Design

19. TSOP & BGA Pin Capacitance

Parameter Symbol	Parameter Description	Test Setup		Typ	Max	Unit
C_{IN}	Input Capacitance	V_{IN} = 0	TSOP	6	7.5	pF
			Fine-pitch BGA	4.2	5.0	pF
C_{OUT}	Output Capacitance	V_{OUT} = 0	TSOP	8.5	12	pF
			Fine-pitch BGA	5.4	6.5	pF
C_{IN2}	Control Pin Capacitance	V_{IN} = 0	TSOP	7.5	9	pF
			Fine-pitch BGA	3.9	4.7	pF

Notes

1. *Sampled, not 100% tested.*
2. *Test conditions T_A = 25°C, f = 1.0 MHz.*

20. Physical Dimensions

20.1 FBE063—63-Ball Fine-Pitch Ball Grid Array (BGA) 12 x 11 mm package

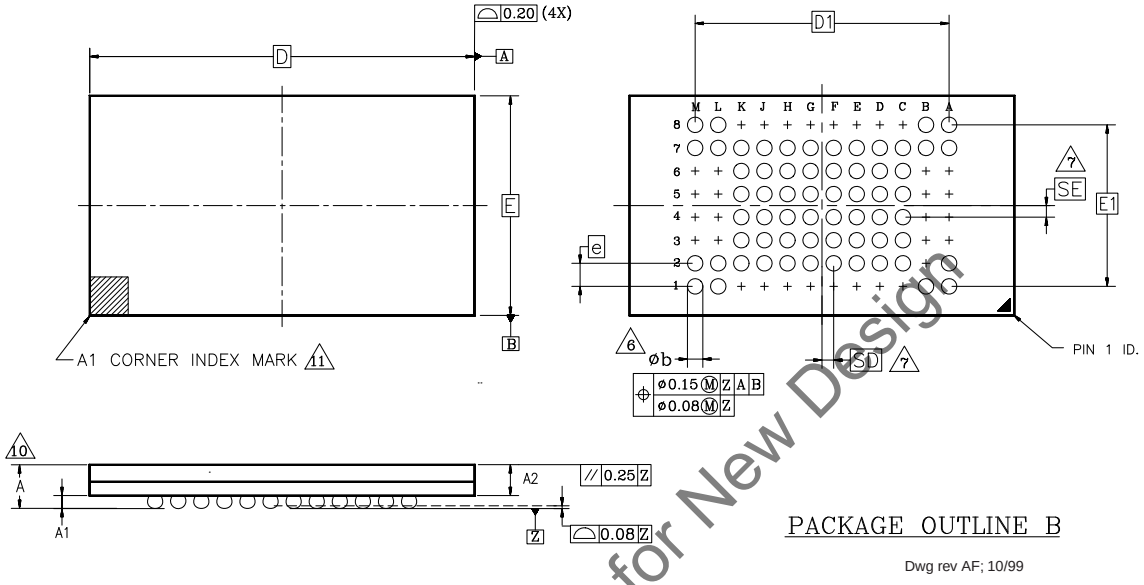

PACKAGE OUTLINE B

Dwg rev AF; 10/99

PACKAGE	xFBE 063			
JEDEC	N/A			
	12.00mmx11.00mm PACKAGE			
SYMBOL	MIN	NOM	MAX	NOTE
A	–	–	1.20	OVERALL THICKNESS
A1	0.20	–	–	BALL HEIGHT
A2	0.84	–	0.94	BODY THICKNESS
D	12.00 BSC			BODY SIZE
E	11.00 BSC			BODY SIZE
D1	8.80 BSC			BALL FOOTPRINT
E1	5.60 BSC			BALL FOOTPRINT
MD	12			ROW MATRIX SIZE D DIRECTION
ME	8			ROW MATRIX SIZE E DIRECTION
N	63			TOTAL BALL COUNT
b	0.30	0.35	0.40	BALL DIAMETER
e	0.80 BSC			BALL PITCH
SD / SE	0.40 BSC			SOLDER BALL PLACEMENT
	A3–A6,B2–B6 L3–L6, M3–M6 C1–K1,C8–K8			DEPOPULATED SOLDER BALLS

NOTES:

1. DIMENSIONING AND TOLERANCING PER ASME Y14.5M–1994.
2. ALL DIMENSIONS ARE IN MILLIMETERS.
3. BALL POSITION DESIGNATION PER JESD 95–1, SPP–010.
4. e REPRESENTS THE SOLDER BALL GRID PITCH.
5. SYMBOL "MD" IS THE BALL ROW MATRIX SIZE IN THE "D" DIRECTION. SYMBOL "ME" IS THE BALL COLUMN MATRIX SIZE IN THE "E" DIRECTION. N IS THE MAXIMUM NUMBER OF SOLDER BALLS FOR MATRIX SIZE MD x ME.
6. DIMENSION "b" IS MEASURED AT THE MAXIMUM BALL DIAMETER IN A PLANE PARALLEL TO DATUM Z.
7. SD AND SE ARE MEASURED WITH RESPECT TO DATUMS A AND B AND DEFINE THE POSITION OF THE CENTER SOLDER BALL IN THE OUTER ROW. WHEN THERE IS AN ODD NUMBER OF SOLDER BALLS IN THE OUTER ROW PARALLEL TO THE D OR E DIMENSION, RESPECTIVELY, SD OR SE = 0.000 WHEN THERE IS AN EVEN NUMBER OF SOLDER BALLS IN THE OUTER ROW, SD OR SE = e/2
8. "X" IN THE PACKAGE VARIATIONS DENOTES PART IS UNDER QUALIFICATION.
9. "+" IN THE PACKAGE DRAWING INDICATE THE THEORETICAL CENTER OF DEPOPULATED BALLS.
10. FOR PACKAGE THICKNESS A IS THE CONTROLING DIMENSION.
11. A1 CORNER TO BE IDENTIFIED BY CHAMFER, INK MARK, METALLIZED MARKINGS INDENTION OR OTHER MEANS.

Not Recommended for New Design

20.2 TS 048—48-Pin Standard TSOP

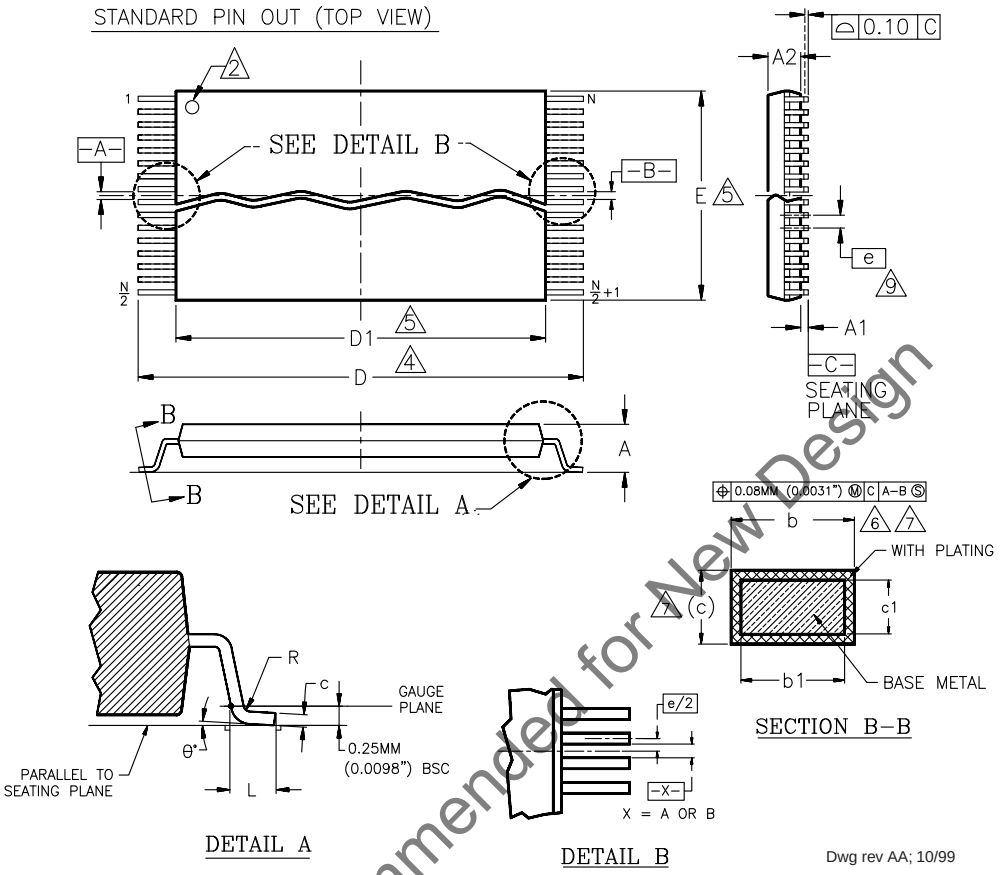

Package	TS 48		
Jedec	MO-142 (B) DD		
Symbol	MIN	NOM	MAX
A	—	—	1.20
A1	0.05	—	0.15
A2	0.95	1.00	1.05
b1	0.17	0.20	0.23
b	0.17	0.22	0.27
c1	0.10	—	0.16
c	0.10	—	0.21
D	19.80	20.00	20.20
D1	18.30	18.40	18.50
E	11.90	12.00	12.10
e	0.50 BASIC		
L	0.50	0.60	0.70
θ	0°	3°	5°
R	0.08	—	0.20
N	48		

NOTES:

1. CONTROLLING DIMENSIONS ARE IN MILLIMETERS (mm). (DIMENSIONING AND TOLERANCING CONFORMS TO ANSI Y14.5M-1982)
2. PIN 1 IDENTIFIER FOR STANDARD PIN OUT (DIE UP).
3. PIN 1 IDENTIFIER FOR REVERSE PIN OUT (DIE DOWN): INK OR LASER MARK.
4. TO BE DETERMINED AT THE SEATING PLANE -C-. THE SEATING PLANE IS DEFINED AS THE PLANE OF CONTACT THAT IS MADE WHEN THE PACKAGE LEADS ARE ALLOWED TO REST FREELY ON A FLAT HORIZONTAL SURFACE.
5. DIMENSIONS D1 AND E DO NOT INCLUDE MOLD PROTRUSION. ALLOWABLE MOLD PROTUSION IS 0.15mm (.0059") PER SIDE.
6. DIMENSION b DOES NOT INCLUDE DAMBAR PROTUSION. ALLOWABLE DAMBAR PROTUSION SHALL BE 0.08mm (0.0031") TOTAL IN EXCESS OF b DIMENSION AT MAX. MATERIAL CONDITION. MINIMUM SPACE BETWEEN PROTRUSION AND AN ADJACENT LEAD TO BE 0.07mm (0.0028").
7. THESE DIMENSIONS APPLY TO THE FLAT SECTION OF THE LEAD BETWEEN 0.10mm (.0039") AND 0.25mm (0.0098") FROM THE LEAD TIP.
8. LEAD COPLANARITY SHALL BE WITHIN 0.10mm (0.004") AS MEASURED FROM THE SEATING PLANE.
9. DIMENSION "e" IS MEASURED AT THE CENTERLINE OF THE LEADS.

Not Recommended for New Design

21. Document History Page

Document Title:S29JL064H 64 Mbit (8 M x 8-Bit/4 M x 16-Bit), 3 V, Simultaneous Read/Write Flash Document Number: 002-01184				
Rev.	**ECN No.**	**Orig. of Change**	**Submission Date**	**Description of Change**
**	-	RYSU	01/22/2004	A:Initial release (**Spansion Publication Number:** S29JL064H_00)
			03/26/2004	A1:Removed Latchup Characteristics section.
			04/28/2004	A2:Updated data sheet status from Preliminary to Data sheet
			09/16/2004	A3:In-System Sector Protect/Unprotect Algorithms Corrected wait time in fourth step of flowchart. **Autoselect Codes** Corrected Secured Silicon Indicator Bit data on DQ7 to DQ0. **Command Definitions** Corrected Secured Silicon Sector Factory Protect data in fourth bus cycle.
			06/28/2005	A4:Added statement regarding new FBGA designs to first page. Updated Trademark. **Ordering Information** Added new FBGA design statement. Reformatted Valid Combinations Table. **Sector / Sector Block Protection and Unprotection** Reformatted Table 6 to fit on one page. **Operating Ranges** Removed Extended operating range. **DC Characteristics** Reformatted CMOS Compatible table columns. **AC Characteristics** Reformatted Erase and Program Operations table columns.
			06/06/2007	A5:Removed the 7 inch Tape and Reel Packing Type.
**	-	RYSU	08/10/2007	**A6:DC Characteristics** Changed V_{LKO} minimum, typical, and maximum values.
			09/19/2007	**A7:S29JL064H Autoselect Codes, (High Voltage Method) Table** Deleted code for 'customer locked' under column "DQ7 to DQ0"
			09/08/2009	**A8:In-System Sector Protect/Unprotect Algorithms** Updated Figure **Secured Silicon Sector Flash Memory Region** Modified section **Word/Byte Configuration (BYTE#)** Changed tFHQV condition from Min. to Max
*A	5038958	RYSU	12/07/2015	Updated to Cypress template
*B	5074510	RYSU	01/08/2016	Added a note in blue font in page 1 showing the suggested replacement parts. Removed the Spansion Revision History

Not Recommended for New Design

Sales, Solutions, and Legal Information

Worldwide Sales and Design Support

Cypress maintains a worldwide network of offices, solution centers, manufacturer's representatives, and distributors. To find the office closest to you, visit us at Cypress Locations.

Products

Automotive.....cypress.com/go/automotive
Clocks & Buffers ..... cypress.com/go/clocks
Interface..... cypress.com/go/interface
Lighting & Power Control.....cypress.com/go/powerpsoc
Memory..... cypress.com/go/memory
PSoC .....cypress.com/go/psoc
Touch Sensing ..... cypress.com/go/touch
USB Controllers.....cypress.com/go/USB
Wireless/RF ..... cypress.com/go/wireless

PSoC® Solutions

psoc.cypress.com/solutions

PSoC 1 | PSoC 3 | PSoC 4 | PSoC 5LP

Cypress Developer Community

Community | Forums | Blogs | Video | Training

Technical Support

cypress.com/go/support

Not Recommended for New Design

© Cypress Semiconductor Corporation, 2004-2016. The information contained herein is subject to change without notice. Cypress Semiconductor Corporation assumes no responsibility for the use of any circuitry other than circuitry embodied in a Cypress product. Nor does it convey or imply any license under patent or other rights. Cypress products are not warranted nor intended to be used for medical, life support, life saving, critical control or safety applications, unless pursuant to an express written agreement with Cypress. Furthermore, Cypress does not authorize its products for use as critical components in life-support systems where a malfunction or failure may reasonably be expected to result in significant injury to the user. The inclusion of Cypress products in life-support systems application implies that the manufacturer assumes all risk of such use and in doing so indemnifies Cypress against all charges.

Any Source Code (software and/or firmware) is owned by Cypress Semiconductor Corporation (Cypress) and is protected by and subject to worldwide patent protection (United States and foreign), United States copyright laws and international treaty provisions. Cypress hereby grants to licensee a personal, non-exclusive, non-transferable license to copy, use, modify, create derivative works of, and compile the Cypress Source Code and derivative works for the sole purpose of creating custom software and or firmware in support of licensee product to be used only in conjunction with a Cypress integrated circuit as specified in the applicable agreement. Any reproduction, modification, translation, compilation, or representation of this Source Code except as specified above is prohibited without the express written permission of Cypress.

Disclaimer: CYPRESS MAKES NO WARRANTY OF ANY KIND, EXPRESS OR IMPLIED, WITH REGARD TO THIS MATERIAL, INCLUDING, BUT NOT LIMITED TO, THE IMPLIED WARRANTIES OF MERCHANTABILITY AND FITNESS FOR A PARTICULAR PURPOSE. Cypress reserves the right to make changes without further notice to the materials described herein. Cypress does not assume any liability arising out of the application or use of any product or circuit described herein. Cypress does not authorize its products for use as critical components in life-support systems where a malfunction or failure may reasonably be expected to result in significant injury to the user. The inclusion of Cypress' product in a life-support systems application implies that the manufacturer assumes all risk of such use and in doing so indemnifies Cypress against all charges.

Use may be limited by and subject to the applicable Cypress software license agreement.

Cypress®, Spansion®, MirrorBit®, MirrorBit® Eclipse™, ORNAND™, EcoRAM™, HyperBus™, HyperFlash™, and combinations thereof, are trademarks and registered trademarks of Cypress Semiconductor Corp. All products and company names mentioned in this document may be the trademarks of their respective holders.