Please note that Cypress is an Infineon Technologies Company.
The document following this cover page is marked as “Cypress” document as this is the company that originally developed the product. Please note that Infineon will continue to offer the product to new and existing customers as part of the Infineon product portfolio.

Continuity of document content
The fact that Infineon offers the following product as part of the Infineon product portfolio does not lead to any changes to this document. Future revisions will occur when appropriate, and any changes will be set out on the document history page.

Continuity of ordering part numbers
Infineon continues to support existing part numbers. Please continue to use the ordering part numbers listed in the datasheet for ordering.



THIS SPEC IS OBSOLETE

Spec No: 001-29179

Spec Title: MOBL(R) CLOCK M4000/M8000, FOUR-PLL PROGRAMMABLE CLOCK GENERATOR FOR PORTABLE APPLICATIONS

Replaced by: None

MoBL® Clock
M4000/M8000

Four-PLL Programmable Clock Generator for Portable Applications

OBSOLETE

Features

- Device Operating Voltage Options:
  - MoBL Clock M4000 Family: 1.8 V
  - MoBL Clock M8000 Family: 2.5 V, 3.0 V, or 3.3 V
- Selectable clock output voltages for both MoBL Clock M4000 and M8000:
  - 1.5 V, 1.8 V, 2.5 V, 3.0 V, or 3.3 V
- Fully integrated ultra low power phase-locked loops (PLLs)
- Input reference clock frequency range:
  - External crystal: 8 to 48 MHz
  - External reference: 1 to 48 MHz clock
- Output clock frequency range: 3–50 MHz
- Up to eight I²C™ programmable output clocks
- Programmable output drive strengths
- 150 ps typical cycle-to-cycle jitter
- Optional Spread Spectrum for EMI reduction
- 24-pin (4 × 4 × 1 mm) QFN Package
- Industrial temperature range

Benefits

- Suitable for cell phone, portable, and consumer electronics applications
- Replaces multiple crystals or crystal oscillators enabling board space saving
- Multiple high-performance PLLs allow synthesis of unrelated frequencies
- Capable of Zero PPM frequency synthesis error
- Application compatibility in multiple output voltage levels
- Optional Spread Spectrum capable PLLs with Lexmark or Linear profile for maximum EMI reduction
- Programmable PLLs for system frequency margin tests
- Meets critical timing requirements in complex system designs
- Individually enable or disable each output using I²C
- Ease of output clock selection using programmable crossbar switches

Functional Description

For a complete list of related documentation, click here.

Logic Block Diagram

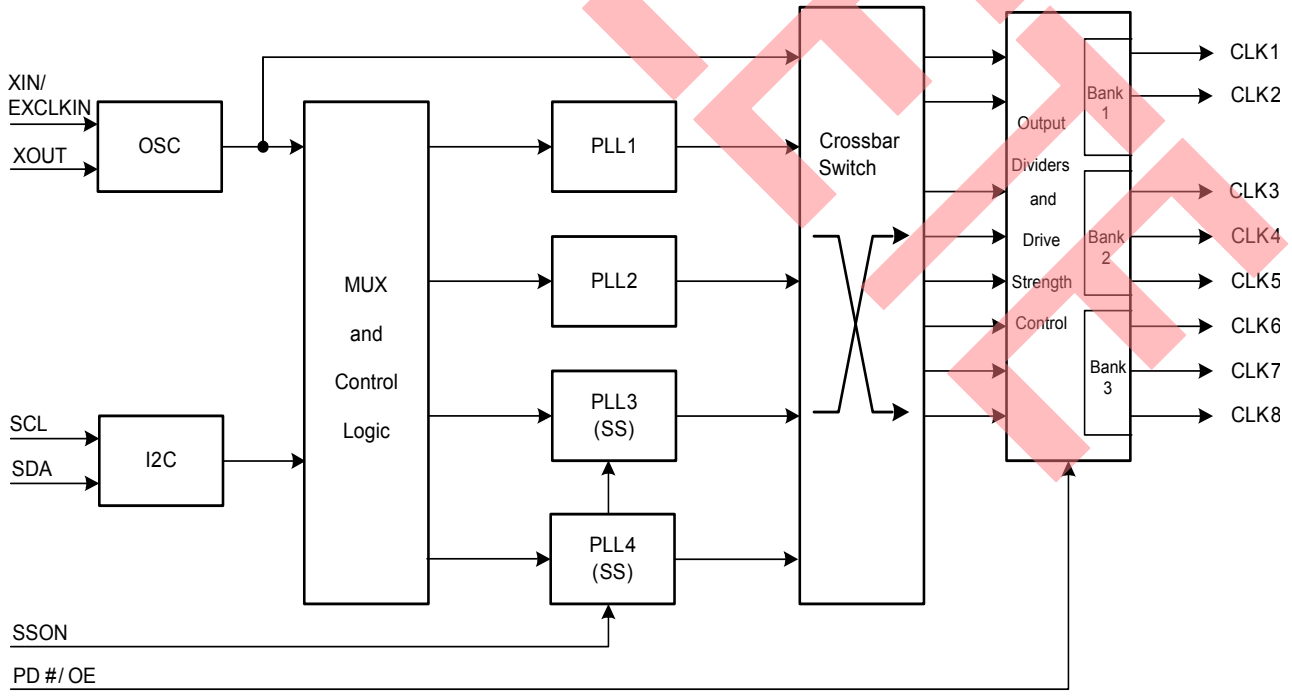

Contents

Pinouts 3
Pin Definitions 4
Pinouts 5
Pin Definitions 6
General Description 7
Four Configurable PLLs 7
I2C Programming 7
Input Reference Clocks 7
Output Power Supply Options 7
Output Source Selection 7
Spread Spectrum Control 7
PD#/OE Mode 7
Keep Alive Mode 7
Output Drive Strength 7
Factory Specific Configuration and Custom Programming 7
Functional Overview 8
I2C Serial Interface 8
Write Operations 8
Read Operations 8
Serial Programming Interface Timing 10
Serial I2C Programming Interface Timing Specifications 10
Absolute Maximum Conditions 11
Recommended Operating Conditions 11
DC Electrical Specifications 12
AC Electrical Specifications 13
Recommended Crystal Specification 14
Recommended Crystal Specification 14
Test and Measurement Setup 15
Voltage and Timing Definitions 15
Ordering Information 16
Possible Configurations 16
Ordering Code Definitions 16
Package Drawing and Dimensions 17
Acronyms 18
Document Conventions 18
Units of Measure 18
Document History Page 19
Sales, Solutions, and Legal Information 20
Worldwide Sales and Design Support 20
Products 20
PSoC® Solutions 20
Cypress Developer Community 20
Technical Support 20

OBSOLETE

Pinouts

Figure 1. 24-pin QFN pinout

MoBL Clock M4000

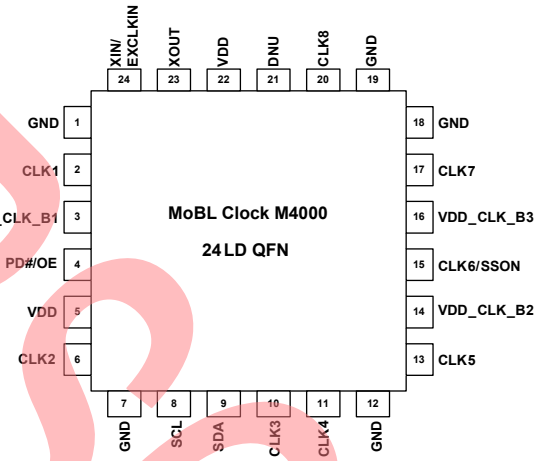

OBSOLETE

Pin Definitions

MoBL Clock M4000 Family (VDD = 1.8 V Supply)

Pin Number	Name	I/O	Description
1	GND	Power	Power Supply Ground
2	CLK1	Output	Programmable Clock Output, Output voltage depends on VDD_CLK_B1 voltage
3	VDD_CLK_B1	Power	Power Supply for Bank1 (CLK1, CLK2) outputs: 1.5 V/1.8 V/2.5 V/3.0 V/3.3 V
4	PD#/OE	Input	Multifunction Programmable pin: Output Enable or Power Down Modes
5	VDD	Power	Power Supply: 1.8 V
6	CLK2	Output	Programmable Clock Output. Output voltage depends on VDD_CLK_B1 voltage
7	GND	Power	Power Supply Ground
8	SCL	Input	Serial Data Clock
9	SDA	Input/Output	Serial Data Input/Output
10	CLK3	Output	Programmable Clock Output. Output voltage depends on VDD_CLK_B2 voltage
11	CLK4	Output	Programmable Clock Output. Output voltage depends on VDD_CLK_B2 voltage
12	GND	Power	Power Supply Ground
13	CLK5	Output	Programmable Clock Output. Output voltage depends on VDD_CLK_B2 voltage
14	VDD_CLK_B2	Power	Power Supply for Bank2 (CLK3, CLK4, CLK5) outputs: 1.5 V/1.8 V/2.5 V/3.0 V/3.3 V
15	CLK6/SSON	Output/Input	Multifunction Programmable pin: Programmable Clock Output or Spread Spectrum control input pin. Output voltage depends on VDD_CLK_B3 voltage
16	VDD_CLK_B3	Power	Power Supply for Bank3 (CLK6, CLK7, CLK8) outputs: 1.5 V/1.8 V/2.5 V/3.0 V/3.3 V
17	CLK7	Output	Programmable Clock Output. Output voltage depends on VDD_CLK_B3 voltage
18	GND	Power	Power Supply Ground
19	GND	Power	Power Supply Ground
20	CLK8	Output	Programmable Clock Output. Output voltage depends on VDD_CLK_B3 voltage
21	DNU	Input	Do Not Use
22	VDD	Power	Power Supply: 1.8 V
23	XOUT	Output	Crystal Output
24	XIN/EXCLKIN	Input	Crystal Input or 1.8 V External Reference Clock Input

OBSOLETE

Pinouts

Figure 2. 24-pin QFN pinout

MoBL Clock M8000

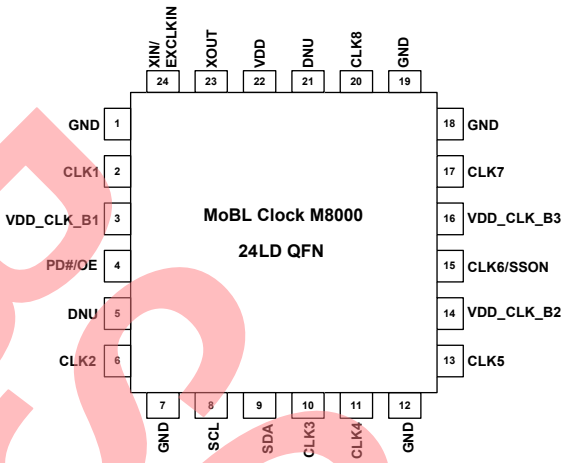

OBSOLETE

Pin Definitions

MoBL Clock M8000 Family (VDD = 2.5 V, 3.0 V or 3.3 V Supply)

Pin Number	Name	I/O	Description
1	GND	Power	Power Supply Ground
2	CLK1	Output	Programmable Clock Output, Output voltage depends on VDD_CLK_B1 voltage
3	VDD_CLK_B1	Power	Power Supply for Bank1 (CLK1, CLK2) outputs: 1.5 V/1.8 V/2.5 V/3.0 V/3.3 V
4	PD#/OE	Input	Multifunction Programmable pin: Output Enable or Power Down Modes
5	DNU	DNU	Do Not Use
6	CLK2	Output	Programmable Clock Output, Output voltage depends on VDD_CLK_B1 voltage
7	GND	Power	Power Supply Ground
8	SCL	Input	Serial Data Clock
9	SDA	Input/Output	Serial Data Input/Output
10	CLK3	Output	Programmable Clock Output, Output voltage depends on VDD_CLK_B2 voltage
11	CLK4	Output	Programmable Clock Output, Output voltage depends on VDD_CLK_B2 voltage
12	GND	Power	Power Supply Ground
13	CLK5	Output	Programmable Clock Output, Output voltage depends on VDD_CLK_B2 voltage
14	VDD_CLK_B2	Power	Power Supply for Bank2 (CLK4, CLK4, CLK5) outputs: 1.5 V/1.8 V/2.5 V/3.0 V/3.3 V
15	CLK6/SSON	Output/Input	Multifunction Programmable pin: Programmable Clock Output or Spread Spectrum ON/OFF control input pin. Output voltage depends on VDD_CLK_B3 voltage
16	VDD_CLK_B3	Power	Power Supply for Bank3 (CLK6, CLK7, CLK8) outputs: 1.5 V/1.8 V/2.5 V/3.0 V/3.3 V
17	CLK7	Output	Programmable Clock Output. Output voltage depends on VDD_CLK_B3 voltage
18	GND	Power	Power Supply Ground
19	GND	Power	Power Supply Ground
20	CLK8	Output	Programmable Clock Output. Output voltage depends on VDD_CLK_B3 voltage
21	DNU	Input	Do Not Use
22	VDD	Power	Power Supply: 2.5 V/3.0 V/3.3 V
23	XOUT	Output	Crystal Output
24	XIN/EXCLKIN	Input	Crystal Input or 1.8 V External Reference Clock Input

OBSOLETE

General Description

Four Configurable PLLs

The MoBL® Clock M4000/M8000 family of products are four-PLL Clock Generator ICs designed for cell phone, portable, or consumer electronics applications. It can be used to generate four independent output frequencies ranging from 3 to 50 MHz from a single input reference clock.

I²C Programming

The MoBL® Clock, M4000 and M8000 have a serial I²C interface that programs the configuration memory array to synthesize output frequencies by programmable output divider, spread characteristics, and drive strength. I²C can also be used for in-system control of these programmable features.

Input Reference Clocks

The input to the M4000 and M8000 can be either a crystal or a clock signal. The input frequency range for crystals is 8 MHz to 48 MHz, while that for EXCLKIN is 1 to 48 MHz. The voltage level for the input reference clock used must meet the voltage requirement for the device as shown in the DC and AC specifications.

Output Power Supply Options

These devices have eight clock outputs grouped in three banks. The Bank 1, Bank 2, and Bank 3 correspond to (CLK1, CLK2), (CLK3, CLK4, CLK5), and (CLK6, CLK7, CLK8) respectively. A separate power supply is used for each of these three output drivers and they can be any of 1.5 V, 1.8 V, 2.5 V, 3.0 V, or 3.3 V giving user multiple choice of output clock voltage levels.

Output Source Selection

These devices have eight clock outputs (CLK1–8). There are five available clock sources for these outputs. These clock sources are: XIN/EXCLKIN, PLL1, PLL2, PLL3 and PLL4. Output clock source selection is done using four out of five crossbar switch. Thus, any one of these five available clock sources can be arbitrarily selected for the clock outputs. This gives user a flexibility to have up to four independent clock and a reference clock outputs.

Spread Spectrum Control

Two of the four PLLs (PLL3 and PLL4) have spread spectrum capability for EMI reduction in the system. The device uses a Cypress proprietary PLL and Spread Spectrum Clock (SSC) technology to synthesize and modulate the frequency of the PLL. The spread spectrum feature can be turned on or off by I²C device programming. It can be factory programmed to either center spread range from ±0.125% to ±2.50%, or down spread range from –0.25% to –5.0%, with Lexmark or Linear modulation profile.

PD#/OE Mode

PD#/OE input (Pin 4) can be programmed to operate as either power down (PD#) or output enable (OE) mode. Note that power down shuts off the entire chip, resulting in minimum power consumption for the device. Setting this signal high brings the device in the operational mode with default register settings. The PD# turn-on time is limited by the turn-on time of the PLLs. Disabled outputs are first driven to a low state before turning off. When off, they are held low by internal weak resistors (~160 k ohms)

When this pin is programmed as Output Enable (OE), clock outputs can be enabled or disabled using OE (pin 4). Individual clock outputs can be programmed to be sensitive to this OE pin.

Keep Alive Mode

By activating the device in the Keep Alive Mode, power down mode is changed to power saving mode, which disables all PLLs and outputs, but preserves the contents of the volatile registers. Thus, any configuration changes made via the I²C interface are preserved. By deactivating the Keep Alive Mode, I²C memory is not preserved during power down, but power consumption is reduced relative to the Keep Alive Mode.

Output Drive Strength

The DC drive strength of the individual clock output can be programmed for different values. Table 1 shows the typical rise and fall times for different drive strength settings.

Table 1. Output Drive Strength

Output Drive Strength	Rise/Fall Time (ns) (Typical Value)
Low	6.8
Mid Low	3.4
Mid High	2.0
High	1.0

Factory Specific Configuration and Custom Programming

The device is available with Factory Specific programmed frequencies as shown in the Ordering Information page. This factory specific programmed part can be used for the device evaluation purposes. The MoBL® Clock can be custom programmed to any desired frequencies and listed features. For customer specific programming and I²C programmable memory bitmap definitions, please contact local Cypress Field Application Engineer (FAE) or sales representative.

OBSOLETE

Functional Overview

I²C Serial Interface

To enhance the flexibility and function of the clock synthesizer, a two-signal I²C serial interface is provided. This interface is used to write (and optionally read) control registers that control various device functions such as enabling individual clock output buffers. The registers initialize to their default setting upon power up and therefore, use of this interface is optional. Clock device registers are normally changed upon system initialization. Any data written via I²C is volatile and is not retained when the device is powered down.

The I²C interface uses two signals, SDA and SCL, that operates up to 400 kbits/s in Read or Write mode. The SDA and SCL timing and data transfer sequence is shown in Figure 3 on page 9. The basic Write serial format is as follows:

Start Bit; 7-bit Device Address (DA); R/$\overline{W}$ Bit; Slave Clock Acknowledge (ACK); 8-bit Memory Address (MA); ACK; 8-bit Data; ACK; 8-bit Data in MA+1 if desired; ACK; 8-bit Data in MA+2; ACK; etc. until STOP Bit. The basic serial format is illustrated in Figure 4 on page 9.

Device Address

The device serial interface address is 69H. The device address is combined with a read/write bit as the LSB and is sent after each start bit.

Data Valid

Data is valid when the clock is HIGH, and can only be transitioned when the clock is LOW, as illustrated in Figure 5 on page 9.

Data Frame

Every new data frame is indicated by a start and stop sequence, as illustrated in Figure 6 on page 10.

Start Sequence – SDA going LOW when SCL is HIGH indicates a Start Frame. Every time a start signal is supplied, the next 8-bit data must be the device address (seven bits) and a R/$\overline{W}$ bit, followed by register address (eight bits) and register data (eight bits).

Stop Sequence – SDA going HIGH when SCL is HIGH indicates a Stop Frame. A Stop Frame frees the bus to write to another part on the same bus or to write to another random register address.

Acknowledge Pulse

During Write Mode, the MoBL Clock M4000 responds with an Acknowledge pulse after every eight bits. This is done by pulling the SDA line LOW during the N*9th clock cycle, as illustrated in Figure 7 on page 10 (N = the number of bytes transmitted). During Read Mode, the master generates the acknowledge pulse after reading the data packet.

Write Operations

Writing Individual Bytes

A valid write operation must have a full 8-bit register address after the device address word from the master, which is followed by an acknowledge bit from the slave (ack = 0/LOW). The next eight bits must contain the data word intended for storage. After the receiving the data word, the slave responds with another acknowledge bit (ack = 0/LOW), and the master must end the write sequence with a STOP condition.

Writing Multiple Bytes

To write multiple bytes at a time, the master must not end the write sequence with a STOP condition, but instead sends multiple contiguous bytes of data to be stored. After each byte, the slave responds with an acknowledge bit, the same as after the first byte, and accepts data until the acknowledge bit is responded to by the STOP condition. When receiving multiple bytes, the MoBL Clock M4000/M8000 internally increments the register address.

Read Operations

Read operations are initiated the same way as Write operations except that the R/W bit of the slave address is set to ‘1’ (HIGH). There are three basic read operations: current address read, random read, and sequential read.

Current Address Read

The MoBL Clock M4000/M8000 have an onboard address counter that retains ‘1’ more than the address of the last word accessed. If the last word written or read was word ‘n’, then a current address read operation returns the value stored in location ‘n+1’. When the MoBL Clock M4000/M8000 receives the slave address with the R/W bit set to a ‘1’, it issues an acknowledge and transmits the 8-bit word. The master device does not acknowledge the transfer, but generates a STOP condition, which causes the MoBL Clock M4000/M8000 to stop transmission.

Random Read

Through random read operations, the master may access any memory location. To perform this type of read operation, first set the word address. To do this, send the address to the MoBL Clock M4000/M8000 as part of a write operation. After the word address is sent, the master generates a START condition following the acknowledge. This terminates the write operation before any data is stored in the address, but not before the internal address pointer is set. Next, the master reissues the control byte with the R/W byte set to ‘1’. The MoBL Clock M4000/M8000 then issues an acknowledge and transmits the 8-bit word. The master device does not acknowledge the transfer, but generates a STOP condition, which causes the MoBL Clock M4000/M8000 to stop transmission.

Sequential Read

Sequential read operations follow the same process as random reads except that the master issues an acknowledge instead of a STOP condition after transmission of the first 8-bit data word. This action increments the internal address pointer, and subsequently outputs the next 8-bit data word. By continuing to issue acknowledges instead of STOP conditions, the master serially reads the entire contents of the slave device memory. When the internal address pointer points to the FFH register, after the next increment, the pointer points to the 00H register.

OBSOLETE

Figure 3. Data Transfer Sequence on the Serial Bus

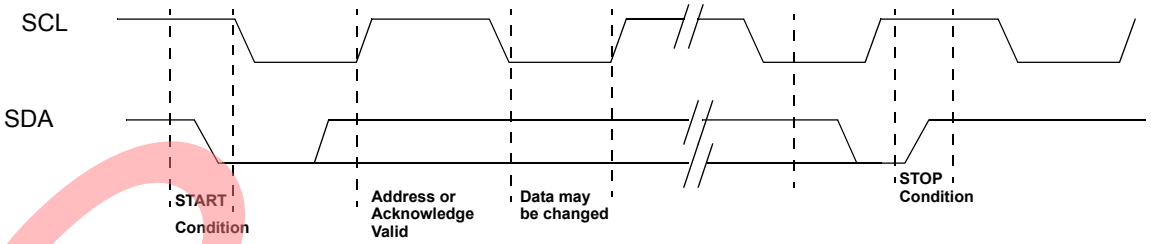

Figure 4. Data Frame Architecture

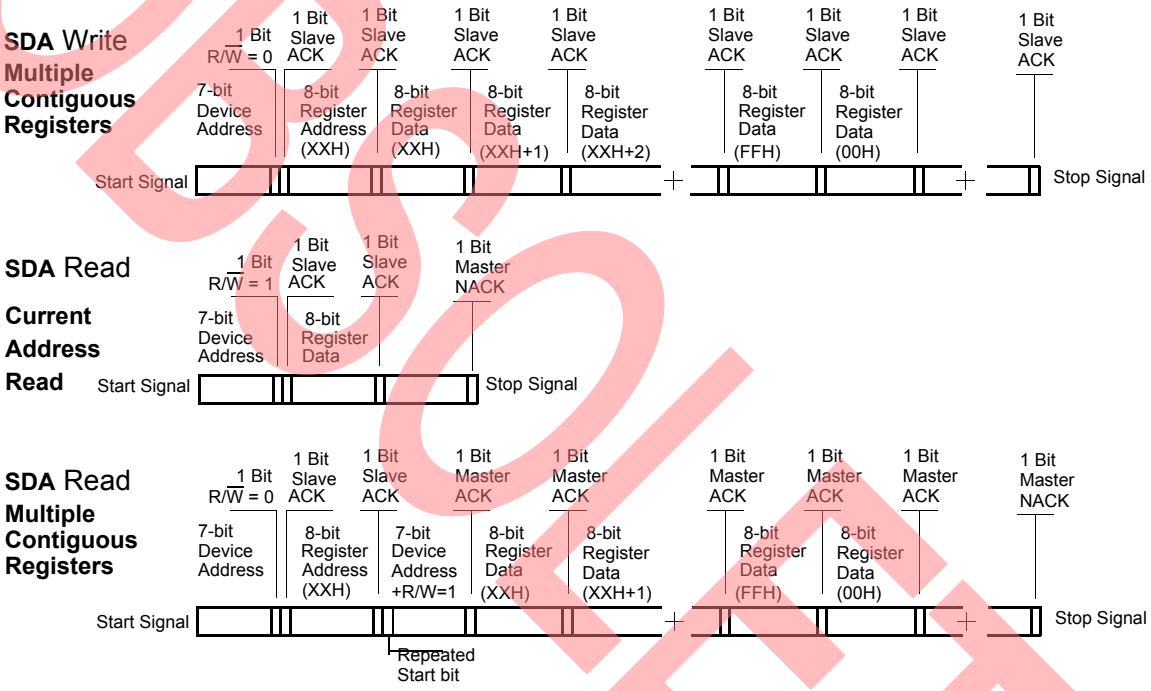

Figure 5. Data Valid and Data Transition Periods

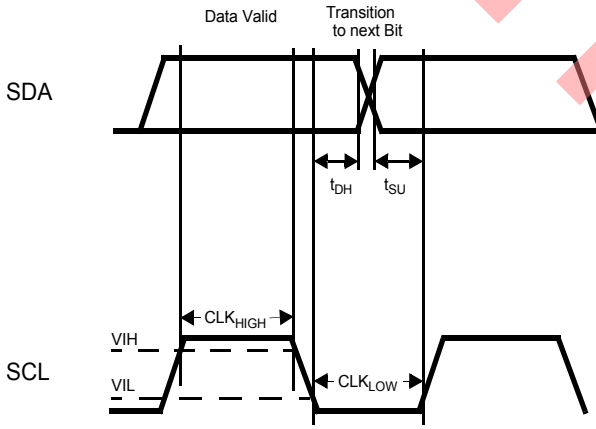

OBSOLETE

Serial Programming Interface Timing

Figure 6. Start and Stop Frame

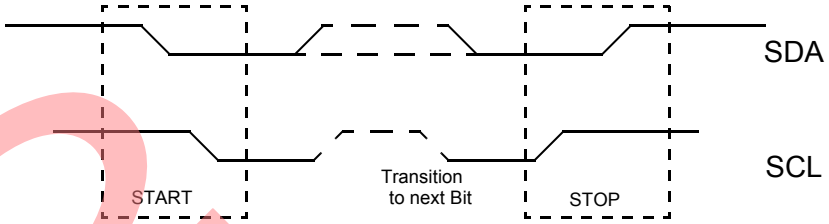

Figure 7. Frame Format (Device Address, R/$\overline{W}$, Register Address, Register Data)

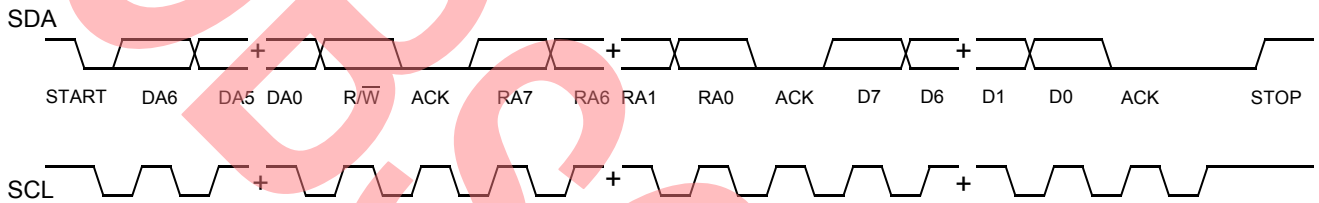

Serial I²C Programming Interface Timing Specifications

Parameter	Description	Min	Max	Unit
f_{SCL}	Frequency of SCL	–	400	kHz
	Start Mode Time from SDA LOW to SCL LOW	0.6	–	µs
CLK_{LOW}	SCL LOW Period	1.3	–	µs
CLK_{HIGH}	SCL HIGH Period	0.6	–	µs
t_{SU}	Data Transition to SCL HIGH	250	–	ns
t_{DH}	Data Hold (SCL LOW to data transition)	0	–	ns
	Rise Time of SCL and SDA	–	300	ns
	Fall Time of SCL and SDA	–	300	ns
	Stop Mode Time from SCL HIGH to SDA HIGH	0.6	–	µs
	Stop Mode to Start Mode	1.3	–	µs

OBSOLETE

Absolute Maximum Conditions

Parameter	Description	Condition	Min	Max	Unit
V_{DD}	Supply Voltage for MoBL Clock M80xx		–0.5	4.4	V
V_{DD}	Supply Voltage for MoBL Clock M40xx		–0.5	2.8	V
V_{DD_CLKX}	Supply Voltage for MoBL Clock M40xx/M80xx		–0.5	4.4	V
V_{IN}	Input Voltage for MoBL Clock M80xx	Relative to V_{SS}	–0.5	V_{DD} + 0.5	V
V_{IN}	Input Voltage for MoBL Clock M40xx	Relative to V_{SS}	–0.5	2.2	V
T_S	Temperature, Storage	Non Functional	–65	+150	°C
ESD_{HBM}	ESD Protection (Human Body Model)	JEDEC EIA/JESD22-A114-E	2000	–	V
UL-94	Flammability Rating	V-0 @1/8 in.	–	10	ppm
MSL	Moisture Sensitivity Level		3		

Recommended Operating Conditions

The Recommended Operating Conditions table for MoBL Clock M40xx/M80xx family.

Parameter	Description	Min	Typ	Max	Unit
V_{DD}	VDD Operating voltage for MoBL Clock M80xx	2.25	–	3.60	V
V_{DD}	VDD Operating voltage for MoBL Clock M40xx	1.65	1.80	1.95	V
$V_{DD_CLK_BX}$	Output Driver Voltage for MoBL Clock M40xx/M80xx	1.43	–	3.60	V
T_{AI}	Industrial Ambient Temperature	–40	–	85	°C
C_{LOAD}	Maximum Load Capacitance	–	–	15	pF
t_{PU}	Power up time for all V_{DD}s to reach minimum specified voltage (power ramps must be monotonic)	0.05	–	500	ms

OBSOLETE

DC Electrical Specifications

DC Electrical Specification table for MoBL Clock M40xx/M80xx family ($V_{DD_CLK_BX}$ = 1.5 V/1.8 V/2.5 V/3.0 V/3.3 V)

Parameter	Description	Conditions	Min	Typ	Max	Unit
V_{OL}	Output Low Voltage, CLK pins	I_{OL} = 2 mA, drive strength = [00]	–	–	0.4	V
		I_{OL} = 3 mA, drive strength = [01]				
		I_{OL} = 7 mA, drive strength = [10]				
		I_{OL} = 12 mA, drive strength = [11]				
V_{OH}	Output High Voltage, CLK pins	I_{OH} = –2 mA, drive strength = [00]	$V_{DD_CLK_BX}$ – 0.4	–	–	V
		I_{OH} = –3 mA, drive strength = [01]				
		I_{OH} = –7 mA, drive strength = [10]				
		I_{OH} = –12 mA, drive strength = [11]				
V_{OLSD}	Output Low Voltage, SDA	I_{OL} = 4 mA	–	–	0.4	V
V_{IL1}	Input Low Voltage of SSON, PD#/OE, SDA and SCL pins		–	–	0.2 × V_{DD}	V
V_{IL2}	Input Low Voltage of EXCLKIN pin		–	–	0.15	V
V_{IH1}	Input High Voltage of SSON, PD#/OE, SDA and SCL pins		0.8 × V_{DD}	–	–	V
V_{IH2}	Input High Voltage of EXCLKIN pin		1.6	–	2.2	V
I_{IL1}	Input Low Current, PD#/OE pin	V_{IL} = 0 V	–	–	10	µA
I_{IH1}	Input High Current, PD#/OE pin	V_{IH} = V_{DD}	–	–	10	µA
I_{IL2}	Input Low Current, SSON pin	V_{IL} = 0 V (Internal pull down resistor = 160k typ.)	–	–	10	µA
I_{IH2}	Input High Current, SSON pin	V_{IH} = V_{DD} (Internal pull down resistor = 160k typ.)	14	–	36	µA
R_{DN}	Pull Down Resistor of clocks (CLK1-CLK8) in off-state	Clock outputs in off-state by setting PD# = Low	100	160	250	kΩ
I_{DD} [1, 2]	Supply Current	All outputs running, C_{LOAD} = 0	–	15	–	mA
I_{DDS}[1]	Standby Current	PD# = Low, and I^2C circuit not in Keep Alive Mode	–	3	–	µA
C_{IN}[2]	Input Capacitance	SCL, SDA, SSON and PD#/OE inputs	–	–	7	pF

OBSOLETE

Notes
1. This parameter is configuration dependent. The specified value is for the drive level setting of [1,1].
2. Parameters are guaranteed by design and characterization. Not 100% tested in production. All parameters specified with fully loaded outputs.

AC Electrical Specifications

AC Electrical Specification table for M40xx/M80xx family ($V_{DD_CLK_BX}$ = 1.5 V/1.8 V/2.5 V/3.0 V/3.3 V)

Parameter	Description	Conditions	Min	Typ	Max	Unit
F_{CLK}	Clock Output Frequency	All clock outputs	3	–	50	MHz
F_{REF} (crystal)	Crystal Frequency, XIN		8	–	48	MHz
F_{REF} (clock)	Input Clock Frequency, EXCLKIN		1	–	48	MHz
DC	Output Clock Duty Cycle	Duty Cycle is defined in Figure 9 on page 15; t_1/t_2, measured at 50% of $V_{DD_CLK_BX}$	45	50	55	%
T_{RF1}[3]	Output Clock Rise/Fall Time	Measured from 20% to 80% of $V_{DD_CLK_BX}$, as shown in Figure 10 on page 15, C_{LOAD} = 15 pF, drive strength = [00]	–	6.8	10.0	ns
T_{RF2}[3]	Output Clock Rise/Fall Time	Measured from 20% to 80% of $V_{DD_CLK_BX}$, as shown in Figure 10 on page 15, C_{LOAD} = 15 pF, drive strength = [01]	–	3.4	5.0	ns
T_{RF3}[3]	Output Clock Rise/Fall Time	Measured from 20% to 80% of $V_{DD_CLKX_BX}$, as shown in Figure 10 on page 15, C_{LOAD} = 15 pF, drive strength = [10]	–	2.0	3.0	ns
T_{RF4}[3]	Output Clock Rise/Fall Time	Measured from 20% to 80% of $V_{DD_CLKX_BX}$, as shown in Figure 10 on page 15, C_{LOAD} = 15 pF, drive strength = [11]	–	1.0	1.5	ns
T_{CCJ}[3, 4]	Cycle-to-cycle Jitter	EXCLKIN = CLKx = 48 MHz, C_{LOAD} = 15 pF, 4 PLLs and 1 output for each PLL enabled, drive strength = [11]	–	150	–	ps
T_{LOCK}[3]	PLL Lock Time		–	1	3	ms

OBSOLETE

Notes
3. Parameters are guaranteed by design and characterization. Not 100% tested in production. All parameters specified with fully loaded outputs.
4. This parameter is configuration dependent. The specified value is for the drive level setting of [1,1].

Recommended Crystal Specification

For SMD Package

Parameter	Description	Range 1	Range 2	Range 3	Unit
Fmin	Minimum Frequency	8	14	28	MHz
Fmax	Maximum Frequency	14	28	48	MHz
R1	Motional Resistance (ESR)	135	50	30	Ω
C0	Shunt Capacitance	4	4	2	pF
CL	Parallel Load Capacitance	18	14	12	pF
DL(max)	Maximum Crystal Drive Level	300	300	300	µW

Recommended Crystal Specification

For Thru-Hole Package

Parameter	Description	Range 1	Range 2	Range 3	Unit
Fmin	Minimum Frequency	8	14	24	MHz
Fmax	Maximum Frequency	14	24	32	MHz
R1	Motional Resistance (ESR)	90	50	30	Ω
C0	Shunt Capacitance	7	7	7	pF
CL	Parallel Load Capacitance	18	12	12	pF
DL(max)	Maximum Crystal Drive Level	1000	1000	1000	µW

OBSOLETE

Test and Measurement Setup

Figure 8. Test and Measurement Setup

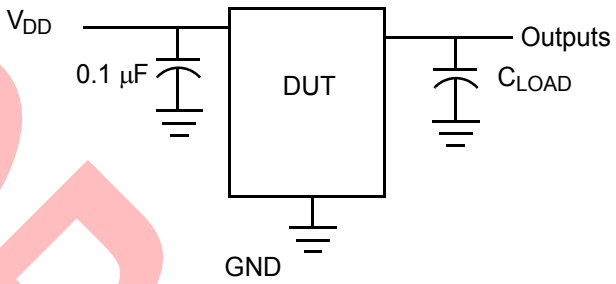

Voltage and Timing Definitions

Figure 9. Duty Cycle Definition

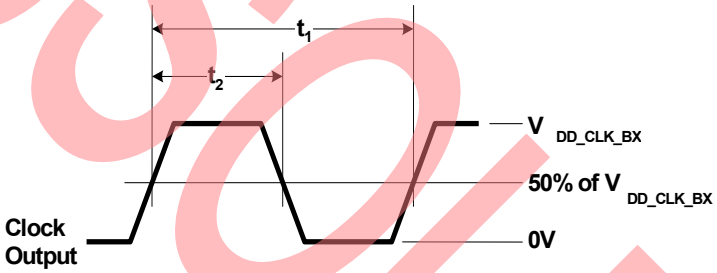

Figure 10. Rise Time = T_{RF}, Fall Time = T_{RF}

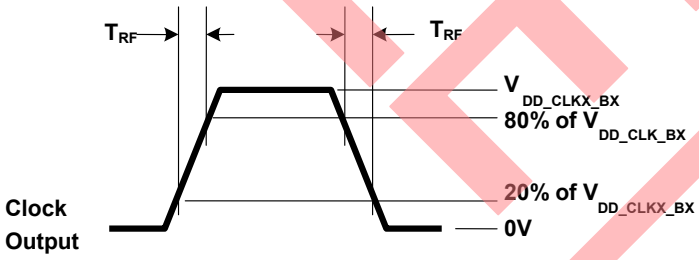

OBSOLETE

Ordering Information

All product offerings are factory programmed customer specific devices with customized part numbers. The Possible Configurations table shows the available device types, but not complete part numbers. Contact your local Cypress FAE or Sales Representative for more information.

Possible Configurations

Part Number [5]	Frequency Configuration	VDD (V)	Package	Production Flow
Pb-free				
M40xxLFXI	Customer Specific Configuration EXCLKIN = xxxx MHz CLK1 = xxxx MHz, CLK2 = xxxx MHz CLK3 = xxxx MHz, CLK4 = xxxx MHz CLK5 = xxxx MHz, CLK6 = xxxx MHz CLK7 = xxxx MHz, CLK8 = xxxx MHz	VDD = 1.8 V VDD_CLK_Bx = 1.5/1.8/2.5/3.0/3.3 V	24-pin QFN	Industrial, –40 °C to 85 °C
M40xxLFXIT	Customer Specific Configuration EXCLKIN = xxxx MHz CLK1 = xxxx MHz, CLK2 = xxxx MHz CLK3 = xxxx MHz, CLK4 = xxxx MHz CLK5 = xxxx MHz, CLK5 = xxxx MHz CLK7 = xxxx MHz, CLK8 = xxxx MHz	VDD = 1.8V VDD_CLK_Bx = 1.5/1.8/2.5/3.0/3.3 V	24-pin QFN-Tape & Reel	Industrial, –40 °C to 85 °C
M80xxLFXI	Customer Specific Configuration EXCLKIN = xxxx MHz CLK1 = xxxx MHz, CLK2 = xxxx MHz CLK3 = xxxx MHz, CLK4 = xxxx MHz CLK5 = xxxx MHz, CLK5 = xxxx MHz CLK7 = xxxx MHz, CLK8 = xxxx MHz	VDD = 2.5/3.0/3.3 V VDD_CLK_Bx = 1.5/1.8/2.5/3.0/3.3 V	24-pin QFN	Industrial, –40 °C to 85 °C
M80xxLFXIT	Customer Specific Configuration EXCLKIN = xxxx MHz CLK1 = xxxx MHz, CLK2 = xxxx MHz CLK3 = xxxx MHz, CLK4 = xxxx MHz CLK5 = xxxx MHz, CLK5 = xxxx MHz CLK7 = xxxx MHz, CLK8 = xxxx MHz	VDD = 2.5/3.0/3.3 V VDD_CLK_Bx = 1.5/1.8/2.5/3.0/3.3 V	24-pin QFN-Tape & Reel	Industrial, –40 °C to 85 °C

Ordering Code Definitions

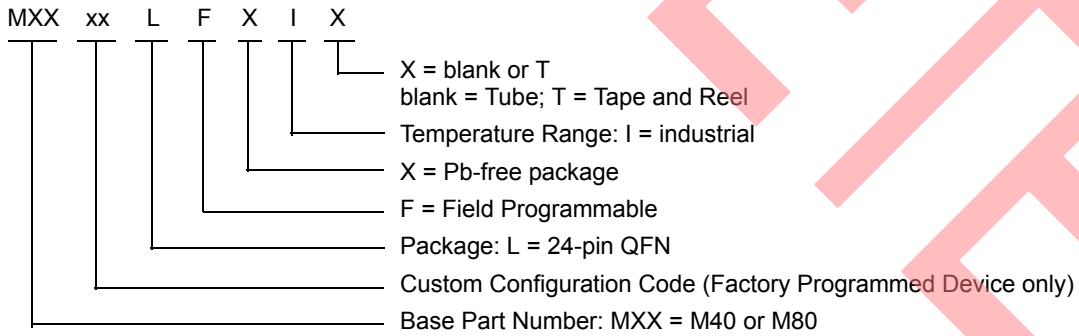

OBSOLETE

Note
5. xx indicates factory programmed parts based on customer specific configuration. For more details, contact your local Cypress FAE or Sales Representative

Package Drawing and Dimensions

Figure 11. 24-pin QFN (4 × 4 mm) LF24A/LY24A 2.49 × 2.49 E-Pad (Subcon Punch Type Pkg.) Package Outline, 51-85203

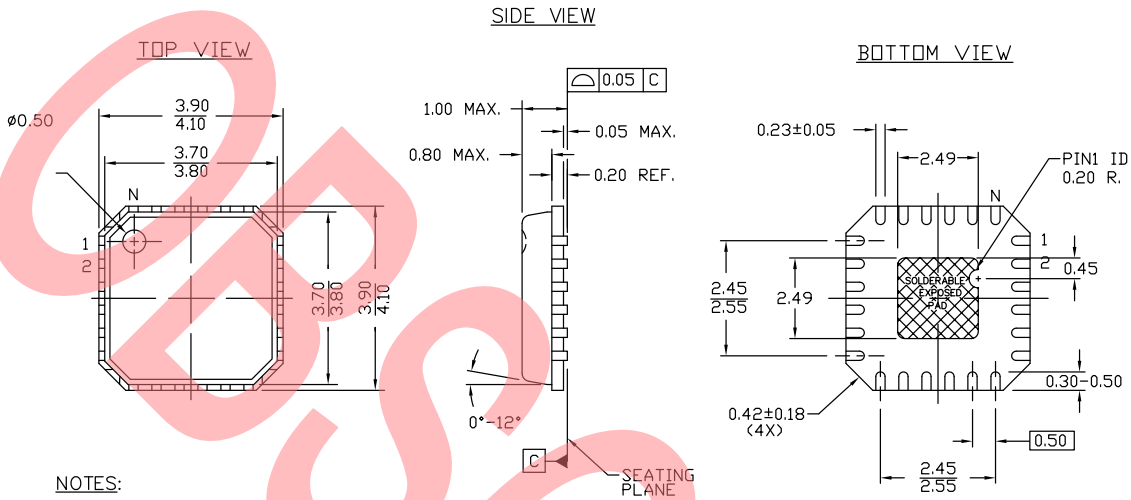

NOTES:

1. HATCH IS SOLDERABLE EXPOSED METAL.
2. REFERENCE JEDEC#: MO-220
3. PACKAGE WEIGHT: REFER TO PMDD SPEC.
4. ALL DIMENSIONS ARE IN MM [MIN./MAX]
5. PACKAGE CODE

PART #	DESCRIPTION
LF24A	STANDARD
LY24A	LEAD FREE

51-85203 *D

OBSOLETE

Acronyms

Acronym	Description
EMI	Electromagnetic Interference
FAE	Field Application Engineer
OE	Output Enable
PLL	Phase Locked Loop
QFN	Quad Flat No-lead
SSC	Spread Spectrum Clock

Document Conventions

Units of Measure

Symbol	Unit of Measure
°C	degree Celsius
kΩ	kilohm
kHz	kilohertz
MHz	megahertz
µA	microampere
µs	microsecond
µW	microwatt
mA	milliampere
mm	millimeter
ms	millisecond
ns	nanosecond
Ω	ohm
ppm	parts per million
%	percent
pF	picofarad
ps	picosecond
V	volt

OBSOLETE

Document History Page

Document Title: MoBL® Clock M4000/M8000, Four-PLL Programmable Clock Generator for Portable Applications Document Number: 001-29179				
Rev.	**ECN No.**	**Submission Date**	**Orig. of Change**	**Description of Change**
**	1535771	See ECN	RGL / AESA	New data sheet.
*A	2750166	08/10/2009	TSAI	Post to external web.
*B	2897317	03/22/10	KVM	Moved 'xx' parts to Possible Configurations table Updated package diagram
*C	3104025	12/07/2010	BASH	Added Ordering Code Definitions under Ordering Information. Added Acronyms and Units of Measure. Minor edits. Updated to new template.
*D	4205912	11/29/2013	CINM	Updated Package Drawing and Dimensions: spec 51-85203 – Changed revision from *B to *D. Updated to new template. Completing Sunset Review.
*E	4571725	11/18/2014	CINM	Updated Functional Description: Added "For a complete list of related documentation, click here." at the end. Updated Functional Overview: Updated I2C Serial Interface: Updated Figure 4 (Replaced "ACK" with "NACK" in the last label in SDA Read Current Address Read and SDA Read Multiple Contiguous Registers).
*F	5197001	03/30/2016	PSR	Obsolete document.

OBSOLETE

Sales, Solutions, and Legal Information

Worldwide Sales and Design Support

Cypress maintains a worldwide network of offices, solution centers, manufacturer's representatives, and distributors. To find the office closest to you, visit us at Cypress Locations.

Products

Automotive	cypress.com/go/automotive
Clocks & Buffers	cypress.com/go/clocks
Interface	cypress.com/go/interface
Lighting & Power Control	cypress.com/go/powerpsoc cypress.com/go/plc
Memory	cypress.com/go/memory
PSoC	cypress.com/go/psoc
Touch Sensing	cypress.com/go/touch
USB Controllers	cypress.com/go/USB
Wireless/RF	cypress.com/go/wireless

PSoC® Solutions

psoc.cypress.com/solutions

PSoC 1 | PSoC 3 | PSoC 4 | PSoC 5LP

Cypress Developer Community

Community | Forums | Blogs | Video | Training

Technical Support

cypress.com/go/support

OBSOLETE

© Cypress Semiconductor Corporation, 2007-2016. The information contained herein is subject to change without notice. Cypress Semiconductor Corporation assumes no responsibility for the use of any circuitry other than circuitry embodied in a Cypress product. Nor does it convey or imply any license under patent or other rights. Cypress products are not warranted nor intended to be used for medical, life support, life saving, critical control or safety applications, unless pursuant to an express written agreement with Cypress. Furthermore, Cypress does not authorize its products for use as critical components in life-support systems where a malfunction or failure may reasonably be expected to result in significant injury to the user. The inclusion of Cypress products in life-support systems application implies that the manufacturer assumes all risk of such use and in doing so indemnifies Cypress against all charges.

Any Source Code (software and/or firmware) is owned by Cypress Semiconductor Corporation (Cypress) and is protected by and subject to worldwide patent protection (United States and foreign), United States copyright laws and international treaty provisions. Cypress hereby grants to licensee a personal, non-exclusive, non-transferable license to copy, use, modify, create derivative works of, and compile the Cypress Source Code and derivative works for the sole purpose of creating custom software and or firmware in support of licensee product to be used only in conjunction with a Cypress integrated circuit as specified in the applicable agreement. Any reproduction, modification, translation, compilation, or representation of this Source Code except as specified above is prohibited without the express written permission of Cypress.

Disclaimer: CYPRESS MAKES NO WARRANTY OF ANY KIND, EXPRESS OR IMPLIED, WITH REGARD TO THIS MATERIAL, INCLUDING, BUT NOT LIMITED TO, THE IMPLIED WARRANTIES OF MERCHANTABILITY AND FITNESS FOR A PARTICULAR PURPOSE. Cypress reserves the right to make changes without further notice to the materials described herein. Cypress does not assume any liability arising out of the application or use of any product or circuit described herein. Cypress does not authorize its products for use as critical components in life-support systems where a malfunction or failure may reasonably be expected to result in significant injury to the user. The inclusion of Cypress' product in a life-support systems application implies that the manufacturer assumes all risk of such use and in doing so indemnifies Cypress against all charges.

Use may be limited by and subject to the applicable Cypress software license agreement.

MoBL is a registered trademark of Cypress Semiconductor Corporation.

Purchase of I²C components from Cypress or one of its sublicensed Associated Companies conveys a license under the Philips I²C Patent Rights to use these components in an I²C system, provided that the system conforms to the I²C Standard Specification as defined by Philips. As from October 1st, 2006 Philips Semiconductors has a new trade name - NXP Semiconductors.

All products and company names mentioned in this document may be the trademarks of their respective holders.