Please note that Cypress is an Infineon Technologies Company.
The document following this cover page is marked as “Cypress” document as this is the company that originally developed the product. Please note that Infineon will continue to offer the product to new and existing customers as part of the Infineon product portfolio.

Continuity of document content
The fact that Infineon offers the following product as part of the Infineon product portfolio does not lead to any changes to this document. Future revisions will occur when appropriate, and any changes will be set out on the document history page.

Continuity of ordering part numbers
Infineon continues to support existing part numbers. Please continue to use the ordering part numbers listed in the datasheet for ordering.

CY9DF126 - Atlas

CY9DF126 Series

General Description

CY9DF126 series is based on Cypress's advanced Arm architecture (32-bit with instruction pipeline for RISC-like performance). Improvements compared to the previous generation include significantly improved performance at higher frequency, reduced power consumption and faster start-up time.

For highest processing speed at optimized power consumption an internal PLL can be selected to supply the CPU with up to 128 MHz operation frequency from an external resonator.

Note Arm, Cortex, Thumb and CoreSight are the trademarks of Arm Limited in the EU and other countries.

Note APIX® is a registered mark of INOVA Semiconductors GmbH.

Features

High-Performance/High Memory Content

- Arm® Cortex®-R4, 8KB D-Cache, 8KB I-Cache
- 32-Bit Armv7 architecture
- 205 DMIPS
- 2MB Internal Flash
- 64KB Internal EEFlash (Data Flash)
- 208KB Internal RAM with ECC

Connectivity

- 3x CAN, 2 x LIN-USART, 3 x SPI, 1 x I2C, 2 x I2S
- Up to six Stepper Motor Control (SMC) outputs
- HS-SPI (memory mapped access)
- APIX 1 x PHY / 2 x AIC
- External Bus Interface (24-bit address/16-bit data)

Safety Features/Security Features

- Multiple Memory Production Units (MPU)
- Peripheral Protection Units (PPU)
- Timing Protection Unit (TPU)
- CRC of Flash, Cache, and RAM
- Watchdog
- Flash-, Debug- and Test-Security

Other Features

- Up/Down Counters
- Programmable Pulse Generators
- ADC - 50 channels
- Sound Generator
- Free Running/Reload Timers
- Real-Time Clock (RTC)
- Input Capture Units, Output Compare units
- 32 external Interrupts

Low Power

- Switchable Power Domains
- 16KB Retention RAM
- Flexible Clock Control
- Debugging/Testing
- Arm Coresight Debug and Trace
- Debugging via JTAG Interface
- Boundary Scan

Characteristics

- 5V capable IOs
- Ta: –40 °C to +105 °C
- Package: LQFP-176

Applications

- Classical Automotive Instruments Cluster with pointers
- Vehicle Controller for Virtual Cluster and Head Units in cards
- APIX TX support 500, 250, 125 Mbps pixel data link transmission and 62.5, 41.67, 31.25, 20.83 Mbps sideband data reception

Errata: For information on silicon errata, see "Errata" on page 291. Details include trigger conditions, devices affected, and proposed workaround.

Block Diagram

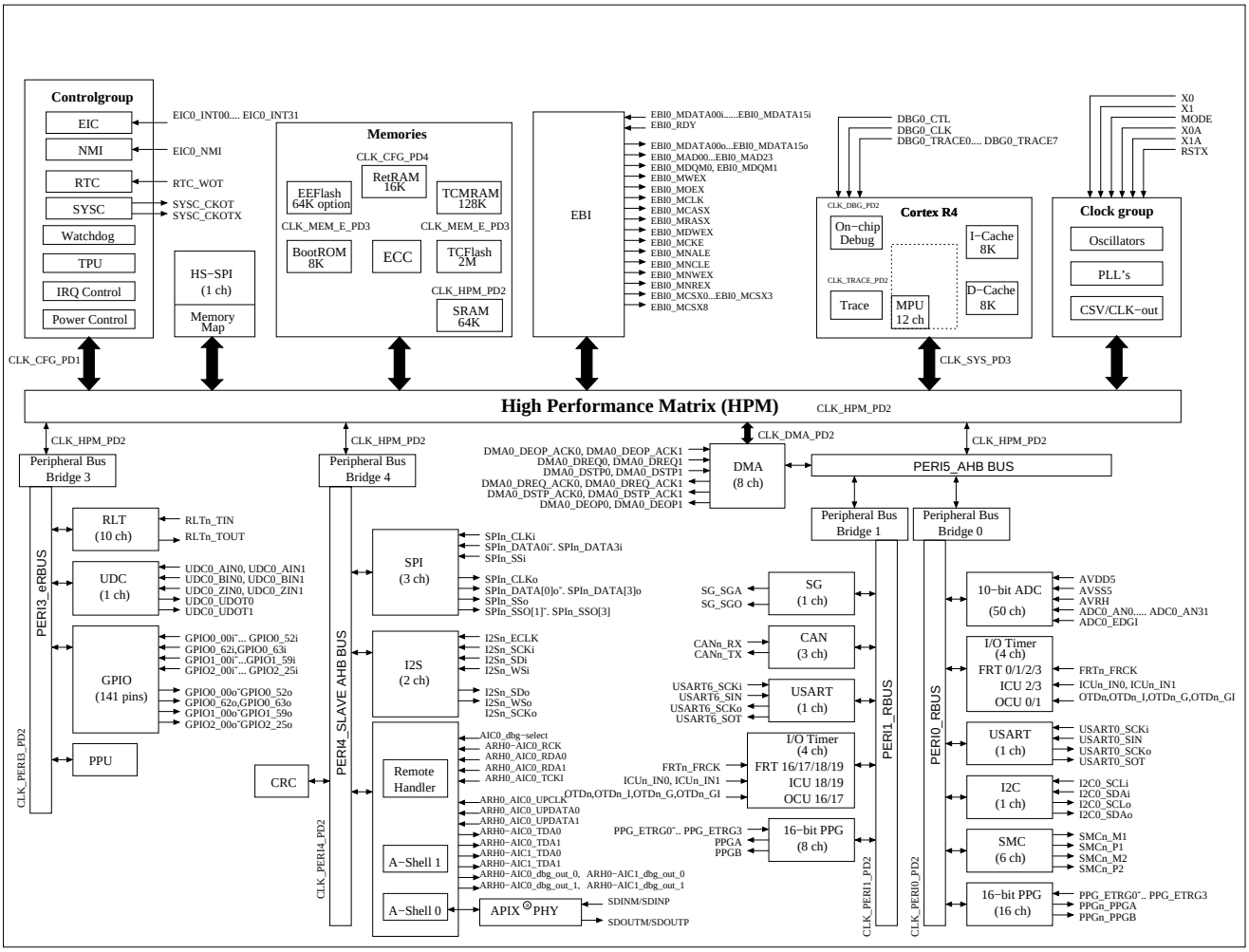

Power Domain

Power Domain	Modules
PD1	Clockgroup (Osc, PLL, CSV), Controlgroup (EIC, NMI, RTC, SYSC, WDG, TPU, IRQ Control, Power Control)
PD2	Peripheral bus 0 (ADC, FRT, ICU, OCU, USART, I2C, SMC, PPG), Peripheral bus 1 (SG, CAN, USART, FRT, ICU, OCU, PPG), Peripheral bus 3 (RLT, UDC, GPIO, PPU), Peripheral bus 4 (SPI, ARH, APIX, I2S), On-Chip Debug, Trace, SRAM, CRC
PD3	Cortex R4, MPU, I-Cache, D-Cache, TCM, TCFlash, EEFlash, TPU, BootROM, HS-SPI, EBI
PD4	RetRAM

Contents

CY9DF126 Overview and Features 4
Resource Distribution for Non-Modulated Clock 14
Lock/Unlock Values for Protection Units 14
ID-Values for Module Identification Registers 15
Package and Pin Assignment 16
Package 16
IO Circuit Types 21
I/O Pins and Functions 25
Interrupt / DMA 66
NMI 72
DMA Overview 73
PPU 77
Master ID 78
I/O Map 79
Electrical Characteristics 236
Absolute Maximum Ratings 236
Recommended Operating Conditions 240
DC Characteristics 241
AC Characteristics 247
Analog Digital Converter 264
FLASH Memory Program/Erase Characteristics for TCFLASH and EEFLASH 267
RC Oscillator Frequency 268
ESD Structure between Power Domains 270
Procedures 272
Boundary scan 272
Flash Parallel Programming 274
Memory Map 279
Debug and Trace 285
Handling Devices 287
Preventing Latch-up 287
Handling of Unused Input Pins 287
Power Supply Pins 287
Power on Sequence 287
Pin State while Power-On-Reset 288
Crystal Oscillator Circuit 289
Notes on using External Clock 289
Errata 291
Ordering Information 312
Appendix 313
Workaround for Flash Erase Suspend Issue 313
Workaround for TCFlash TCM Access 314
Workaround for TCFlash AXI Access 316
Workaround for External Bus Hang-Up 318
Workaround for EEFlash Single Bit ECC Error 318
Workaround for IRQ Unit Register Read Timing Issue 319
Workaround for IUNIT Interrupt Handling Problem 326
Rootcause for APIX VDDA Current Problem 328
Workaround for APIX VDDA Current Problem 329
Limitation for Undefined Port Pin State while Core Supply (VDD) is Unavailable 330
Document History Page 333
Document History 334
Sales, Solutions, and Legal Information 336
Worldwide Sales and Design Support 336
Products 336
PSoC® Solutions 336
Cypress Developer Community 336
Technical Support 336

CY9DF126 Overview and Features

Table 1. Overview

Feature	CY9DF126 / QFP-176
Max. Core frequency	128 MHz
DMA	8 channels
TCFlash	2 MB
EEFlash	64 KB
AXI RAM (with ECC)	64 KB
TCM RAM (with ECC)	128 KB
RetRAM	16 KB
Core has 4-way-associative cache	I/D each 8KB
Boot-ROM	8 KB
IRQ Ctrl	256
RTC (with auto calibration)	1 channel
Source clock timer	4
RLT (Reload Timer) (32 bit)	10 channels
FRT	8 channels
ICU	8 channels
OCU	8 channels
PPG	24 channels
SG (Sound Generator)	1 channel
UDC (UpDown Counter)	2 channels
CAN	3 channels
USART (LIN-USART)	2 channels
SPI	3 channels
I2C	1 channel
I2S	2 channels
ARH (Automotive Remote Handler)	2 channels (1 channel physical)
Quad - SPI	1 channel
External bus	24-bit address/16-bit data
EIC (External Interrupts)	32 channels
NMI (intern / extern)	32/1
SMC	6 channels
ADC (10-bit)	50 channels (including 24 channels shared with SMC)
CRC	1 channel
Package	QFP-176

Table 2. Feature

Feature	Description
Technology	■ 90nm CMOS with embedded flash
Processor Subsystem	■ Cortex R4 CPU core ■ 32-bit Arm architecture, dual-issue superscalar eight stage pipeline ■ Armv7 and Thumb-2 instruction set compliant ■ Memory Protection Unit (MPU) with 12 regions ■ Two Tightly Coupled Memory (TCM) ports. 64-bit AXI slave port for access to TCMs ■ 64-bit AXI master port ■ Vectored Interrupt Controller (VIC) port for faster interrupt processing ■ Single error correction, double error detection (SECDED) Error Correction Coding (ECC) for memory error detection and correction ■ Instruction cache: 8KB 4-way set-associative ■ Data cache: 8KB 4-way set-associative ■ Up to 8 break-points and 8 watchpoints
Debug and Trace	■ Arm Coresight technology ■ Standard 5-pin JTAG interface ■ 4-bit, 8-bit, 16-bit, and 32-bit trace data width supported depending on package ■ Secure entry supported for debugger
Clocks	■ External main clock of 4MHz (up to 8MHz under evaluation) ■ External sub clock (typical 32.768 kHz) ■ Embedded RC oscillator (typical 8/12 MHz, configurable) ■ Embedded Slow RC oscillator (typical 100 kHz) ■ On-chip Phase Locked Loop (PLL) clock multiplier for main clock, Spread Spectrum Clock Generation (SSCG) ■ Stabilization timers for all source clocks
Clock Supervisor	■ Clock supervision for all source clocks and PLL outputs ■ Reset generation for out-of-bound clock frequencies on input source clocks, or PLL output clocks
Resets	■ Power on Reset (PoR) ■ External Reset ■ Software triggered hard reset ■ Clock supervision resets ■ Watchdog ■ Low Voltage Detection reset ■ Software reset
Watchdog Timer	■ 32-bit counter ■ Supports selection of four clock sources (Main clock, Sub clock, RC clock or Slow RC clock) ■ Support for window watchdog functionality ■ Reset or NMI generation support on watchdog errors ■ Support for preemptive warning interrupt before watchdog reset or NMI generation ■ Additional safety provision through three times redundancy and error correction logic for important configuration bits ■ Option to halt watchdog counter in case of core reaching break-point

Table 2. Feature (Continued)

Feature	Description
DMA	■ 64-bit AHB Master Interface ■ 32-bit AHB Slave Interface ■ Block, burst and demand transfer modes ■ Fixed and incremental addressing for source as well as destination ■ 132 clients ■ 8 channels to handle independent data flows ■ Fixed priority, dynamic priority, and round robin arbitration
Interrupts	■ Interrupt Request (IRQ) and Fast Interrupt Request (FIQ) capability ■ NMI sources can generate FIQ ■ Supports 32 Non Maskable Interrupt (NMI) source for FIQ generation ■ Supports 512 Normal Interrupt sources for IRQ generation ■ Supports request for low power mode entry ■ Programmable 32-level priority controller for normal IRQ sources. Also, supports programmable priority level masking ■ Programmable 16-level priority controller for NMI interrupt sources ■ Software interrupt generation ■ Privileged mode support for restricted access
External Interrupts	■ Up to 32 pins can be used as external interrupts ■ Optional 25ns (typical) noise filters on all lines ■ DMA support ■ NMI support ■ Five polarity support (‘H’, ‘L’, rising edge, falling edge, and, any edge) ■ Event capture support for all 32 external interrupt pins ■ Software enabled monitoring of external events, with sampling frequency of 500Hz to 16MHz
Timing Protection	■ Up to eight identical 24-bit timers for execution time protection, locking time protection, inter-arrival time protection or deadline protection ■ Normal and overflow mode support ■ Global linear prescaler (1 to 64) to scale down clock frequency ■ Additional, individual timer prescaler to support 4 different software programmable frequencies (1, 1/2, 1/4, and 1/16) ■ Start, stop, and continue options per timer controllable by software
Memory Protection	■ Memory protection unit for all bus masters ■ AXI interface support ■ 8 programmable memory regions, and one background region which covers entire 4GB address space ■ Unauthorized access generates NMI
Peripheral Protection	■ Protection to all peripherals and General Purpose IOs (GPIO) ■ Individual protection setting for up to 512 peripherals, and 512 GPIO channels ■ DMA access support for faster register configuration
CAN	■ Supports CAN protocol version 2.0 part A and B ■ Bit rates up to 1 Mbps ■ 64 message objects ■ Each message object has its own identifier mask ■ Programmable FIFO mode (concatenation of message objects) ■ Maskable interrupt ■ Disabled automatic retransmission mode for time triggered CAN applications ■ Programmable loop-back mode for self-test operation

Table 2. Feature (Continued)

Feature	Description
USART/LIN	■ Programmable LIN or USART function ■ Full-duplex support ■ Clock synchronous (start-stop synchronization and start-stop-bit option),and Clock asynchronous (using start-, stop-bits) transfer modes ■ Dedicated baud rate generator. Mechanism for automatic baud rate adjust available in LIN mode ■ Support for data length of 7-bits (not in synchronous or LIN mode) and 8-bits ■ Support for signal modes Non-Return to Zero (NRZ) and Non-Return to Zero Inverted (NRZI) ■ Reception error detection for framing, overrun, parity, checksum, sync field timeout, and frame-ID (only in LIN mode) errors ■ Interrupt capability for transmission, reception, and errors ■ DMA support
I2C	■ Master/slave transmitting and receiving functions ■ 7-bit addressing as master and slave ■ 10-bit addressing as master and slave ■ Acknowledge disable option upon slave address reception (master-only operation) ■ Address mirroring to give interface several slave addresses ■ Up to 400 kbps transfer rate ■ Optional noise filters for SDA and SCL ■ Interrupt capability on transmission and bus error events
Stepper Motor Control	■ PWM duty cycle programmable from 0% to 100% ■ Programmable setting to select ‘L’, ‘H’, ‘PWM’ and ‘HighZ’ output ■ High current output pins
A/D Converter	■ 50 channels ■ Conversion time: 1us per channel ■ RC type Successive Approximation (SAR) with sample and hold circuit ■ 10-bit or 8-bit resolution ■ Program selection analog input from 32 channels ■ Single conversion, continuous conversion, and scan conversion options ■ Interrupt capability ■ DMA support ■ 4 range comparator channels for comparing conversion output with thresholds
I2S	■ Programmable master/slave operations ■ Supports transmission only, reception only and simultaneous transmission/reception operations ■ Support for 1 sub frame and 2 sub frame constructions ■ Up to 32 channels supported in each sub frame ■ Support for individual configuration of channel number, channel length, word length in each sub frame ■ Word length support from 7-bits to 32-bits ■ Programmable frequency, polarity, and phase of frame synchronous signal ■ Programmable sampling point of received data (center or at the end of received data) ■ Support for frequency division from 1 to 126 in multiples of 2 ■ DMA support ■ Interrupt capability

Table 2. Feature (Continued)

Feature	Description
Sound Generator	■ Produces sound/melody with varying frequency and amplitude ■ Square wave sound output with frequency of 100Hz – 6kHz (resolution 20Hz) ■ Programmable Pulse Width Modulated (PWM) cycle width of 255 or 511 clocks. PWM duty cycle programmable from 0% to 100% ■ Two 2-bit prescaler with programmable clock division of 1, 1/2, 1/3, and 1/4 ■ Automatic linear or exponential amplitude increment or decrement ■ Start, stop, resume functionality ■ DMA support ■ Automatic sound output stop when amplitude becomes 0
Up Down Counter	■ Format: 32-bit or 2 times 16-bit ■ Three count modes (timer mode, up/down count mode, and phase difference count mode) supported ■ Multiply by 2 or multiply by 4 in phase difference count mode ■ Count source can be internal clock or external trigger ■ Counting range: any value between 0 and 2^{32}-1 can be set ■ 4 interrupt options (Compare-match interrupt, Underflow interrupt, Overflow interrupt, and Count direction change interrupt)
Reload Timers	■ 32-bit reload counter ■ External and Internal clock/event source ■ Trigger signal programmable as rising/falling edge or both ■ Gated count function ■ One-shot or reload counter mode ■ Counter state can be made visible at external pin ■ Prescaler with six different settings for the internal clock and two settings for the external clock ■ Several Reload Timers can be cascaded to form a longer Reload Timer ■ DMA support
Free Running Timers	■ Signals an interrupt on overflow, match with Compare registers, zero-detection, or match with Compare Clear Register ■ Option to mask zero detection, compare clear match interrupt, or both to allow for interrupt generation only after multiple events ■ Programmable timer period up to 1 s ■ Support for 11 counter clocks. Prescaler with 1, 1/2, 1/4, 1/8, 1/16, 1/32, 1/64, 1/128, 1/256, 1/512, and 1/1024 of peripheral clock frequency ■ DMA support
Input Capture Units	■ Consists of 2 independent input channels ■ 16-bit wide capture registers per channel ■ Signals an interrupt upon external event ■ Rising edge, falling edge or rising & falling edge sensitive ■ DMA support
Output Compare Units	■ Consists of 2 independent channels ■ 16-bit wide ■ Signals an interrupt when a match with 16-bit I/O Timer occurs ■ A pair of compare registers can be used to generate an output signal ■ Interrupt capability

Table 2. Feature (Continued)

Feature	Description
Programmable Pulse Generator	■ 16-bit down counter, cycle and duty setting registers ■ Interrupt at trigger, counter borrow and/or duty match ■ PWM operation and one-shot operation ■ Internal prescaler allows 1, 1/4, 1/16, 1/64 of peripheral clock as counter clock and Reload timer underflow as clock input ■ Can be triggered by software or reload timer
Real Time Clock	■ Can be clocked from main clock, sub clock or RC clock ■ Automatic calibration support even when device is in low power state ■ Interrupt capability on half-second, 1 second, 1 minute, 1 hour, and 1 day duration ■ Additional capability for interrupt generation on calibration failure detection and calibration done event ■ Auto calibration of Sub clock or RC clock with respect to Main clock ■ Separate clock selector for calibration ■ Configurable calibration duration ■ Auto/manual trigger for calibration
Internal Memories- TCMRAM	■ 128 KB ■ 64-bit interface ■ Single error correction, double error detection (SECDED) ECC support
Internal Memories- System RAM	■ 64-bit AXI interface ■ 64 KB ■ Single error correction, double error detection (SECDED) ECC support ■ Parallel read/write capability for 2 different banks
Internal Memories- Retention RAM	■ 16 KB ■ 4 banks ■ 32-bit AHB ■ Low leakage RAMs for low power consumption
Tightly Coupled Flash Memory	■ 2 MB ■ Parallel Programming support ■ Mapped to TCM address space as well as Cacheable address space through AXI interface ■ Single error correction, double error detection (SECDED) ECC support ■ TCM address space supports only read access ■ Cacheable AXI address space supports write and read access ■ Detection of hang-up 1 state ■ 32 large sectors of 64KB each ■ 16 small sectors of 8KB each ■ Sector-wise access protection for write and read accesses
EEPROM Emulation Flash Memory	■ 64 KB ■ Parallel Programming support ■ Single error correction, double error detection (SECDED) ECC support ■ Support for sector erase ■ EEPROM emulation mode support ■ Support for mirroring of memory in 3 diverse memory-mapped regions ■ 8 sectors of 8KB each ■ Sector-wise access protection for write and read accesses

Table 2. Feature (Continued)

Feature	Description
Quad SPI	■ Supports legacy as well as the dual-bit and quad-bit modes of SPI operation ■ Supports up to four slave devices in master mode ■ Programmable transfer rate, active-level of slave-select signal, polarity, and phase of the serial clock per slave select ■ Support for memory mapped operation of external serial flash and serial SRAM devices in command sequencer mode ■ Additional direct mode support for standard SPI operation through FIFO interface
Error Collection	■ Error collection on all peripherals ■ Optional Non-Maskable Interrupt (NMI) generation capability
Low Voltage Detect	■ Low voltage detection for 5V, 3.3V, and 1.2V ■ Programmable thresholds ■ Reset generation capability on low voltage events
I/O Ports	■ All functional pins can be used as GPIO ■ Programmable analog or digital functionality selection ■ Programmable input levels (Automotive, CMOS, and TTL) ■ Programmable pull-up/pull-down and output drive
EBI	■ Endianess configuration support for all SRAM interfaces based on chip select ■ PPU Protection for EBI Configuration register range ■ Only 32-bit write access support supported by EBI Configuration registers ■ Lock/Unlock register for write protection for EBI Configuration registers
APIX	■ Support 500, 250, 125 Mbps pixel data transmission ■ Support 62.5, 41.67, 31.25, 20.83 Mbps side band data reception ■ Support loop back test mode (BIST logic) ■ Monitoring PLL lock detection over Osc clock glitches
ARH	■ PPU protection for register access ■ Debug support for RAM ■ Registers accesses based on Lock status ARHn_RHCTRL:LST bit, ARHn_TST:TM bit, on transaction buffer state, and on tx_config from Remote Handler ■ Arbitration between S/W read and A-Shell write over the event buffer
CRC	■ Programmable 8, 16, 24 or 32 bit input data width ■ Programmable polynomial value (Polynomial degree from 2 to 32) ■ Programmable initial seed value ■ Programmable final checksum XOR value ■ Interrupt and DMA client interface ■ Configurable input/output bit reflection and byte swapping ■ Supports PPU ■ Supports block/multiple data transfers (more than 32-bit)
Packages	QFP-176 (series variant)
Note EEPROM (Electronically Erasable and Programmable Read-Only Memory)	

Table 3. Memory Map

Start Address	Module
FFFF2000	Reserved
FFFF0000	BOOTROM
FFFEF000	EXCFG
B0D01000	Reserved
B0D00000	SYSTEM_RAM_CONFIG
B0C00000	PERI5_AHB
B0B00000	PERI4_SLAVE
B0A00000	PERI3_ERBUS
B0900000	Reserved
B0800000	PERI1_RBUS
B0700000	PERI0_RBUS
B0600000	MCU_CONFIG
B0500000	DEBUG_BUS
B0400000	MEMORY_CONFIG
B0200000	Reserved
B0180000	EBI
B0080000	Reserved
B0000000	HSSPI0
90000000	Reserved
80000000	HSSPI0_MEMORY
28000000	Reserved
20000000	EBI_MEMORY1
10000000	EBI_MEMORY0
06000000	Reserved
05FE0000	AXI_SLAVE_CORE0_TCM_-FLASH_SMALL_SECTORS
05A00000	Reserved
05800000	AXI_SLAVE_CORE0_TCM_-FLASH_LARGE_SECTORS
05020000	Reserved
05000000	AXI_SLAVE_CORE0_TC-M_RAM
04800000	AXI_SLAVE_CORE0_D-CACHE
04000000	AXI_SLAVE_CORE0_I-CACHE
01A10000	Reserved
01A00000	SYSTEM_RAM
01800000	Reserved
017E0000	AXI_FLASH_MEMO-RY_SMALL_SECTORS
01200000	Reserved

Table 3. Memory Map (Continued)

Start Address	Module
01000000	AXI_FLASH_MEMO-RY_LARGE_SECTORS
00FE0000	TCM_FLASH_SMALL_-SECTORS
00A00000	Reserved
00800000	TCM_FLASH_LARGE_-SECTORS
00020000	Reserved
00000000	TCM_RAM

Table 4. PERI0_RBUS Memory Map

Start Address	Module
B07FFC00	BSU0
B07FA800	Reserved
B07F8000	RICFG0
B07F0400	Reserved
B07F0000	BECU0
B07EC000	Reserved
B07E8000	PPC
B075A000	Reserved
B074C000	PPGGLC0
B074BC00	Reserved
B0748C00	PPGGRP3
B0748800	PPGGRP2
B0748400	PPGGRP1
B0748000	PPGGRP0
B0747C00	Reserved
B073BC00	PPG15
B073B800	PPG14
B073B400	PPG13
B073B000	PPG12
B073AC00	PPG11
B073A800	PPG10
B073A400	PPG9
B073A000	PPG8
B0739C00	PPG7
B0739800	PPG6
B0739400	PPG5
B0739000	PPG4
B0738C00	PPG3
B0738800	PPG2
B0738400	PPG1
B0738000	PPG0
B0732000	Reserved
B0731800	SMCTG0

Table 4. PERI0_RBUS Memory Map (Continued)

Start Address	Module
B0731400	SMC5
B0731000	SMC4
B0730C00	SMC3
B0730800	SMC2
B0730400	SMC1
B0730000	SMC0
B0729800	Reserved
B0728000	USART0
B0720C00	Reserved
B0720000	I2C0
B071C000	Reserved
B0718400	OCU1
B0718000	OCU0
B0714000	Reserved
B0710C00	ICU3
B0710800	ICU2
B0710400	Reserved
B0708C00	FRT3
B0708800	FRT2
B0708400	FRT1
B0708000	FRT0
B0700400	Reserved
B0700000	ADC0

Table 5. PERI1_RBUS Memory Map

Start Address	Module
B08FFC00	BSU1
B08FB000	Reserved
B08F8000	RICFG1
B08F0000	BECU1
B0868000	Reserved
B085C000	PPGGLC1
B085BC00	Reserved
B0858400	PPGGRP17
B0858000	PPGGRP16
B0857C00	Reserved
B0849C00	PPG71
B0849800	PPG70
B0849400	PPG69
B0849000	PPG68
B0848C00	PPG67
B0848800	PPG66
B0848400	PPG65
B0848000	PPG64
B0842000	Reserved

Table 5. PERI1_RBUS Memory Map (Continued)

Start Address	Module
B0838000	USART6
B0830C00	Reserved
B0828400	OCU17
B0828000	OCU16
B0824000	Reserved
B0820C00	ICU19
B0820800	ICU18
B0820400	Reserved
B0818C00	FRT19
B0818800	FRT18
B0818400	FRT17
B0818000	FRT16
B0810400	Reserved
B0808800	CAN2
B0808400	CAN1
B0808000	CAN0
B0800400	Reserved
B0800000	SG0

Table 6. PERI3_eRBUS Memory Map

Start Address	Module
B0AFFC00	BSU3
B0AF9400	Reserved
B0AF8000	RICFG3
B0AF0000	BECU3
B0A28000	Reserved
B0A20000	UDC0
B0A18000	Reserved
B0A12400	RLT9
B0A12000	RLT8
B0A11C00	RLT7
B0A11800	RLT6
B0A11400	RLT5
B0A11000	RLT4
B0A10C00	RLT3
B0A10800	RLT2
B0A10400	RLT1
B0A10000	RLT0
B0A09000	Reserved
B0A08000	GPIO

Table 6. PERI3_eRBUS Memory Map (Continued)

Start Address	Module
B0A00400	Reserved
B0A00000	PPU0

Table 7. PERI4_SLAVE AHB Bus Memory Map

Start Address	Module
B0BFFC00	BSU4
B0BFA400	Reserved
B0BF8000	RICFG4
B0B40400	Reserved
B0B40000	ARH0
B0B3B000	Reserved
B0B38800	SPI2
B0B38400	SPI1
B0B38000	SPI0
B0B30800	Reserved
B0B30000	CRC0
B0B29000	Reserved
B0B20400	I2S1
B0B20000	I2S0
B0B00000	Reserved

Table 8. PERI5_AHB Bus Memory Map

Start Address	Module
B0CFFC00	BSU5
B0CFF800	Reserved
B0C08000	MPUXDMA0
B0C04000	Reserved
B0C00000	DMA0
B0800000	PERI1_RBUS
B0700000	PERI0_RBUS

Table 9. Memory and Config (MEMORY_CONFIG) AHB Bus Memory Map

Start Address	Module
B04C0000	EEFLASH_NOECC_MIR
B0480000	EEFLASH_TABLE_MIR

Table 9. Memory and Config (MEMORY_CONFIG) AHB Bus Memory Map (Continued)

Start Address	Module
B0440000	EEFLASH_ECC_MIR
B0420400	Reserved
B0418000	BSU6
B0412400	Reserved
B0412000	EEFCFG
B0411400	Reserved
B0411000	TCFCFG
B0410400	Reserved
B0410000	TRCFG
B040B400	Reserved
B0408000	TPU0
B0401000	Reserved
B0400000	IRQ0

Table 10. MCU_CONFIG AHB Bus Memory Map

Start Address	Module
B06FFC00	BSU7
B06F9400	Reserved
B06F8000	RICFG7
B0648000	Reserved
B063B000	RETRAMBANK3
B063A000	RETRAMBANK2
B0639000	RETRAMBANK1
B0638000	RETRAMBANK0
B0630000	Reserved
B0628000	EICU0
B0620400	Reserved
B0620000	EIC0
B0618400	Reserved
B0618000	RTC
B0610400	Reserved
B0610000	RRCFG
B0608400	Reserved
B0608000	WDG

Table 10. MCU_CONFIG AHB Bus Memory Map (Continued)

Start Address	Module
B0601000	Reserved
B0600000	SYSC

Table 11. HSSPI0 Memory Map

Start Address	Module
B007FC00	BSU8
B0078400	Reserved
B0078000	RICFG8
B0000000	HSSPI0

Table 12. EBI Memory Map

Start Address	Module
B01FFC00	BSU10
B0180080	Reserved
B0180000	EBI

Resource Distribution for Non-Modulated Clock

Some of the resources are available with modulated and non-modulated clock. Find below the distribution:

Table 13. Resource Distribution for Non-Modulated Clock

Module	Non-Modulated	Modulation Possible
CAN	3	-
SG	1	-
ICU/OCU/FRT	4	4
PPG	8	16
USART/LIN	1	1
I2C	1	-
SMC	-	6

Lock/Unlock Values for Protection Units

For various protection and system relevant units, registers must be unlocked before configuring and can be locked for protection. For the details about functionality, see the FCR4 Hardware Manual.

Table 14. Lock/unlock Values for FCR4 Protection Module Instances

Module	Unlock value	Lock value
TPU0	ACC5A110	B10CACC5
PPU0	ACC5BB01	BB0B10C1
MPUXDMA0	ACCABB56	112ABB56
TRCFG	ACC55ECC	5ECCB10C
EXCFG	ACC5B007	B007ECF6
IRQ0	17ACC911	17B10C11
RRCFG	ACC5DECC	DECCB10C
SCCFG	5ECACCE5	A135331A
SRCFG	5ECC551F	551FB10C
ARH0	A86ACCE5	A86AB10C
ETH0	E18ACCE5	E18B10CC
TCFCFG	CF61F1A5	-
EEFCFG	CF6DF1A5	-
WDG	EDACCE55	-
SYSC	5CACCE55	-
EBI	EB1410CE	10CE0EB1

ID-Values for Module Identification Registers

For several peripheral and system related modules, the hardware contains Module Identification Registers that hold read-only values which contain information about the module number, the version and possible patches.

Table 15. List of Module ID

Module	ID-Register	ID Value
System Controller	SYSC_SYSIDR	0x00020101
Security Checker	SCCFG_MODID	0x00020200
SRAM Interface	SRCFG_MID	0x00040200
TC-Flash Interface	TCFCFG_FMIDR	0x000E0102
EE-Flash Interface	EEFCFG_MIR	0x00090200
Interrupt Controller 0	IRQ0_MID	0x000B0100
DMA Controller 0	DMA0_ID	0x00010102
Timing Protection Unit 0	TPU0_MID	0x00050200
Memory Protection Unit for AXI	MPUXDMA0_MID	0x000D0100
Bus Error Collection Unit 0	BECU0_MIDH / BECU0_MIDL	0x0008 / 0x0100
Bus Error Collection Unit 1	BECU1_MIDH / BECU1_MIDL	0x0008 / 0x0100
Bus Error Collection Unit 3	BECU3_MIDH / BECU3_MIDL	0x0008 / 0x0100
High Speed SPI Interface 0	HSSPI0_MID	0x00060200
SPI Interface 0	SPI0_MID	0x00070200
SPI Interface 1	SPI1_MID	0x00070200
SPI Interface 2	SPI2_MID	0x00070200
Inter IC Sound 0	I2S0_MIDREG	0x000A0200
Inter IC Sound 1	I2S1_MIDREG	0x000A0200
Automotive Remote Handler 0	ARH0_MID	0x000C0200

Package and Pin Assignment

Package

A QFP-176 package will be used for ATLAS. The Cypress code is LQP176.

Figure 1. QFP-176 Package

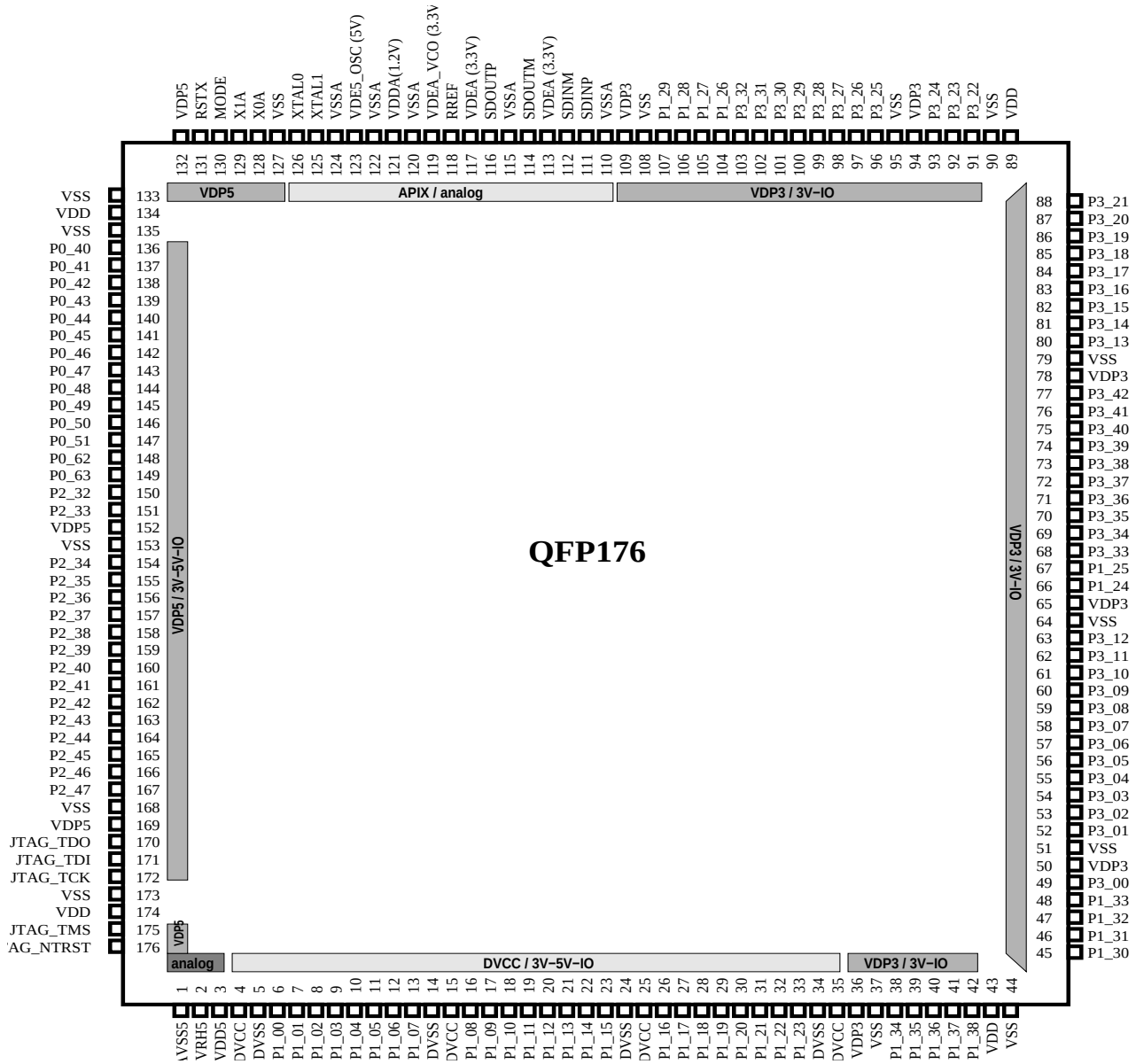

Table 16. QFP-176 Package Pinout

Pin No	Pin Name	IO_Type
1	AVSS5	supply
2	AVRH5	supply
3	AVDD5	supply
4	DVCC	supply
5	DVSS	supply
6	P1_00	SMC
7	P1_01	SMC
8	P1_02	SMC
9	P1_03	SMC
10	P1_04	SMC
11	P1_05	SMC
12	P1_06	SMC
13	P1_07	SMC
14	DVSS	supply
15	DVCC	supply
16	P1_08	SMC
17	P1_09	SMC
18	P1_10	SMC
19	P1_11	SMC
20	P1_12	SMC
21	P1_13	SMC
22	P1_14	SMC
23	P1_15	SMC
24	DVSS	supply
25	DVCC	supply
26	P1_16	SMC
27	P1_17	SMC
28	P1_18	SMC
29	P1_19	SMC
30	P1_20	SMC
31	P1_21	SMC
32	P1_22	SMC
33	P1_23	SMC
34	DVSS	supply
35	DVCC	supply
36	VDP3	supply
37	VSS	supply
38	P1_34	BIDI33
39	P1_35	BIDI33

Table 16. QFP-176 Package Pinout (Continued)

Pin No	Pin Name	IO_Type
40	P1_36	BIDI33
41	P1_37	BIDI33
42	P1_38	BIDI33
43	VDD	supply
44	VSS	supply
45	P1_30	BIDI33
46	P1_31	BIDI33
47	P1_32	BIDI33
48	P1_33	BIDI33
49	P3_00	BIDI33
50	VDP3	supply
51	VSS	supply
52	P3_01	BIDI33
53	P3_02	BIDI33
54	P3_03	BIDI33
55	P3_04	BIDI33
56	P3_05	BIDI33
57	P3_06	BIDI33
58	P3_07	BIDI33
59	P3_08	BIDI33
60	P3_09	BIDI33
61	P3_10	BIDI33
62	P3_11	BIDI33
63	P3_12	BIDI33
64	VSS	supply
65	VDP3	supply
66	P1_24	BIDI33
67	P1_25	BIDI33
68	P3_33	BIDI33
69	P3_34	BIDI33
70	P3_35	BIDI33
71	P3_36	BIDI33
72	P3_37	BIDI33
73	P3_38	BIDI33
74	P3_39	BIDI33
75	P3_40	BIDI33
76	P3_41	BIDI33
77	P3_42	BIDI33
78	VDP3	supply
79	VSS	supply

Table 16. QFP-176 Package Pinout (Continued)

Pin No	Pin Name	IO_Type
80	P3_13	BIDI33
81	P3_14	BIDI33
82	P3_15	BIDI33
83	P3_16	BIDI33
84	P3_17	BIDI33
85	P3_18	BIDI33
86	P3_19	BIDI33
87	P3_20	BIDI33
88	P3_21	BIDI33
89	VDD	supply
90	VSS	supply
91	P3_22	BIDI33
92	P3_23	BIDI33
93	P3_24	BIDI33
94	VDP3	supply
95	VSS	supply
96	P3_25	BIDI33
97	P3_26	BIDI33
98	P3_27	BIDI33
99	P3_28	BIDI33
100	P3_29	BIDI33
101	P3_30	BIDI33
102	P3_31	BIDI33
103	P3_32	BIDI33
104	P1_26	BIDI33
105	P1_27	BIDI33
106	P1_28	BIDI33
107	P1_29	BIDI33
108	VSS	supply
109	VDP3	supply
110	VSSA	supply
111	SDINP	SDIN
112	SDINM	SDIN
113	VDEA (3.3V)	supply
114	SDOUTM	SDOUT
115	VSSA	supply
116	SDOUTP	SDOUT
117	VDEA (3.3V)	supply
118	RREF	RREF
119	VDEA_VCO (3.3V)	supply

Table 16. QFP-176 Package Pinout (Continued)

Pin No	Pin Name	IO_Type
120	VSSA	supply
121	VDDA(1.2V)	supply
122	VSSA	supply
123	VDE5_OSC (5V)	supply
124	VSSA	supply
125	XTAL1	MAINOSC (20MHz)
126	XTAL0	MAINOSC (20MHz)
127	VSS	supply
128	X0A	SUBOSC
129	X1A	SUBOSC
130	MODE	MODE
131	RSTX	MODE
132	VDP5	supply
133	VSS	supply
134	VDD	supply
135	VSS	supply
136	P0_40	BIDI50
137	P0_41	BIDI50
138	P0_42	BIDI50
139	P0_43	BIDI50
140	P0_44	BIDI50
141	P0_45	BIDI50
142	P0_46	BIDI50
143	P0_47	BIDI50
144	P0_48	BIDI50
145	P0_49	BIDI50
146	P0_50	BIDI50
147	P0_51	BIDI50
148	P0_62	I2C
149	P0_63	I2C
150	P2_32	BIDI50
151	P2_33	BIDI50
152	VDP5	supply
153	VSS	supply
154	P2_34	BIDI50
155	P2_35	BIDI50
156	P2_36	BIDI50
157	P2_37	BIDI50
158	P2_38	BIDI50
159	P2_39	BIDI50

Table 16. QFP-176 Package Pinout (Continued)

Pin No	Pin Name	IO_Type
160	P2_40	BIDI50
161	P2_41	BIDI50
162	P2_42	BIDI50
163	P2_43	BIDI50
164	P2_44	BIDI50
165	P2_45	BIDI50
166	P2_46	BIDI50
167	P2_47	BIDI50
168	VSS	supply
169	VDP5	supply
170	JTAG_TDO	JTAGO
171	JTAG_TDI	JTAGIUP
172	JTAG_TCK	JTAGIUP
173	VSS	supply
174	VDD	supply
175	JTAG_TMS	JTAGIUP
176	JTAG_NTRST	JTAGIDN

Figure 2. Package Dimensions QFP-176

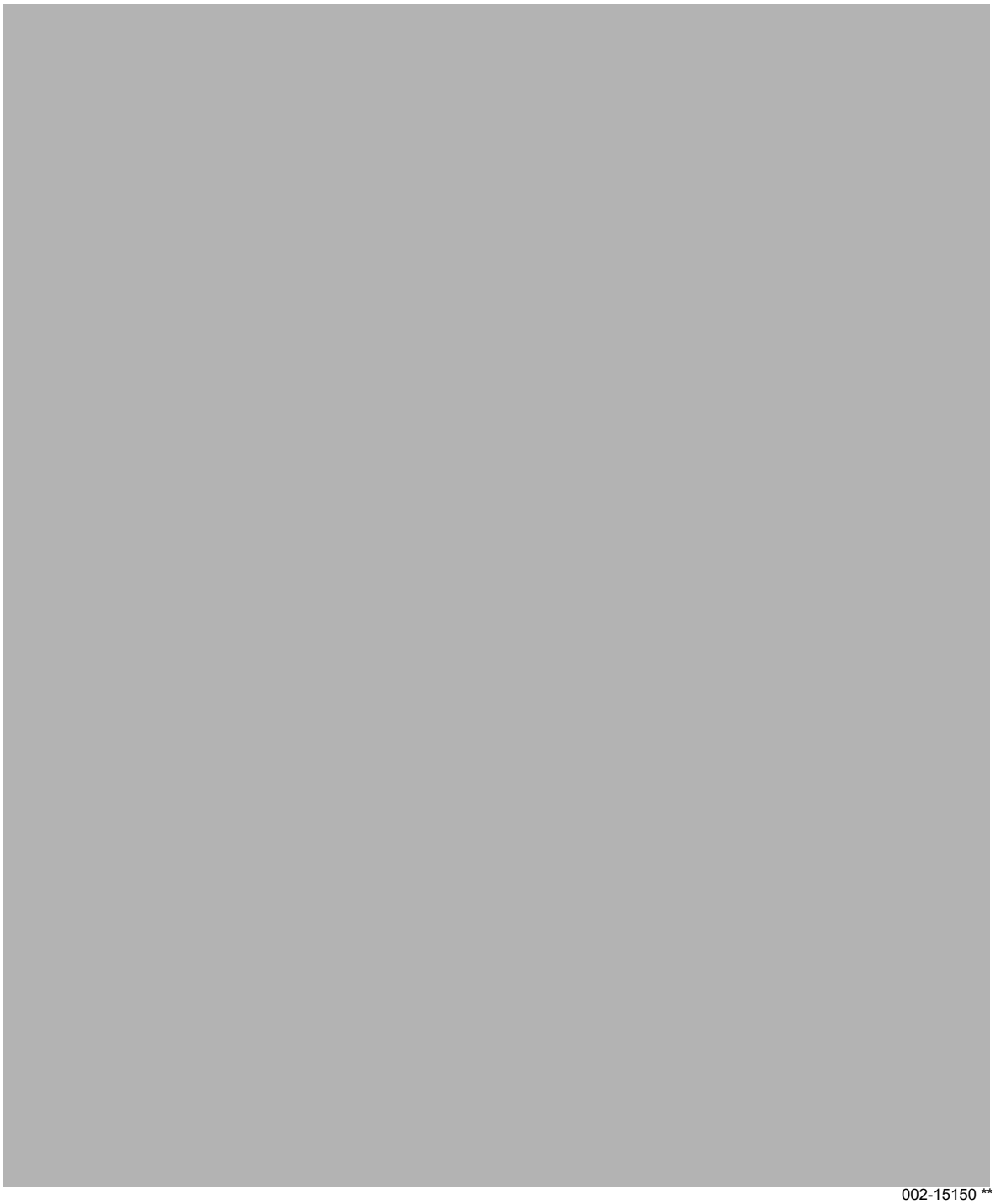

002-15150 **

IO Circuit Types

Table 17. IO Circuit Type

Type	Circuit	Remarks
MAIN-OSC (20MHz or 4MHz)	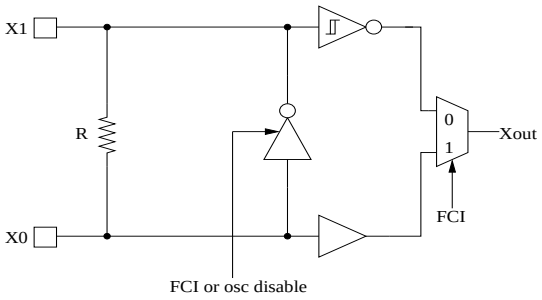	High-speed oscillation circuit: ■ Programmable between oscillation mode (external crystal or resonator connected to X0/X1pins, resp. XTAL0/XTAL1 pins) and Fast external Clock Input (FCI) mode (external clock connected to X0 pin, resp. XTAL0 pin. ■ Input frequency: ❒ 20 MHz type ❒ 4 MHz type
SUBOSC	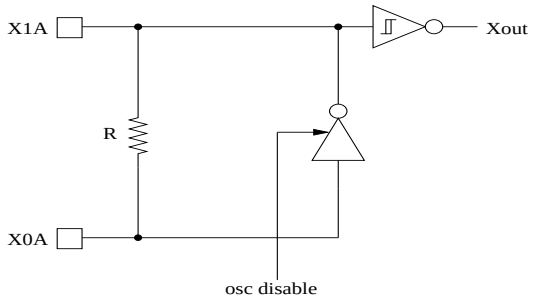	■ Low-speed oscillation circuit
JTAGIDN	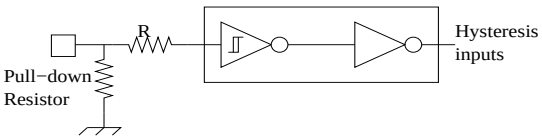	■ TTL level input pin ■ Pull-down resistor value: approx. 50 kΩ
JTAGIUP	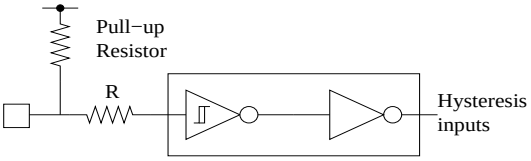	■ TTL level input pin ■ Pull-up resistor value: approx. 50 kΩ
JTAGO	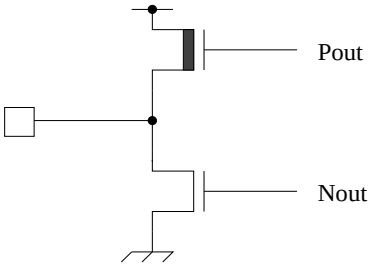	■ CMOS level output ■ Output Driving strength is fixed: IOL: +1 mA, IOH: -1 mA

Table 17. IO Circuit Type (Continued)

<table>
<tr><th>Type</th><th>Circuit</th><th>Remarks</th></tr>
<tr><td>AVRH5</td><td>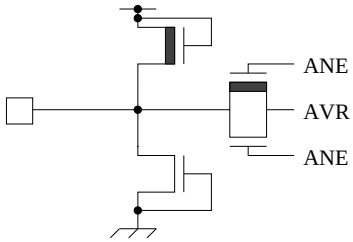
</td><td>■ A/D converter ref+ (AVRH5) power supply input pin with protection circuit
■ Flash devices do not have a protection circuit against VDP5 for pins AVRH5</td></tr>
<tr><td>MODE</td><td>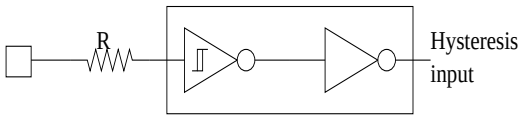
</td><td>■ Hysteresis input pin</td></tr>
<tr><td>BIDI50</td><td>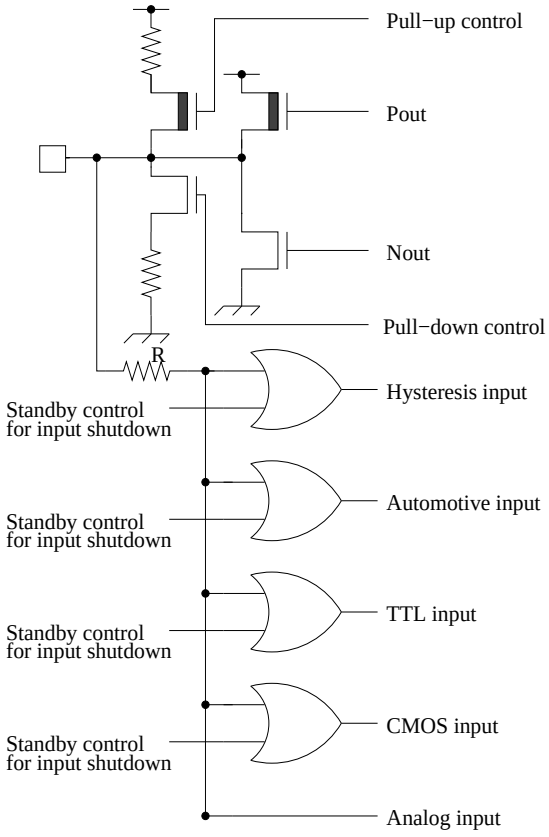
</td><td>■ CMOS level output (programmable)
<table><tr><th>ODR[1:0]</th><th>IOL</th><th>IOH</th></tr><tr><td>00</td><td>+1 mA</td><td>-1 mA</td></tr><tr><td>01</td><td>+2 mA</td><td>-2 mA</td></tr><tr><td>10</td><td>+5 mA</td><td>-5 mA</td></tr><tr><td>11</td><td>+2 mA</td><td>-2 mA</td></tr></table>■ Hysteresis input with input shutdown function
■ Automotive input with input shutdown function
■ TTL input with input shutdown function
■ CMOS input with input shutdown function
<table><tr><th>PIL[1:0]</th><th>Input buffer</th><th>Levels</th></tr><tr><td>00</td><td>Hysteresis</td><td>20% / 80%</td></tr><tr><td>01</td><td>Automotive</td><td>50% / 80%</td></tr><tr><td>10</td><td>TTL</td><td>0.8V / 2V</td></tr><tr><td>11</td><td>CMOS</td><td>20% / 80%</td></tr></table>■ Programmable pull-up and pull-down resistor; 50 kΩ approx.
■ Analog input</td></tr>
</table>

Table 17. IO Circuit Type (Continued)

<table>
<tr><th>Type</th><th>Circuit</th><th>Remarks</th></tr>
<tr><td>BIDI33</td><td>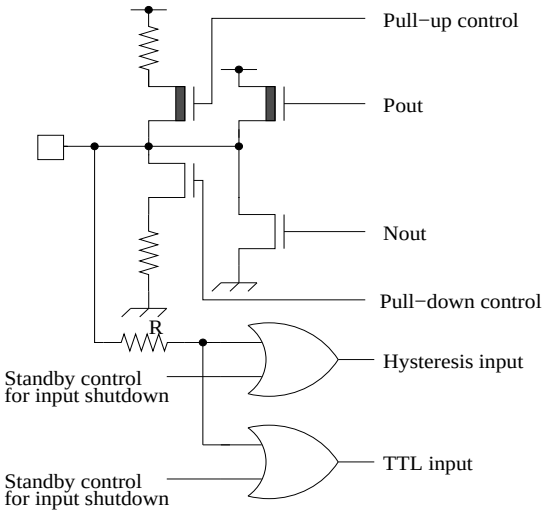
</td><td>■ CMOS level output
<table><tr><th>ODR[1:0]</th><th>IOL</th><th>IOH</th></tr><tr><td>-</td><td>+12 mA</td><td>-12 mA</td></tr></table>■ Hysteresis input with input shutdown function
■ TTL input with input shutdown function
<table><tr><th>PIL[1:0]</th><th>Input buffer</th><th>Levels</th></tr><tr><td>00</td><td>Hysteresis</td><td>20% / 80%</td></tr><tr><td>10</td><td>TTL</td><td>0.8 V / 2 V</td></tr></table>■ Programmable pull-up and pull-down resistor: 33 kΩ approx.</td></tr>
<tr><td>SMC</td><td>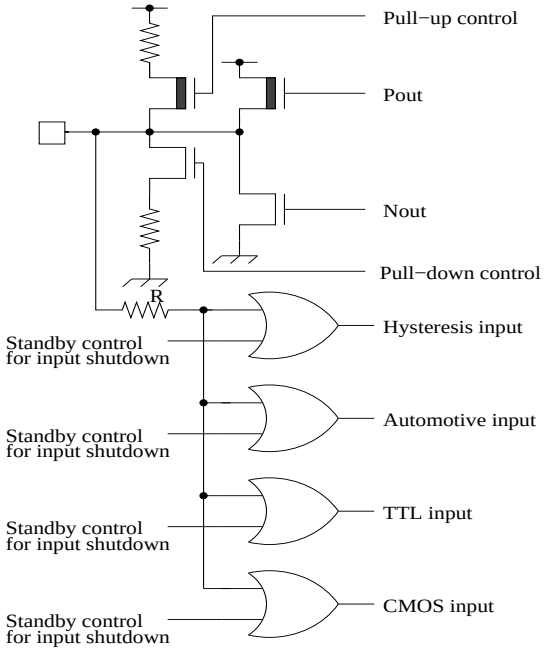
</td><td>■ CMOS level output (programmable)
<table><tr><th>ODR[1:0]</th><th>IOL</th><th>IOH</th></tr><tr><td>00</td><td>+1 mA</td><td>-1 mA</td></tr><tr><td>01</td><td>+2 mA</td><td>-2 mA</td></tr><tr><td>10</td><td>+30 mA</td><td>-30 mA</td></tr><tr><td>11</td><td>+5 mA</td><td>-5 mA</td></tr></table>■ Hysteresis input with input shutdown function
■ Automotive input with input shutdown function
■ TTL input with input shutdown function
■ CMOS input with input shutdown function
<table><tr><th>PIL[1:0]</th><th>Input buffer</th><th>Levels</th></tr><tr><td>00</td><td>Hysteresis</td><td>20% / 80%</td></tr><tr><td>01</td><td>Automotive</td><td>50% / 80%</td></tr><tr><td>10</td><td>TTL</td><td>0.8V / 2V</td></tr><tr><td>11</td><td>CMOS</td><td>20% / 80%</td></tr></table>■ Programmable pull-up resistor and pull down resistor: 50 kΩ approx.</td></tr>
</table>

Table 17. IO Circuit Type (Continued)

<table>
<tr><th>Type</th><th>Circuit</th><th>Remarks</th></tr>
<tr><td>I2C</td><td>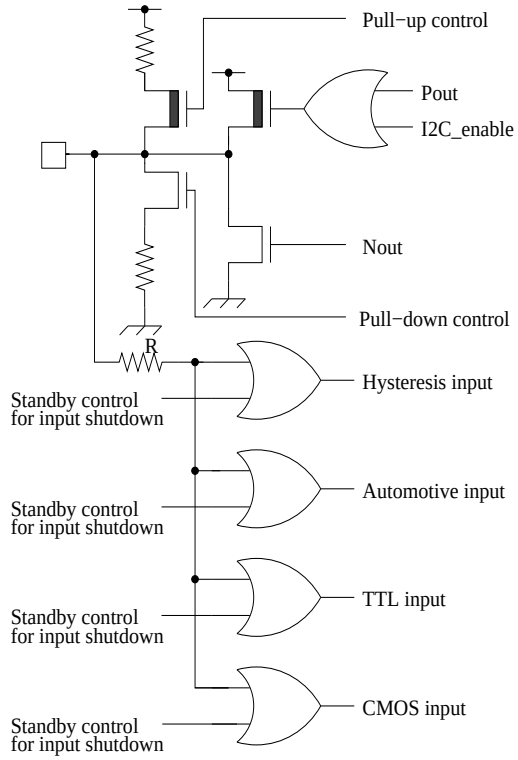
</td><td>■ CMOS level output (programmable)
<table><tr><th>ODR[1:0]</th><th>I2C_enable</th><th>IOL</th><th>IOH</th></tr><tr><td>00</td><td>0</td><td>+1 mA</td><td>-1 mA</td></tr><tr><td>01</td><td>0</td><td>+2 mA</td><td>-2 mA</td></tr><tr><td>10</td><td>0</td><td>+5 mA</td><td>-5 mA</td></tr><tr><td>11</td><td>0</td><td>+2 mA</td><td>-2 mA</td></tr><tr><td>*</td><td>1</td><td>+3 mA</td><td>(Pseudo Open Drain)[1]</td></tr></table>■ Hysteresis input with input shutdown function
■ Automotive input with input shutdown function
■ TTL input with input shutdown function
■ CMOS input with input shutdown function
■ I2C_enable is high, when the corresponding PCFGRxxx_POF value is set to I2C function and the I2C interface module is enabled.
Note
1. For Pseudo Open Drain output logic value “1”, Push/Pull CMOS driver is switched to HIZ state.
<table><tr><th>PIL[1:0]</th><th>Input buffer</th><th>Levels</th></tr><tr><td>00</td><td>Hysteresis</td><td>30% / 70%</td></tr><tr><td>01</td><td>Automotive</td><td>50% / 80%</td></tr><tr><td>10</td><td>TTL</td><td>0.8V / 2V</td></tr><tr><td>11</td><td>CMOS</td><td>30% / 70%</td></tr></table>■ Programmable pull-up resistor and pull-down resistor: 50 kΩ approx.</td></tr>
<tr><td>SDIN / SDOUT / RREF</td><td>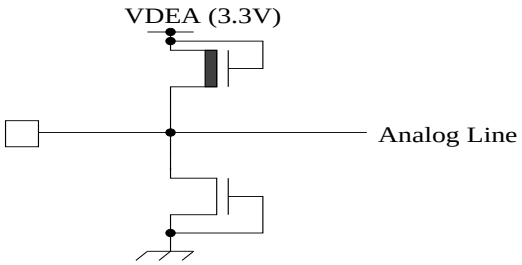
</td><td>■ Analog terminal
■ Type SDIN: Analog input pin with ESD protection
■ Type SDOUT: Analog output line with ESD protection
■ Type RREF: Analog output line with ESD protection</td></tr>
</table>

I/O Pins and Functions

IO Pin configuration needs to be done by writing into Port Pin Multiplexing registers and Resource Input Configuration registers which are described in Port Pin Multiplexing on page 25 and Resource Input Source Table on page 36. The access to the GPIO_PPERn register must be enabled before starting IO Pin configuration, since GPIO_PPERn enables corresponding pin of the device.

Port Pin Multiplexing

Table 18. Port Pin Multiplexing

Register (Offset)	Port	Resource functional output								Possible Resource Function Input
		POF=0	POF=1	POF=2	POF=3	POF=4	POF=5	POF=6	POF=7	
PPC_PCF-GR040 (0x0050)	P0_40	GPIO0_40	SPI2_SS	RTC_WOT		PPG64_PPGB	OCU16_OTD0_G	ARH0_A-IC0_TDA1	PPG8_PPGA	GPIO0_40, EIC0_INT05, EIC0_INT12, EIC0_INT11, SPI2_SS, USART6_SIN, USART0_SIN, FRT0_FRCK, RLT5_TIN, ADC0_AN15
PPC_PCF-GR041 (0x0052)	P0_41	GPIO0_41	SPI2_-DATA1	SYSC_CKOT	USART6_SCK	PPG65_PPGB	OCU16_OTD1_G		PPG9_PPGA	GPIO0_41, EIC0_INT15, SPI2_DATA1, USART6_SCK, USART0_SCK, FRT1_FRCK, RLT6TIN, ARH0_AIC0_TCKI, ICU2_IN0, ICU18_IN1, ADC0_AN16
PPC_PCF-GR042 (0x0054)	P0_42	GPIO0_42	SPI2_-DATA0	SYSC_CKOTX	USART6_SOT	PPG66_PPGB	OCU17_OTD0_G	RLT2_TOT	PPG10_PPGA	GPIO0_42, EIC0_INT08, EIC0_INT10, EIC0_INT11, SPI2_DATA0, CAN0_RX, CAN2_RX, FRT2_FRCK, ARH0_AIC0_RCK, ICU2_IN1, ICU19_IN0, USART0_SIN, ADC0_AN17
PPC_PCF-GR043 (0x0056)	P0_43	GPIO0_43	SPI2_CLK	WDG_OB-SERVE	CAN0_TX	PPG67_PPGB	OCU17_OTD1_G		PPG11_PPGA	GPIO0_43, EIC0_INT09, SPI2_CLK, CAN1_RX, FRT3_FRCK, RLT2_TIN, ARH0_AIC0_RDA1, ADC0_AN18
PPC_PCF-GR044 (0x0058)	P0_44	GPIO0_44	SPI0_SS	SPI2_SSO2	SPI2_-DATA2	PPG68_PPGB	OCU0_OTD0_G	RLT3_TOT	PPG12_PPGA	GPIO0_44, EIC0_INT03, SPI2_DATA2, SPI0_SS, FRT16_FRCK, ARH0_AIC0_RDA0, UDC0_AIN0, ADC0_AN19
PPC_PCF-GR045 (0x005A)	P0_45	GPIO0_45	SPI0_-DATA1	SPI2_SSO3	SPI2_-DATA3	PPG69_PPGB	OCU0_OTD1_G	ARH0_A-IC0_TDA0	PPG13_PPGA	GPIO0_45, EIC0_INT11, EIC0_INT12, FRT16_FRCK, FRT18_FRCK, SPI2_-DATA3, SPI0_DATA1, USART0_SIN, USART6_SIN, FRT17_FRCK, RLT3_TIN, FRT19_FRCK, UDC0_BIN0, ADC0_AN20

Table 18. Port Pin Multiplexing (Continued)

Register (Offset)	Port	Resource functional output								Possible Resource Function Input
		POF=0	POF=1	POF=2	POF=3	POF=4	POF=5	POF=6	POF=7	
PPC_PCF-GR046 (0x005C)	P0_46	GPIO0_46	SPI0_-DATA0	SPI2_SSO1	USART0_SCK	PPG70_PPGB	OCU1_OTD0_G	ARH0_A-IC1_TDA1	PPG14_PPGA	GPIO0_46, EIC0_INT16, SPI0_-DATA0, USART0_SCK, USART6_SCK, FRT18_FRCK, RLT4_TIN, UDC0_ZIN0, ICU18_IN0, ADC0_AN21
PPC_PCF-GR047 (0x005E)	P0_47	GPIO0_47	SPI0_CLK	UDC0_UDOT0	USART0_SOT	PPG71_PPGB	OCU1_OTD1_G		PPG15_PPGA	GPIO0_47, FRT0_FRCK, FRT1_FRCK, FRT2_FRCK, EIC0_INT17, FRT3_FRCK, SPI0_CLK, FRT16_FRCK, FRT17_FRCK, FRT19_FRCK, RLT0_TIN, FRT18_FRCK, ARH0_AIC1_TCKI, EIC0_INT12, ICU18_IN1, USART6_SIN, ADC0_AN22
PPC_PCF-GR048 (0x0060)	P0_48	GPIO0_48	SPI1_SS	SPI0_SSO2	SPI0_-DATA2	PPG0_PPGB	OCU0_OTD0	RLT4_TOT	PPG64_PPGA	GPIO0_48, EIC0_INT04, EIC0_INT09, EIC0_INT08, SPI0_-DATA2, SPI1_SS, CAN1_RX, CAN0_RX, ICU2_IN0, ARH0_A-IC1_RCK, UDC0_AIN1, ADC0_AN23
PPC_PCF-GR049 (0x0062)	P0_49	GPIO0_49	SPI1_-DATA1	SPI0_SSO1	CAN1_TX	PPG1_PPGB	OCU0_OTD1	RLT0_TOT	PPG65_PPGA	GPIO0_49, EIC0_INT10, SPI1_-DATA1, CAN2_RX, ICU2_IN1, ARH0_A-IC1_RDA1, UDC0_BIN1, ADC0_AN24
PPC_PCF-GR050 (0x0064)	P0_50	GPIO0_50	SPI1_-DATA0	SPI0_SSO3	SPI0_-DATA3	PPG2_PPGB	OCU1_OTD0	RLT1_TOT	PPG66_PPGA	GPIO0_50, EIC0_INT10, EIC0_INT09, SPI0_-DATA3, SPI1_DATA0, CAN2_RX, CAN1_RX, ICU3_IN0, ARH0_A-IC1_RDA0, UDC0_ZIN1, ADC0_AN25
PPC_PCF-GR051 (0x0066)	P0_51	GPIO0_51	SPI1_CLK	UDC0_UDOT1	CAN2_TX	PPG3_PPGB	OCU1_OTD1	ARH0_A-IC1_TDA0	PPG67_PPGA	GPIO0_51, EIC0_INT08, SPI1_CLK, CAN0_RX, ICU3_IN1, RLT1_TIN, ADC0_EDGI
PPC_PCF-GR062 (0x007C)	P0_62	GPIO0_62	I2C0_SCL							GPIO0_62, EIC0_INT24, I2C0_SCL
PPC_PCF-GR063 (0x007E)	P0_63	GPIO0_63	I2C0_SDA							GPIO0_63, EIC0_INT00, I2C0_SDA
PPC_PCF-GR100 (0x0080)	P1_00	GPIO1_00	SMC0_M2	ARH0_A-IC0_DNCLK		PPG64_PPGB			PPG0_PPGA	GPIO1_00, CAN0_RX, EIC0_INT08, EIC0_INT25, ARH0_AIC0_TCKI, ADC0_AN26
PPC_PCF-GR101 (0x0082)	P1_01	GPIO1_01	SMC0_P2			PPG65_PPGB	CAN0_TX		PPG1_PPGA	GPIO1_01, EIC0_INT26, ARH0_AIC0_UPCLK, ARH0_AIC0_RCK, ADC0_AN26

Table 18. Port Pin Multiplexing (Continued)

Register (Offset)	Port	Resource functional output								Possible Resource Function Input
		POF=0	POF=1	POF=2	POF=3	POF=4	POF=5	POF=6	POF=7	
PPC_PCF-GR102 (0x0084)	P1_02	GPIO1_02	SMC0_M1			PPG66_PPGB			PPG2_PPGA	GPIO1_02, EIC0_INT13, CAN1_RX, EIC0_INT09, ARH0_AIC0_UP-DATA1, ARH0_AIC0_RDA1, ADC0_AN26
PPC_PCF-GR103 (0x0086)	P1_03	GPIO1_03	SMC0_P1			PPG67_PPGB	CAN1_TX		PPG3_PPGA	GPIO1_03, EIC0_INT27, ARH0_AIC0_UP-DATA0, ARH0_AIC0_RDA0, ADC0_AN26
PPC_PCF-GR104 (0x0088)	P1_04	GPIO1_04	SMC1_M2	ARH0_A-IC0_DN-DATA1	ARH0_A-IC0_TDA1	PPG68_PPGB			PPG4_PPGA	GPIO1_04, EIC0_INT28, ADC0_AN27
PPC_PCF-GR105 (0x008A)	P1_05	GPIO1_05	SMC1_P2	ARH0_A-IC0_DN-DATA0	ARH0_A-IC0_TDA0	PPG69_PPGB			PPG5_PPGA	GPIO1_05, EIC0_INT29, ADC0_AN27
PPC_PCF-GR106 (0x008C)	P1_06	GPIO1_06	SMC1_M1	ARH0_A-IC1_DN-DATA1	ARH0_A-IC1_TDA1	PPG70_PPGB			PPG6_PPGA	GPIO1_06, EIC0_INT30, ADC0_AN27
PPC_PCF-GR107 (0x008E)	P1_07	GPIO1_07	SMC1_P1	ARH0_A-IC1_DN-DATA0	ARH0_A-IC1_TDA0	PPG71_PPGB			PPG7_PPGA	GPIO1_07, EIC0_INT31, ADC0_AN27
PPC_PCF-GR108 (0x0090)	P1_08	GPIO1_08	SMC2_M2		ARH0_A-IC0_db-g_out_0	PPG0_PPGB	SPI0_SS		PPG8_PPGA	GPIO1_08, USART0_SIN, RLT3_TIN, EIC0_INT00, SPI0_SS, ADC0_AN28, EIC0_INT03, EIC0_INT11
PPC_PCF-GR109 (0x0092)	P1_09	GPIO1_09	SMC2_P2		ARH0_A-IC0_db-g_out_1	PPG1_PPGB	SPI0_DATA1	USART0_SCK	PPG9_PPGA	GPIO1_09, USART0_SCK, RLT4_TIN, EIC0_INT01, SPI0_DATA1, ICU2_IN1, ADC0_AN28
PPC_PCF-GR110 (0x0094)	P1_10	GPIO1_10	SMC2_M1			PPG2_PPGB	SPI0_DATA0	USART0_SOT	PPG10_PPGA	GPIO1_10, EIC0_INT02, ARH0_AIC0_db-g_select, SPI0_DATA0, ICU2_IN0, ADC0_AN28
PPC_PCF-GR111 (0x0096)	P1_11	GPIO1_11	SMC2_P1			PPG3_PPGB	SPI0_CLK		PPG11_PPGA	GPIO1_11, EIC0_INT03, SPI0_CLK, RLT0_TIN, ADC0_AN28
PPC_PCF-GR112 (0x0098)	P1_12	GPIO1_12	SMC3_M2		ARH0_A-IC1_db-g_out_0	PPG4_PPGB	SPI1_SS		PPG12_PPGA	GPIO1_12, USART6_SIN, RLT5_TIN, EIC0_INT04, SPI1_SS, ADC0_AN29, EIC0_INT12
PPC_PCF-GR113 (0x009A)	P1_13	GPIO1_13	SMC3_P2		ARH0_A-IC1_db-g_out_1	PPG5_PPGB	SPI1_DATA1	USART6_SCK	PPG13_PPGA	GPIO1_13, USART6_SCK, RLT6_TIN, EIC0_INT05, SPI1_DATA1, ICU18_IN0, ADC0_AN29

Table 18. Port Pin Multiplexing (Continued)

Register (Offset)	Port	Resource functional output								Possible Resource Function Input
		POF=0	POF=1	POF=2	POF=3	POF=4	POF=5	POF=6	POF=7	
PPC_PCF-GR114 (0x009C)	P1_14	GPIO1_14	SMC3_M1			PPG6_PPGB	SPI1_DATA0	USART6_SOT	PPG14_PPGA	GPIO1_14, EIC0_INT06, ARH0_AIC1_db-g_select, SPI1_DATA0, ICU19_IN1, ADC0_AN29
PPC_PCF-GR115 (0x009E)	P1_15	GPIO1_15	SMC3_P1			PPG7_PPGB	SPI1_CLK		PPG15_PPGA	GPIO1_15, EIC0_INT07, SPI1_CLK, RLT1_TIN, ADC0_AN29
PPC_PCF-GR116 (0x00A0)	P1_16	GPIO1_16	SMC4_M2			PPG8_PPGB	SPI2_SS	SPI1_SSO2	PPG64_PPGA	GPIO1_16, CAN2_RX, EIC0_INT10, EIC0_INT13, SPI2_SS, ADC0_AN30, EIC0_INT05
PPC_PCF-GR117 (0x00A2)	P1_17	GPIO1_17	SMC4_P2		CAN2_TX	PPG9_PPGB	SPI2_DATA1	SPI1_SSO1	PPG65_PPGA	GPIO1_17, EIC0_INT14, SPI2_DATA1, ADC0_AN30
PPC_PCF-GR118 (0x00A4)	P1_18	GPIO1_18	SMC4_M1	SG0_SGA	DMA0_DREQ_ACK1	PPG10_PPGB	SPI2_DATA0	SPI1_SSO3	PPG66_PPGA	GPIO1_18, EIC0_INT15, SPI2_DATA0, ICU18_IN0, ADC0_AN30
PPC_PCF-GR119 (0x00A6)	P1_19	GPIO1_19	SMC4_P1	SG0_SGO	DMA0_D-STP_ACK1	PPG11_PPGB	SPI2_CLK		PPG67_PPGA	GPIO1_19, EIC0_INT16, SPI2_CLK, ICU19_IN1, RLT2_TIN, ADC0_AN30
PPC_PCF-GR120 (0x00A8)	P1_20	GPIO1_20	SMC5_M2	ARH0_A-IC1_DNCLK	DMA0_DEOP1	PPG12_PPGB			PPG68_PPGA	GPIO1_20, EIC0_INT17, ARH0_AIC1_TCKI, ADC0_AN31
PPC_PCF-GR121 (0x00AA)	P1_21	GPIO1_21	SMC5_P2			PPG13_PPGB			PPG69_PPGA	GPIO1_21, EIC0_INT18, ARH0_AIC1_UPCLK, DMA0_DREQ1, ARH0_AIC1_RCK, ADC0_AN31
PPC_PCF-GR122 (0x00AC)	P1_22	GPIO1_22	SMC5_M1			PPG14_PPGB			PPG70_PPGA	GPIO1_22, EIC0_INT19, ARH0_AIC1_UP-DATA1, DMA0_DSTP1, ARH0_AIC1_RDA1, ADC0_AN31
PPC_PCF-GR123 (0x00AE)	P1_23	GPIO1_23	SMC5_P1			PPG15_PPGB			PPG71_PPGA	GPIO1_23, EIC0_INT20, ARH0_AIC1_UP-DATA0, DMA0_DEOP_ACK1, ARH0_AIC1_RDA0, ADC0_AN31
PPC_PCF-GR124 (0x00B0)	P1_24	GPIO1_24	DBG0_TRACE6	DMA0_DREQ_ACK0	ARH0_A-IC1_DNCLK	PPG5_PPGB	OCU16_OTD1	EBI0_MAD13	PPG69_PPGA	GPIO1_24, EIC0_INT19, I2S0_ECLK, I2S1_ECLK, ARH0_AIC1_TCKI, ICU18_IN1
PPC_PCF-GR125 (0x00B2)	P1_25	GPIO1_25	DBG0_TRACE7	DMA0_DST-P_ACK0	I2S1_SD	PPG6_PPGB	OCU17_OTD0	EBI0_MAD14	PPG70_PPGA	GPIO1_25, EIC0_INT20, I2S1_SD, ARH0_AIC1_RCK, ICU19_IN0, ARH0_AIC1_UPCLK

Table 18. Port Pin Multiplexing (Continued)

Register (Offset)	Port	Resource functional output								Possible Resource Function Input
		POF=0	POF=1	POF=2	POF=3	POF=4	POF=5	POF=6	POF=7	
PPC_PCF-GR126 (0x00B4)	P1_26	GPIO1_26	DBG0_TRACE0	DMA0_DEOP0	I2S1_WS	PPG7_PPGB	OCU17_OTD1		PPG71_PPGA	GPIO1_26, EIC0_INT07, I2S1_WS, ARH0_AIC1_RDA1, ICU19_IN1, ARH0_AIC1_UP-DATA1
PPC_PCF-GR127 (0x00B6)	P1_27	GPIO1_27	DBG0_TRACE1		I2S1_SCK					GPIO1_27, EIC0_INT21, DMA0_DREQ0, I2S1_SCK, ARH0_AIC1_RDA0, ARH0_AIC1_UP-DATA0
PPC_PCF-GR128 (0x00B8)	P1_28	GPIO1_28	DBG0_CTL	ARH0_A-IC1_TDA1			ARH0_AIC1_DN-DATA1	RLT3_TOT		GPIO1_28, EIC0_INT22, DMA0_DSTP0
PPC_PCF-GR129 (0x00BA)	P1_29	GPIO1_29	DBG0_CLK	ARH0_A-IC1_TDA0			ARH0_AIC1_DN-DATA0	RLT4_TOT		GPIO1_29, EIC0_INT23, DMA0_DEOP_ACK0
PPC_PCF-GR130 (0x00BC)	P1_30	GPIO1_30	HSSPI0_SSO3	OCU0_OTD0		DBG0_TRACE2			EBI0_-MAD15	GPIO1_30, EIC0_INT11, PPG_ETRG2, USART0_SIN, RLT3_TIN, ADC0_EDGI
PPC_PCF-GR131 (0x00BE)	P1_31	GPIO1_31	HSSPI0_SSO2	OCU0_OTD1	USART0_SCK	DBG0_TRACE3			EBI0_-MAD16	GPIO1_31, EIC0_INT24, USART0_SCK, ICU3_IN1, RLT4_TIN
PPC_PCF-GR132 (0x00C0)	P1_32	GPIO1_32	HSSPI0_SSO1	OCU1_OTD0	USART0_SOT	DBG0_TRACE4			EBI0_-MAD17	GPIO1_32, EIC0_INT25, ICU3_IN0
PPC_PCF-GR133 (0x00C2)	P1_33	GPIO1_33	HSSPI0_SS	OCU1_OTD1	CAN0_TX	DBG0_TRACE5			EBI0_-MAD18	GPIO1_33, EIC0_INT01, HSSPI0_SS
PPC_PCF-GR134 (0x00C4)	P1_34	GPIO1_34	HSSPI0_-DATA3						EBI0_-MAD19	GPIO1_34, EIC0_INT08, HSSPI0_DATA3, CAN0_RX, UDC0_AIN0
PPC_PCF-GR135 (0x00C6)	P1_35	GPIO1_35	HSSPI0_-DATA2		CAN1_TX		ARH0_AIC0_db-g_out_0		EBI0_-MAD20	GPIO1_35, EIC0_INT26, HSSPI0_DATA2, ICU2_IN0, UDC0_BIN0
PPC_PCF-GR136 (0x00C8)	P1_36	GPIO1_36	HSSPI0_-DATA1				ARH0_AIC0_db-g_out_1		EBI0_-MAD21	GPIO1_36, EIC0_INT09, HSSPI0_DATA1, CAN1_RX, ICU2_IN1, UDC0_ZIN0
PPC_PCF-GR137 (0x00CA)	P1_37	GPIO1_37	HSSPI0_-DATA0	UDC0_UDOT0	CAN2_TX			RLT5_TOT	EBI0_-MAD22	GPIO1_37, EIC0_INT13, HSSPI0_DATA0, ARH0_AIC0_db-g_select, ICU3_IN0
PPC_PCF-GR138 (0x00CC)	P1_38	GPIO1_38	HSSPI0_CLK					RLT6_TOT	EBI0_-MAD23	GPIO1_38, EIC0_INT10, HSSPI0_CLK, CAN2_RX, ICU3_IN1

Table 18. Port Pin Multiplexing (Continued)

Register (Offset)	Port	Resource functional output								Possible Resource Function Input
		POF=0	POF=1	POF=2	POF=3	POF=4	POF=5	POF=6	POF=7	
PPC_PCF-GR232 (0x0140)	P2_32	GPIO2_32	SPI2_SS	UDC0_UDOT0	SPI1_-DATA2	PPG8_PPGB	OCU0_OTD0	RLT9_TOT	PPG0_PPGA	GPIO2_32, I2S0_ECLK, I2S1_ECLK, SPI1_DATA2, ARH0_AIC0_RCK, SPI2_SS, SPI0_SS, ICU2_IN0, ARH0_AIC0_UPCLK, EIC0_INT05, EIC0_INT03, ADC0_EDGI
PPC_PCF-GR233 (0x0142)	P2_33	GPIO2_33	SPI2_-DATA1	I2S0_SD	SPI1_-DATA3	PPG9_PPGB	OCU0_OTD1	RLT8_TOT	PPG1_PPGA	GPIO2_33, I2S0_SD, I2S1_SD, SPI1_DATA3, UDC0_AIN0, ARH0_AIC0_RDA1, SPI2_DATA1, SPI0_DATA1, ICU2_IN1, ARH0_AIC0_UP-DATA1, EIC0_INT26, ADC0_AN0
PPC_PCF-GR234 (0x0144)	P2_34	GPIO2_34	SPI2_-DATA0	I2S0_WS		PPG10_PPGB	OCU1_OTD0	RLT7_TOT	PPG2_PPGA	GPIO2_34, I2S0_WS, I2S1_WS, UDC0_BIN0, ARH0_AIC0_RDA0, SPI2_DATA0, SPI0_DATA0, ICU3_IN0, ARH0_AIC0_UP-DATA0, EIC0_INT06, EIC0_INT07, ADC0_AN1
PPC_PCF-GR235 (0x0146)	P2_35	GPIO2_35	SPI2_CLK	I2S0_SCK		PPG11_PPGB	OCU1_OTD1	ARH0_A-IC0_DNCLK	PPG3_PPGA	GPIO2_35, I2S0_SCK, I2S1_SCK, UDC0_ZIN0, ARH0_AIC0_TCKI, SPI2_CLK, SPI0_CLK, RLT2_TIN, ICU3_IN1, EIC0_INT29, ADC0_AN2
PPC_PCF-GR236 (0x0148)	P2_36	GPIO2_36	SPI1_SS	UDC0_UDOT1	ARH0_A-IC0_TDA1	PPG12_PPGB	OCU16_OTD0	ARH0_A-IC0_DNDATA1	PPG4_PPGA	GPIO2_36, I2S1_ECLK, I2S0_ECLK, SPI1_SS, SPI2_SS, RLT9_TIN, ICU18_IN0, EIC0_INT04, EIC0_INT05, ADC0_AN3
PPC_PCF-GR237 (0x014A)	P2_37	GPIO2_37	SPI1_-DATA1	I2S1_SD	ARH0_A-IC0_TDA0	PPG13_PPGB	OCU16_OTD1	ARH0_A-IC0_DNDATA0	PPG5_PPGA	GPIO2_37, I2S1_SD, I2S0_SD, UDC0_AIN1, SPI1_DATA1, SPI2_DATA1, RLT8_TIN, ICU18_IN1, EIC0_INT30, ADC0_AN4

Table 18. Port Pin Multiplexing (Continued)

Register (Offset)	Port	Resource functional output								Possible Resource Function Input
		POF=0	POF=1	POF=2	POF=3	POF=4	POF=5	POF=6	POF=7	
PPC_PCF-GR238 (0x014C)	P2_38	GPIO2_38	SPI1_-DATA0	I2S1_WS		PPG14_PPGB	OCU17_OTD0		PPG6_PPGA	GPIO2_38, I2S1_WS, I2S0_WS, PPG_ETRG0, UDC0_BIN1, SPI1_DATA0, SPI2_DATA0, RLT7_TIN, ICU19_IN0, EIC0_INT06, EIC0_INT07, ADC0_AN5
PPC_PCF-GR239 (0x014E)	P2_39	GPIO2_39	SPI1_CLK	I2S1_SCK		PPG15_PPGB	OCU17_OTD1		PPG7_PPGA	GPIO2_39, I2S1_SCK, I2S0_SCK, PPG_ETRG1, UDC0_ZIN1, SPI1_CLK, SPI2_CLK, RLT1_TIN, ICU19_IN1, EIC0_INT31, ADC0_AN6
PPC_PCF-GR240 (0x0150)	P2_40	GPIO2_40	SPI0_SS	CAN0_TX		PPG64_PPGB	OCU0_OTD1_I	RLT8_TOT	PPG8_PPGA	GPIO2_40, I2S0_ECLK, CAN2_RX, ARH0_AIC1_RCK, SPI0_SS, SPI1_SS, ICU2_IN0, FRT16_FRCK, ARH0_AIC1_UPCLK, EIC0_INT03, EIC0_INT04, EIC0_INT10, ADC0_AN7
PPC_PCF-GR241 (0x0152)	P2_41	GPIO2_41	SPI0_-DATA1	I2S0_SD		PPG65_PPGB	OCU0_OTD0_I	RLT9_TOT	PPG9_PPGA	GPIO2_41, I2S0_SD, CAN0_RX, CAN1_RX, ARH0_AIC1_RDA1, SPI0_DATA1, SPI1_DATA1, RLT8_TIN, ICU2_IN1, FRT17_FRCK, ARH0_AIC1_UP-DATA1, EIC0_INT08, EIC0_INT09, ADC0_AN8
PPC_PCF-GR242 (0x0154)	P2_42	GPIO2_42	SPI0_-DATA0	I2S0_WS	SG0_SGA	PPG66_PPGB	OCU0_OTD1_GI		PPG10_PPGA	GPIO2_42, I2S0_WS, ARH0_AIC1_RDA0, SPI0_DATA0, SPI1_DATA0, RLT9_TIN, ICU3_IN0, FRT18_FRCK, ARH0_AIC1_UP-DATA0, EIC0_INT06, ADC0_AN9
PPC_PCF-GR243 (0x0156)	P2_43	GPIO2_43	SPI0_CLK	I2S0_SCK	SG0_SGO	PPG67_PPGB	OCU0_OTD0_GI	ARH0_A-IC1_DNCLK	PPG11_PPGA	GPIO2_43, I2S0_SCK, EIC0_NMI, ARH0_AIC1_TCKI, SPI0_CLK, SPI1_CLK, RLT0_TIN, ICU3_IN1, FRT19_FRCK, ADC0_AN10

Table 18. Port Pin Multiplexing (Continued)

Register (Offset)	Port	Resource functional output								Possible Resource Function Input
		POF=0	POF=1	POF=2	POF=3	POF=4	POF=5	POF=6	POF=7	
PPC_PCF-GR244 (0x0158)	P2_44	GPIO2_44	ARH0_A-IC1_DN-DATA1	CAN1_TX	ARH0_A-IC1_TDA1	PPG68_PPGB	OCU16_OTD1_I	RLT7_TOT	PPG12_PPGA	GPIO2_44, I2S1_ECLK, CAN0_RX, ICU18_IN0, FRT0_FRCK, EIC0_INT08, ADC0_AN11
PPC_PCF-GR245 (0x015A)	P2_45	GPIO2_45	ARH0_A-IC1_DN-DATA0	I2S1_SD	ARH0_A-IC1_TDA0	PPG69_PPGB	OCU16_OTD0_I		PPG13_PPGA	GPIO2_45, I2S1_SD, CAN1_RX, CAN2_RX, FRT0_FRCK, RLT7_TIN, ICU18_IN1, FRT1_FRCK, FRT2_FRCK, FRT3_FRCK, EIC0_INT09, EIC0_INT10, ADC0_AN12
PPC_PCF-GR246 (0x015C)	P2_46	GPIO2_46		I2S1_WS	SG0_SGA	PPG70_PPGB	OCU16_OTD1_GI	RLT5_TOT	PPG14_PPGA	GPIO2_46, I2S1_WS, CAN2_RX, CAN0_RX, ICU19_IN0, FRT2_FRCK, EIC0_INT07, EIC0_INT10, EIC0_INT08, ADC0_AN13
PPC_PCF-GR247 (0x015E)	P2_47	GPIO2_47	CAN2_TX	I2S1_SCK	SG0_SGO	PPG71_PPGB	OCU16_OTD0_GI	RLT6_TOT	PPG15_PPGA	GPIO2_47, I2S1_SCK, FRT2_FRCK, CAN1_RX, FRT16_FRCK, FRT17_FRCK, FRT18_FRCK, ICU19_IN1, FRT3_FRCK, FRT19_FRCK, FRT0_FRCK, FRT1_FRCK, EIC0_INT09, ADC0_AN14
PPC_PCF-GR300 (0x0180)	P3_00	GPIO3_00		OCU16_OTD0					EBI0_-MAD00	GPIO3_00, EIC0_INT12, EIC0_INT11, USART6_SIN, RLT5_TIN, USART0_SIN
PPC_PCF-GR301 (0x0182)	P3_01	GPIO3_01	USART6_SCK	OCU16_OTD1					EBI0_-MAD01	GPIO3_01, EIC0_INT27, PPG_ETRG3, USART6_SCK, ICU3_IN1, RLT6_TIN, ADC0_EDGI, USART0_SCK
PPC_PCF-GR302 (0x0184)	P3_02	GPIO3_02	USART6_SOT	OCU17_OTD0				RLT3_TOT	EBI0_-MAD02	GPIO3_02, EIC0_INT11, EIC0_INT28, ICU3_IN0, USART0_SIN
PPC_PCF-GR303 (0x0186)	P3_03	GPIO3_03		OCU17_OTD1	PPG6_PPGA	PPG70_PPGB		RLT4_TOT	EBI0_-MAD03	GPIO3_03, EIC0_INT02
PPC_PCF-GR304 (0x0188)	P3_04	GPIO3_04			PPG7_PPGA	PPG71_PPGB			EBI0_-MAD04	GPIO3_04, EIC0_INT11, EIC0_INT12, USART0_SIN, ICU18_IN0, RLT3_TIN, UDC0_AIN1, USART6_SIN

Table 18. Port Pin Multiplexing (Continued)

Register (Offset)	Port	Resource functional output								Possible Resource Function Input
		POF=0	POF=1	POF=2	POF=3	POF=4	POF=5	POF=6	POF=7	
PPC_PCF-GR305 (0x018A)	P3_05	GPIO3_05	USART0_SCK		PPG8_PPGA	PPG0_PPGB	ARH0_AIC1_dbg_out_0		EBI0_MAD05	GPIO3_05, EIC0_INT29, USART0_SCK, ICU18_IN1, RLT4_TIN, UDC0_BIN1, USART6_SCK
PPC_PCF-GR306 (0x018C)	P3_06	GPIO3_06	USART0_SOT		PPG9_PPGA	PPG1_PPGB	ARH0_AIC1_dbg_out_1		EBI0_MAD06	GPIO3_06, EIC0_INT12, EIC0_INT30, ICU19_IN0, UDC0_ZIN1, USART6_SIN
PPC_PCF-GR307 (0x018E)	P3_07	GPIO3_07		UDC0_UDOT1	PPG10_PPGA	PPG2_PPGB			EBI0_MAD07	GPIO3_07, EIC0_INT31, ARH0_AIC1_dbg_select, ICU19_IN1
PPC_PCF-GR308 (0x0190)	P3_08	GPIO3_08	SPI0_SSO3		PPG11_PPGA	PPG3_PPGB			EBI0_MAD08	GPIO3_08, EIC0_INT00
PPC_PCF-GR309 (0x0192)	P3_09	GPIO3_09	SPI2_SS	OCU0_OTD1_I	PPG12_PPGA	PPG4_PPGB			EBI0_MAD09	GPIO3_09, SPI2_SS, EIC0_INT05
PPC_PCF-GR310 (0x0194)	P3_10	GPIO3_10	SPI2_DATA1	OCU0_OTD0_I	PPG13_PPGA	PPG5_PPGB			EBI0_MAD10	GPIO3_10, EIC0_INT02, SPI2_DATA1
PPC_PCF-GR311 (0x0196)	P3_11	GPIO3_11	SPI2_DATA0	OCU0_OTD1_GI	PPG14_PPGA	PPG6_PPGB			EBI0_MAD11	GPIO3_11, EIC0_INT14, SPI2_DATA0
PPC_PCF-GR312 (0x0198)	P3_12	GPIO3_12	SPI2_CLK	OCU0_OTD0_GI	PPG15_PPGA	PPG7_PPGB			EBI0_MAD12	GPIO3_12, EIC0_INT15, SPI2_CLK, RLT2_TIN
PPC_PCF-GR313 (0x019A)	P3_13	GPIO3_13	SPI2_DATA2	UDC0_UDOT0	PPG64_PPGA	PPG8_PPGB		EBI0_MCSX8	EBI0_MCSX0	GPIO3_13, EIC0_INT16, SPI2_DATA2, ICU2_IN0
PPC_PCF-GR314 (0x019C)	P3_14	GPIO3_14	SPI2_DATA3		PPG65_PPGA	PPG9_PPGB			EBI0_MCSX1	GPIO3_14, EIC0_INT17, SPI2_DATA3, ICU2_IN1, UDC0_AIN0
PPC_PCF-GR315 (0x019E)	P3_15	GPIO3_15	SPI0_SSO1		PPG66_PPGA	PPG10_PPGB		EBI0_MDQM1	EBI0_MCSX2	GPIO3_15, EIC0_INT18, ICU3_IN0, ARH0_AIC1_RCK, UDC0_BIN0, ARH0_AIC1_UPCLK
PPC_PCF-GR316 (0x01A0)	P3_16	GPIO3_16	SPI0_SSO2		PPG67_PPGA	PPG11_PPGB			EBI0_MCSX3	GPIO3_16, EIC0_INT19, ICU3_IN1, ARH0_AIC1_RDA1, UDC0_ZIN0, ARH0_AIC1_UP-DATA1
PPC_PCF-GR317 (0x01A2)	P3_17	GPIO3_17	SPI2_SSO2	UDC0_UDOT1	PPG68_PPGA	PPG12_PPGB			EBI0_M-DATA00	GPIO3_17, EBI0_MDATA00, EIC0_INT20, ICU18_IN0, ARH0_AIC1_RDA0, ARH0_AIC1_UP-DATA0
PPC_PCF-GR318 (0x01A4)	P3_18	GPIO3_18	SPI2_SSO1		PPG69_PPGA	PPG13_PPGB		ARH0_A-IC1_DNCLK	EBI0_M-DATA01	GPIO3_18, EBI0_MDATA01, EIC0_INT21, ICU18_IN1, ARH0_AIC1_TCKI, UDC0_AIN1

Table 18. Port Pin Multiplexing (Continued)

Register (Offset)	Port	Resource functional output								Possible Resource Function Input
		POF=0	POF=1	POF=2	POF=3	POF=4	POF=5	POF=6	POF=7	
PPC_PCF-GR319 (0x01A6)	P3_19	GPIO3_19	SPI1_-DATA2		PPG70_PPGA	PPG14_PPGB	ARH0_AIC1_TDA1	ARH0_A-IC1_DNDATA1	EBI0_M-DATA02	GPIO3_19, EBI0_MDATA02, EIC0_INT22, SPI1_DATA2, I CU19_IN0, UDC0_BIN1
PPC_PCF-GR320 (0x01A8)	P3_20	GPIO3_20	SPI1_-DATA3		PPG71_PPGA	PPG15_PPGB	ARH0_AIC1_TDA0	ARH0_A-IC1_DNDATA0	EBI0_M-DATA03	GPIO3_20, EBI0_MDATA03, EIC0_INT23, SPI1_DATA3, ICU19_IN1, UDC0_ZIN1
PPC_PCF-GR321 (0x01AA)	P3_21	GPIO3_21	SPI1_SS	OCU17_OTD0					EBI0_M-DATA04	GPIO3_21, EBI0_MDATA04, SPI1_SS, EIC0_INT04
PPC_PCF-GR322 (0x01AC)	P3_22	GPIO3_22	SPI1_-DATA1	OCU17_OTD1					EBI0_M-DATA05	GPIO3_22, EBI0_MDATA05, EIC0_INT20, SPI1_DATA1
PPC_PCF-GR323 (0x01AE)	P3_23	GPIO3_23	SPI1_-DATA0					RLT0_TOT	EBI0_M-DATA06	GPIO3_23, EBI0_MDATA06, EIC0_INT21, SPI1_DATA0
PPC_PCF-GR324 (0x01B0)	P3_24	GPIO3_24	SPI1_CLK						EBI0_M-DATA07	GPIO3_24, EBI0_MDATA07, EIC0_INT22, SPI1_CLK, RLT1_TIN
PPC_PCF-GR325 (0x01B2)	P3_25	GPIO3_25	SPI0_SS	OCU0_OTD0	PPG64_PPGB	PPG0_PPGA		RLT1_TOT	EBI0_M-DATA08	GPIO3_25, EBI0_MDATA08, SPI0_SS, ARH0_AIC0_RCK, ARH0_AIC0_UPCLK, EIC0_INT03
PPC_PCF-GR326 (0x01B4)	P3_26	GPIO3_26	SPI0_-DATA1	OCU0_OTD1	PPG65_PPGB	PPG1_PPGA		RLT2_TOT	EBI0_M-DATA09	GPIO3_26, EBI0_MDATA09, EIC0_INT24, SPI0_DATA1, ARH0_AIC0_RDA1, ARH0_AIC0_UP-DATA1
PPC_PCF-GR327 (0x01B6)	P3_27	GPIO3_27	SPI0_-DATA0	OCU1_OTD0	PPG66_PPGB	PPG2_PPGA		RLT5_TOT	EBI0_M-DATA10	GPIO3_27, EBI0_MDATA10, EIC0_INT25, SPI0_DATA0, ARH0_AIC0_RDA0, ARH0_AIC0_UP-DATA0
PPC_PCF-GR328 (0x01B8)	P3_28	GPIO3_28	SPI0_CLK	OCU1_OTD1	PPG67_PPGB	PPG3_PPGA		ARH0_A-IC0_DNCLK	EBI0_M-DATA11	GPIO3_28, EBI0_MDATA11, EIC0_INT26, SPI0_CLK, ARH0_AIC0_TCKI, RLT0_TIN
PPC_PCF-GR329 (0x01BA)	P3_29	GPIO3_29	SPI0_-DATA2	OCU16_OTD0	PPG68_PPGB	PPG4_PPGA	ARH0_AIC0_TDA1	ARH0_A-IC0_DNDATA1	EBI0_M-DATA12	GPIO3_29, EBI0_MDATA12, EIC0_INT27, SPI0_DATA2
PPC_PCF-GR330 (0x01BC)	P3_30	GPIO3_30	SPI0_-DATA3	OCU16_OTD1	PPG69_PPGB	PPG5_PPGA	ARH0_AIC0_TDA0	ARH0_A-IC0_DNDATA0	EBI0_M-DATA13	GPIO3_30, EBI0_MDATA13, EIC0_INT28, SPI0_DATA3, RLT5_TIN
PPC_PCF-GR331 (0x01BE)	P3_31	GPIO3_31	SPI1_SSO1	OCU1_OTD1_I			SG0_SGO		EBI0_M-DATA14	GPIO3_31, EBI0_MDATA14, EIC0_INT27, ICU19_IN0
PPC_PCF-GR332 (0x01C0)	P3_32	GPIO3_32	SPI1_SSO2	OCU1_OTD0_I			SG0_SGA		EBI0_M-DATA15	GPIO3_32, EBI0_MDATA15, EIC0_INT28, ICU19_IN1

Table 18. Port Pin Multiplexing (Continued)

Register (Offset)	Port	Resource functional output								Possible Resource Function Input
		POF=0	POF=1	POF=2	POF=3	POF=4	POF=5	POF=6	POF=7	
PPC_PCF-GR333 (0x01C2)	P3_33	GPIO3_33		OCU1_OTD1_GI	UDC0_UDOT0		EBI0_MAD18	EBI0_MNALE	EBI0_MCASX	GPIO3_33, I2S0_ECLK, EIC0_INT01
PPC_PCF-GR334 (0x01C4)	P3_34	GPIO3_34		OCU1_OTD0_GI	I2S0_SD		EBI0_MAD19	EBI0_MNCLE	EBI0_MRASX	GPIO3_34, I2S0_SD, EIC0_INT14, UDC0_AIN0
PPC_PCF-GR335 (0x01C6)	P3_35	GPIO3_35		OCU16_OTD1_I	I2S0_WS		EBI0_MAD20	EBI0_MNWEX	EBI0_MDWEX	GPIO3_35, I2S0_WS, UDC0_BIN0, EIC0_INT06
PPC_PCF-GR336 (0x01C8)	P3_36	GPIO3_36		OCU16_OTD0_I	I2S0_SCK		EBI0_MAD21	EBI0_MNREX	EBI0_MCKE	GPIO3_36, I2S0_SCK, EIC0_INT18, UDC0_ZIN0
PPC_PCF-GR337 (0x01CA)	P3_37	GPIO3_37		OCU16_OTD1_GI	UDC0_UDOT1		EBI0_MAD18	EBI0_MCASX	EBI0_MDQM0	GPIO3_37, I2S1_ECLK, EIC0_INT19
PPC_PCF-GR338 (0x01CC)	P3_38	GPIO3_38		OCU16_OTD0_GI	I2S1_SD		EBI0_MAD19	EBI0_MRASX	EBI0_MDQM1	GPIO3_38, I2S1_SD, EIC0_INT23, UDC0_AIN1
PPC_PCF-GR339 (0x01CE)	P3_39	GPIO3_39		OCU17_OTD1_I	I2S1_WS		EBI0_MAD20	EBI0_MDWEX	EBI0_MWEX	GPIO3_39, I2S1_WS, UDC0_BIN1, EIC0_INT07
PPC_PCF-GR340 (0x01D0)	P3_40	GPIO3_40		OCU17_OTD0_I	I2S1_SCK		EBI0_MAD21	EBI0_MCKE	EBI0_MOEX	GPIO3_40, I2S1_SCK, EIC0_INT29, UDC0_ZIN1
PPC_PCF-GR341 (0x01D2)	P3_41	GPIO3_41	SPI1_SSO3	OCU17_OTD1_GI					EBI0_MCLK	GPIO3_41, EIC0_INT30, ADC0_EDGI
PPC_PCF-GR342 (0x01D4)	P3_42	GPIO3_42	SPI2_SSO3	OCU17_OTD0_GI			EBI0_MAD22	EBI0_MDQM0		GPIO3_42, EBI0_RDY, EIC0_INT31

Resource Input Source Table

RICFG0_ADC

Table 19. Resource Input Source Table for ADC Configurations

Register (Offset)	Resource Input	Register Field	Source for Resource Input							
			Bit 0	Bit 1	Bit 2	Bit 3	Bit 4	Bit 5	Bit 6	Bit 7
ADC0EDGI (0x000C)	ADC0_EDGI	ADC0EDGIL	PORTPIN	OCU	-	-	-	-	-	-
			Ports selected by ADC0EDG-I_PORTSEL register.	All the signals that are enabled by the ADC0EDGIOCUn registers ANDed together. If they are not enabled, they are masked to '1'.	reserved	reserved	reserved	reserved	reserved	reserved
		ADC0EDGIH	PORT-SEL[3:0]		-	-	-	-	-	-
			0010: P1_30 is selected 0100: P0_51 is selected 0101: P2_32 is selected 0110: P3_01 is selected 0111: P3_41 is selected		reserved	reserved	reserved	reserved	reserved	reserved
ADC0EDG-IOCU0 (0x000E)	ADC0_EDGI	ADC0EDG-IOCU0L	OCU00	OCU01	OCU10	OCU11	-	-	-	-
			0: OCU0_OTD0 is disabled 1: OCU0_OTD0 is enabled	0: OCU0_OTD1 is disabled 1: OCU0_OTD1 is enabled	0: OCU1_OTD0 is disabled 1: OCU1_OTD0 is enabled	0: OCU1_OTD1 is disabled 1: OCU1_OTD1 is enabled	reserved	reserved	reserved	reserved
		-	-	-	-	-	-	-	-	-
			-	-	-	-	-	-	-	-
ADC0EDG-IOCU1 (0x0010)	ADC0_EDGI	-	-	-	-	-	-	-	-	-
			-	-	-	-	-	-	-	-
		-	-	-	-	-	-	-	-	-
			-	-	-	-	-	-	-	-
ADC0EDG-IOCU2 (0x0012)	ADC0_EDGI	-	-	-	-	-	-	-	-	-
			-	-	-	-	-	-	-	-
		-	-	-	-	-	-	-	-	-
			-	-	-	-	-	-	-	-
ADC0EDG-IOCU3 (0x0014)	ADC0_EDGI	-	-	-	-	-	-	-	-	-
			-	-	-	-	-	-	-	-
		-	-	-	-	-	-	-	-	-
			-	-	-	-	-	-	-	-
ADC0EDG-IOCU4 (0x0016)	ADC0_EDGI	ADC0EDG-IOCU4L	OCU160	OCU161	OCU170	OCU171	-	-	-	-
			0: OCU16_OTD0 is disabled 1: OCU16_OTD0 is enabled	0: OCU16_OTD1 is disabled 1: OCU16_OTD1 is enabled	0: OCU17_OTD0 is disabled 1: OCU17_OTD0 is enabled	0: OCU17_OTD1 is disabled 1: OCU17_OTD1 is enabled	reserved	reserved	reserved	reserved
		-	-	-	-	-	-	-	-	-
			-	-	-	-	-	-	-	-

Note
2. The ADC0ZPDEN register is write-only-once protected.

Table 19. Resource Input Source Table for ADC Configurations (Continued)

Register (Offset)	Resource Input	Register Field	Source for Resource Input							
			Bit 0	Bit 1	Bit 2	Bit 3	Bit 4	Bit 5	Bit 6	Bit 7
ADC0EDG-IOCU5 (0x0018)	ADC0_EDGI	-	-	-	-	-	-	-	-	-
			-	-	-	-	-	-	-	-
		-	-	-	-	-	-	-	-	-
			-	-	-	-	-	-	-	-
ADC0EDG-IOCU6 (0x001A)	ADC0_EDGI	-	-	-	-	-	-	-	-	-
			-	-	-	-	-	-	-	-
		-	-	-	-	-	-	-	-	-
			-	-	-	-	-	-	-	-
ADC0EDG-IOCU7 (0x001C)	ADC0_EDGI	-	-	-	-	-	-	-	-	-
			-	-	-	-	-	-	-	-
		-	-	-	-	-	-	-	-	-
			-	-	-	-	-	-	-	-
ADC0TIMI (0x001E)	ADC0_TIMI	ADC0TIMIL	RLT	PPGL	PPGH	-	-	-	-	-
			UFSET output of RLT that is selected by RICFGRADC0_TIMIRLT bits [3:0]	ADTRGH and ADTRGL signals of PPG0 to PPG63 ORed together	ADTRGH and ADTRGL signals of PPG64 to PPG127 ORed together	reserved	reserved	reserved	reserved	reserved
		-	-	-	-	-	-	-	-	-
			-	-	-	-	-	-	-	-
ADC0TIMIRLT (0x0020)	ADC0_TIMI	ADC0TIMIRLTL	RLT				-	-	-	-
			0000: RLT0_UFSET 0001: RLT1_UFSET ... 1001: RLT9_UFSET 1010 - 1111: clipped to GND (reserved in spec)				-	-	-	-
		-	-	-	-	-	-	-	-	-
			-	-	-	-	-	-	-	-
ADC0ZPDEN[2] (0x003E)	ADC0_ZPD	ADC0ZPDEN	ZPDEN				-	-	-	-
			0: ZPD disable 1: ZPD enable							

Note
2. The ADC0ZPDEN register is write-only-once protected.

RICFG0

Table 20. Resource Input Source Table (RICFG0)

Register (Offset)	Resource Input	RESSEL[3:0]/ PORTSEL[3:0]	Source for Resource Input							
			0	1	2	3	4	5	6	7
			8	9	10	11	12	13	14	15
ADC0AN26 (0x0000)	ADC0_AN26	RESSEL	-	-	-	-	-	-	-	-
			-	-	-	-	-	-	-	-
		PORTSEL	P1_00	P1_01	P1_02	P1_03	P1_00 / P1_01	P1_01 / P1_00	P1_02 / P1_03	P1_03 / P1_02
			reserved	reserved	reserved	reserved	reserved	reserved	reserved	reserved
ADC0AN27 (0x0002)	ADC0_AN27	RESSEL	-	-	-	-	-	-	-	-
			-	-	-	-	-	-	-	-
		PORTSEL	P1_04	P1_05	P1_06	P1_07	P1_04 / P1_05	P1_05 / P1_04	P1_06 / P1_07	P1_07 / P1_06
			reserved	reserved	reserved	reserved	reserved	reserved	reserved	reserved
ADC0AN28 (0x0004)	ADC0_AN28	RESSEL	-	-	-	-	-	-	-	-
			-	-	-	-	-	-	-	-
		PORTSEL	P1_08	P1_09	P1_10	P1_11	P1_08 / P1_09	P1_09 / P1_08	P1_10 / P1_11	P1_11 / P1_10
			reserved	reserved	reserved	reserved	reserved	reserved	reserved	reserved
ADC0AN29 (0x0006)	ADC0_AN29	RESSEL	-	-	-	-	-	-	-	-
			-	-	-	-	-	-	-	-
		PORTSEL	P1_12	P1_13	P1_14	P1_15	P1_12 (20)/ P1_13 (21)	P1_13 (21)/ P1_12 (20)	P1_14 (22)/ P1_15 (23)	P1_15 (23)/ P1_14 (22)
			reserved	reserved	reserved	reserved	reserved	reserved	reserved	reserved
ADC0AN30 (0x0008)	ADC0_AN30	RESSEL	-	-	-	-	-	-	-	-
			-	-	-	-	-	-	-	-
		PORTSEL	P1_16	P1_17	P1_18	P1_19	P1_16 / P1_17	P1_17 / P1_16	P1_18 / P1_19	P1_19 / P1_18
			reserved	reserved	reserved	reserved	reserved	reserved	reserved	reserved
ADC0AN31 (0x000A)	ADC0_AN31	RESSEL	-	-	-	-	-	-	-	-
			-	-	-	-	-	-	-	-
		PORTSEL	P1_20	P1_21	P1_22	P1_23	P1_20 / P1_21	P1_21 / P1_20	P1_22 / P1_23	P1_23 / P1_22
			reserved	reserved	reserved	reserved	reserved	reserved	reserved	reserved
FRT0-TEXT (0x0400)	FRT0_TEXT	RESSEL	Port Sel	RLT2_TOT	RLT3_TOT	RLT0_TOT	PPG10_PPGB	reserved	reserved	reserved
			-	-	-	-	-	-	-	-
		PORTSEL	reserved	reserved	reserved	P0_40	P0_47	P2_44	P2_45	P2_47
			reserved	reserved	reserved	reserved	reserved	reserved	reserved	reserved
FRT1-TEXT (0x0420)	FRT1_TEXT	RESSEL	Port Sel	RLT2_TOT	RLT3_TOT	RLT1_TOT	PPG11_PPGB	reserved	reserved	reserved
			-	-	-	-	-	-	-	-
		PORTSEL	reserved	reserved	P0_41	P0_47	P2_45	P2_47	reserved	reserved
			reserved	reserved	reserved	reserved	reserved	reserved	reserved	reserved

Table 20. Resource Input Source Table (RICFG0) (Continued)

Register (Offset)	Resource Input	RESSEL[3:0]/ PORTSEL[3:0]	Source for Resource Input							
			0	1	2	3	4	5	6	7
			8	9	10	11	12	13	14	15
FRT2-TEXT (0x0440)	FRT2_TEXT	RESSEL	Port Sel	RLT2_TOT	RLT3_TOT	RLT4_TOT	PPG12_PPGB	reserved	reserved	reserved
			-	-	-	-	-	-	-	-
		PORTSEL	reserved	reserved	reserved	P0_42	P0_47	P2_45	P2_46	P2_47
			reserved	reserved	reserved	reserved	reserved	reserved	reserved	reserved
FRT3-TEXT (0x0460)	FRT3_TEXT	RESSEL	Port Sel	RLT2_TOT	RLT3_TOT	RLT5_TOT	PPG13_PPGB	reserved	reserved	reserved
			-	-	-	-	-	-	-	-
		PORTSEL	reserved	reserved	P0_43	P0_47	P2_45	P2_47	reserved	reserved
			reserved	reserved	reserved	reserved	reserved	reserved	reserved	reserved
ICU2IN0 (0x0840)	ICU2_IN0	RESSEL	-	-	-	-	-	-	-	-
			-	-	-	-	-	-	-	-
		PORTSEL	reserved	reserved	reserved	reserved	reserved	P0_48	P1_35	reserved
			P0_41	P1_10	P2_32	P2_40	P3_13	reserved	reserved	reserved
ICU2IN1 (0x0842)	ICU2_IN1	RESSEL	-	-	-	-	-	-	-	-
			-	-	-	-	-	-	-	-
		PORTSEL	reserved	reserved	reserved	reserved	reserved	P0_49	P1_36	reserved
			P0_42	P1_09	P2_33	P2_41	P3_14	reserved	reserved	reserved
ICU2FRT-SEL (0x0844)	ICU2_FRTSEL	RESSEL	FRT2	FRT0	reserved	reserved	reserved	reserved	reserved	reserved
			-	-	-	-	-	-	-	-
		PORTSEL	-	-	-	-	-	-	-	-
ICU3IN0 (0x0860)	ICU3_IN0	RESSEL	-	-	-	-	-	-	-	-
			-	-	-	-	-	-	-	-
		PORTSEL	reserved	reserved	reserved	reserved	P0_50	P1_37	reserved	P1_32
			P2_34	P2_42	P3_02	P3_15	reserved	reserved	reserved	reserved
ICU3IN1 (0x0862)	ICU3_IN1	RESSEL	-	-	-	-	-	-	-	-
			-	-	-	-	-	-	-	-
		PORTSEL	reserved	reserved	reserved	reserved	P0_51	P1_38	reserved	P1_31
			P2_35	P2_43	P3_01	P3_16	reserved	reserved	reserved	reserved
ICU3FRT-SEL (0x0864)	ICU3_FRTSEL	RESSEL	FRT3	FRT1	ICU2_TOUT0 [15:0]	reserved	reserved	reserved	reserved	reserved
			-	-	-	-	-	-	-	-
		PORTSEL	-	-	-	-	-	-	-	-
OCU0OTD0GATE (0x0C00)	OCU0_OTD0 Gate	RESSEL	RLT4_TOT	RLT0_TOT	PPG5_PPGA	PPG6_PPGA	OCU1_OTD0	OCU1_OTD1	reserved	reserved
			-	-	-	-	-	-	-	-
		PORTSEL	-	-	-	-	-	-	-	-
OCU0OTD0GM (0x0C02)	OCU0_OTD0 GateMode	RESSEL	Async	Sync	reserved	reserved	reserved	reserved	reserved	reserved
			-	-	-	-	-	-	-	-
		PORTSEL	-	-	-	-	-	-	-	-

Table 20. Resource Input Source Table (RICFG0) (Continued)

Register (Offset)	Resource Input	RESSEL[3:0]/ PORTSEL[3:0]	Source for Resource Input							
			0	1	2	3	4	5	6	7
			8	9	10	11	12	13	14	15
OCU0OTD 1GATE (0x0C04)	OCU0_OTD1 Gate	RESSEL	RLT4_TOT	RLT1_TOT	PPG5_PPGA	PPG7_PPGA	OCU1_OTD0	OCU1_OTD1	reserved	reserved
			-	-	-	-	-	-	-	-
		PORTSEL	-	-	-	-	-	-	-	-
OCU0OTD 1GM (0x0C06)	OCU0_OTD1 GateMode	RESSEL	Async	Sync	reserved	reserved	reserved	reserved	reserved	reserved
			-	-	-	-	-	-	-	-
		PORTSEL	-	-	-	-	-	-	-	-
OCU1CMP 0EXT (0x0C20)	OCU1_C-MP0EXT	RESSEL	OCU1_M-TRG	OCU0_C-MP0OUT	reserved	reserved	reserved	reserved	reserved	reserved
			-	-	-	-	-	-	-	-
		PORTSEL	-	-	-	-	-	-	-	-
OCU1FRT-SEL (0x0C22)	OCU1_FRT-SEL	RESSEL	FRT1	FRT0	reserved	reserved	reserved	reserved	reserved	reserved
			-	-	-	-	-	-	-	-
		PORTSEL	-	-	-	-	-	-	-	-
OCU1OTD 0GATE (0x0C24)	OCU1_OTD0 Gate	RESSEL	RLT4_TOT	RLT2_TOT	PPG5_PPGA	PPG8_PPGA	OCU0_OTD0	OCU0_OTD1	reserved	reserved
			-	-	-	-	-	-	-	-
		PORTSEL	-	-	-	-	-	-	-	-
OCU1OTD 0GM (0x0C26)	OCU1_OTD0 GateMode	RESSEL	Async	Sync	reserved	reserved	reserved	reserved	reserved	reserved
			-	-	-	-	-	-	-	-
		PORTSEL	-	-	-	-	-	-	-	-
OCU1OTD 1GATE (0x0C28)	OCU1_OTD1 Gate	RESSEL	RLT4_TOT	RLT3_TOT	PPG5_PPGA	PPG9_PPGA	OCU0_OTD0	OCU0_OTD1	reserved	reserved
			-	-	-	-	-	-	-	-
		PORTSEL	-	-	-	-	-	-	-	-
OCU1OTD 1GM (0x0C2A)	OCU1_OTD1 GateMode	RESSEL	Async	Sync	reserved	reserved	reserved	reserved	reserved	reserved
			-	-	-	-	-	-	-	-
		PORTSEL	-	-	-	-	-	-	-	-
US-ART0SCKI (0x1400)	USART0_SCKI	RESSEL	-	-	-	-	-	-	-	-
			-	-	-	-	-	-	-	-
		PORTSEL	reserved	reserved	P0_41	P0_46	P1_31	reserved	P1_09	P3_01
			P3_05	reserved	reserved	reserved	reserved	reserved	reserved	reserved
US-ART0SIN (0x1402)	USART0_SIN	RESSEL	-	-	-	-	-	-	-	-
			-	-	-	-	-	-	-	-
		PORTSEL	reserved	reserved	reserved	P0_40	P0_45	P1_30	reserved	P0_42
			P1_08	P3_00	P3_02	P3_04	reserved	reserved	reserved	reserved
PPG0PPG AGATE (0x1C00)	PPG0_PPGA Gate	RESSEL	1	RLT1_TOT	RLT2_TOT	RLT3_TOT	RLT4_TOT	RLT5_TOT	RLT6_TOT	RLT7_TOT
			-	-	-	-	-	-	-	-
		PORTSEL	-	-	-	-	-	-	-	-

Table 20. Resource Input Source Table (RICFG0) (Continued)

Register (Offset)	Resource Input	RESSEL[3:0]/ PORTSEL[3:0]	Source for Resource Input							
			0	1	2	3	4	5	6	7
			8	9	10	11	12	13	14	15
PPG0PPGAGM (0x1C02)	PPG0_PPGA GateMode	RESSEL	Async	Sync	reserved	reserved	reserved	reserved	reserved	reserved
			-	-	-	-	-	-	-	-
		PORTSEL	-	-	-	-	-	-	-	-
PPG0PPG-BGATE (0x1C04)	PPG0_PPGB Gate	RESSEL	1	RLT1_TOT	RLT2_TOT	RLT3_TOT	RLT4_TOT	RLT5_TOT	RLT6_TOT	RLT7_TOT
			-	-	-	-	-	-	-	-
		PORTSEL	-	-	-	-	-	-	-	-
PPG0PPG-BGM (0x1C06)	PPG0_PPGB GateMode	RESSEL	Async	Sync	reserved	reserved	reserved	reserved	reserved	reserved
			-	-	-	-	-	-	-	-
		PORTSEL	-	-	-	-	-	-	-	-
PPG1PPGAGATE (0x1C20)	PPG1_PPGA Gate	RESSEL	1	RLT1_TOT	RLT2_TOT	RLT3_TOT	RLT4_TOT	RLT5_TOT	RLT6_TOT	RLT7_TOT
			-	-	-	-	-	-	-	-
		PORTSEL	-	-	-	-	-	-	-	-
PPG1PPGAGM (0x1C22)	PPG1_PPGA GateMode	RESSEL	Async	Sync	reserved	reserved	reserved	reserved	reserved	reserved
			-	-	-	-	-	-	-	-
		PORTSEL	-	-	-	-	-	-	-	-
PPG1PPG-BGATE (0x1C24)	PPG1_PPGB Gate	RESSEL	1	RLT1_TOT	RLT2_TOT	RLT3_TOT	RLT4_TOT	RLT5_TOT	RLT6_TOT	RLT7_TOT
			-	-	-	-	-	-	-	-
		PORTSEL	-	-	-	-	-	-	-	-
PPG1PPG-BGM (0x1C26)	PPG1_PPGB GateMode	RESSEL	Async	Sync	reserved	reserved	reserved	reserved	reserved	reserved
			-	-	-	-	-	-	-	-
		PORTSEL	-	-	-	-	-	-	-	-
PPG2PPGAGATE (0x1C40)	PPG2_PPGA Gate	RESSEL	1	RLT1_TOT	RLT2_TOT	RLT3_TOT	RLT4_TOT	RLT5_TOT	RLT6_TOT	RLT7_TOT
			-	-	-	-	-	-	-	-
		PORTSEL	-	-	-	-	-	-	-	-
PPG2PPGAGM (0x1C42)	PPG2_PPGA GateMode	RESSEL	Async	Sync	reserved	reserved	reserved	reserved	reserved	reserved
			-	-	-	-	-	-	-	-
		PORTSEL	-	-	-	-	-	-	-	-
PPG2PPG-BGATE (0x1C44)	PPG2_PPGB Gate	RESSEL	1	RLT1_TOT	RLT2_TOT	RLT3_TOT	RLT4_TOT	RLT5_TOT	RLT6_TOT	RLT7_TOT
			-	-	-	-	-	-	-	-
		PORTSEL	-	-	-	-	-	-	-	-
PPG2PPG-BGM (0x1C46)	PPG2_PPGB GateMode	RESSEL	Async	Sync	reserved	reserved	reserved	reserved	reserved	reserved
			-	-	-	-	-	-	-	-
		PORTSEL	-	-	-	-	-	-	-	-
PPG3PPGAGATE (0x1C60)	PPG3_PPGA Gate	RESSEL	1	RLT1_TOT	RLT2_TOT	RLT3_TOT	RLT4_TOT	RLT5_TOT	RLT6_TOT	RLT7_TOT
			-	-	-	-	-	-	-	-
		PORTSEL	-	-	-	-	-	-	-	-

Table 20. Resource Input Source Table (RICFG0) (Continued)

Register (Offset)	Resource Input	RESSEL[3:0]/ PORTSEL[3:0]	Source for Resource Input							
			0	1	2	3	4	5	6	7
			8	9	10	11	12	13	14	15
PPG3PPGAGM (0x1C62)	PPG3_PPGA GateMode	RESSEL	Async	Sync	reserved	reserved	reserved	reserved	reserved	reserved
			-	-	-	-	-	-	-	-
		PORTSEL	-	-	-	-	-	-	-	-
PPG3PPG-BGATE (0x1C64)	PPG3_PPGB Gate	RESSEL	1	RLT1_TOT	RLT2_TOT	RLT3_TOT	RLT4_TOT	RLT5_TOT	RLT6_TOT	RLT7_TOT
			-	-	-	-	-	-	-	-
		PORTSEL	-	-	-	-	-	-	-	-
PPG3PPG-BGM (0x1C66)	PPG3_PPGB GateMode	RESSEL	Async	Sync	reserved	reserved	reserved	reserved	reserved	reserved
			-	-	-	-	-	-	-	-
		PORTSEL	-	-	-	-	-	-	-	-
PPG4PPGAGATE (0x1C80)	PPG4_PPGA Gate	RESSEL	1	RLT1_TOT	RLT2_TOT	RLT3_TOT	RLT4_TOT	RLT5_TOT	RLT6_TOT	RLT7_TOT
			-	-	-	-	-	-	-	-
		PORTSEL	-	-	-	-	-	-	-	-
PPG4PPGAGM (0x1C82)	PPG4_PPGA GateMode	RESSEL	Async	Sync	reserved	reserved	reserved	reserved	reserved	reserved
			-	-	-	-	-	-	-	-
		PORTSEL	-	-	-	-	-	-	-	-
PPG4PPG-BGATE (0x1C84)	PPG4_PPGB Gate	RESSEL	1	RLT1_TOT	RLT2_TOT	RLT3_TOT	RLT4_TOT	RLT5_TOT	RLT6_TOT	RLT7_TOT
			-	-	-	-	-	-	-	-
		PORTSEL	-	-	-	-	-	-	-	-
PPG4PPG-BGM (0x1C86)	PPG4_PPGB GateMode	RESSEL	Async	Sync	reserved	reserved	reserved	reserved	reserved	reserved
			-	-	-	-	-	-	-	-
		PORTSEL	-	-	-	-	-	-	-	-
PPG5PPGAGATE (0x1CA0)	PPG5_PPGA Gate	RESSEL	1	RLT1_TOT	RLT2_TOT	RLT3_TOT	RLT4_TOT	RLT5_TOT	RLT6_TOT	RLT7_TOT
			-	-	-	-	-	-	-	-
		PORTSEL	-	-	-	-	-	-	-	-
PPG5PPGAGM (0x1-CA2)	PPG5_PPGA GateMode	RESSEL	Async	Sync	reserved	reserved	reserved	reserved	reserved	reserved
			-	-	-	-	-	-	-	-
		PORTSEL	-	-	-	-	-	-	-	-
PPG5PPG-BGATE (0x1CA4)	PPG5_PPGB Gate	RESSEL	1	RLT1_TOT	RLT2_TOT	RLT3_TOT	RLT4_TOT	RLT5_TOT	RLT6_TOT	RLT7_TOT
			-	-	-	-	-	-	-	-
		PORTSEL	-	-	-	-	-	-	-	-
PPG5PPG-BGM (0x1-CA6)	PPG5_PPGB GateMode	RESSEL	Async	Sync	reserved	reserved	reserved	reserved	reserved	reserved
			-	-	-	-	-	-	-	-
		PORTSEL	-	-	-	-	-	-	-	-
PPG6PPGAGATE (0x1CC0)	PPG6_PPGA Gate	RESSEL	1	RLT1_TOT	RLT2_TOT	RLT3_TOT	RLT4_TOT	RLT5_TOT	RLT6_TOT	RLT7_TOT
			-	-	-	-	-	-	-	-
		PORTSEL	-	-	-	-	-	-	-	-

Table 20. Resource Input Source Table (RICFG0) (Continued)

Register (Offset)	Resource Input	RESSEL[3:0]/ PORTSEL[3:0]	Source for Resource Input							
			0	1	2	3	4	5	6	7
			8	9	10	11	12	13	14	15
PPG6PPGAGM (0x1CC2)	PPG6_PPGA GateMode	RESSEL	Async	Sync	reserved	reserved	reserved	reserved	reserved	reserved
			-	-	-	-	-	-	-	-
		PORTSEL	-	-	-	-	-	-	-	-
PPG6PPG-BGATE (0x1CC4)	PPG6_PPGB Gate	RESSEL	1	RLT1_TOT	RLT2_TOT	RLT3_TOT	RLT4_TOT	RLT5_TOT	RLT6_TOT	RLT7_TOT
			-	-	-	-	-	-	-	-
		PORTSEL	-	-	-	-	-	-	-	-
PPG6PPG-BGM (0x1CC6)	PPG6_PPGB GateMode	RESSEL	Async	Sync	reserved	reserved	reserved	reserved	reserved	reserved
			-	-	-	-	-	-	-	-
		PORTSEL	-	-	-	-	-	-	-	-
PPG7PPGAGATE (0x1CE0)	PPG7_PPGA Gate	RESSEL	1	RLT1_TOT	RLT2_TOT	RLT3_TOT	RLT4_TOT	RLT5_TOT	RLT6_TOT	RLT7_TOT
			-	-	-	-	-	-	-	-
		PORTSEL	-	-	-	-	-	-	-	-
PPG7PPGAGM (0x1CE2)	PPG7_PPGA GateMode	RESSEL	Async	Sync	reserved	reserved	reserved	reserved	reserved	reserved
			-	-	-	-	-	-	-	-
		PORTSEL	-	-	-	-	-	-	-	-
PPG7PPG-BGATE (0x1CE4)	PPG7_PPGB Gate	RESSEL	1	RLT1_TOT	RLT2_TOT	RLT3_TOT	RLT4_TOT	RLT5_TOT	RLT6_TOT	RLT7_TOT
			-	-	-	-	-	-	-	-
		PORTSEL	-	-	-	-	-	-	-	-
PPG7PPG-BGM (0x1CE6)	PPG7_PPGB GateMode	RESSEL	Async	Sync	reserved	reserved	reserved	reserved	reserved	reserved
			-	-	-	-	-	-	-	-
		PORTSEL	-	-	-	-	-	-	-	-
PPG8PPGAGATE (0x1D00)	PPG8_PPGA Gate	RESSEL	1	RLT1_TOT	RLT2_TOT	RLT3_TOT	RLT4_TOT	RLT5_TOT	RLT6_TOT	RLT7_TOT
			-	-	-	-	-	-	-	-
		PORTSEL	-	-	-	-	-	-	-	-
PPG8PPGAGM (0x1D02)	PPG8_PPGA GateMode	RESSEL	Async	Sync	reserved	reserved	reserved	reserved	reserved	reserved
			-	-	-	-	-	-	-	-
		PORTSEL	-	-	-	-	-	-	-	-
PPG8PPG-BGATE (0x1D04)	PPG8_PPGB Gate	RESSEL	1	RLT1_TOT	RLT2_TOT	RLT3_TOT	RLT4_TOT	RLT5_TOT	RLT6_TOT	RLT7_TOT
			-	-	-	-	-	-	-	-
		PORTSEL	-	-	-	-	-	-	-	-
PPG8PPG-BGM (0x1D06)	PPG8_PPGB GateMode	RESSEL	Async	Sync	reserved	reserved	reserved	reserved	reserved	reserved
			-	-	-	-	-	-	-	-
		PORTSEL	-	-	-	-	-	-	-	-
PPG9PPGAGATE (0x1D20)	PPG9_PPGA Gate	RESSEL	1	RLT1_TOT	RLT2_TOT	RLT3_TOT	RLT4_TOT	RLT5_TOT	RLT6_TOT	RLT7_TOT
			-	-	-	-	-	-	-	-
		PORTSEL	-	-	-	-	-	-	-	-

Table 20. Resource Input Source Table (RICFG0) (Continued)

Register (Offset)	Resource Input	RESSEL[3:0]/ PORTSEL[3:0]	Source for Resource Input							
			0	1	2	3	4	5	6	7
			8	9	10	11	12	13	14	15
PPG9PPGAGM (0x1D22)	PPG9_PPGA GateMode	RESSEL	Async	Sync	reserved	reserved	reserved	reserved	reserved	reserved
			-	-	-	-	-	-	-	-
		PORTSEL	-	-	-	-	-	-	-	-
PPG9PPG-BGATE (0x1D24)	PPG9_PPGB Gate	RESSEL	1	RLT1_TOT	RLT2_TOT	RLT3_TOT	RLT4_TOT	RLT5_TOT	RLT6_TOT	RLT7_TOT
			-	-	-	-	-	-	-	-
		PORTSEL	-	-	-	-	-	-	-	-
PPG9PPG-BGM (0x1D26)	PPG9_PPGB GateMode	RESSEL	Async	Sync	reserved	reserved	reserved	reserved	reserved	reserved
			-	-	-	-	-	-	-	-
		PORTSEL	-	-	-	-	-	-	-	-
PPG10PPGAGATE (0x1D40)	PPG10_PPGA Gate	RESSEL	1	RLT1_TOT	RLT2_TOT	RLT3_TOT	RLT4_TOT	RLT5_TOT	RLT6_TOT	RLT7_TOT
			-	-	-	-	-	-	-	-
		PORTSEL	-	-	-	-	-	-	-	-
PPG10PPGAGM (0x1D42)	PPG10_PPGA GateMode	RESSEL	Async	Sync	reserved	reserved	reserved	reserved	reserved	reserved
			-	-	-	-	-	-	-	-
		PORTSEL	-	-	-	-	-	-	-	-
PPG10PPGBGATE (0x1D44)	PPG10_PPGB Gate	RESSEL	1	RLT1_TOT	RLT2_TOT	RLT3_TOT	RLT4_TOT	RLT5_TOT	RLT6_TOT	RLT7_TOT
			-	-	-	-	-	-	-	-
		PORTSEL	-	-	-	-	-	-	-	-
PPG10PPGBGM (0x1D46)	PPG10_PPGB GateMode	RESSEL	Async	Sync	reserved	reserved	reserved	reserved	reserved	reserved
			-	-	-	-	-	-	-	-
		PORTSEL	-	-	-	-	-	-	-	-
PPG11PPGAGATE (0x1D60)	PPG11_PPGA Gate	RESSEL	1	RLT1_TOT	RLT2_TOT	RLT3_TOT	RLT4_TOT	RLT5_TOT	RLT6_TOT	RLT7_TOT
			-	-	-	-	-	-	-	-
		PORTSEL	-	-	-	-	-	-	-	-
PPG11PPGAGM (0x1D62)	PPG11_PPGA GateMode	RESSEL	Async	Sync	reserved	reserved	reserved	reserved	reserved	reserved
			-	-	-	-	-	-	-	-
		PORTSEL	-	-	-	-	-	-	-	-
PPG11PPGBGATE (0x1D64)	PPG11_PPGB Gate	RESSEL	1	RLT1_TOT	RLT2_TOT	RLT3_TOT	RLT4_TOT	RLT5_TOT	RLT6_TOT	RLT7_TOT
			-	-	-	-	-	-	-	-
		PORTSEL	-	-	-	-	-	-	-	-
PPG11PPGBGM (0x1D66)	PPG11_PPGB GateMode	RESSEL	Async	Sync	reserved	reserved	reserved	reserved	reserved	reserved
			-	-	-	-	-	-	-	-
		PORTSEL	-	-	-	-	-	-	-	-
PPG12PPGAGATE (0x1D80)	PPG12_PPGA Gate	RESSEL	1	RLT1_TOT	RLT2_TOT	RLT3_TOT	RLT4_TOT	RLT5_TOT	RLT6_TOT	RLT7_TOT
			-	-	-	-	-	-	-	-
		PORTSEL	-	-	-	-	-	-	-	-

Table 20. Resource Input Source Table (RICFG0) (Continued)

Register (Offset)	Resource Input	RESSEL[3:0]/ PORTSEL[3:0]	Source for Resource Input							
			0	1	2	3	4	5	6	7
			8	9	10	11	12	13	14	15
PPG12PPGAGM (0x1D82)	PPG12_PPGA GateMode	RESSEL	Async	Sync	reserved	reserved	reserved	reserved	reserved	reserved
			-	-	-	-	-	-	-	-
		PORTSEL	-	-	-	-	-	-	-	-
PPG12PPGBGATE (0x1D84)	PPG12_PPGB Gate	RESSEL	1	RLT1_TOT	RLT2_TOT	RLT3_TOT	RLT4_TOT	RLT5_TOT	RLT6_TOT	RLT7_TOT
			-	-	-	-	-	-	-	-
		PORTSEL	-	-	-	-	-	-	-	-
PPG12PPGBGM (0x1D86)	PPG12_PPGB GateMode	RESSEL	Async	Sync	reserved	reserved	reserved	reserved	reserved	reserved
			-	-	-	-	-	-	-	-
		PORTSEL	-	-	-	-	-	-	-	-
PPG13PPGAGATE (0x1DA0)	PPG13_PPGA Gate	RESSEL	1	RLT1_TOT	RLT2_TOT	RLT3_TOT	RLT4_TOT	RLT5_TOT	RLT6_TOT	RLT7_TOT
			-	-	-	-	-	-	-	-
		PORTSEL	-	-	-	-	-	-	-	-
PPG13PPGAGM (0x1DA2)	PPG13_PPGA GateMode	RESSEL	Async	Sync	reserved	reserved	reserved	reserved	reserved	reserved
			-	-	-	-	-	-	-	-
		PORTSEL	-	-	-	-	-	-	-	-
PPG13PPGBGATE (0x1DA4)	PPG13_PPGB Gate	RESSEL	1	RLT1_TOT	RLT2_TOT	RLT3_TOT	RLT4_TOT	RLT5_TOT	RLT6_TOT	RLT7_TOT
			-	-	-	-	-	-	-	-
		PORTSEL	-	-	-	-	-	-	-	-
PPG13PPGBGM (0x1DA6)	PPG13_PPGB GateMode	RESSEL	Async	Sync	reserved	reserved	reserved	reserved	reserved	reserved
			-	-	-	-	-	-	-	-
		PORTSEL	-	-	-	-	-	-	-	-
PPG14PPGAGATE (0x1DC0)	PPG14_PPGA Gate	RESSEL	1	RLT1_TOT	RLT2_TOT	RLT3_TOT	RLT4_TOT	RLT5_TOT	RLT6_TOT	RLT7_TOT
			-	-	-	-	-	-	-	-
		PORTSEL	-	-	-	-	-	-	-	-
PPG14PPGAGM (0x1DC2)	PPG14_PPGA GateMode	RESSEL	Async	Sync	reserved	reserved	reserved	reserved	reserved	reserved
			-	-	-	-	-	-	-	-
		PORTSEL	-	-	-	-	-	-	-	-
PPG14PPGBGATE (0x1DC4)	PPG14_PPGB Gate	RESSEL	1	RLT1_TOT	RLT2_TOT	RLT3_TOT	RLT4_TOT	RLT5_TOT	RLT6_TOT	RLT7_TOT
			-	-	-	-	-	-	-	-
		PORTSEL	-	-	-	-	-	-	-	-
PPG14PPGBGM (0x1DC6)	PPG14_PPGB GateMode	RESSEL	Async	Sync	reserved	reserved	reserved	reserved	reserved	reserved
			-	-	-	-	-	-	-	-
		PORTSEL	-	-	-	-	-	-	-	-
PPG15PPGAGATE (0x1DE0)	PPG15_PPGA Gate	RESSEL	1	RLT1_TOT	RLT2_TOT	RLT3_TOT	RLT4_TOT	RLT5_TOT	RLT6_TOT	RLT7_TOT
			-	-	-	-	-	-	-	-
		PORTSEL	-	-	-	-	-	-	-	-

Table 20. Resource Input Source Table (RICFG0) (Continued)

Register (Offset)	Resource Input	RESSEL[3:0]/ PORTSEL[3:0]	Source for Resource Input							
			0	1	2	3	4	5	6	7
			8	9	10	11	12	13	14	15
PPG15PPGAGM (0x1DE2)	PPG15_PPGA GateMode	RESSEL	Async	Sync	reserved	reserved	reserved	reserved	reserved	reserved
			-	-	-	-	-	-	-	-
		PORTSEL	-	-	-	-	-	-	-	-
PPG15PPGBGATE (0x1DE4)	PPG15_PPGB Gate	RESSEL	1	RLT1_TOT	RLT2_TOT	RLT3_TOT	RLT4_TOT	RLT5_TOT	RLT6_TOT	RLT7_TOT
			-	-	-	-	-	-	-	-
		PORTSEL	-	-	-	-	-	-	-	-
PPG15PPGBGM (0x1DE6)	PPG15_PPGB GateMode	RESSEL	Async	Sync	reserved	reserved	reserved	reserved	reserved	reserved
			-	-	-	-	-	-	-	-
		PORTSEL	-	-	-	-	-	-	-	-
PPG-GRP0ETRG0 (0x2400)	PPG-GRP0_ETRG0	RESSEL	Port Sel	OCU0_OTD0	OCU0_OTD1	OCU1_OTD0	OCU1_OTD1	reserved	reserved	reserved
			-	-	-	-	-	-	-	-
		PORTSEL	-	-	-	-	-	-	-	-
PPG-GRP0ETRG1 (0x2402)	PPG-GRP0_ETRG1	RESSEL	Port Sel	OCU0_OTD0	OCU0_OTD1	OCU1_OTD0	OCU1_OTD1	reserved	reserved	reserved
			-	-	-	-	-	-	-	-
		PORTSEL	-	-	-	-	-	-	-	-
PPG-GRP0ETRG2 (0x2404)	PPG-GRP0_ETRG2	RESSEL	Port Sel	OCU16_OTD0	OCU16_OTD1	OCU17_OTD0	OCU17_OTD1	reserved	reserved	reserved
			-	-	-	-	-	-	-	-
		PORTSEL	P1_30	-	-	-	-	-	-	-
PPG-GRP0ETRG3 (0x2406)	PPG-GRP0_ETRG3	RESSEL	Port Sel	OCU16_OTD0	OCU16_OTD1	OCU17_OTD0	OCU17_OTD1	reserved	reserved	reserved
			-	-	-	-	-	-	-	-
		PORTSEL	-	-	-	-	-	-	-	-
PPG-GRP0RLT-TRG1 (0x2408)	PPG-GRP0_RLT-TRG1	RESSEL	RLT1_TOT	RLT2_TOT	RLT3_TOT	RLT4_TOT	RLT5_TOT	RLT6_TOT	RLT7_TOT	RLT8_TOT
			-	-	-	-	-	-	-	-
		PORTSEL	-	-	-	-	-	-	-	-
PPG-GRP1ETRG0 (0x2420)	PPG-GRP1_ETRG0	RESSEL	Port Sel	OCU0_OTD0	OCU0_OTD1	OCU1_OTD0	OCU1_OTD1	reserved	reserved	reserved
			-	-	-	-	-	-	-	-
		PORTSEL	-	-	-	-	-	-	-	-
PPG-GRP1ETRG1 (0x2422)	PPG-GRP1_ETRG1	RESSEL	Port Sel	OCU0_OTD0	OCU0_OTD1	OCU1_OTD0	OCU1_OTD1	reserved	reserved	reserved
			-	-	-	-	-	-	-	-
		PORTSEL	-	-	-	-	-	-	-	-
PPG-GRP1ETRG2 (0x2424)	PPG-GRP1_ETRG2	RESSEL	Port Sel	OCU16_OTD0	OCU16_OTD1	OCU17_OTD0	OCU17_OTD1	reserved	reserved	reserved
			-	-	-	-	-	-	-	-
		PORTSEL	P1_30	-	-	-	-	-	-	-

Table 20. Resource Input Source Table (RICFG0) (Continued)

Register (Offset)	Resource Input	RESSEL[3:0]/ PORTSEL[3:0]	Source for Resource Input							
			0	1	2	3	4	5	6	7
			8	9	10	11	12	13	14	15
PPG-GRP1ETRG3 (0x2426)	PPG-GRP1_ETRG3	RESSEL	Port Sel	OCU16_OTD0	OCU16_OTD1	OCU17_OTD0	OCU17_OTD1	reserved	reserved	reserved
			-	-	-	-	-	-	-	-
		PORTSEL	-	-	-	-	-	-	-	-
PPG-GRP1RLT-TRG1 (0x2428)	PPG-GRP1_RLT-TRG1	RESSEL	RLT1_TOT	RLT2_TOT	RLT3_TOT	RLT4_TOT	RLT5_TOT	RLT6_TOT	RLT7_TOT	RLT8_TOT
			-	-	-	-	-	-	-	-
		PORTSEL	-	-	-	-	-	-	-	-
PPG-GRP2ETRG0 (0x2440)	PPG-GRP2_ETRG0	RESSEL	Port Sel	OCU0_OTD0	OCU0_OTD1	OCU1_OTD0	OCU1_OTD1	reserved	reserved	reserved
			-	-	-	-	-	-	-	-
		PORTSEL	-	-	-	-	-	-	-	-
PPG-GRP2ETRG1 (0x2442)	PPG-GRP2_ETRG1	RESSEL	Port Sel	OCU0_OTD0	OCU0_OTD1	OCU1_OTD0	OCU1_OTD1	reserved	reserved	reserved
			-	-	-	-	-	-	-	-
		PORTSEL	P-	-	-	-	-	-	-	-
PPG-GRP2ETRG2 (0x2444)	PPG-GRP2_ETRG2	RESSEL	Port Sel	OCU16_OTD0	OCU16_OTD1	OCU17_OTD0	OCU17_OTD1	reserved	reserved	reserved
			-	-	-	-	-	-	-	-
		PORTSEL	P1_30	-	-	-	-	-	-	-
PPG-GRP2ETRG3 (0x2446)	PPG-GRP2_ETRG3	RESSEL	Port Sel	OCU16_OTD0	OCU16_OTD1	OCU17_OTD0	OCU17_OTD1	reserved	reserved	reserved
			-	-	-	-	-	-	-	-
		PORTSEL	P-	-	-	-	-	-	-	-
PPG-GRP2RLT-TRG1 (0x2448)	PPG-GRP2_RLT-TRG1	RESSEL	RLT1_TOT	RLT2_TOT	RLT3_TOT	RLT4_TOT	RLT5_TOT	RLT6_TOT	RLT7_TOT	RLT8_TOT
			-	-	-	-	-	-	-	-
		PORTSEL	-	-	-	-	-	-	-	-
PPG-GRP3ETRG0 (0x2460)	PPG-GRP3_ETRG0	RESSEL	Port Sel	OCU0_OTD0	OCU0_OTD1	OCU1_OTD0	OCU1_OTD1	reserved	reserved	reserved
			-	-	-	-	-	-	-	-
		PORTSEL	-	-	-	-	-	-	-	-
PPG-GRP3ETRG1 (0x2462)	PPG-GRP3_ETRG1	RESSEL	Port Sel	OCU0_OTD0	OCU0_OTD1	OCU1_OTD0	OCU1_OTD1	reserved	reserved	reserved
			-	-	-	-	-	-	-	-
		PORTSEL	-	-	-	-	-	-	-	-
PPG-GRP3ETRG2 (0x2464)	PPG-GRP3_ETRG2	RESSEL	Port Sel	OCU16_OTD0	OCU16_OTD1	OCU17_OTD0	OCU17_OTD1	reserved	reserved	reserved
			-	-	-	-	-	-	-	-
		PORTSEL	P1_30	-	-	-	-	-	-	-
PPG-GRP3ETRG3 (0x2466)	PPG-GRP3_ETRG3	RESSEL	Port Sel	OCU16_OTD0	OCU16_OTD1	OCU17_OTD0	OCU17_OTD1	reserved	reserved	reserved
			-	-	-	-	-	-	-	-
		PORTSEL	-	-	-	-	-	-	-	-

Table 20. Resource Input Source Table (RICFG0) (Continued)

Register (Offset)	Resource Input	RESSEL[3:0]/ PORTSEL[3:0]	Source for Resource Input							
			0	1	2	3	4	5	6	7
			8	9	10	11	12	13	14	15
PPG-GRP3RLT-TRG1 (0x2468)	PPG-GRP3_RLT-TRG1	RESSEL	RLT1_TOT	RLT2_TOT	RLT3_TOT	RLT4_TOT	RLT5_TOT	RLT6_TOT	RLT7_TOT	RLT8_TOT
			-	-	-	-	-	-	-	-
		PORTSEL	-	-	-	-	-	-	-	-

Table 21. Resource Input Source Table (RICFG1)

Register (Offset)	Resource Input	RESSEL[3:0]/ PORTSEL[3:0]	Source for Resource Input							
			0	1	2	3	4	5	6	7
			8	9	10	11	12	13	14	15
PPG-GRP16ETRG0 (0x0000)	PPG-GRP16_ETRG0	RESSEL	Port Sel	OCU0_OTD0	OCU0_OTD1	OCU1_OTD0	OCU1_OTD1	reserved	reserved	reserved
			-	-	-	-	-	-	-	-
		PORTSEL	-	-	-	-	-	-	-	-
PPG-GRP16ETRG1 (0x0002)	PPG-GRP16_ETRG1	RESSEL	Port Sel	OCU0_OTD0	OCU0_OTD1	OCU1_OTD0	OCU1_OTD1	reserved	reserved	reserved
			-	-	-	-	-	-	-	-
		PORTSEL	-	-	-	-	-	-	-	-
PPG-GRP16ETRG2 (0x0004)	PPG-GRP16_ETRG2	RESSEL	Port Sel	OCU16_OTD0	OCU16_OTD1	OCU17_OTD0	OCU17_OTD1	reserved	reserved	reserved
			-	-	-	-	-	-	-	-
		PORTSEL	-	-	-	-	-	-	-	-
PPG-GRP16ETRG3 (0x0006)	PPG-GRP16_ETRG3	RESSEL	Port Sel	OCU16_OTD0	OCU16_OTD1	OCU17_OTD0	OCU17_OTD1	reserved	reserved	reserved
			-	-	-	-	-	-	-	-
		PORTSEL	-	-	-	-	-	-	-	-
PPG-GRP16RLT-TRG1 (0x0008)	PPG-GRP16_RLT-TRG1	RESSEL	RLT1_TOT	RLT2_TOT	RLT3_TOT	RLT4_TOT	RLT5_TOT	RLT6_TOT	RLT7_TOT	RLT8_TOT
			-	-	-	-	-	-	-	-
		PORTSEL	-	-	-	-	-	-	-	-
PPG-GRP17ETRG0 (0x0020)	PPG-GRP17_ETRG0	RESSEL	Port Sel	OCU0_OTD0	OCU0_OTD1	OCU1_OTD0	OCU1_OTD1	reserved	reserved	reserved
			-	-	-	-	-	-	-	-
		PORTSEL	-	-	-	-	-	-	-	-
PPG-GRP17ETRG1 (0x0022)	PPG-GRP17_ETRG1	RESSEL	Port Sel	OCU0_OTD0	OCU0_OTD1	OCU1_OTD0	OCU1_OTD1	reserved	reserved	reserved
			-	-	-	-	-	-	-	-
		PORTSEL	-	-	-	-	-	-	-	-
PPG-GRP17ETRG2 (0x0024)	PPG-GRP17_ETRG2	RESSEL	Port Sel	OCU16_OTD0	OCU16_OTD1	OCU17_OTD0	OCU17_OTD1	reserved	reserved	reserved
			-	-	-	-	-	-	-	-
		PORTSEL	-	-	-	-	-	-	-	-
PPG-GRP17ETRG3 (0x0026)	PPG-GRP17_ETRG3	RESSEL	Port Sel	OCU16_OTD0	OCU16_OTD1	OCU17_OTD0	OCU17_OTD1	reserved	reserved	reserved
			-	-	-	-	-	-	-	-
		PORTSEL	-	-	-	-	-	-	-	-

Table 21. Resource Input Source Table (RICFG1) (Continued)

Register (Offset)	Resource Input	RESSEL[3:0]/ PORTSEL[3:0]	Source for Resource Input							
			0	1	2	3	4	5	6	7
			8	9	10	11	12	13	14	15
PPG-GRP17RLT-TRG1 (0x0028)	PPG-GRP17_RLT-TRG1	RESSEL	RLT1_TOT	RLT2_TOT	RLT3_TOT	RLT4_TOT	RLT5_TOT	RLT6_TOT	RLT7_TOT	RLT8_TOT
			-	-	-	-	-	-	-	-
		PORTSEL	-	-	-	-	-	-	-	-
CAN0RX (0x0400)	CAN0_RX	RESSEL	CAN0_RX	CAN0_RX &CAN0_TX	reserved	reserved	reserved	reserved	reserved	reserved
			-	-	-	-	-	-	-	-
		PORTSEL	reserved	reserved	reserved	P0_42	P0_48	P0_51	P1_34	P1_00
			P2_41	P2_44	P2_46	reserved	reserved	reserved	reserved	reserved
CAN1RX (0x0420)	CAN1_RX	RESSEL	CAN1_RX	CAN1_RX &CAN1_TX	reserved	reserved	reserved	reserved	reserved	reserved
			-	-	-	-	-	-	-	-
		PORTSEL	reserved	reserved	reserved	P0_43	P0_48	P0_50	P1_36	P1_02
			P2_41	P2_45	P2_47	reserved	reserved	reserved	reserved	reserved
CAN2RX (0x0440)	CAN2_RX	RESSEL	CAN2_RX	CAN2_RX &CAN2_TX	reserved	reserved	reserved	reserved	reserved	reserved
			-	-	-	-	-	-	-	-
		PORTSEL	reserved	reserved	reserved	P0_42	P0_49	P0_50	P1_38	P1_16
			P2_40	P2_45	P2_46	reserved	reserved	reserved	reserved	reserved
FRT16TEXT (0x0C00)	FRT16_TEXT	RESSEL	Port Sel	RLT2_TOT	RLT3_TOT	RLT6_TOT	PPG64_PPGB	reserved	reserved	reserved
			-	-	-	-	-	-	-	-
		PORTSEL	reserved	reserved	P0_44	P0_45	P0_47	P2_40	P2_47	reserved
			reserved	reserved	reserved	reserved	reserved	reserved	reserved	reserved
FRT17TEXT (0x0C20)	FRT17_TEXT	RESSEL	Port Sel	RLT2_TOT	RLT3_TOT	RLT7_TOT	PPG65_PPGB	reserved	reserved	reserved
			-	-	-	-	-	-	-	-
		PORTSEL	reserved	reserved	P0_45	P0_47	P2_41	P2_47	reserved	reserved
			reserved	reserved	reserved	reserved	reserved	reserved	reserved	reserved
FRT18TEXT (0x0C40)	FRT18_TEXT	RESSEL	Port Sel	RLT2_TOT	RLT3_TOT	RLT8_TOT	PPG66_PPGB	reserved	reserved	reserved
			-	-	-	-	-	-	-	-
		PORTSEL	reserved	reserved	P0_45	P0_46	P0_47	P2_42	P2_47	reserved
			reserved	reserved	reserved	reserved	reserved	reserved	reserved	reserved
FRT19TEXT (0x0C60)	FRT19_TEXT	RESSEL	Port Sel	RLT2_TOT	RLT3_TOT	RLT9_TOT	PPG67_PPGB	reserved	reserved	reserved
			-	-	-	-	-	-	-	-
		PORTSEL	reserved	reserved	P0_45	P0_47	P2_43	P2_47	reserved	reserved
			reserved	reserved	reserved	reserved	reserved	reserved	reserved	reserved
ICU18IN0 (0x1040)	ICU18_IN0	RESSEL	-	-	-	-	-	-	-	-
			-	-	-	-	-	-	-	-
		PORTSEL	reserved	reserved	reserved	reserved	reserved	reserved	reserved	P0_46
			P1_13	P1_18	P2_36	P2_44	P3_04	P3_17	reserved	reserved

Table 21. Resource Input Source Table (RICFG1) (Continued)

Register (Offset)	Resource Input	RESSEL[3:0]/ PORTSEL[3:0]	Source for Resource Input							
			0	1	2	3	4	5	6	7
			8	9	10	11	12	13	14	15
ICU18IN1 (0x1042)	ICU18_IN1	RESSEL	-	-	-	-	-	-	-	-
			-	-	-	-	-	-	-	-
		PORTSEL	reserved	reserved	reserved	reserved	P1_24	reserved	reserved	P0_41
			P0_47	P2_37	P2_45	P3_05	P3_18	reserved	reserved	reserved
ICU18FRT-SEL (0x1044)	ICU18_FRTSEL	RESSEL	FRT18	FRT16	reserved	reserved	reserved	reserved	reserved	reserved
			-	-	-	-	-	-	-	-
		PORTSEL	-	-	-	-	-	-	-	-
ICU19IN0 (0x1060)	ICU19_IN0	RESSEL	-	-	-	-	-	-	-	-
			-	-	-	-	-	-	-	-
		PORTSEL	reserved	reserved	reserved	reserved	P1_25	reserved	reserved	P0_42
			P2_38	P2_46	P3_06	P3_19	P3_31	reserved	reserved	reserved
ICU19IN1 (0x1062)	ICU19_IN1	RESSEL	-	-	-	-	-	-	-	-
			-	-	-	-	-	-	-	-
		PORTSEL	reserved	reserved	reserved	reserved	P1_26	reserved	reserved	P1_14
			P1_19	P2_39	P2_47	P3_07	P3_20	P3_32	reserved	reserved
ICU19FRT-SEL (0x1064)	ICU19_FRTSEL	RESSEL	FRT19	FRT17	ICU18_TOUT0 [15:0]	reserved	reserved	reserved	reserved	reserved
			-	-	-	-	-	-	-	-
		PORTSEL	-	-	-	-	-	-	-	-
OCU16OTD0 GATE (0x1400)	OCU16_OTD0 Gate	RESSEL	RLT4_TOT	RLT5_TOT	PPG64_PPGB	PPG65_PPGB	OCU17_OTD0	OCU17_OTD1	reserved	reserved
			-	-	-	-	-	-	-	-
		PORTSEL	-	-	-	-	-	-	-	-
OCU16OTD0 GM (0x1402)	OCU16_OTD0 GateMode	RESSEL	Async	Sync	reserved	reserved	reserved	reserved	reserved	reserved
			-	-	-	-	-	-	-	-
		PORTSEL	-	-	-	-	-	-	-	-
OCU16OTD1 GATE (0x1404)	OCU16_OTD1 Gate	RESSEL	RLT4_TOT	RLT6_TOT	PPG64_PPGB	PPG66_PPGB	OCU17_OTD0	OCU17_OTD1	reserved	reserved
			-	-	-	-	-	-	-	-
		PORTSEL	-	-	-	-	-	-	-	-
OCU16OTD1 GM (0x1406)	OCU16_OTD1 GateMode	RESSEL	Async	Sync	reserved	reserved	reserved	reserved	reserved	reserved
			-	-	-	-	-	-	-	-
		PORTSEL	-	-	-	-	-	-	-	-
OCU17CMP0 EXT (0x1420)	OCU17_C-MP0EXT	RESSEL	OCU17_MTRG	OCU16_C-MP0OUT	reserved	reserved	reserved	reserved	reserved	reserved
			-	-	-	-	-	-	-	-
		PORTSEL	-	-	-	-	-	-	-	-
OCU17FRT-SEL (0x1422)	OCU17_FRT-SEL	RESSEL	FRT17	FRT16	reserved	reserved	reserved	reserved	reserved	reserved
			-	-	-	-	-	-	-	-
		PORTSEL	-	-	-	-	-	-	-	-

Table 21. Resource Input Source Table (RICFG1) (Continued)

Register (Offset)	Resource Input	RESSEL[3:0]/ PORTSEL[3:0]	Source for Resource Input							
			0	1	2	3	4	5	6	7
			8	9	10	11	12	13	14	15
OCU17OTD0 GATE (0x1424)	OCU17_OTD0 Gate	RESSEL	RLT4_TOT	RLT7_TOT	PPG64_PPGB	PPG67_PPGB	OCU16_OTD0	OCU16_OTD1	reserved	reserved
			-	-	-	-	-	-	-	-
		PORTSEL	-	-	-	-	-	-	-	-
OCU17OTD0 GM (0x1426)	OCU17_OTD0 GateMode	RESSEL	Async	Sync	reserved	reserved	reserved	reserved	reserved	reserved
			-	-	-	-	-	-	-	-
		PORTSEL	-	-	-	-	-	-	-	-
OCU17OTD1 GATE (0x1428)	OCU17_OTD1 Gate	RESSEL	RLT4_TOT	RLT8_TOT	PPG64_PPGB	PPG68_PPGB	OCU16_OTD0	OCU16_OTD1	reserved	reserved
			-	-	-	-	-	-	-	-
		PORTSEL	-	-	-	-	-	-	-	-
OCU17OTD1 GM (0x142A)	OCU17_OTD1 GateMode	RESSEL	Async	Sync	reserved	reserved	reserved	reserved	reserved	reserved
			-	-	-	-	-	-	-	-
		PORTSEL	-	-	-	-	-	-	-	-
USART6SCKI (0x1C00)	USART6_SCKI	RESSEL	-	-	-	-	-	-	-	-
			-	-	-	-	-	-	-	-
		PORTSEL	reserved	reserved	P0_41	P0_46	reserved	P1_13	P3_01	P3_05
			reserved	reserved	reserved	reserved	reserved	reserved	reserved	reserved
USART6SIN (0x1C02)	USART6_SIN	RESSEL	-	-	-	-	-	-	-	-
			-	-	-	-	-	-	-	-
		PORTSEL	reserved	reserved	reserved	P0_40	P0_45	reserved	P0_47	P1_12
			P3_00	P3_04	P3_06	reserved	reserved	reserved	reserved	reserved
PPG64PPGA GATE (0x2400)	PPG64_PPGA Gate	RESSEL	1	RLT1_TOT	RLT2_TOT	RLT3_TOT	RLT4_TOT	RLT5_TOT	RLT6_TOT	RLT7_TOT
			-	-	-	-	-	-	-	-
		PORTSEL	-	-	-	-	-	-	-	-
PPG64PPGA GM (0x2402)	PPG64_PPGA GateMode	RESSEL	Async	Sync	reserved	reserved	reserved	reserved	reserved	reserved
			-	-	-	-	-	-	-	-
		PORTSEL	-	-	-	-	-	-	-	-
PPG64PPGB-GATE (0x2404)	PPG64_PPGB Gate	RESSEL	1	RLT1_TOT	RLT2_TOT	RLT3_TOT	RLT4_TOT	RLT5_TOT	RLT6_TOT	RLT7_TOT
			-	-	-	-	-	-	-	-
		PORTSEL	-	-	-	-	-	-	-	-
PPG64PPGB-GM (0x2406)	PPG64_PPGB GateMode	RESSEL	Async	Sync	reserved	reserved	reserved	reserved	reserved	reserved
			-	-	-	-	-	-	-	-
		PORTSEL	-	-	-	-	-	-	-	-
PPG65PPGA GATE (0x2420)	PPG65_PPGA Gate	RESSEL	1	RLT1_TOT	RLT2_TOT	RLT3_TOT	RLT4_TOT	RLT5_TOT	RLT6_TOT	RLT7_TOT
			-	-	-	-	-	-	-	-
		PORTSEL	-	-	-	-	-	-	-	-

Table 21. Resource Input Source Table (RICFG1) (Continued)

Register (Offset)	Resource Input	RESSEL[3:0]/ PORTSEL[3:0]	Source for Resource Input							
			0	1	2	3	4	5	6	7
			8	9	10	11	12	13	14	15
PPG65PPGAGM (0x2422)	PPG65_PPGA GateMode	RESSEL	Async	Sync	reserved	reserved	reserved	reserved	reserved	reserved
			-	-	-	-	-	-	-	-
		PORTSEL	-	-	-	-	-	-	-	-
PPG65PPGB-GATE (0x2424)	PPG65_PPGB Gate	RESSEL	1	RLT1_TOT	RLT2_TOT	RLT3_TOT	RLT4_TOT	RLT5_TOT	RLT6_TOT	RLT7_TOT
			-	-	-	-	-	-	-	-
		PORTSEL	-	-	-	-	-	-	-	-
PPG65PPGB-GM (0x2426)	PPG65_PPGB GateMode	RESSEL	Async	Sync	reserved	reserved	reserved	reserved	reserved	reserved
			-	-	-	-	-	-	-	-
		PORTSEL	-	-	-	-	-	-	-	-
PPG66PPGAGATE (0x2440)	PPG66_PPGA Gate	RESSEL	1	RLT1_TOT	RLT2_TOT	RLT3_TOT	RLT4_TOT	RLT5_TOT	RLT6_TOT	RLT7_TOT
			-	-	-	-	-	-	-	-
		PORTSEL	-	-	-	-	-	-	-	-
PPG66PPGAGM (0x2442)	PPG66_PPGA GateMode	RESSEL	Async	Sync	reserved	reserved	reserved	reserved	reserved	reserved
			-	-	-	-	-	-	-	-
		PORTSEL	-	-	-	-	-	-	-	-
PPG66PPGB-GATE (0x2444)	PPG66_PPGB Gate	RESSEL	1	RLT1_TOT	RLT2_TOT	RLT3_TOT	RLT4_TOT	RLT5_TOT	RLT6_TOT	RLT7_TOT
			-	-	-	-	-	-	-	-
		PORTSEL	-	-	-	-	-	-	-	-
PPG66PPGB-GM (0x2446)	PPG66_PPGB GateMode	RESSEL	Async	Sync	reserved	reserved	reserved	reserved	reserved	reserved
			-	-	-	-	-	-	-	-
		PORTSEL	-	-	-	-	-	-	-	-
PPG67PPGAGATE (0x2460)	PPG67_PPGA Gate	RESSEL	1	RLT1_TOT	RLT2_TOT	RLT3_TOT	RLT4_TOT	RLT5_TOT	RLT6_TOT	RLT7_TOT
			-	-	-	-	-	-	-	-
		PORTSEL	-	-	-	-	-	-	-	-
PPG67PPGAGM (0x2462)	PPG67_PPGA GateMode	RESSEL	Async	Sync	reserved	reserved	reserved	reserved	reserved	reserved
			-	-	-	-	-	-	-	-
		PORTSEL	-	-	-	-	-	-	-	-
PPG67PPGB-GATE (0x2464)	PPG67_PPGB Gate	RESSEL	1	RLT1_TOT	RLT2_TOT	RLT3_TOT	RLT4_TOT	RLT5_TOT	RLT6_TOT	RLT7_TOT
			-	-	-	-	-	-	-	-
		PORTSEL	-	-	-	-	-	-	-	-
PPG67PPGB-GM (0x2466)	PPG67_PPGB GateMode	RESSEL	Async	Sync	reserved	reserved	reserved	reserved	reserved	reserved
			-	-	-	-	-	-	-	-
		PORTSEL	-	-	-	-	-	-	-	-
PPG68PPGAGATE (0x2480)	PPG68_PPGA Gate	RESSEL	1	RLT1_TOT	RLT2_TOT	RLT3_TOT	RLT4_TOT	RLT5_TOT	RLT6_TOT	RLT7_TOT
			-	-	-	-	-	-	-	-
		PORTSEL	-	-	-	-	-	-	-	-

Table 21. Resource Input Source Table (RICFG1) (Continued)

Register (Offset)	Resource Input	RESSEL[3:0]/ PORTSEL[3:0]	Source for Resource Input							
			0	1	2	3	4	5	6	7
			8	9	10	11	12	13	14	15
PPG68PPGAGM (0x2482)	PPG68_PPGA GateMode	RESSEL	Async	Sync	reserved	reserved	reserved	reserved	reserved	reserved
			-	-	-	-	-	-	-	-
		PORTSEL	-	-	-	-	-	-	-	-
PPG68PPGB-GATE (0x2484)	PPG68_PPGB Gate	RESSEL	1	RLT1_TOT	RLT2_TOT	RLT3_TOT	RLT4_TOT	RLT5_TOT	RLT6_TOT	RLT7_TOT
			-	-	-	-	-	-	-	-
		PORTSEL	-	-	-	-	-	-	-	-
PPG68PPGB-GM (0x2486)	PPG68_PPGB GateMode	RESSEL	Async	Sync	reserved	reserved	reserved	reserved	reserved	reserved
			-	-	-	-	-	-	-	-
		PORTSEL	-	-	-	-	-	-	-	-
PPG69PPGA GATE (0x24A0)	PPG69_PPGA Gate	RESSEL	1	RLT1_TOT	RLT2_TOT	RLT3_TOT	RLT4_TOT	RLT5_TOT	RLT6_TOT	RLT7_TOT
			-	-	-	-	-	-	-	-
		PORTSEL	-	-	-	-	-	-	-	-
PPG69PPGAGM (0x24A2)	PPG69_PPGA GateMode	RESSEL	Async	Sync	reserved	reserved	reserved	reserved	reserved	reserved
			-	-	-	-	-	-	-	-
		PORTSEL	-	-	-	-	-	-	-	-
PPG69PPGB-GATE (0x24A4)	PPG69_PPGB Gate	RESSEL	1	RLT1_TOT	RLT2_TOT	RLT3_TOT	RLT4_TOT	RLT5_TOT	RLT6_TOT	RLT7_TOT
			-	-	-	-	-	-	-	-
		PORTSEL	-	-	-	-	-	-	-	-
PPG69PPGB-GM (0x24A6)	PPG69_PPGB GateMode	RESSEL	Async	Sync	reserved	reserved	reserved	reserved	reserved	reserved
			-	-	-	-	-	-	-	-
		PORTSEL	-	-	-	-	-	-	-	-
PPG70PPGA GATE (0x24C0)	PPG70_PPGA Gate	RESSEL	1	RLT1_TOT	RLT2_TOT	RLT3_TOT	RLT4_TOT	RLT5_TOT	RLT6_TOT	RLT7_TOT
			-	-	-	-	-	-	-	-
		PORTSEL	-	-	-	-	-	-	-	-
PPG70PPGAGM (0x24C2)	PPG70_PPGA GateMode	RESSEL	Async	Sync	reserved	reserved	reserved	reserved	reserved	reserved
			-	-	-	-	-	-	-	-
		PORTSEL	-	-	-	-	-	-	-	-
PPG70PPGB-GATE (0x24C4)	PPG70_PPGB Gate	RESSEL	1	RLT1_TOT	RLT2_TOT	RLT3_TOT	RLT4_TOT	RLT5_TOT	RLT6_TOT	RLT7_TOT
			-	-	-	-	-	-	-	-
		PORTSEL	-	-	-	-	-	-	-	-
PPG70PPGB-GM (0x24C6)	PPG70_PPGB GateMode	RESSEL	Async	Sync	reserved	reserved	reserved	reserved	reserved	reserved
			-	-	-	-	-	-	-	-
		PORTSEL	-	-	-	-	-	-	-	-
PPG71PPGA GATE (0x24E0)	PPG71_PPGA Gate	RESSEL	1	RLT1_TOT	RLT2_TOT	RLT3_TOT	RLT4_TOT	RLT5_TOT	RLT6_TOT	RLT7_TOT
			-	-	-	-	-	-	-	-
		PORTSEL	-	-	-	-	-	-	-	-

Table 21. Resource Input Source Table (RICFG1) (Continued)

Register (Offset)	Resource Input	RESSEL[3:0]/ PORTSEL[3:0]	Source for Resource Input							
			0	1	2	3	4	5	6	7
			8	9	10	11	12	13	14	15
PPG71PPGAGM (0x24E2)	PPG71_PPGA GateMode	RESSEL	Async	Sync	reserved	reserved	reserved	reserved	reserved	reserved
			-	-	-	-	-	-	-	-
		PORTSEL	-	-	-	-	-	-	-	-
PPG71PPGB-GATE (0x24E4)	PPG71_PPGB Gate	RESSEL	1	RLT1_TOT	RLT2_TOT	RLT3_TOT	RLT4_TOT	RLT5_TOT	RLT6_TOT	RLT7_TOT
			-	-	-	-	-	-	-	-
		PORTSEL	-	-	-	-	-	-	-	-
PPG71PPGB-GM (0x24E6)	PPG71_PPGB GateMode	RESSEL	Async	Sync	reserved	reserved	reserved	reserved	reserved	reserved
			-	-	-	-	-	-	-	-
		PORTSEL	-	-	-	-	-	-	-	-

Table 22. Resource Input Source Table (RICFG3)

Register (offset)	Resource Input	RESSEL[3:0]/ PORTSEL[3:0]	Source for Resource Input							
			0	1	2	3	4	5	6	7
			8	9	10	11	12	13	14	15
RLT0TIN (0x0800)	RLT0_TIN	RESSEL	Port Sel	RLT9_TOT	RLT9_UF-SET	RLT1_TOT	PPG0_PPGA	MCLKDIV4	RCCLKDIV4	reserved
			-	-	-	-	-	-	-	-
		PORTSEL	reserved	P0_47	reserved	P1_11	P2_43	P3_28	reserved	reserved
			reserved	reserved	reserved	reserved	reserved	reserved	reserved	reserved
RLT1TIN (0x0820)	RLT1_TIN	RESSEL	Port Sel	RLT0_TOT	RLT0_UF-SET	RLT2_TOT	PPG1_PPGA	MCLKDIV4	RCCLKDIV4	reserved
			-	-	-	-	-	-	-	-
		PORTSEL	reserved	P0_51	reserved	P1_15	P2_39	P3_24	reserved	reserved
			reserved	reserved	reserved	reserved	reserved	reserved	reserved	reserved
RLT2TIN (0x0840)	RLT2_TIN	RESSEL	Port Sel	RLT1_TOT	RLT1_UF-SET	RLT3_TOT	PPG2_PPGA	MCLKDIV4	RCCLKDIV4	reserved
			-	-	-	-	-	-	-	-
		PORTSEL	reserved	P0_43	reserved	P1_19	P2_35	P3_12	reserved	reserved
			reserved	reserved	reserved	reserved	reserved	reserved	reserved	reserved
RLT3TIN (0x0860)	RLT3_TIN	RESSEL	Port Sel	RLT2_TOT	RLT2_UF-SET	RLT4_TOT	PPG3_PPGA	MCLKDIV4	RCCLKDIV4	reserved
			-	-	-	-	-	-	-	-
		PORTSEL	reserved	P0_45	P1_30	reserved	P1_08	P3_04	reserved	reserved
			reserved	reserved	reserved	reserved	reserved	reserved	reserved	reserved
RLT4TIN (0x0880)	RLT4_TIN	RESSEL	Port Sel	RLT3_TOT	RLT3_UF-SET	RLT5_TOT	PPG4_PPGA	US-ART0_SOT	US-ART6_SOT	reserved
			-	-	-	-	-	-	-	-
		PORTSEL	reserved	P0_46	P1_31	reserved	P1_09	P3_05	reserved	reserved
			reserved	reserved	reserved	reserved	reserved	reserved	reserved	reserved

Table 22. Resource Input Source Table (RICFG3) (Continued)

Register (offset)	Resource Input	RESSEL[3:0]/ PORTSEL[3:0]	Source for Resource Input							
			0	1	2	3	4	5	6	7
			8	9	10	11	12	13	14	15
RLT5TIN (0x08A0)	RLT5_TIN	RESSEL	Port Sel	RLT4_TOT	RLT4_UF-SET	RLT6_TOT	PPG5_PPGA	US-ART0_SOT	US-ART6_SOT	reserved
			-	-	-	-	-	-	-	-
		PORTSEL	reserved	P0_40	reserved	reserved	P1_12	P3_00	P3_30	reserved
			reserved	reserved	reserved	reserved	reserved	reserved	reserved	reserved
RLT6TIN (0x08C0)	RLT6_TIN	RESSEL	Port Sel	RLT5_TOT	RLT5_UF-SET	RLT7_TOT	PPG6_PPGA	UDC0_UDOT0	UDC0_UDOT1	reserved
			-	-	-	-	-	-	-	-
		PORTSEL	reserved	P0_41	reserved	P1_13	P3_01	reserved	reserved	reserved
			reserved	reserved	reserved	reserved	reserved	reserved	reserved	reserved
RLT7TIN (0x08E0)	RLT7_TIN	RESSEL	Port Sel	RLT6_TOT	RLT6_UF-SET	RLT8_TOT	PPG7_PPGA	UDC0_UDOT0	UDC0_UDOT1	reserved
			-	-	-	-	-	-	-	-
		PORTSEL	reserved	reserved	reserved	P2_38	P2_45	reserved	reserved	reserved
			reserved	reserved	reserved	reserved	reserved	reserved	reserved	reserved
RLT8TIN (0x0900)	RLT8_TIN	RESSEL	Port Sel	RLT7_TOT	RLT7_UF-SET	RLT9_TOT	PPG8_PPGA	UDC0_UDOT0	UDC0_UDOT1	reserved
			-	-	-	-	-	-	-	-
		PORTSEL	reserved	reserved	reserved	P2_37	P2_41	reserved	reserved	reserved
			reserved	reserved	reserved	reserved	reserved	reserved	reserved	reserved
RLT9TIN (0x0920)	RLT9_TIN	RESSEL	Port Sel	RLT8_TOT	RLT8_UF-SET	RLT0_TOT	PPG9_PPGA	UDC0_UDOT0	UDC0_UDOT1	reserved
			-	-	-	-	-	-	-	-
		PORTSEL	reserved	reserved	reserved	P2_36	P2_42	reserved	reserved	reserved
			reserved	reserved	reserved	reserved	reserved	reserved	reserved	reserved
UDC0AIN0 (0x1000)	UDC0_AIN0	RESSEL	Port Sel	RLT0_TOT	RLT3_TOT	RLT7_TOT	reserved	reserved	reserved	reserved
			-	-	-	-	-	-	-	-
		PORTSEL	reserved	reserved	P1_34	reserved	P0_44	P2_33	P3_14	P3_34
			reserved	reserved	reserved	reserved	reserved	reserved	reserved	reserved
UDC0AIN1 (0x1004)	UDC0_AIN1	RESSEL	Port Sel	RLT1_TOT	RLT4_TOT	RLT7_TOT	reserved	reserved	reserved	reserved
			-	-	-	-	-	-	-	-
		PORTSEL	reserved	reserved	reserved	reserved	P0_48	P2_37	P3_04	P3_18
			P3_38	reserved	reserved	reserved	reserved	reserved	reserved	reserved
UDC0BIN0 (0x1008)	UDC0_BIN0	RESSEL	Port Sel	RLT1_TOT	RLT4_TOT	RLT8_TOT	reserved	reserved	reserved	reserved
			-	-	-	-	-	-	-	-
		PORTSEL	reserved	reserved	P1_35	reserved	P0_45	P2_34	P3_15	P3_35
			reserved	reserved	reserved	reserved	reserved	reserved	reserved	reserved
UDC0BIN1 (0x100C)	UDC0_BIN1	RESSEL	Port Sel	RLT2_TOT	RLT5_TOT	RLT8_TOT	reserved	reserved	reserved	reserved
			-	-	-	-	-	-	-	-
		PORTSEL	reserved	reserved	reserved	reserved	P0_49	P2_38	P3_05	P3_19
			P3_39	reserved	reserved	reserved	reserved	reserved	reserved	reserved

Table 22. Resource Input Source Table (RICFG3) (Continued)

Register (offset)	Resource Input	RESSEL[3:0]/ PORTSEL[3:0]	Source for Resource Input							
			0	1	2	3	4	5	6	7
			8	9	10	11	12	13	14	15
UDC0ZIN0 (0x1010)	UDC0_ZIN0	RESSEL	Port Sel	RLT2_TOT	RLT5_TOT	RLT9_TOT	PPG0_PPGA	PPG1_PPGA	PPG2_PPGA	PPG3_PPGA
			-	-	-	-	-	-	-	-
		PORTSEL	reserved	reserved	P1_36	reserved	P0_46	P2_35	P3_16	P3_36
			reserved	reserved	reserved	reserved	reserved	reserved	reserved	reserved
UDC0ZIN1 (0x1014)	UDC0_ZIN1	RESSEL	Port Sel	RLT3_TOT	RLT6_TOT	RLT9_TOT	PPG0_PPGA	PPG1_PPGA	PPG2_PPGA	PPG3_PPGA
			-	-	-	-	-	-	-	-
		PORTSEL	reserved	reserved	reserved	reserved	P0_50	P2_39	P3_06	P3_20
			P3_40	reserved	reserved	reserved	reserved	reserved	reserved	reserved

Table 23. Resource Input Source Table (RICFG4)

Register (offset)	Resource Input	RESSEL[3:0]/ PORTSEL[3:0]	Source for Resource Input							
			0	1	2	3	4	5	6	7
			8	9	10	11	12	13	14	15
I2S0ECLK (0x1000)	I2S0_ECLK	RESSEL	Port Sel	SPECIAL0_-CLK_PERI1	reserved	reserved	reserved	reserved	reserved	reserved
			-	-	-	-	-	-	-	-
		PORTSEL	reserved	reserved	reserved	P1_24	P2_32	P2_36	P2_40	P3_33
			reserved	reserved	reserved	reserved	reserved	reserved	reserved	reserved
I2S0SCKI (0x1004)	I2S0_SCKI	RESSEL	-	-	-	-	-	-	-	-
			-	-	-	-	-	-	-	-
		PORTSEL	reserved	reserved	reserved	P2_35	P2_39	P2_43	P3_36	reserved
			reserved	reserved	reserved	reserved	reserved	reserved	reserved	reserved
I2S0SDI (0x1008)	I2S0_SDI	RESSEL	-	-	-	-	-	-	-	-
			-	-	-	-	-	-	-	-
		PORTSEL	reserved	reserved	reserved	P2_33	P2_37	P2_41	P3_34	reserved
			reserved	reserved	reserved	reserved	reserved	reserved	reserved	reserved
I2S0WSI (0x100C)	I2S0_WSI	RESSEL	-	-	-	-	-	-	-	-
			-	-	-	-	-	-	-	-
		PORTSEL	reserved	reserved	reserved	P2_34	P2_38	P2_42	P3_35	reserved
			reserved	reserved	reserved	reserved	reserved	reserved	reserved	reserved
I2S1ECLK (0x1020)	I2S1_ECLK	RESSEL	Port Sel	SPECIAL0_-CLK_PERI1	reserved	reserved	reserved	reserved	reserved	reserved
			-	-	-	-	-	-	-	-
		PORTSEL	reserved	reserved	reserved	P1_24	P2_32	P2_36	P2_44	P3_37
			reserved	reserved	reserved	reserved	reserved	reserved	reserved	reserved

Table 23. Resource Input Source Table (RICFG4) (Continued)

Register (offset)	Resource Input	RESSEL[3:0]/ PORTSEL[3:0]	Source for Resource Input							
			0	1	2	3	4	5	6	7
			8	9	10	11	12	13	14	15
I2S1SCKI (0x1024)	I2S1_SCKI	RESSEL	-	-	-	-	-	-	-	-
			-	-	-	-	-	-	-	-
		PORTSEL	reserved	reserved	P1_27	P2_35	P2_39	P2_47	P3_40	reserved
			reserved	reserved	reserved	reserved	reserved	reserved	reserved	reserved
I2S1SDI (0x1028)	I2S1_SDI	RESSEL	-	-	-	-	-	-	-	-
			-	-	-	-	-	-	-	-
		PORTSEL	reserved	reserved	P1_25	P2_33	P2_37	P2_45	P3_38	reserved
			reserved	reserved	reserved	reserved	reserved	reserved	reserved	reserved
I2S1WSI (0x102C)	I2S1_WSI	RESSEL	-	-	-	-	-	-	-	-
			-	-	-	-	-	-	-	-
		PORTSEL	reserved	reserved	P1_26	P2_34	P2_38	P2_46	P3_39	reserved
			reserved	reserved	reserved	reserved	reserved	reserved	reserved	reserved
SPI0CLKI (0x1C00)	SPI0_CLKI	RESSEL	-	-	-	-	-	-	-	-
			-	-	-	-	-	-	-	-
		PORTSEL	reserved	reserved	P0_47	P1_11	P2_35	P2_43	P3_28	reserved
			reserved	reserved	reserved	reserved	reserved	reserved	reserved	reserved
SPI0DA-TA0I (0x1C04)	SPI0_DA-TA0I	RESSEL	-	-	-	-	-	-	-	-
			-	-	-	-	-	-	-	-
		PORTSEL	reserved	reserved	P0_46	P1_10	P2_34	P2_42	P3_27	reserved
			reserved	reserved	reserved	reserved	reserved	reserved	reserved	reserved
SPI0DA-TA1I (0x1C08)	SPI0_DA-TA1I	RESSEL	-	-	-	-	-	-	-	-
			-	-	-	-	-	-	-	-
		PORTSEL	reserved	reserved	P0_45	P1_09	P2_33	P2_41	P3_26	reserved
			reserved	reserved	reserved	reserved	reserved	reserved	reserved	reserved
SPI0DA-TA2I (0x1C0C)	SPI0_DA-TA2I	RESSEL	-	-	-	-	-	-	-	-
			-	-	-	-	-	-	-	-
		PORTSEL	reserved	P0_48	P3_29	reserved	reserved	reserved	reserved	reserved
			reserved	reserved	reserved	reserved	reserved	reserved	reserved	reserved
SPI0DA-TA3I (0x1C10)	SPI0_DA-TA3I	RESSEL	-	-	-	-	-	-	-	-
			-	-	-	-	-	-	-	-
		PORTSEL	reserved	P0_50	P3_30	reserved	reserved	reserved	reserved	reserved
			reserved	reserved	reserved	reserved	reserved	reserved	reserved	reserved
SPI0MSTART (0x1C14)	SPI0_M-START	RESSEL	RLT0_TOT	RLT3_TOT	RLT6_TOT	RLT9_TOT	PPG64_P-PGB	OCU16_OTD0	reserved	reserved
			-	-	-	-	-	-	-	-
		PORTSEL	-	-	-	-	-	-	-	-

Table 23. Resource Input Source Table (RICFG4) (Continued)

Register (offset)	Resource Input	RESSEL[3:0]/ PORTSEL[3:0]	Source for Resource Input							
			0	1	2	3	4	5	6	7
			8	9	10	11	12	13	14	15
SPI0SSI (0x1C18)	SPI0_SSI	RESSEL	-	-	-	-	-	-	-	-
			-	-	-	-	-	-	-	-
		PORTSEL	reserved	reserved	P0_44	P1_08	P2_32	P2_40	P3_25	reserved
			reserved	reserved	reserved	reserved	reserved	reserved	reserved	reserved
SPI1CLKI (0x1C20)	SPI1_CLKI	RESSEL	-	-	-	-	-	-	-	-
			-	-	-	-	-	-	-	-
		PORTSEL	reserved	reserved	P0_51	P1_15	P2_39	P2_43	P3_24	reserved
			reserved	reserved	reserved	reserved	reserved	reserved	reserved	reserved
SPI1DA-TA0I (0x1C24)	SPI1_DA-TA0I	RESSEL	-	-	-	-	-	-	-	-
			-	-	-	-	-	-	-	-
		PORTSEL	reserved	reserved	P0_50	P1_14	P2_38	P2_42	P3_23	reserved
			reserved	reserved	reserved	reserved	reserved	reserved	reserved	reserved
SPI1DA-TA1I (0x1C28)	SPI1_DA-TA1I	RESSEL	-	-	-	-	-	-	-	-
			-	-	-	-	-	-	-	-
		PORTSEL	reserved	reserved	P0_49	P1_13	P2_37	P2_41	P3_22	reserved
			reserved	reserved	reserved	reserved	reserved	reserved	reserved	reserved
SPI1DA-TA2I (0x1C2C)	SPI1_DA-TA2I	RESSEL	-	-	-	-	-	-	-	-
			-	-	-	-	-	-	-	-
		PORTSEL	reserved	reserved	P2_32	P3_19	reserved	reserved	reserved	reserved
			reserved	reserved	reserved	reserved	reserved	reserved	reserved	reserved
SPI1DA-TA3I (0x1C30)	SPI1_DA-TA3I	RESSEL	-	-	-	-	-	-	-	-
			-	-	-	-	-	-	-	-
		PORTSEL	reserved	reserved	P2_33	P3_20	reserved	reserved	reserved	reserved
			reserved	reserved	reserved	reserved	reserved	reserved	reserved	reserved
SPI1MSTART (0x1C34)	SPI1_M-START	RESSEL	RLT0_TOT	RLT3_TOT	RLT6_TOT	RLT9_TOT	PPG64_P-PGB	OCU16_OTD0	reserved	reserved
			-	-	-	-	-	-	-	-
		PORTSEL	-	-	-	-	-	-	-	-
SPI1SSI (0x1C38)	SPI1_SSI	RESSEL	-	-	-	-	-	-	-	-
			-	-	-	-	-	-	-	-
		PORTSEL	reserved	reserved	P0_48	P1_12	P2_36	P2_40	P3_21	reserved
			reserved	reserved	reserved	reserved	reserved	reserved	reserved	reserved
SPI2CLKI (0x1C40)	SPI2_CLKI	RESSEL	-	-	-	-	-	-	-	-
			-	-	-	-	-	-	-	-
		PORTSEL	reserved	reserved	P0_43	P1_19	P2_35	P2_39	P3_12	reserved
			reserved	reserved	reserved	reserved	reserved	reserved	reserved	reserved

Table 23. Resource Input Source Table (RICFG4) (Continued)

Register (offset)	Resource Input	RESSEL[3:0]/ PORTSEL[3:0]	Source for Resource Input							
			0	1	2	3	4	5	6	7
			8	9	10	11	12	13	14	15
SPI2DATA0I (0x1C44)	SPI2_DATA0I	RESSEL	-	-	-	-	-	-	-	-
			-	-	-	-	-	-	-	-
		PORTSEL	reserved	reserved	P0_42	P1_18	P2_34	P2_38	P3_11	reserved
			reserved	reserved	reserved	reserved	reserved	reserved	reserved	reserved
SPI2DATA1I (0x1C48)	SPI2_DATA1I	RESSEL	-	-	-	-	-	-	-	-
			-	-	-	-	-	-	-	-
		PORTSEL	reserved	reserved	P0_41	P1_17	P2_33	P2_37	P3_10	reserved
			reserved	reserved	reserved	reserved	reserved	reserved	reserved	reserved
SPI2DATA2I (0x1C4C)	SPI2_DATA2I	RESSEL	-	-	-	-	-	-	-	-
			-	-	-	-	-	-	-	-
		PORTSEL	reserved	P0_44	P3_13	reserved	reserved	reserved	reserved	reserved
			reserved	reserved	reserved	reserved	reserved	reserved	reserved	reserved
SPI2DATA3I (0x1C50)	SPI2_DATA3I	RESSEL	-	-	-	-	-	-	-	-
			-	-	-	-	-	-	-	-
		PORTSEL	reserved	P0_45	P3_14	reserved	reserved	reserved	reserved	reserved
			reserved	reserved	reserved	reserved	reserved	reserved	reserved	reserved
SPI2MSTART (0x1C54)	SPI2_MSTART	RESSEL	RLT0_TOT	RLT3_TOT	RLT6_TOT	RLT9_TOT	PPG64_PPGB	OCU16_OTD0	reserved	reserved
			-	-	-	-	-	-	-	-
		PORTSEL	-	-	-	-	-	-	-	-
SPI2SSI (0x1C58)	SPI2SSI	RESSEL	-	-	-	-	-	-	-	-
			-	-	-	-	-	-	-	-
		PORTSEL	reserved	reserved	P0_40	P1_16	P2_32	P2_36	P3_09	reserved
			reserved	reserved	reserved	reserved	reserved	reserved	reserved	reserved
ARH0AIC0RCK (0x2000)	ARH0_AIC0RCK	RESSEL	-	-	-	-	-	-	-	-
			-	-	-	-	-	-	-	-
		PORTSEL	reserved	reserved	P0_42	P1_01	P2_32	P3_25	reserved	reserved
			reserved	reserved	reserved	reserved	reserved	reserved	reserved	reserved
ARH0AIC0RDA0 (0x2004)	ARH0_AIC0RDA0	RESSEL	-	-	-	-	-	-	-	-
			-	-	-	-	-	-	-	-
		PORTSEL	reserved	reserved	P0_44	P1_03	P2_34	P3_27	reserved	reserved
			reserved	reserved	reserved	reserved	reserved	reserved	reserved	reserved
ARH0AIC0RDA1 (0x2008)	ARH0_AIC0RDA1	RESSEL	-	-	-	-	-	-	-	-
			-	-	-	-	-	-	-	-
		PORTSEL	reserved	reserved	P0_43	P1_02	P2_33	P3_26	reserved	reserved
			reserved	reserved	reserved	reserved	reserved	reserved	reserved	reserved

Table 23. Resource Input Source Table (RICFG4) (Continued)

Register (offset)	Resource Input	RESSEL[3:0]/ PORTSEL[3:0]	Source for Resource Input							
			0	1	2	3	4	5	6	7
			8	9	10	11	12	13	14	15
ARH0A-IC0TCKI (0x200C)	ARH0_A-IC0TCKI	RESSEL	-	-	-	-	-	-	-	-
			-	-	-	-	-	-	-	-
		PORTSEL	reserved	reserved	P0_41	P1_00	P2_35	P3_28	reserved	reserved
			reserved	reserved	reserved	reserved	reserved	reserved	reserved	reserved
ARH0A-IC0UPCLK (0x2010)	ARH0_A-IC0UPCLK	RESSEL	-	-	-	-	-	-	-	-
			-	-	-	-	-	-	-	-
		PORTSEL	P1_01	P2_32	P3_25	reserved	reserved	reserved	reserved	reserved
			reserved	reserved	reserved	reserved	reserved	reserved	reserved	reserved
ARH0A-IC0UPDA-TA0 (0x2014)	ARH0_A-IC0UPDA-TA0	RESSEL	-	-	-	-	-	-	-	-
			-	-	-	-	-	-	-	-
		PORTSEL	P1_03	P2_34	P3_27	reserved	reserved	reserved	reserved	reserved
			reserved	reserved	reserved	reserved	reserved	reserved	reserved	reserved
ARH0A-IC0UPDA-TA1 (0x2018)	ARH0_A-IC0UPDA-TA1	RESSEL	-	-	-	-	-	-	-	-
			-	-	-	-	-	-	-	-
		PORTSEL	P1_02	P2_33	P3_26	reserved	reserved	reserved	reserved	reserved
			reserved	reserved	reserved	reserved	reserved	reserved	reserved	reserved
ARH0A-IC0DBGSE-LECT (0x201C)	ARH0_A-IC0DBGSE-LECT	RESSEL	-	-	-	-	-	-	-	-
			-	-	-	-	-	-	-	-
		PORTSEL	P1_37	P1_10	reserved	reserved	reserved	reserved	reserved	reserved
			reserved	reserved	reserved	reserved	reserved	reserved	reserved	reserved
ARH0A-IC1RCK (0x2020)	ARH0_A-IC1RCK	RESSEL	-	-	-	-	-	-	-	-
			-	-	-	-	-	-	-	-
		PORTSEL	P1_25	reserved	P0_48	P1_21	P2_40	P3_15	reserved	reserved
			reserved	reserved	reserved	reserved	reserved	reserved	reserved	reserved
ARH0A-IC1RDA0 (0x2024)	ARH0_A-IC1RDA0	RESSEL	-	-	-	-	-	-	-	-
			-	-	-	-	-	-	-	-
		PORTSEL	P1_27	reserved	P0_50	P1_23	P2_42	P3_17	reserved	reserved
			reserved	reserved	reserved	reserved	reserved	reserved	reserved	reserved
ARH0A-IC1RDA1 (0x2028)	ARH0_A-IC1RDA1	RESSEL	-	-	-	-	-	-	-	-
			-	-	-	-	-	-	-	-
		PORTSEL	P1_26	reserved	P0_49	P1_22	P2_41	P3_16	reserved	reserved
			reserved	reserved	reserved	reserved	reserved	reserved	reserved	reserved
ARH0A-IC1TCKI (0x202C)	ARH0_A-IC1TCKI	RESSEL	-	-	-	-	-	-	-	-
			-	-	-	-	-	-	-	-
		PORTSEL	P1_24	reserved	P0_47	P1_20	P2_43	P3_18	reserved	reserved
			reserved	reserved	reserved	reserved	reserved	reserved	reserved	reserved

Table 23. Resource Input Source Table (RICFG4) (Continued)

Register (offset)	Resource Input	RESSEL[3:0]/ PORTSEL[3:0]	Source for Resource Input							
			0	1	2	3	4	5	6	7
			8	9	10	11	12	13	14	15
ARH0A-IC1UPCLK (0x2030)	ARH0_A-IC1UPCLK	RESSEL	-	-	-	-	-	-	-	-
			-	-	-	-	-	-	-	-
		PORTSEL	P1_21	P1_25	P2_40	P3_15	reserved	reserved	reserved	reserved
			reserved	reserved	reserved	reserved	reserved	reserved	reserved	reserved
ARH0A-IC1UPDA-TA0 (0x2034)	ARH0_A-IC1UPDA-TA0	RESSEL	-	-	-	-	-	-	-	-
			-	-	-	-	-	-	-	-
		PORTSEL	P1_23	P1_27	P2_42	P3_17	reserved	reserved	reserved	reserved
			reserved	reserved	reserved	reserved	reserved	reserved	reserved	reserved
ARH0A-IC1UPDA-TA1 (0x2038)	ARH0_A-IC1UPDA-TA1	RESSEL	-	-	-	-	-	-	-	-
			-	-	-	-	-	-	-	-
		PORTSEL	P1_22	P1_26	P2_41	P3_16	reserved	reserved	reserved	reserved
			reserved	reserved	reserved	reserved	reserved	reserved	reserved	reserved
ARH0A-IC1DBGSE-LECT (0x203C)	ARH0_A-IC1DBGSE-LECT	RESSEL	-	-	-	-	-	-	-	-
			-	-	-	-	-	-	-	-
		PORTSEL	reserved	P1_14	P3_07	reserved	reserved	reserved	reserved	reserved
			reserved	reserved	reserved	reserved	reserved	reserved	reserved	reserved

Table 24. Resource Input Source Table (RICFG7)

Register (offset)	Resource Input	RESSEL[3:0]/ PORTSEL[3:0]	Source for Resource Input							
			0	1	2	3	4	5	6	7
			8	9	10	11	12	13	14	15
GFX0DCLKI (0x0000)	GFX0_DCLKI	RESSEL	-	-	-	-	-	-	-	-
			-	-	-	-	-	-	-	-
		PORTSEL	P0_38	P1_30	P1_39	reserved	reserved	reserved	reserved	reserved
			reserved	reserved	reserved	reserved	reserved	reserved	reserved	reserved
EIC0INT00 (0x1000)	EIC0_INT00	RESSEL	-	-	-	-	-	-	-	-
			-	-	-	-	-	-	-	-
		PORTSEL	reserved	reserved	P0_63	P1_08	P3_08	reserved	reserved	reserved
			reserved	reserved	reserved	reserved	reserved	reserved	reserved	reserved
EIC0INT01 (0x1004)	EIC0_INT01	RESSEL	-	-	-	-	-	-	-	-
			-	-	-	-	-	-	-	-
		PORTSEL	reserved	P1_33	reserved	P1_09	P3_33	reserved	reserved	reserved
			reserved	reserved	reserved	reserved	reserved	reserved	reserved	reserved

Note
3. If this bit is set to “1”, the port is used for External NMI. The input receiver is enabled irrespective of Port register settings and the output driver is disabled irrespective of assigned resources.

Table 24. Resource Input Source Table (RICFG7) (Continued)

Register (offset)	Resource Input	RESSEL[3:0]/ PORTSEL[3:0]	Source for Resource Input							
			0	1	2	3	4	5	6	7
			8	9	10	11	12	13	14	15
EIC0INT02 (0x1008)	EIC0_INT02	RESSEL	-	-	-	-	-	-	-	-
			-	-	-	-	-	-	-	-
		PORTSEL	reserved	reserved	reserved	P1_10	P3_03	P3_10	reserved	reserved
			reserved	reserved	reserved	reserved	reserved	reserved	reserved	reserved
EIC0INT03 (0x100C)	EIC0_INT03	RESSEL	-	-	-	-	-	-	-	-
			-	-	-	-	-	-	-	-
		PORTSEL	reserved	reserved	P0_44	P1_11	P1_08	P2_32	P2_40	P3_25
			reserved	reserved	reserved	reserved	reserved	reserved	reserved	reserved
EIC0INT04 (0x1010)	EIC0_INT04	RESSEL	-	-	-	-	-	-	-	-
			-	-	-	-	-	-	-	-
		PORTSEL	reserved	reserved	P0_48	P1_12	P2_36	P2_40	P3_21	reserved
			reserved	reserved	reserved	reserved	reserved	reserved	reserved	reserved
EIC0INT05 (0x1014)	EIC0_INT05	RESSEL	-	-	-	-	-	-	-	-
			-	-	-	-	-	-	-	-
		PORTSEL	reserved	reserved	P0_40	P1_13	P1_16	P2_32	P2_36	P3_09
			reserved	reserved	reserved	reserved	reserved	reserved	reserved	reserved
EIC0INT06 (0x1018)	EIC0_INT06	RESSEL	-	-	-	-	-	-	-	-
			-	-	-	-	-	-	-	-
		PORTSEL	reserved	reserved	reserved	P1_14	P2_34	P2_38	P2_42	P3_35
			reserved	reserved	reserved	reserved	reserved	reserved	reserved	reserved
EIC0INT07 (0x101C)	EIC0_INT07	RESSEL	-	-	-	-	-	-	-	-
			-	-	-	-	-	-	-	-
		PORTSEL	reserved	reserved	P1_26	P1_15	P2_34	P2_38	P2_46	P3_39
			reserved	reserved	reserved	reserved	reserved	reserved	reserved	reserved
EIC0INT08 (0x1020)	EIC0_INT08	RESSEL	-	-	-	-	-	-	-	-
			-	-	-	-	-	-	-	-
		PORTSEL	reserved	reserved	reserved	P0_42	P0_48	P0_51	P1_34	P1_00
			P2_41	P2_44	P2_46	reserved	reserved	reserved	reserved	reserved
EIC0INT09 (0x1024)	EIC0_INT09	RESSEL	-	-	-	-	-	-	-	-
			-	-	-	-	-	-	-	-
		PORTSEL	reserved	reserved	reserved	P0_43	P0_48	P0_50	P1_36	P1_02
			P2_41	P2_45	P2_47	reserved	reserved	reserved	reserved	reserved
EIC0INT10 (0x1028)	EIC0_INT10	RESSEL	-	-	-	-	-	-	-	-
			-	-	-	-	-	-	-	-
		PORTSEL	reserved	reserved	reserved	P0_42	P0_49	P0_50	P1_38	P1_16
			P2_40	P2_45	P2_46	reserved	reserved	reserved	reserved	reserved

Note

3. If this bit is set to “1”, the port is used for External NMI. The input receiver is enabled irrespective of Port register settings and the output driver is disabled irrespective of assigned resources.

Table 24. Resource Input Source Table (RICFG7) (Continued)

Register (offset)	Resource Input	RESSEL[3:0]/ PORTSEL[3:0]	Source for Resource Input							
			0	1	2	3	4	5	6	7
			8	9	10	11	12	13	14	15
EIC0INT11 (0x102C)	EIC0_INT11	RESSEL	-	-	-	-	-	-	-	-
			-	-	-	-	-	-	-	-
		PORTSEL	reserved	reserved	reserved	P0_40	P0_45	P1_30	reserved	P0_42
			P1_08	P3_00	P3_02	P3_04	reserved	reserved	reserved	reserved
EIC0INT12 (0x1030)	EIC0_INT12	RESSEL	-	-	-	-	-	-	-	-
			-	-	-	-	-	-	-	-
		PORTSEL	reserved	reserved	reserved	P0_40	P0_45	reserved	P0_47	P1_12
			P3_00	P3_04	P3_06	reserved	reserved	reserved	reserved	reserved
EIC0INT13 (0x1034)	EIC0_INT13	RESSEL	-	-	-	-	-	-	-	-
			-	-	-	-	-	-	-	-
		PORTSEL	reserved	P1_37	P1_02	P1_16	reserved	reserved	reserved	reserved
			reserved	reserved	reserved	reserved	reserved	reserved	reserved	reserved
EIC0INT14 (0x1038)	EIC0_INT14	RESSEL	-	-	-	-	-	-	-	-
			-	-	-	-	-	-	-	-
		PORTSEL	reserved	reserved	reserved	P1_17	reserved	P3_11	P3_34	reserved
			reserved	reserved	reserved	reserved	reserved	reserved	reserved	reserved
EIC0INT15 (0x103C)	EIC0_INT15	RESSEL	-	-	-	-	-	-	-	-
			-	-	-	-	-	-	-	-
		PORTSEL	reserved	P0_41	reserved	P1_18	reserved	P3_12	reserved	reserved
			reserved	reserved	reserved	reserved	reserved	reserved	reserved	reserved
EIC0INT16 (0x1040)	EIC0_INT16	RESSEL	-	-	-	-	-	-	-	-
			-	-	-	-	-	-	-	-
		PORTSEL	reserved	P0_46	reserved	P1_19	reserved	P3_13	reserved	reserved
			reserved	reserved	reserved	reserved	reserved	reserved	reserved	reserved
EIC0INT17 (0x1044)	EIC0_INT17	RESSEL	-	-	-	-	-	-	-	-
			-	-	-	-	-	-	-	-
		PORTSEL	reserved	P0_47	reserved	P1_20	reserved	P3_14	reserved	reserved
			reserved	reserved	reserved	reserved	reserved	reserved	reserved	reserved
EIC0INT18 (0x1048)	EIC0_INT18	RESSEL	-	-	-	-	-	-	-	-
			-	-	-	-	-	-	-	-
		PORTSEL	reserved	reserved	reserved	P1_21	reserved	P3_15	P3_36	reserved
			reserved	reserved	reserved	reserved	reserved	reserved	reserved	reserved
EIC0INT19 (0x104C)	EIC0_INT19	RESSEL	-	-	-	-	-	-	-	-
			-	-	-	-	-	-	-	-
		PORTSEL	reserved	P1_24	reserved	P1_22	reserved	P3_16	P3_37	reserved
			reserved	reserved	reserved	reserved	reserved	reserved	reserved	reserved

Note

3. If this bit is set to “1”, the port is used for External NMI. The input receiver is enabled irrespective of Port register settings and the output driver is disabled irrespective of assigned resources.

Table 24. Resource Input Source Table (RICFG7) (Continued)

Register (offset)	Resource Input	RESSEL[3:0]/ PORTSEL[3:0]	Source for Resource Input							
			0	1	2	3	4	5	6	7
			8	9	10	11	12	13	14	15
EIC0INT20 (0x1050)	EIC0_INT20	RESSEL	-	-	-	-	-	-	-	-
			-	-	-	-	-	-	-	-
		PORTSEL	reserved	P1_25	reserved	P1_23	reserved	P3_17	P3_22	reserved
			reserved	reserved	reserved	reserved	reserved	reserved	reserved	reserved
EIC0INT21 (0x1054)	EIC0_INT21	RESSEL	-	-	-	-	-	-	-	-
			-	-	-	-	-	-	-	-
		PORTSEL	reserved	P1_27	reserved	reserved	reserved	P3_18	P3_23	reserved
			reserved	reserved	reserved	reserved	reserved	reserved	reserved	reserved
EIC0INT22 (0x1058)	EIC0_INT22	RESSEL	-	-	-	-	-	-	-	-
			-	-	-	-	-	-	-	-
		PORTSEL	reserved	P1_28	reserved	reserved	reserved	P3_19	P3_24	reserved
			reserved	reserved	reserved	reserved	reserved	reserved	reserved	reserved
EIC0INT23 (0x105C)	EIC0_INT23	RESSEL	-	-	-	-	-	-	-	-
			-	-	-	-	-	-	-	-
		PORTSEL	reserved	P1_29	reserved	reserved	reserved	P3_20	P3_38	reserved
			reserved	reserved	reserved	reserved	reserved	reserved	reserved	reserved
EIC0INT24 (0x1060)	EIC0_INT24	RESSEL	-	-	-	-	-	-	-	-
			-	-	-	-	-	-	-	-
		PORTSEL	reserved	P1_31	P0_62	reserved	reserved	P3_26	reserved	reserved
			reserved	reserved	reserved	reserved	reserved	reserved	reserved	reserved
EIC0INT25 (0x1064)	EIC0_INT25	RESSEL	-	-	-	-	-	-	-	-
			-	-	-	-	-	-	-	-
		PORTSEL	reserved	P1_32	P1_00	reserved	reserved	P3_27	reserved	reserved
			reserved	reserved	reserved	reserved	reserved	reserved	reserved	reserved
EIC0INT26 (0x1068)	EIC0_INT26	RESSEL	-	-	-	-	-	-	-	-
			-	-	-	-	-	-	-	-
		PORTSEL	reserved	P1_35	P1_01	reserved	reserved	P2_33	P3_28	reserved
			reserved	reserved	reserved	reserved	reserved	reserved	reserved	reserved
EIC0INT27 (0x106C)	EIC0_INT27	RESSEL	-	-	-	-	-	-	-	-
			-	-	-	-	-	-	-	-
		PORTSEL	reserved	reserved	P1_03	reserved	reserved	P3_01	P3_29	P3_31
			reserved	reserved	reserved	reserved	reserved	reserved	reserved	reserved
EIC0INT28 (0x1070)	EIC0_INT28	RESSEL	-	-	-	-	-	-	-	-
			-	-	-	-	-	-	-	-
		PORTSEL	reserved	reserved	P1_04	reserved	reserved	P3_02	P3_30	P3_32
			reserved	reserved	reserved	reserved	reserved	reserved	reserved	reserved

Note

3. If this bit is set to “1”, the port is used for External NMI. The input receiver is enabled irrespective of Port register settings and the output driver is disabled irrespective of assigned resources.

Table 24. Resource Input Source Table (RICFG7) (Continued)

Register (offset)	Resource Input	RESSEL[3:0]/ PORTSEL[3:0]	Source for Resource Input							
			0	1	2	3	4	5	6	7
			8	9	10	11	12	13	14	15
EIC0INT29 (0x1074)	EIC0_INT29	RESSEL	-	-	-	-	-	-	-	-
			-	-	-	-	-	-	-	-
		PORTSEL	reserved	reserved	P1_05	reserved	P2_35	P3_05	P3_40	reserved
			reserved	reserved	reserved	reserved	reserved	reserved	reserved	reserved
EIC0INT30 (0x1078)	EIC0_INT30	RESSEL	-	-	-	-	-	-	-	-
			-	-	-	-	-	-	-	-
		PORTSEL	reserved	reserved	P1_06	reserved	P2_37	P3_06	P3_41	reserved
			reserved	reserved	reserved	reserved	reserved	reserved	reserved	reserved
EIC0INT31 (0x107C)	EIC0_INT31	RESSEL	-	-	-	-	-	-	-	-
			-	-	-	-	-	-	-	-
		PORTSEL	reserved	reserved	P1_07	reserved	P2_39	P3_07	P3_42	reserved
			reserved	reserved	reserved	reserved	reserved	reserved	reserved	reserved
EIC0NMI (0x1080)	EIC0_NMI	RESSEL	-	-	-	-	-	-	-	-
			-	-	-	-	-	-	-	-
		PORTSEL	reserved	reserved	reserved	reserved	reserved	reserved	reserved	reserved
			P2_23 [3]	reserved	reserved	reserved	reserved	reserved	reserved	reserved

Note
3. If this bit is set to “1”, the port is used for External NMI. The input receiver is enabled irrespective of Port register settings and the output driver is disabled irrespective of assigned resources.

Table 25. Resource Input Source Table (RICFG8)

Register (Offset)	Resource Input	RESSEL[3:0]/ PORTSEL[3:0]	Source for Resource Input							
			0	1	2	3	4	5	6	7
			8	9	10	11	12	13	14	15
HSS-PI0MSTART (0x0000)	HSSPI0_MSTART	RESSEL	RLT0_TOT	RLT3_TOT	RLT6_TOT	RLT9_TOT	PPG64_PPGB	OCU16_OTD0	reserved	reserved
			-	-	-	-	-	-	-	-
		PORTSEL	-	-	-	-	-	-	-	-

Interrupt / DMA

This section provides the allocation of interrupt and interrupt vector/interrupt register.

Table 26. Interrupt Table

Interrupt Line No	Interrupt Name	Interrupt Description
0	SYSCIRQ	Status Interrupt from System Controller (SYSC_SYSSTSR:RUNDN is set when current RUN Profile was successfully applied)
1	WDGIRQ	Watchdog pre-warning Interrupt (WDG_INT:IRQ_FLAG is set when watchdog error condition is detected (missing or wrong WDG clearing procedure))
13	ARH0IRQ0	APIX Remote Handler IRQ0 (Event IRQ ARH0_EVIRQC:EVIRQ, Event Buffer fifo Level ARH0_EVIRQC:LVIRQ, Event Buffer fifo overflow ARH0_EVIRQC:OFLIRQ, AShell fatal error ARH0_CHCTRL0~1:FATIRQ, watchdog timer (TX) ARH0_CHWDGCTL0~1:WDTXIRQ0~3 and (RX) ARH0_CHWDGCTL0~1:WDRXIRQ0~3)
14	ARH0IRQ1	APIX Remote Handler IRQ1 (Transaction Buffer Interrupt ARH0_TBCTRL00~15:TBIRQ)
30	ADC0IRQ	ADC0 Conversion End Interrupt (ADC0_CS1:INT signals end of conversion for current channel (this flag is mirrored in ADC0_CS3:INT))
31	ADC0IRQ2	ADC0 Scan End Interrupt (ADC0_CS3:INT2 is set when the current scan over selected channels has finished)
32	ADC0IRQR	ADC0 Range Comparator Interrupt (ADC0_RCOINT10~32:RCOINT[15:0] are set when corresponding ADC result is outside selected range (check ADC0_RCOOF10~32:RCOOF[15:0] and the selected mode ADC0_RCOIRS10~32:RCOIRS[15:0] for interrupt cause)
33	ADC0IRQP	ADC0 Pulse Detection Interrupt (ADC0_PCZF10~32:CTPZF[15:0] are set when corresponding pulse counter becomes zero)
34	RRCFGIRQERR	Retention RAM Single Bit Error (RRCFG_CSR:CEIF is set when a correctable error occurred during any read access to Retention RAM)
35	SRCFGIRQERR	System RAM Single Bit Error (SRCFG_ERRFLG:SECFLG is set when a correctable error occurred during any read access to SRAM)
36	TCCFGIRQ	Instruction Flash Write Completion Interrupt (TCFCFG_FSTATn:RDYINT is set on the rising edge of TCFCFG_FSTATn:RDY flag Instruction Flash Hang Interrupt (TCFCFG_FSTATn:HANGINT is set when a hang condition occurs in Instruction Flash) Instruction Flash Single Bit Error (TCFCFG_FSECIR:SECINT is set when a correctable error occurred during any read access to Instruction Flash)
37	EECFGIRQERR	Data Flash Error Interrupt (EEFCFG_SR:ERRINT is set if the write command sequencer is disabled in ongoing operation or if any write error occurs during ongoing transfer) Data Flash Hang Interrupt (EEFCFG_SR:HANGINT is set when a hang condition occurs in Data Flash)
38	IRQ0IRQERR	IUNIT Vector RAM Single Bit Error (IRQ0_EEI:EEIS is set when a correctable error occurred during any read access to Interrupt Controller RAM)
41	EECFGIRQ	Data Flash Write Completion Interrupt (EEFCFG_SR:RDYINT is set on the rising edge of EEFCFG_SR:RDY flag) Data Flash Single Bit Error (EEFCFG_SECIR:SECINT is set when a correctable error occurred during any read access to Data Flash)
42	EICU0IRQ	External Interrupt Capture Unit 0 Interrupt (EICU0_CNFGR:DATAVALID is set when 256 samples have been taken at the selected external interrupt input pin)
43	HSSPI0IRQRX	HSSPI0 Receive Interrupt (check HSSPI0_RXF:[6:0] for detailed RX interrupt cause)
44	HSSPI0IRQTX	HSSPI0 Transmit Interrupt (check HSSPI0_TXF:[6:0] for detailed TX interrupt cause)
49	SPI0IRQRX	SPI0 Receive Interrupt (check SPI0_RXF:[6:0] for detailed RX interrupt cause)
50	SPI0IRQTX	SPI0 Transmit Interrupt (check SPI0_TXF:[6:0] for detailed TX interrupt cause)
52	SPI1IRQRX	SPI1 Receive Interrupt (check SPI1_RXF:[6:0] for detailed RX interrupt cause)
53	SPI1IRQTX	SPI1 Transmit Interrupt (check SPI1_TXF:[6:0] for detailed TX interrupt cause)

Table 26. Interrupt Table (Continued)

Interrupt Line No	Interrupt Name	Interrupt Description
55	SPI2IRQRX	SPI2 Receive Interrupt (check SPI2_RXF:[6:0] for detailed RX interrupt cause)
56	SPI2IRQTX	SSPI2 Transmit Interrupt (check SPI2_TXF:[6:0] for detailed TX interrupt cause)
61	CAN0IRQ	CAN0 Interrupt (this interrupt is called depending on CTRLR0:EIE, CTRLR0:SIE and the corresponding transmit/receive interrupt enable flags in the message objects TXE/RXE)
62	CAN1IRQ	CAN1 Interrupt (this interrupt is called depending on CTRLR1:EIE, CTRLR1:SIE and the corresponding transmit/receive interrupt enable flags in the message objects TXE/RXE)
63	CAN2IRQ	CAN2 Interrupt (this interrupt is called depending on CTRLR2:EIE, CTRLR2:SIE and the corresponding transmit/receive interrupt enable flags in the message objects TXE/RXE)
69	EIC0IRQ0	External Interrupt 0 (EIC0_EIRR:ER0 is set when an interrupt condition is detected at the corresponding input pin)
70	EIC0IRQ1	External Interrupt 1 (EIC0_EIRR:ER1 is set when an interrupt condition is detected at the corresponding input pin)
71	EIC0IRQ2	External Interrupt 2 (EIC0_EIRR:ER2 is set when an interrupt condition is detected at the corresponding input pin)
72	EIC0IRQ3	External Interrupt 3 (EIC0_EIRR:ER3 is set when an interrupt condition is detected at the corresponding input pin)
73	EIC0IRQ4	External Interrupt 4 (EIC0_EIRR:ER4 is set when an interrupt condition is detected at the corresponding input pin)
74	EIC0IRQ5	External Interrupt 5 (EIC0_EIRR:ER5 is set when an interrupt condition is detected at the corresponding input pin)
75	EIC0IRQ6	External Interrupt 6 (EIC0_EIRR:ER6 is set when an interrupt condition is detected at the corresponding input pin)
76	EIC0IRQ7	External Interrupt 7 (EIC0_EIRR:ER7 is set when an interrupt condition is detected at the corresponding input pin)
77	EIC0IRQ8	External Interrupt 8 (EIC0_EIRR:ER8 is set when an interrupt condition is detected at the corresponding input pin)
78	EIC0IRQ9	External Interrupt 9 (EIC0_EIRR:ER9 is set when an interrupt condition is detected at the corresponding input pin)
79	EIC0IRQ10	External Interrupt 10 (EIC0_EIRR:ER10 is set when an interrupt condition is detected at the corresponding input pin)
80	EIC0IRQ11	External Interrupt 11 (EIC0_EIRR:ER11 is set when an interrupt condition is detected at the corresponding input pin)
81	EIC0IRQ12	External Interrupt 12 (EIC0_EIRR:ER12 is set when an interrupt condition is detected at the corresponding input pin)
82	EIC0IRQ13	External Interrupt 13 (EIC0_EIRR:ER13 is set when an interrupt condition is detected at the corresponding input pin)
83	EIC0IRQ14	External Interrupt 14 (EIC0_EIRR:ER14 is set when an interrupt condition is detected at the corresponding input pin)
84	EIC0IRQ15	External Interrupt 15 (EIC0_EIRR:ER15 is set when an interrupt condition is detected at the corresponding input pin)
85	EIC0IRQ16	External Interrupt 16 (EIC0_EIRR:ER16 is set when an interrupt condition is detected at the corresponding input pin)
86	EIC0IRQ17	External Interrupt 17 (EIC0_EIRR:ER17 is set when an interrupt condition is detected at the corresponding input pin)
87	EIC0IRQ18	External Interrupt 18 (EIC0_EIRR:ER18 is set when an interrupt condition is detected at the corresponding input pin)
88	EIC0IRQ19	External Interrupt 19 (EIC0_EIRR:ER19 is set when an interrupt condition is detected at the corresponding input pin)
89	EIC0IRQ20	External Interrupt 20 (EIC0_EIRR:ER20 is set when an interrupt condition is detected at the corresponding input pin)
90	EIC0IRQ21	External Interrupt 21 (EIC0_EIRR:ER21 is set when an interrupt condition is detected at the corresponding input pin)
91	EIC0IRQ22	External Interrupt 22 (EIC0_EIRR:ER22 is set when an interrupt condition is detected at the corresponding input pin)
92	EIC0IRQ23	External Interrupt 23 (EIC0_EIRR:ER23 is set when an interrupt condition is detected at the corresponding input pin)
93	EIC0IRQ24	External Interrupt 24 (EIC0_EIRR:ER24 is set when an interrupt condition is detected at the corresponding input pin)
94	EIC0IRQ25	External Interrupt 25 (EIC0_EIRR:ER25 is set when an interrupt condition is detected at the corresponding input pin)
95	EIC0IRQ26	External Interrupt 26 (EIC0_EIRR:ER26 is set when an interrupt condition is detected at the corresponding input pin)
96	EIC0IRQ27	External Interrupt 27 (EIC0_EIRR:ER27 is set when an interrupt condition is detected at the corresponding input pin)
97	EIC0IRQ28	External Interrupt 28 (EIC0_EIRR:ER28 is set when an interrupt condition is detected at the corresponding input pin)
98	EIC0IRQ29	External Interrupt 29 (EIC0_EIRR:ER29 is set when an interrupt condition is detected at the corresponding input pin)
99	EIC0IRQ30	External Interrupt 30 (EIC0_EIRR:ER30 is set when an interrupt condition is detected at the corresponding input pin)
100	EIC0IRQ31	External Interrupt 31 (EIC0_EIRR:ER31 is set when an interrupt condition is detected at the corresponding input pin)

Table 26. Interrupt Table (Continued)

Interrupt Line No	Interrupt Name	Interrupt Description
101	RTCIRQ	Real Time Clock Interrupt (check RTC_WINS:[6:0] for detailed Real Time Clock interrupt cause)
102	SG0IRQ	Sound Generator 0 Interrupt (SG0_CR1:ZAINT (zero amplitude interrupt), SG0_CR1:TCINT (tone pulse count interrupt), SG0_CR1:AMINT (amplitude match interrupt))
104	FRT0IRQ	Free Running Timer 0 Interrupt (FRT0_TCCS:IVF (compare clear match/counter overflow), FRT0_ETCCS:IRQZF (counter zero detection))
105	FRT1IRQ	Free Running Timer 1 Interrupt (FRT1_TCCS:IVF (compare clear match/counter overflow), FRT1_ETCCS:IRQZF (counter zero detection))
106	FRT2IRQ	Free Running Timer 2 Interrupt (FRT2_TCCS:IVF (compare clear match/counter overflow), FRT2_ETCCS:IRQZF (counter zero detection))
107	FRT3IRQ	Free Running Timer 3 Interrupt (FRT3_TCCS:IVF (compare clear match/counter overflow), FRT3_ETCCS:IRQZF (counter zero detection)
112	FRT16IRQ	Free Running Timer 16 Interrupt (FRT16_TCCS:IVF (compare clear match/counter overflow), FRT16_ETCCS:IRQZF (counter zero detection))
113	FRT17IRQ	Free Running Timer 17 Interrupt (FRT17_TCCS:IVF (compare clear match/counter overflow), FRT17_ETCCS:IRQZF (counter zero detection))
114	FRT18IRQ	Free Running Timer 18 Interrupt (FRT0_TCCS:IVF (compare clear match/counter overflow), FRT18_ETCCS:IRQZF (counter zero detection))
115	FRT19IRQ	Free Running Timer 19 Interrupt (FRT19_TCCS:IVF (compare clear match/counter overflow), FRT19_ETCCS:IRQZF (counter zero detection))
124	ICU2IRQ0	Input Capture Unit 2 channel 0 Interrupt (ICU2_ICEICS01:IDSE0)
125	ICU2IRQ1	Input Capture Unit 2 channel 1 Interrupt (ICU2_ICEICS01:IDSE1)
126	ICU3IRQ0	Input Capture Unit 3 channel 0 Interrupt (ICU3_ICEICS01:IDSE0)
127	ICU3IRQ1	Input Capture Unit 3 channel 1 Interrupt (ICU3_ICEICS01:IDSE1)
132	ICU18IRQ0	Input Capture Unit 18 channel 0 Interrupt (ICU18_ICEICS01:IDSE0)
133	ICU18IRQ1	Input Capture Unit 18 channel 1 Interrupt (ICU18_ICEICS01:IDSE1)
134	ICU19IRQ0	Input Capture Unit 19 channel 0 Interrupt (ICU19_ICEICS01:IDSE0)
135	ICU19IRQ1	Input Capture Unit 19 channel 1 Interrupt (ICU19_ICEICS01:IDSE1)
136	OCU0IRQ0	Output Compare Unit 1 channel 0 Interrupt (OCU0_OSR01:ICP0)
137	OCU0IRQ1	Output Compare Unit 0 channel 1 Interrupt (OCU0_OSR01:ICP1)
138	OCU1IRQ0	Output Compare Unit 1 channel 0 Interrupt (OCU1_OSR01:ICP0)
139	OCU1IRQ1	Output Compare Unit 1 channel 1 Interrupt (OCU1_OSR01:ICP1)
144	OCU16IRQ0	Output Compare Unit 16 channel 0 Interrupt (OCU16_OSR01:ICP0)
145	OCU16IRQ1	Output Compare Unit 16 channel 1 Interrupt (OCU16_OSR01:ICP1)
146	OCU17IRQ0	Output Compare Unit 17 channel 0 Interrupt (OCU17_OSR01:ICP0)
147	OCU17IRQ1	Output Compare Unit 17 channel 1 Interrupt (OCU17_OSR01:ICP1)
152	USART0IRQRX	LIN USART 0 Receive Interrupt (UART0_SSR:RDF (receive data full), USART0_ESR:RXHRI (automatic reception of LIN header completed))
153	USART0IRQTX	LIN USART 0 Transmit Interrupt (UART0_SSR:TDRE (transmission data empty), USART0_ECCR:RBI = 1 and USART0_ECCR:TBI = 1 and USART0_ECCR:BIE = 1 (bus idle interrupt), USART0_ESR:LBSOF (transmitted last bit in synchronous/asynchronous mode), USART0_ESR:TXHRI (automatic transmission of LIN header completed))
154	USART0IRQERR	LIN USART 0 Error Interrupt (USART0_SSR:PE (parity error), USART0_SSR:ORE (overrun error), USART0_SSR:FRE (framing error), USART0_CSCR:CRCERR (error found in checksum validation), USART0_ESR:SYNFE (sync field detection timeout), USART0_ESR:BUSERR (bus error occurred), USART0_ESR:PEFRD (parity error in received frame ID))
158	USART6IRQRX	LIN USART 6 Receive Interrupt (UART6_SSR:RDF (receive data full), USART6_ESR:RXHRI (automatic reception of LIN header completed))

Table 26. Interrupt Table (Continued)

Interrupt Line No	Interrupt Name	Interrupt Description
159	USART6IRQTX	LIN USART 6 Transmit Interrupt (UART0_SSR:TDRE (transmission data empty), USART6_ECCR:RBI = 1 and USART6_ECCR:TBI = 1 and USART6_ECCR:BIE = 1 (bus idle interrupt), USART0_ESR:LBSOF (transmitted last bit in synchronous/asynchronous mode), USART0_ESR:TXHRI (automatic transmission of LIN header completed))
160	USART6IRQERR	LIN USART 6 Error Interrupt (USART0_SSR:PE (parity error), USART6_SSR:ORE (overrun error), USART6_SSR:FRE (framing error), USART6_CSCR:CRCERR (error found in checksum validation), USART0_ESR:SYNFE (sync field detection timeout), USART0_ESR:BUSERR (bus error occurred), USART0_ESR:PEFRD (parity error in received frame ID))
164	DMA0IRQD0	DMA0 Completion Interrupt for channels 0 + 8*n (DMACDIRQ1:DIRQ[24, 16, 8, 0] and DMACDIRQ2:DIRQ[56, 48, 40, 32])
165	DMA0IRQD1	DMA0 Completion Interrupt for channels 1 + 8*n (DMACDIRQ1:DIRQ[25, 17, 9, 1] and DMACDIRQ2:DIRQ[57, 49, 41, 33])
166	DMA0IRQD2	DMA0 Completion Interrupt for channels 2 + 8*n (DMACDIRQ1:DIRQ[26, 18, 10, 2] and DMACDIRQ2:DIRQ[58,50, 42, 34])
167	DMA0IRQD3	DMA0 Completion Interrupt for channels 3 + 8*n (DMACDIRQ1:DIRQ[27, 19, 11, 3] and DMACDIRQ2:DIRQ[59, 51, 43, 35])
168	DMA0IRQD4	DMA0 Completion Interrupt for channels 4 + 8*n (DMACDIRQ1:DIRQ[28, 20, 12, 4] and DMACDIRQ2:DIRQ[60, 52, 44, 36])
169	DMA0IRQD5	DMA0 Completion Interrupt for channels 5 + 8*n (DMACDIRQ1:DIRQ[29, 21, 13, 5] and DMACDIRQ2:DIRQ[61, 53, 45, 37])
170	DMA0IRQD6	DMA0 Completion Interrupt for channels 6 + 8*n (DMACDIRQ1:DIRQ[30, 22, 14, 6] and DMACDIRQ2:DIRQ[62, 54, 46, 38])
171	DMA0IRQD7	DMA0 Completion Interrupt for channels 7 + 8*n (DMACDIRQ1:DIRQ[31, 23, 15, 7] and DMACDIRQ2:DIRQ[63, 55, 47, 39])
172	DMA0IRQERR	DMA0 Error Interrupt (DMACEDIRQ1:EDIRQ[31:0] and DMACEDIRQ2:EDIRQ[63:32])
173	MSCTIRQ	Main Source Clock Timer Interrupt (SYSC_MAINSCTSTATR:INTF is set when counter matches or is greater than the corresponding compare register)
174	SSCTIRQ	Sub Source Clock Timer Interrupt (SYSC_SUBSCTSTATR:INTF is set when counter matches or is greater than the corresponding compare register)
175	RCSCTIRQ	RC Source Clock Timer Interrupt (SYSC_RCSCTSTATR:INTF is set when counter matches or is greater than the corresponding compare register)
176	SRCSCTIRQ	Slow RC Source Clock Timer Interrupt (SYSC_SRCSCTSTATR:INTF is set when counter matches or is greater than the corresponding compare register)
177	CORE0IRQ	CORTEX R4 Performance Monitor Interrupt
178	RLT0IRQ	Reload Timer 0 Interrupt (RLT0_TMCSR:UF is set when reload timer counter underflows)
179	RLT1IRQ	Reload Timer 1 Interrupt (RLT1_TMCSR:UF is set when reload timer counter underflows)
180	RLT2IRQ	Reload Timer 2 Interrupt (RLT2_TMCSR:UF is set when reload timer counter underflows)
181	RLT3IRQ	Reload Timer 3 Interrupt (RLT3_TMCSR:UF is set when reload timer counter underflows)
182	RLT4IRQ	Reload Timer 4 Interrupt (RLT4_TMCSR:UF is set when reload timer counter underflows)
183	RLT5IRQ	Reload Timer 5 Interrupt (RLT5_TMCSR:UF is set when reload timer counter underflows)
184	RLT6IRQ	Reload Timer 6 Interrupt (RLT6_TMCSR:UF is set when reload timer counter underflows)
185	RLT7IRQ	Reload Timer 7 Interrupt (RLT7_TMCSR:UF is set when reload timer counter underflows)
186	RLT8IRQ	Reload Timer 8 Interrupt (RLT8_TMCSR:UF is set when reload timer counter underflows)
187	RLT9IRQ	Reload Timer 9 Interrupt (RLT9_TMCSR:UF is set when reload timer counter underflows)
194	UDC0IRQ0	Up/Down Counter 0 channel 0 Interrupt (UDN0_CS0:OVFF (overflow), UDFF (underflow), CMPF (compare match))
195	UDC0IRQ1	Up/Down Counter 0 channel 1 Interrupt (UDN0_CS1:OVFF (overflow), UDFF (underflow), CMPF (compare match))
198	I2S0IRQ	I2S0 Interrupt (check I2S0_STATUS:[31:24], [19], [17:16] for detailed interrupt cause)
199	I2S1IRQ	I2S1 Interrupt (check I2S1_STATUS:[31:24], [19], [17:16] for detailed interrupt cause)

Table 26. Interrupt Table (Continued)

Interrupt Line No	Interrupt Name	Interrupt Description
202	I2C0IRQ	I2C0 Interrupt (I2C0_IBCSR_INT (masked by I2C0_IBCSR_INTE) set after end of 1 byte data transfer or reception including acknowledge bit (bus master, addressed as slave, GCA received, Arbitration lost), I2C0_IBCSR_BER (masked by I2C0_IBCSR_BEIE) indicates bus error (Start- or Stop-Condition detected at wrong places))
203	I2C0IRQERR	I2C0 Error Interrupt (I2C0_IBCSR_BER (masked by I2C0_IEIER_BEREIE) indicates bus error (Start- or Stop-Condition detected at wrong places), I2C0_IBCSR_AL (masked by I2C0_IEIER_ALEIE) indicates arbitration lost)
206	CRC0IRQ	CRC0 Interrupt (CRC0_CFG:CIRQ set after checksum is calculated and available in register)
208	PPG0IRQ	Programmable Pulse Generator 0 Interrupt (PPG0_PCN:IRQF set depending on PPG0_PCN:IRS[2:0], PPG0_EPCN1:TRIG set when PWM output generation is started, PPG0_EPCN2:[7:0]. See detailed description in FCR4 32-Bit Microcontroller FCR4 Cluster Series Hardware Manual (002-09388)). Programmable Pulse Generator 0 Interrupt
209	PPG1IRQ	Programmable Pulse Generator 1 Interrupt (PPG1_PCN:IRQF set depending on PPG1_PCN:IRS[2:0], PPG1_EPCN1:TRIG set when PWM output generation is started, PPG1_EPCN2:[7:0]. See detailed description in FCR4 32-Bit Microcontroller FCR4 Cluster Series Hardware Manual (002-09388)).
210	PPG2IRQ	Programmable Pulse Generator 2 Interrupt (PPG2_PCN:IRQF set depending on PPG2_PCN:IRS[2:0], PP2_EPCN1:TRIG set when PWM output generation is started, PPG2_EPCN2:[7:0]. See detailed description in FCR4 32-Bit Microcontroller FCR4 Cluster Series Hardware Manual (002-09388)).
211	PPG3IRQ	Programmable Pulse Generator 3 Interrupt (PPG3_PCN:IRQF set depending on PPG3_PCN:IRS[2:0], PPG0_EPCN1:TRIG set when PWM output generation is started, PPG3_EPCN2:[7:0]. See detailed description in FCR4 32-Bit Microcontroller FCR4 Cluster Series Hardware Manual (002-09388)).
212	PPG4IRQ	Programmable Pulse Generator 4 Interrupt (PPG4_PCN:IRQF set depending on PPG4_PCN:IRS[2:0], PPG4_EPCN1:TRIG set when PWM output generation is started, PPG4_EPCN2:[7:0]. See detailed description in FCR4 32-Bit Microcontroller FCR4 Cluster Series Hardware Manual (002-09388)).
213	PPG5IRQ	Programmable Pulse Generator 5 Interrupt (PPG5_PCN:IRQF set depending on PPG5_PCN:IRS[2:0], PPG5_EPCN1:TRIG set when PWM output generation is started, PPG5_EPCN2:[7:0]. See detailed description in FCR4 32-Bit Microcontroller FCR4 Cluster Series Hardware Manual (002-09388)).
214	PPG6IRQ	Programmable Pulse Generator 6 Interrupt (PPG6_PCN:IRQF set depending on PPG6_PCN:IRS[2:0], PPG6_EPCN1:TRIG set when PWM output generation is started, PPG6_EPCN2:[7:0]. See detailed description in FCR4 32-Bit Microcontroller FCR4 Cluster Series Hardware Manual (002-09388)).
215	PPG7IRQ	Programmable Pulse Generator 7 Interrupt (PPG7_PCN:IRQF set depending on PPG7_PCN:IRS[2:0], PPG7_EPCN1:TRIG set when PWM output generation is started, PPG7_EPCN2:[7:0]. See detailed description in FCR4 32-Bit Microcontroller FCR4 Cluster Series Hardware Manual (002-09388)).
216	PPG8IRQ	Programmable Pulse Generator 8 Interrupt (PPG8_PCN:IRQF set depending on PPG8_PCN:IRS[2:0], PPG8_EPCN1:TRIG set when PWM output generation is started, PPG8_EPCN2:[7:0]. See detailed description in FCR4 32-Bit Microcontroller FCR4 Cluster Series Hardware Manual (002-09388)).
217	PPG9IRQ	Programmable Pulse Generator 9 Interrupt (PPG9_PCN:IRQF set depending on PPG9_PCN:IRS[2:0], PPG9_EPCN1:TRIG set when PWM output generation is started, PPG9_EPCN2:[7:0]. See detailed description in FCR4 32-Bit Microcontroller FCR4 Cluster Series Hardware Manual (002-09388)).
218	PPG10IRQ	Programmable Pulse Generator 10 Interrupt (PPG10_PCN:IRQF set depending on PPG10_PCN:IRS[2:0], PPG10_EPCN1:TRIG set when PWM output generation is started, PPG10_EPCN2:[7:0]. See detailed description in FCR4 32-Bit Microcontroller FCR4 Cluster Series Hardware Manual (002-09388)).
219	PPG11IRQ	Programmable Pulse Generator 11 Interrupt (PPG11_PCN:IRQF set depending on PPG11_PCN:IRS[2:0], PPG11_EPCN1:TRIG set when PWM output generation is started, PPG11_EPCN2:[7:0]. See detailed description in FCR4 32-Bit Microcontroller FCR4 Cluster Series Hardware Manual (002-09388)).
220	PPG12IRQ	Programmable Pulse Generator 12 Interrupt (PPG12_PCN:IRQF set depending on PPG12_PCN:IRS[2:0], PPG12_EPCN1:TRIG set when PWM output generation is started, PPG12_EPCN2:[7:0]. See detailed description in FCR4 32-Bit Microcontroller FCR4 Cluster Series Hardware Manual (002-09388)).
221	PPG13IRQ	Programmable Pulse Generator 13 Interrupt (PPG13_PCN:IRQF set depending on PPG13_PCN:IRS[2:0], PPG13_EPCN1:TRIG set when PWM output generation is started, PPG13_EPCN2:[7:0]. See detailed description in FCR4 32-Bit Microcontroller FCR4 Cluster Series Hardware Manual (002-09388)).
222	PPG14IRQ	Programmable Pulse Generator 14 Interrupt (PPG14_PCN:IRQF set depending on PPG14_PCN:IRS[2:0], PPG14_EPCN1:TRIG set when PWM output generation is started, PPG14_EPCN2:[7:0]. See detailed description in FCR4 32-Bit Microcontroller FCR4 Cluster Series Hardware Manual (002-09388)).

Table 26. Interrupt Table (Continued)

Interrupt Line No	Interrupt Name	Interrupt Description
223	PPG15IRQ	Programmable Pulse Generator 15 Interrupt (PPG15_PCN:IRQF set depending on PPG15_PCN:IRS[2:0], PPG15_EPCN1:TRIG set when PWM output generation is started, PPG15_EPCN2:[7:0] see detailed description in document)
232	PPG64IRQ	Programmable Pulse Generator 64 Interrupt (PPG64_PCN:IRQF set depending on PPG64_PCN:IRS[2:0], PPG64_EPCN1:TRIG set when PWM output generation is started, PPG64_EPCN2:[7:0]. See detailed description in FCR4 32-Bit Microcontroller FCR4 Cluster Series Hardware Manual (002-09388)).
233	PPG65IRQ	Programmable Pulse Generator 65 Interrupt (PPG65_PCN:IRQF set depending on PPG65_PCN:IRS[2:0], PPG65_EPCN1:TRIG set when PWM output generation is started, PPG65_EPCN2:[7:0]. See detailed description in FCR4 32-Bit Microcontroller FCR4 Cluster Series Hardware Manual (002-09388)).
234	PPG66IRQ	Programmable Pulse Generator 66 Interrupt (PPG66_PCN:IRQF set depending on PPG66_PCN:IRS[2:0], PPG66_EPCN1:TRIG set when PWM output generation is started, PPG66_EPCN2:[7:0]. See detailed description in FCR4 32-Bit Microcontroller FCR4 Cluster Series Hardware Manual (002-09388)).)
235	PPG67IRQ	Programmable Pulse Generator 67 Interrupt (PPG67_PCN:IRQF set depending on PPG67_PCN:IRS[2:0], PPG67_EPCN1:TRIG set when PWM output generation is started, PPG67_EPCN2:[7:0] see detailed description in document)
236	PPG68IRQ	Programmable Pulse Generator 68 Interrupt (PPG68_PCN:IRQF set depending on PPG68_PCN:IRS[2:0], PPG68_EPCN1:TRIG set when PWM output generation is started, PPG68_EPCN2:[7:0]. See detailed description in FCR4 32-Bit Microcontroller FCR4 Cluster Series Hardware Manual (002-09388)).
237	PPG69IRQ	Programmable Pulse Generator 69 Interrupt (PPG69_PCN:IRQF set depending on PPG69_PCN:IRS[2:0], PPG69_EPCN1:TRIG set when PWM output generation is started, PPG69_EPCN2:[7:0]. See detailed description in FCR4 32-Bit Microcontroller FCR4 Cluster Series Hardware Manual (002-09388)).
238	PPG70IRQ	Programmable Pulse Generator 70 Interrupt (PPG70_PCN:IRQF set depending on PPG70_PCN:IRS[2:0], PPG70_EPCN1:TRIG set when PWM output generation is started, PPG70_EPCN2:[7:0]. See detailed description in FCR4 32-Bit Microcontroller FCR4 Cluster Series Hardware Manual (002-09388)).
239	PPG71IRQ	Programmable Pulse Generator 71 Interrupt (PPG71_PCN:IRQF set depending on PPG71_PCN:IRS[2:0], PPG71_EPCN1:TRIG set when PWM output generation is started, PPG71_EPCN2:[7:0]. See detailed description in FCR4 32-Bit Microcontroller FCR4 Cluster Series Hardware Manual (002-09388)).

NMI

Table 27. List of NMI

NMI Number	Source	Description
0	EIC0NMI	External Pin NMI (EIC0_NMIR:NMIINT)
1	SYSCNMILVD	Low Voltage Detect NMI (check SYSC_SYSERRR:LVD12IF, SYSC_SYSERRR:LVD33IF, SYSC_SYSERRR:LVD50IF for detailed NMI cause)
2	SYSCNMIERR	System Controller Error NMI (check SYSC_SYSERRR:RUNERRIF, SYSC_SYSERRR:RUNWKERRIF, SYSC_SYSERRR:PSSERRIF, SYSC_SYSERRR:TRGERRIF, SYSC_SYSERRR:RUNTRGEIF, SYSC_SYSERRR:MOMISSIF, SYSC_SYSERRR:SOMISSIF, SYSC_SYSERRR:MPMISSIF, SYSC_SYSERRR:SPMISSIF, SYSC_SYSERRR:GPMISSIF, SYSC_SYSERRR:PSSENEIF for detailed NMI cause)
3	WDGNMI	Watchdog NMI (WDG_INT:NMI_FLAG is set on Watchdog error condition if WDG_INT:NMI_EN is '1')
4	TPU0NMI	Timing Protection Unit NMI (check TPU0TIR:IR[7:0] bits for detailed NMI cause) **Note** The Timing Protection Unit NMI is maskable within the TPU but non-maskable on system level.
5	MPUXDMA0NMI	MPU DMA0 Access Violation NMI (MPUXDMA0_CTRL0:NMI is set when a memory protection violation by DMA0 is detected)
9	IRQ0NMIERR	IRQ Double Error NMI (IRQ0_EEI:EENS bit is set when a double bit error is detected in the IRQ0 Interrupt Vector RAM)
11	BECU0NMI	BECU0 Access Violation NMI (BECU0_CTRL:NMI bit is set when a bus error is detected on the Peripheral Group 0 bus)
12	BECU1NMI	BECU1 Access Violation NMI (BECU1_CTRL:NMI bit is set when a bus error is detected on the Peripheral Group 1 bus)
13	BECU3NMI	BECU3 Access Violation NMI (BECU3_CTRL:NMI bit is set when a bus error is detected on the Peripheral Group 3 bus)

DMA Overview

Table 28. Modules with DMA

DMA Client (Interface)	DMA Client (Interface) Name	DMA Client (Interface) Description
0	EXTDMA0	External DMA Request 0 (external pin DMA0_DREQ0)
1	EXTDMA1	External DMA Request 1 (external pin DMA0_DREQ0)
8	EIC0DMA0	External Interrupt 0 DMA Request (EIC0_DRFR:DRF0)
9	EIC0DMA1	External Interrupt 1 DMA Request (EIC0_DRFR:DRF1)
10	EIC0DMA2	External Interrupt 2 DMA Request (EIC0_DRFR:DRF2)
11	EIC0DMA3	External Interrupt 3 DMA Request (EIC0_DRFR:DRF3)
12	EIC0DMA4	External Interrupt 4 DMA Request (EIC0_DRFR:DRF4)
13	EIC0DMA5	External Interrupt 5 DMA Request (EIC0_DRFR:DRF5)
14	EIC0DMA6	External Interrupt 6 DMA Request (EIC0_DRFR:DRF6)
15	EIC0DMA7	External Interrupt 7 DMA Request (EIC0_DRFR:DRF7)
16	EIC0DMA8	External Interrupt 8 DMA Request (EIC0_DRFR:DRF8)
17	EIC0DMA9	External Interrupt 9 DMA Request (EIC0_DRFR:DRF9)
18	EIC0DMA10	External Interrupt 10 DMA Request (EIC0_DRFR:DRF10)
19	EIC0DMA11	External Interrupt 11 DMA Request (EIC0_DRFR:DRF11)
20	EIC0DMA12	External Interrupt 12 DMA Request (EIC0_DRFR:DRF12)
21	EIC0DMA13	External Interrupt 13 DMA Request (EIC0_DRFR:DRF13)
22	EIC0DMA14	External Interrupt 14 DMA Request (EIC0_DRFR:DRF14)
23	EIC0DMA15	External Interrupt 15 DMA Request (EIC0_DRFR:DRF15)
24	EIC0DMA16	External Interrupt 16 DMA Request(EIC0_DRFR:DRF16)
25	EIC0DMA17	External Interrupt 17 DMA Request (EIC0_DRFR:DRF17)
26	EIC0DMA18	External Interrupt 18 DMA Request (EIC0_DRFR:DRF18)
27	EIC0DMA19	External Interrupt 19 DMA Request (EIC0_DRFR:DRF19)
28	EIC0DMA20	External Interrupt 20 DMA Request (EIC0_DRFR:DRF20)
29	EIC0DMA21	External Interrupt 21 DMA Request (EIC0_DRFR:DRF21)
30	EIC0DMA22	External Interrupt 22 DMA Request (EIC0_DRFR:DRF22)
31	EIC0DMA23	External Interrupt 23 DMA Request (EIC0_DRFR:DRF23)
32	EIC0DMA24	External Interrupt 24 DMA Request (EIC0_DRFR:DRF24)
33	EIC0DMA25	External Interrupt 25 DMA Request (EIC0_DRFR:DRF25)
34	EIC0DMA26	External Interrupt 26 DMA Request (EIC0_DRFR:DRF26)
35	EIC0DMA27	External Interrupt 27 DMA Request (EIC0_DRFR:DRF27)
36	EIC0DMA28	External Interrupt 28 DMA Request (EIC0_DRFR:DRF28)
37	EIC0DMA29	External Interrupt 29 DMA Request (EIC0_DRFR:DRF29)
38	EIC0DMA30	External Interrupt 30 DMA Request (EIC0_DRFR:DRF30)
39	EIC0DMA31	External Interrupt 31 DMA Request (EIC0_DRFR:DRF31)
40	SG0DMA	Sound Generator 0 DMA Request (SG0_CR1:AMINT* (amplitude match flag) SG0_CR1:TCINT* (tone pulse count match flag) SG0_CR1:ZAINT* (zero amplitude flag))
44	HSSPI0DMARX	HSSPI0 Receive DMA Request (HSSPI0_RXF:RFMTS* (RX FIFO fill level more than threshold))

Table 28. Modules with DMA (Continued)

DMA Client (Interface)	DMA Client (Interface) Name	DMA Client (Interface) Description
45	HSSPI0DMAT	HSSPI0 Transmit DMA Request (HSSPI0_TXF:TFLETS* (TX FIFO fill level less or equal to threshold))
48	FRT0DMA	Free Running Timer 0 DMA Request (FRT0_TCCS:IVF* (compare clear flag); FRT0_ETCCS:IRQZF* (zero detect flag))
49	FRT1DMA	Free Running Timer 1 DMA Request (FRT1_TCCS:IVF* (compare clear flag); FRT1_ETCCS:IRQZF* (zero detect flag))
50	FRT2DMA	Free Running Timer 2 DMA Request (FRT2_TCCS:IVF* (compare clear flag); FRT2_ETCCS:IRQZF* (zero detect flag))
51	FRT3DMA	Free Running Timer 3 DMA Request (FRT3_TCCS:IVF* (compare clear flag); FRT3_ETCCS:IRQZF* (zero detect flag))
64	FRT16DMA	Free Running Timer 16 DMA Request (FRT16_TCCS:IVF* (compare clear flag); FRT16_ETCCS:IRQZF* (zero detect flag))
65	FRT17DMA	Free Running Timer 17 DMA Request (FRT17_TCCS:IVF* (compare clear flag); FRT17_ETCCS:IRQZF* (zero detect flag))
66	FRT18DMA	Free Running Timer 18 DMA Request (FRT18_TCCS:IVF* (compare clear flag); FRT18_ETCCS:IRQZF* (zero detect flag))
67	FRT19DMA	Free Running Timer 19 DMA Request (FRT19_TCCS:IVF* (compare clear flag); FRT19_ETCCS:IRQZF* (zero detect flag))
84	ICU2DMA0	Input Capture Unit 2 channel 0 DMA Request (ICU2_ICEICS01:ICP0*)
85	ICU2DMA1	Input Capture Unit 2 channel 1 DMA Request (ICU2_ICEICS01:ICP1*)
86	ICU3DMA0	Input Capture Unit 3 channel 0 DMA Request (ICU2_ICEICS01:ICP0*)
87	ICU3DMA1	Input Capture Unit 3 channel 1 DMA Request (ICU2_ICEICS01:ICP1*)
116	ICU18DMA0	Input Capture Unit 18 channel 0 DMA Request (ICU18_ICEICS01:ICP0*)
117	ICU18DMA1	Input Capture Unit 18 channel 1 DMA Request (ICU18_ICEICS01:ICP1*)
118	ICU19DMA0	Input Capture Unit 19 channel 0 DMA Request (ICU19_ICEICS01:ICP0*)
119	ICU19DMA1	Input Capture Unit 19 channel 1 DMA Request (ICU19_ICEICS01:ICP1*)
144	OCU0DMA0	Output Compare Unit 0 channel 0 DMA Request (OCU0_OSR01:ICP0*)
145	OCU0DMA1	Output Compare Unit 0 channel 1 DMA Request (OCU0_OSR01:ICP1*)
146	OCU1DMA0	Output Compare Unit 1 channel 0 DMA Request (OCU1_OSR01:ICP0*)
147	OCU1DMA1	Output Compare Unit 1 channel 1 DMA Request (OCU1_OSR01:ICP1*)
176	OCU16DMA0	Output Compare Unit 16 channel 0 DMA Request (OCU16_OSR01:ICP0*)
177	OCU16DMA1	Output Compare Unit 16 channel 1 DMA Request (OCU16_OSR01:ICP1*)
178	OCU17DMA0	Output Compare Unit 17 channel 0 DMA Request (OCU17_OSR01:ICP0*)
179	OCU17DMA1	Output Compare Unit 17 channel 1 DMA Request (OCU17_OSR01:ICP1*)
208	USART0DMARX	LIN USART 0 Receive DMA Request (USART0_SSR:RDRF* (RX data full flag))
209	USART0DMATX	LIN USART 0 Transmit DMA Request (USART0_SSR:TDRE* (TX data empty flag))
220	USART6DMARX	LIN USART 6 Receive DMA Request (USART6_SSR:RDRF* (RX data full flag))
221	USART6DMATX	LIN USART 6 Transmit DMA Request (USART6_SSR:TDRE* (TX data empty flag))
232	I2C0DMARX	I2C0 Receive DMA Request (I2C0_IBCSR:INT*)
233	I2C0DMATX	I2C0 Transmit DMA Request (I2C0_IBCSR:INT*)
244	PPG0DMA	Programmable Pulse Generator 0 DMA Request (PPG0_PCN:IRQF*)

Table 28. Modules with DMA (Continued)

DMA Client (Interface)	DMA Client (Interface) Name	DMA Client (Interface) Description
245	PPG1DMA	Programmable Pulse Generator 1 DMA Request (PPG1_PCN:IRQF*)
246	PPG2DMA	Programmable Pulse Generator 2 DMA Request (PPG2_PCN:IRQF*)
247	PPG3DMA	Programmable Pulse Generator 3 DMA Request (PPG3_PCN:IRQF*)
248	PPG4DMA	Programmable Pulse Generator 4 DMA Request (PPG4_PCN:IRQF*)
249	PPG5DMA	Programmable Pulse Generator 5 DMA Request (PPG5_PCN:IRQF*)
250	PPG6DMA	Programmable Pulse Generator 6 DMA Request (PPG6_PCN:IRQF*)
251	PPG7DMA	Programmable Pulse Generator 7 DMA Request (PPG7_PCN:IRQF*)
252	PPG8DMA	Programmable Pulse Generator 8 DMA Request (PPG8_PCN:IRQF*)
253	PPG9DMA	Programmable Pulse Generator 9 DMA Request (PPG9_PCN:IRQF*)
254	PPG10DMA	Programmable Pulse Generator 10 DMA Request (PPG10_PCN:IRQF*)
255	PPG11DMA	Programmable Pulse Generator 11 DMA Request (PPG11_PCN:IRQF*)
256	PPG12DMA	Programmable Pulse Generator 12 DMA Request (PPG12_PCN:IRQF*)
257	PPG13DMA	Programmable Pulse Generator 13 DMA Request (PPG13_PCN:IRQF*)
258	PPG14DMA	Programmable Pulse Generator 14 DMA Request (PPG14_PCN:IRQF*)
259	PPG15DMA	Programmable Pulse Generator 15 DMA Request (PPG15_PCN:IRQF*)
308	PPG64DMA	Programmable Pulse Generator 64 DMA Request (PPG64_PCN:IRQF*)
309	PPG65DMA	Programmable Pulse Generator 65 DMA Request (PPG65_PCN:IRQF*)
310	PPG66DMA	Programmable Pulse Generator 66 DMA Request (PPG66_PCN:IRQF*)
311	PPG67DMA	Programmable Pulse Generator 67 DMA Request (PPG67_PCN:IRQF*)
312	PPG68DMA	Programmable Pulse Generator68 DMA Request (PPG68_PCN:IRQF*)
313	PPG69DMA	Programmable Pulse Generator 69 DMA Request (PPG69_PCN:IRQF*)
314	PPG70DMA	Programmable Pulse Generator 70 DMA Request (PPG70_PCN:IRQF*)
315	PPG71DMA	Programmable Pulse Generator 71 DMA Request (PPG71_PCN:IRQF*)
372	ADC0DMA	ADC0 Conversion End DMA Request (ADC0_CS1:INT* (end of conversion flag))
373	ADC0DMA2	ADC0 Scan End DMA Request (ADC0_CS3:INT2* (end of scan flag))
376	RLT0DMA	Reload Timer 0 DMA Request (RTL0_TMCSR:UF* (underflow flag))
377	RLT1DMA	Reload Timer 1 DMA Request (RTL1_TMCSR:UF* (underflow flag))
378	RLT2DMA	Reload Timer 2 DMA Request (RTL2_TMCSR:UF* (underflow flag))
379	RLT3DMA	Reload Timer 3 DMA Request (RTL3_TMCSR:UF* (underflow flag))
380	RLT4DMA	Reload Timer 4 DMA Request (RTL4_TMCSR:UF* (underflow flag))
381	RLT5DMA	Reload Timer 5 DMA Request (RTL5_TMCSR:UF* (underflow flag))
382	RLT6DMA	Reload Timer 6 DMA Request (RTL6_TMCSR:UF* (underflow flag))
383	RLT7DMA	Reload Timer 7 DMA Request (RTL7_TMCSR:UF* (underflow flag))
384	RLT8DMA	Reload Timer 8 DMA Request (RTL8_TMCSR:UF* (underflow flag))
385	RLT9DMA	Reload Timer 9 DMA Request (RTL9_TMCSR:UF* (underflow flag))
408	I2S0DMARX	I2S0 Receive DMA Request (I2S0_STATUS:RXFI* (receive FIFO full))
409	I2S0DMATX	I2S0 Transmit DMA Request (I2S0_STATUS:TXFI* (transmit FIFO empty))
410	I2S1DMARX	I2S0 Receive DMA Request (I2S1_STATUS:RXFI* (receive FIFO full))
411	I2S1DMATX	I2S0 Transmit DMA Request (I2S1_STATUS:TXFI* (transmit FIFO empty))

Table 28. Modules with DMA (Continued)

DMA Client (Interface)	DMA Client (Interface) Name	DMA Client (Interface) Description
424	CRC0DMA	CRC0 DMA Request (CRC0_CFG:CIRQ* (CRC calculated flag))
426	SPI0DMARX	SPI0 Receive DMA Request (SPI0_RXF:RFMTS* (RX FIFO fill level more than threshold))
427	SPI0DMATX	SPI0 Transmit DMA Request (SPI0_TXF:TFLETS* (TX FIFO fill level less or equal to threshold))
428	SPI1DMARX	SPI1 Receive DMA Request (SPI1_RXF:RFMTS* (RX FIFO fill level more than threshold))
429	SPI1DMATX	SPI1 Transmit DMA Request (SPI1_TXF:TFLETS* (TX FIFO fill level less or equal to threshold))
430	SPI2DMARX	SPI2 Receive DMA Request (SPI2_RXF:RFMTS* (RX FIFO fill level more than threshold))
431	SPI2DMATX	SPI2 Transmit DMA Request (SPI2_TXF:TFLETS* (TX FIFO fill level less or equal to threshold))
450	EEFLASHDMA	EE Flash DMA Request (EEFCFG_WSR:ST[1:0])
451	ARH0DMA0	Remote Handler DMA Request 0 (ARH0_TBCTRL0:TBIRQ*)
452	ARH0DMA1	Remote Handler DMA Request 1 (ARH0_TBCTRL1:TBIRQ*)
453	ARH0DMA2	Remote Handler DMA Request 2 (ARH0_TBCTRL2:TBIRQ*)
454	ARH0DMA3	Remote Handler DMA Request 3 (ARH0_TBCTRL3:TBIRQ*)
455	ARH0DMA4	Remote Handler DMA Request 4 (ARH0_TBCTRL4:TBIRQ*)
456	ARH0DMA5	Remote Handler DMA Request 5 (ARH0_TBCTRL5:TBIRQ*)
457	ARH0DMA6	Remote Handler DMA Request 6 (ARH0_TBCTRL6:TBIRQ*)
458	ARH0DMA7	Remote Handler DMA Request 7 (ARH0_TBCTRL7:TBIRQ*)
459	ARH0DMA8	Remote Handler DMA Request 8 (ARH0_TBCTRL8:TBIRQ*)
460	ARH0DMA9	Remote Handler DMA Request 9 (ARH0_TBCTRL9:TBIRQ*)
461	ARH0DMA10	Remote Handler DMA Request 10 (ARH0_TBCTRL10:TBIRQ*)
462	ARH0DMA11	Remote Handler DMA Request 11 (ARH0_TBCTRL11:TBIRQ*)
463	ARH0DMA12	Remote Handler DMA Request 12 (ARH0_TBCTRL12:TBIRQ*)
464	ARH0DMA13	Remote Handler DMA Request 13 (ARH0_TBCTRL13:TBIRQ*)
465	ARH0DMA14	Remote Handler DMA Request 14 (ARH0_TBCTRL14:TBIRQ*)
466	ARH0DMA15	Remote Handler DMA Request 15 (ARH0_TBCTRL15:TBIRQ*)
467	PPUDMA	PPU DMA Request (DMA is triggered by successful PPU UNLOCK (PPU0_UNLOCK) indicated by PPU0_ST:LST = 0)

PPU

Table 29. List of PPU Channels

	31	30	29	28	27	26	25	24	23	22	21	20	19	18	17	16	15	14	13	12	11	10	9	8	7	6	5	4	3	2	1	0
PPU0_PA0 PPU0_PR0	-	-	-	-	-	-	-	-	-	-	-	-	-	-	-	-	-	-	-	-	-	-	-	-	-	-	-	-	-	-	-	-
PPU0_PA1 PPU0_PR1	-	-	-	-	-	-	-	-	-	-	-	-	-	-	-	-	-	-	-	-	-	-	-	-	-	-	-	-	-	-	-	-
PPU0_PA2 PPU0_PR2	-	-	-	-	-	-	-	-	-	-	-	-	-	-	-	SG0	-	-	-	-	-	-	-	-	-	SMCTG0	SMC5	SMC4	SMC3	SMC2	SMC1	SMC0
PPU0_PA3 PPU0_PR3	-	-	-	-	-	-	-	UDC0	-	-	-	-	-	-	I2S1	I2S0	-	-	-	-	-	-	-	I2C0	-	-	-	ARH0	-	-	-	ADC0
PPU0_PA4 PPU0_PR4	EBI	-	-	-	-	-	-	-	-	-	-	-	-	-	-	HSSPI0	-	-	-	-	-	-	-	-	-	-	-	-	-	SPI2	SPI1	SPI0
PPU0_PA5 PPU0_PR5	-	-	-	-	-	-	-	-	-	-	-	-	-	CAN2	CAN1	CAN0	-	-	-	-	-	-	-	-	-	USART6	-	-	-	-	-	USART0
PPU0_PA6 PPU0_PR6	-	-	-	-	-	-	-	-	-	-	-	-	-	-	-	-	-	-	-	-	-	-	RLT9	RLT8	RLT7	RLT6	RLT5	RLT4	RLT3	RLT2	RLT1	RLT0
PPU0_PA7 PPU0_PR7	-	-	-	-	-	-	-	-	-	-	-	-	FRT19	FRT18	FRT17	FRT16	-	-	-	-	-	-	-	-	-	-	-	-	FRT3	FRT2	FRT1	FRT0
PPU0_PA8 PPU0_PR8	-	-	-	-	-	-	-	-	-	-	-	-	ICU19	ICU18	-	-	-	-	-	-	-	-	-	-	-	-	-	-	ICU3	ICU2	-	-
PPU0_PA9 PPU0_PR9	-	-	-	-	-	-	-	-	-	-	-	-	-	-	OCU17	OCU16	-	-	-	-	-	-	-	-	-	-	-	-	-	-	OCU1	OCU0
PPU0_PA10 PPU0_PR10	PPGGLC1	PPGGLC0	EEFCFG	RTC	-	EICU0	-	CRC0	-	-	-	-	-	-	-	-	-	-	-	-	-	-	-	-	SRCSCT	RCSCT	SSCT	MSCT	WDG	DBG0	PPCPRIV	PPCUSER
PPU0_PA11 PPU0_PR11	-	-	-	-	-	-	-	-	-	-	-	-	-	-	PPGGRP17	PPGGRP16	-	-	-	-	-	-	-	-	-	-	-	-	PPGGRP3	PPGGRP2	PPGGRP1	PPGGRP0
PPU0_PA12 PPU0_PR12	-	-	-	-	-	-	-	-	-	-	-	-	-	-	-	-	PPG15	PPG14	PPG13	PPG12	PPG11	PPG10	PPG9	PPG8	PPG7	PPG6	PPG5	PPG4	PPG3	PPG2	PPG1	PPG0
PPU0_PA13 PPU0_PR13	-	-	-	-	-	-	-	-	-	-	-	-	-	-	-	-	-	-	-	-	-	-	-	-	PPG71	PPG70	PPG69	PPG68	PPG67	PPG66	PPG65	PPG64
PPU0_PA14 PPU0_PR14	-	-	-	-	-	-	-	-	-	-	-	-	-	-	-	-	-	-	-	-	-	-	-	-	-	-	-	-	-	-	-	-
PPU0_PA15 PPU0_PR15	-	-	-	-	-	-	-	-	-	-	-	-	-	-	-	-	-	-	-	-	-	-	-	-	-	-	-	-	-	-	-	-

Notes

4. In general, a PPU channel controls the access in user mode to the corresponding peripheral.
5. However, there are a few exceptions:
   - PPCPRIV controls the access to PPC in privileged mode.
   - PPCUSER controls the access to PPC in user mode.
   - MSCT, SSCT, RCSCT and SRCSCT control the access to the source clock timers within the System Controller, i.e. the registers SYSC_MSCT*, SYSC_SSCT*, SYSC_RCSCT* and SYSC_SRCSCT, after the corresponding source clock stabilization time has elapsed.
   - WDG controls the write access in user mode to the Watchdog trigger registers, so WDG has no read attribute.
   - Read attribute for DBG0 is always enabled. Even privilege mode access for DBG0 needs PPU to be enabled.

Master ID

Table 30. List of Master IDs used on CY9DF126 Device

Master Name	Master ID (USER Signal Values)
CPU_S0	0x04
DMA_SI	0x08
DAP_AHB	0x01

I/O Map

Table 34. Memory Layout of HSSPI0 Registers

Offset	+3	+2	+1	+0
0xB0000000	HSSPI0_MCTRL 00000000 00000000 00000000 00000000			
0xB0000004	HSSPI0_PCC0 00000000 00000001 00000000 00000000			
0xB0000008	HSSPI0_PCC1 00000000 00000001 00000000 00000000			
0xB000000C	HSSPI0_PCC2 00000000 00000001 00000000 00000000			
0xB0000010	HSSPI0_PCC3 00000000 00000001 00000000 00000000			
0xB0000014	HSSPI0_TXF 00000000 00000000 00000000 00000000			
0xB0000018	HSSPI0_TXE 00000000 00000000 00000000 00000000			
0xB000001C	HSSPI0_TXC 00000000 00000000 00000000 00000000			
0xB0000020	HSSPI0_RXF 00000000 00000000 00000000 00000000			
0xB0000024	HSSPI0_RXE 00000000 00000000 00000000 00000000			
0xB0000028	HSSPI0_RXC 00000000 00000000 00000000 00000000			
0xB000002C	HSSPI0_FAULTF 00000000 00000000 00000000 00000000			
0xB0000030	HSSPI0_FAULTC 00000000 00000000 00000000 00000000			
0xB0000034	read0 00000000 00000000		HSSPI0_DMDMAEN 00000000	HSSPI0_DMCFG 00000001
0xB0000038	HSSPI0_DMTRP 00000000	HSSPI0_DMPSEL 00000000	HSSPI0_DMSTOP 00000000	HSSPI0_DMSTART 00000000
0xB000003C	HSSPI0_DMBCS 00000000 00000000		HSSPI0_DMBCC 00000000 00000000	
0xB0000040	HSSPI0_DMSTATUS 00000000 00000000 00000000 00000000			
0xB0000044	read0 00000000 00000000		HSSPI0_RXBITCNT 00000000	HSSPI0_TXBITCNT 00000000
0xB0000048	HSSPI0_RXSHIFT 00000000 00000000 00000000 00000000			
0xB000004C	HSSPI0_FIFOCFG 00000000 00000000 00000000 01110111			
0xB0000050	HSSPI0_TXFIFO0 00000000 00000000 00000000 00000000			
0xB0000054	HSSPI0_TXFIFO1 00000000 00000000 00000000 00000000			
0xB0000058	HSSPI0_TXFIFO2 00000000 00000000 00000000 00000000			

Table 34. Memory Layout of HSSPI0 Registers (Continued)

Offset	+3	+2	+1	+0
0xB000005C	HSSPI0_TXFIFO3 00000000 00000000 00000000 00000000			
0xB0000060	HSSPI0_TXFIFO4 00000000 00000000 00000000 00000000			
0xB0000064	HSSPI0_TXFIFO5 00000000 00000000 00000000 00000000			
0xB0000068	HSSPI0_TXFIFO6 00000000 00000000 00000000 00000000			
0xB000006C	HSSPI0_TXFIFO7 00000000 00000000 00000000 00000000			
0xB0000070	HSSPI0_TXFIFO8 00000000 00000000 00000000 00000000			
0xB0000074	HSSPI0_TXFIFO9 00000000 00000000 00000000 00000000			
0xB0000078	HSSPI0_TXFIFO10 00000000 00000000 00000000 00000000			
0xB000007C	HSSPI0_TXFIFO11 00000000 00000000 00000000 00000000			
0xB0000080	HSSPI0_TXFIFO12 00000000 00000000 00000000 00000000			
0xB0000084	HSSPI0_TXFIFO13 00000000 00000000 00000000 00000000			
0xB0000088	HSSPI0_TXFIFO14 00000000 00000000 00000000 00000000			
0xB000008C	HSSPI0_TXFIFO15 00000000 00000000 00000000 00000000			
0xB0000090	HSSPI0_RXFIFO0 00000000 00000000 00000000 00000000			
0xB0000094	HSSPI0_RXFIFO1 00000000 00000000 00000000 00000000			
0xB0000098	HSSPI0_RXFIFO2 00000000 00000000 00000000 00000000			
0xB000009C	HSSPI0_RXFIFO3 00000000 00000000 00000000 00000000			
0xB00000A0	HSSPI0_RXFIFO4 00000000 00000000 00000000 00000000			
0xB00000A4	HSSPI0_RXFIFO5 00000000 00000000 00000000 00000000			
0xB00000A8	HSSPI0_RXFIFO6 00000000 00000000 00000000 00000000			
0xB00000AC	HSSPI0_RXFIFO7 00000000 00000000 00000000 00000000			
0xB00000B0	HSSPI0_RXFIFO8 00000000 00000000 00000000 00000000			
0xB00000B4	HSSPI0_RXFIFO9 00000000 00000000 00000000 00000000			
0xB00000B8	HSSPI0_RXFIFO10 00000000 00000000 00000000 00000000			
0xB00000BC	HSSPI0_RXFIFO11 00000000 00000000 00000000 00000000			

Table 34. Memory Layout of HSSPI0 Registers (Continued)

Offset	+3	+2	+1	+0
0xB00000C0	HSSPI0_RXFIFO12 00000000 00000000 00000000 00000000			
0xB00000C4	HSSPI0_RXFIFO13 00000000 00000000 00000000 00000000			
0xB00000C8	HSSPI0_RXFIFO14 00000000 00000000 00000000 00000000			
0xB00000CC	HSSPI0_RXFIFO15 00000000 00000000 00000000 00000000			
0xB00000D0	HSSPI0_CSCFG 00000000 00000000 00000000 00000000			
0xB00000D4	HSSPI0_CSITIME 00000000 00000000 11111111 11111111			
0xB00000D8	HSSPI0_CSAEXT 00000000 00000000 00000000 00000000			
0xB00000DC	HSSPI0_RDCSDC1 00000000 00000000		HSSPI0_RDCSDC0 00000000 00000000	
0xB00000E0	HSSPI0_RDCSDC3 00000000 00000000		HSSPI0_RDCSDC2 00000000 00000000	
0xB00000E4	HSSPI0_RDCSDC5 00000000 00000000		HSSPI0_RDCSDC4 00000000 00000000	
0xB00000E8	HSSPI0_RDCSDC7 00000000 00000000		HSSPI0_RDCSDC6 00000000 00000000	
0xB00000EC	HSSPI0_WRCSDC1 00000000 00000000		HSSPI0_WRCSDC0 00000000 00000000	
0xB00000F0	HSSPI0_WRCSDC3 00000000 00000000		HSSPI0_WRCSDC2 00000000 00000000	
0xB00000F4	HSSPI0_WRCSDC5 00000000 00000000		HSSPI0_WRCSDC4 00000000 00000000	
0xB00000F8	HSSPI0_WRCSDC7 00000000 00000000		HSSPI0_WRCSDC6 00000000 00000000	
0xB00000FC	HSSPI0_MID 00000000 00000000 00000000 00000001			
0xB0000100- B0077FFC	reserved 00000000 00000000 00000000 0000000X			
0xB0078000	read0 00000000 00000000		RICFG8_HSSPI0MSTART 00000000 00000000	
0xB0078004- B007FC00	reserved 00000000 00000000 00000000 0000000X			
0xB007FC04	BSU8_BTST 00000000 00000000 00000000 00000000			
0xB007FC08- B007FC0C	reserved XXXXXXXX XXXXXXXX XXXXXXXX XXXXXXXX			
0xB007FC10	BSU8_PEN0 00000000 00000000 00000000 00000000			
0xB007FC14- B007FFFC	reserved XXXXXXXX XXXXXXXX XXXXXXXX XXXXXXXX			

Table 35. Memory Layout of EBI Registers

Offset	+3	+2	+1	+0
0xB0180000	EBI_UNLOCK 00000000 00000000 00000000 00000000			
0xB0180004	EBI_LSTSR 00000000 00000000 00000000 00000000			
0xB0180008	EBI_SFMR0 00000000 00000000 00000000 00000000			
0xB018000C	EBI_SFMR1 00000000 00000000 00000000 00000000			
0xB0180010	EBI_SFMR2 00000000 00000000 00000000 00000000			
0xB0180014	EBI_SFMR3 00000000 00000000 00000000 00000000			
0xB0180018	EBI_SFMR4 00000000 00000000 00000000 00000000			
0xB018001C	EBI_SFMR5 00000000 00000000 00000000 00000000			
0xB0180020	EBI_SFMR6 00000000 00000000 00000000 00000000			
0xB0180024	EBI_SFMR7 00000000 00000000 00000000 00000000			
0xB0180028	EBI_SFACCR0 00000101 01011111 11110000 00001111			
0xB018002C	EBI_SFACCR1 00000101 01011111 11110000 00001111			
0xB0180030	EBI_SFACCR2 00000101 01011111 11110000 00001111			
0xB0180034	EBI_SFACCR3 00000101 01011111 11110000 00001111			
0xB0180038	EBI_SFACCR4 00000101 01011111 11110000 00001111			
0xB018003C	EBI_SFACCR5 00000101 01011111 11110000 00001111			
0xB0180040	EBI_SFACCR6 00000101 01011111 11110000 00001111			
0xB0180044	EBI_SFACCR7 00000101 01011111 11110000 00001111			
0xB0180048	EBI_SFADDCR0 00000000 00001111 00000000 00000000			
0xB018004C	EBI_SFADDCR1 00000000 00001111 00000000 00010000			
0xB0180050	EBI_SFADDCR2 00000000 00001111 00000000 00100000			
0xB0180054	EBI_SFADDCR3 00000000 00001111 00000000 00110000			
0xB0180058	EBI_SFADDCR4 00000000 00001111 00000000 01000000			
0xB018005C	EBI_SFADDCR5 00000000 00001111 00000000 01010000			

Table 35. Memory Layout of EBI Registers (Continued)

Offset	+3	+2	+1	+0
0xB0180060	EBI_SFADDCR6 00000000 00001111 00000000 01100000			
0xB0180064	EBI_SFADDCR7 00000000 00001111 00000000 01110000			
0xB0180068	EBI_SDMODCR 00000000 00000000 00010011 00000000			
0xB018006C	EBI_SDRCR 00000000 00000000 00000000 00101000			
0xB0180070	EBI_SDPCR 00000000 00000000 00000000 00000000			
0xB0180074	EBI_SDTCR 00000000 01000010 00010001 01000001			
0xB0180078	EBI_SDCOMDR 00000000 00000000 00000000 00000000			
0xB018007C	EBI_ERRR 00000000 00000000 00000000 00000000			
0xB0180080 - 0xB01FFC00	reserved XXXXXXXX XXXXXXXX XXXXXXXX XXXXXXXX			
0xB01FFC04	BSU10_BTST 00000000 00000000 00000000 00000000			
0xB01FFC08 - 0xB01FFC0C	reserved XXXXXXXX XXXXXXXX XXXXXXXX XXXXXXXX			
0xB01FFC10	BSU10_PEN0 00000000 00000000 00000000 00000000			
0xB01FFC14 - 0xB01FFFFC	reserved XXXXXXXX XXXXXXXX XXXXXXXX XXXXXXXX			

Table 36. Memory Layout of MEMORY_CONFIG Registers

Offset	+7	+6	+5	+4	+3	+2	+1	+0
0xB0400000	IRQ0_NMIST 00000000 00000000 00001111 00100000				IRQ0_NMIVAS 00000000 00000000 00000000 00000000			
0xB0400008	IRQ0_IRQST 00000000 00011111 00000010 00000000				IRQ0_IRQVAS 00000000 00000000 00000000 00000000			
0xB0400010	IRQ0_NMIVA1 XXXXXXXX XXXXXXXX XXXXXXXX XXXXXX00				IRQ0_NMIVA0 XXXXXXXX XXXXXXXX XXXXXXXX XXXXXX00			
0xB0400018	IRQ0_NMIVA3 XXXXXXXX XXXXXXXX XXXXXXXX XXXXXX00				IRQ0_NMIVA2 XXXXXXXX XXXXXXXX XXXXXXXX XXXXXX00			
0xB0400020	IRQ0_NMIVA5 XXXXXXXX XXXXXXXX XXXXXXXX XXXXXX00				IRQ0_NMIVA4 XXXXXXXX XXXXXXXX XXXXXXXX XXXXXX00			
0xB0400028	reserved XXXXXXXX XXXXXXXX XXXXXXXX XXXXXXXX				reserved XXXXXXXX XXXXXXXX XXXXXXXX XXXXXXXX			
0xB0400030	IRQ0_NMIVA9 XXXXXXXX XXXXXXXX XXXXXXXX XXXXXX00				reserved XXXXXXXX XXXXXXXX XXXXXXXX XXXXXXXX			
0xB0400038	IRQ0_NMIVA11 XXXXXXXX XXXXXXXX XXXXXXXX XXXXXX00				reserved XXXXXXXX XXXXXXXX XXXXXXXX XXXXXXXX			
0xB0400040	IRQ0_NMIVA13 XXXXXXXX XXXXXXXX XXXXXXXX XXXXXX00				IRQ0_NMIVA12 XXXXXXXX XXXXXXXX XXXXXXXX XXXXXX00			
0xB0400048 - 0xB0400088	reserved XXXXXXXX XXXXXXXX XXXXXXXX XXXXXXXX				reserved XXXXXXXX XXXXXXXX XXXXXXXX XXXXXXXX			
0xB0400090	IRQ0_IRQVA1 XXXXXXXX XXXXXXXX XXXXXXXX XXXXXX00				IRQ0_IRQVA0 XXXXXXXX XXXXXXXX XXXXXXXX XXXXXX00			
0xB0400098	reserved XXXXXXXX XXXXXXXX XXXXXXXX XXXXXXXX				reserved XXXXXXXX XXXXXXXX XXXXXXXX XXXXXXXX			
0xB04000A0	reserved XXXXXXXX XXXXXXXX XXXXXXXX XXXXXXXX				reserved XXXXXXXX XXXXXXXX XXXXXXXX XXXXXXXX			
0xB04000A8	reserved XXXXXXXX XXXXXXXX XXXXXXXX XXXXXXXX				reserved XXXXXXXX XXXXXXXX XXXXXXXX XXXXXXXX			
0xB04000B0	reserved XXXXXXXX XXXXXXXX XXXXXXXX XXXXXXXX				reserved XXXXXXXX XXXXXXXX XXXXXXXX XXXXXXXX			
0xB04000B8	reserved XXXXXXXX XXXXXXXX XXXXXXXX XXXXXXXX				reserved XXXXXXXX XXXXXXXX XXXXXXXX XXXXXXXX			
0xB04000C0	IRQ0_IRQVA13 XXXXXXXX XXXXXXXX XXXXXXXX XXXXXX00				reserved XXXXXXXX XXXXXXXX XXXXXXXX XXXXXXXX			
0xB04000C8	reserved XXXXXXXX XXXXXXXX XXXXXXXX XXXXXXXX				IRQ0_IRQVA14 XXXXXXXX XXXXXXXX XXXXXXXX XXXXXX00			
0xB04000D0	reserved XXXXXXXX XXXXXXXX XXXXXXXX XXXXXXXX				reserved XXXXXXXX XXXXXXXX XXXXXXXX XXXXXXXX			
0xB04000D8	reserved XXXXXXXX XXXXXXXX XXXXXXXX XXXXXXXX				reserved XXXXXXXX XXXXXXXX XXXXXXXX XXXXXXXX			
0xB04000E0	reserved XXXXXXXX XXXXXXXX XXXXXXXX XXXXXXXX				reserved XXXXXXXX XXXXXXXX XXXXXXXX XXXXXXXX			
0xB04000E8	reserved XXXXXXXX XXXXXXXX XXXXXXXX XXXXXXXX				reserved XXXXXXXX XXXXXXXX XXXXXXXX XXXXXXXX			
0xB04000F0	reserved XXXXXXXX XXXXXXXX XXXXXXXX XXXXXXXX				reserved XXXXXXXX XXXXXXXX XXXXXXXX XXXXXXXX			
0xB04000F8	reserved XXXXXXXX XXXXXXXX XXXXXXXX XXXXXXXX				reserved XXXXXXXX XXXXXXXX XXXXXXXX XXXXXXXX			
0xB0400100	reserved XXXXXXXX XXXXXXXX XXXXXXXX XXXXXXXX				reserved XXXXXXXX XXXXXXXX XXXXXXXX XXXXXXXX			
0xB0400108	IRQ0_IRQVA31 XXXXXXXX XXXXXXXX XXXXXXXX XXXXXX00				IRQ0_IRQVA30 XXXXXXXX XXXXXXXX XXXXXXXX XXXXXX00			
0xB0400110	IRQ0_IRQVA33 XXXXXXXX XXXXXXXX XXXXXXXX XXXXXX00				IRQ0_IRQVA32 XXXXXXXX XXXXXXXX XXXXXXXX XXXXXX00			
0xB0400118	IRQ0_IRQVA35 XXXXXXXX XXXXXXXX XXXXXXXX XXXXXX00				IRQ0_IRQVA34 XXXXXXXX XXXXXXXX XXXXXXXX XXXXXX00			

Table 36. Memory Layout of MEMORY_CONFIG Registers (Continued)

Offset	+7	+6	+5	+4	+3	+2	+1	+0
0xB0400120	IRQ0_IRQVA37 XXXXXXXX XXXXXXXX XXXXXXXX XXXXXX00				IRQ0_IRQVA36 XXXXXXXX XXXXXXXX XXXXXXXX XXXXXX00			
0xB0400128	reserved XXXXXXXX XXXXXXXX XXXXXXXX XXXXXXXX				IRQ0_IRQVA38 XXXXXXXX XXXXXXXX XXXXXXXX XXXXXX00			
0xB0400130	IRQ0_IRQVA41 XXXXXXXX XXXXXXXX XXXXXXXX XXXXXX00				reserved XXXXXXXX XXXXXXXX XXXXXXXX XXXXXXXX			
0xB0400138	IRQ0_IRQVA43 XXXXXXXX XXXXXXXX XXXXXXXX XXXXXX00				IRQ0_IRQVA42 XXXXXXXX XXXXXXXX XXXXXXXX XXXXXX00			
0xB0400140	IRQ0_IRQVA45 XXXXXXXX XXXXXXXX XXXXXXXX XXXXXX00				IRQ0_IRQVA44 XXXXXXXX XXXXXXXX XXXXXXXX XXXXXX00			
0xB0400148	reserved XXXXXXXX XXXXXXXX XXXXXXXX XXXXXXXX				reserved XXXXXXXX XXXXXXXX XXXXXXXX XXXXXXXX			
0xB0400150	IRQ0_IRQVA49 XXXXXXXX XXXXXXXX XXXXXXXX XXXXXX00				reserved XXXXXXXX XXXXXXXX XXXXXXXX XXXXXXXX			
0xB0400158	IRQ0_IRQVA51 XXXXXXXX XXXXXXXX XXXXXXXX XXXXXX00				IRQ0_IRQVA50 XXXXXXXX XXXXXXXX XXXXXXXX XXXXXX00			
0xB0400160	IRQ0_IRQVA53 XXXXXXXX XXXXXXXX XXXXXXXX XXXXXX00				IRQ0_IRQVA52 XXXXXXXX XXXXXXXX XXXXXXXX XXXXXX00			
0xB0400168	IRQ0_IRQVA55 XXXXXXXX XXXXXXXX XXXXXXXX XXXXXX00				IRQ0_IRQVA54 XXXXXXXX XXXXXXXX XXXXXXXX XXXXXX00			
0xB0400170	IRQ0_IRQVA57 XXXXXXXX XXXXXXXX XXXXXXXX XXXXXX00				IRQ0_IRQVA56 XXXXXXXX XXXXXXXX XXXXXXXX XXXXXX00			
0xB0400178	reserved XXXXXXXX XXXXXXXX XXXXXXXX XXXXXXXX				reserved XXXXXXXX XXXXXXXX XXXXXXXX XXXXXXXX			
0xB0400180	IRQ0_IRQVA61 XXXXXXXX XXXXXXXX XXXXXXXX XXXXXX00				reserved XXXXXXXX XXXXXXXX XXXXXXXX XXXXXXXX			
0xB0400188	IRQ0_IRQVA63 XXXXXXXX XXXXXXXX XXXXXXXX XXXXXX00				IRQ0_IRQVA62 XXXXXXXX XXXXXXXX XXXXXXXX XXXXXX00			
0xB0400190	reserved XXXXXXXX XXXXXXXX XXXXXXXX XXXXXXXX				reserved XXXXXXXX XXXXXXXX XXXXXXXX XXXXXXXX			
0xB0400198	reserved XXXXXXXX XXXXXXXX XXXXXXXX XXXXXXXX				reserved XXXXXXXX XXXXXXXX XXXXXXXX XXXXXXXX			
0xB04001A0	IRQ0_IRQVA69 XXXXXXXX XXXXXXXX XXXXXXXX XXXXXX00				reserved XXXXXXXX XXXXXXXX XXXXXXXX XXXXXXXX			
0xB04001A8	IRQ0_IRQVA71 XXXXXXXX XXXXXXXX XXXXXXXX XXXXXX00				IRQ0_IRQVA70 XXXXXXXX XXXXXXXX XXXXXXXX XXXXXX00			
0xB04001B0	IRQ0_IRQVA73 XXXXXXXX XXXXXXXX XXXXXXXX XXXXXX00				IRQ0_IRQVA72 XXXXXXXX XXXXXXXX XXXXXXXX XXXXXX00			
0xB04001B8	IRQ0_IRQVA75 XXXXXXXX XXXXXXXX XXXXXXXX XXXXXX00				IRQ0_IRQVA74 XXXXXXXX XXXXXXXX XXXXXXXX XXXXXX00			
0xB04001C0	IRQ0_IRQVA77 XXXXXXXX XXXXXXXX XXXXXXXX XXXXXX00				IRQ0_IRQVA76 XXXXXXXX XXXXXXXX XXXXXXXX XXXXXX00			
0xB04001C8	IRQ0_IRQVA79 XXXXXXXX XXXXXXXX XXXXXXXX XXXXXX00				IRQ0_IRQVA78 XXXXXXXX XXXXXXXX XXXXXXXX XXXXXX00			
0xB04001D0	IRQ0_IRQVA81 XXXXXXXX XXXXXXXX XXXXXXXX XXXXXX00				IRQ0_IRQVA80 XXXXXXXX XXXXXXXX XXXXXXXX XXXXXX00			
0xB04001D8	IRQ0_IRQVA83 XXXXXXXX XXXXXXXX XXXXXXXX XXXXXX00				IRQ0_IRQVA82 XXXXXXXX XXXXXXXX XXXXXXXX XXXXXX00			
0xB04001E0	IRQ0_IRQVA85 XXXXXXXX XXXXXXXX XXXXXXXX XXXXXX00				IRQ0_IRQVA84 XXXXXXXX XXXXXXXX XXXXXXXX XXXXXX00			
0xB04001E8	IRQ0_IRQVA87 XXXXXXXX XXXXXXXX XXXXXXXX XXXXXX00				IRQ0_IRQVA86 XXXXXXXX XXXXXXXX XXXXXXXX XXXXXX00			
0xB04001F0	IRQ0_IRQVA89 XXXXXXXX XXXXXXXX XXXXXXXX XXXXXX00				IRQ0_IRQVA88 XXXXXXXX XXXXXXXX XXXXXXXX XXXXXX00			
0xB04001F8	IRQ0_IRQVA91 XXXXXXXX XXXXXXXX XXXXXXXX XXXXXX00				IRQ0_IRQVA90 XXXXXXXX XXXXXXXX XXXXXXXX XXXXXX00			

Table 36. Memory Layout of MEMORY_CONFIG Registers (Continued)

Offset	+7	+6	+5	+4	+3	+2	+1	+0
0xB0400200	IRQ0_IRQVA93 XXXXXXXX XXXXXXXX XXXXXXXX XXXXXX00				IRQ0_IRQVA92 XXXXXXXX XXXXXXXX XXXXXXXX XXXXXX00			
0xB0400208	IRQ0_IRQVA95 XXXXXXXX XXXXXXXX XXXXXXXX XXXXXX00				IRQ0_IRQVA94 XXXXXXXX XXXXXXXX XXXXXXXX XXXXXX00			
0xB0400210	IRQ0_IRQVA97 XXXXXXXX XXXXXXXX XXXXXXXX XXXXXX00				IRQ0_IRQVA96 XXXXXXXX XXXXXXXX XXXXXXXX XXXXXX00			
0xB0400218	IRQ0_IRQVA99 XXXXXXXX XXXXXXXX XXXXXXXX XXXXXX00				IRQ0_IRQVA98 XXXXXXXX XXXXXXXX XXXXXXXX XXXXXX00			
0xB0400220	IRQ0_IRQVA101 XXXXXXXX XXXXXXXX XXXXXXXX XXXXXX00				IRQ0_IRQVA100 XXXXXXXX XXXXXXXX XXXXXXXX XXXXXX00			
0xB0400228	reserved XXXXXXXX XXXXXXXX XXXXXXXX XXXX0000				IRQ0_IRQVA102 XXXXXXXX XXXXXXXX XXXXXXXX XXXXXX00			
0xB0400230	IRQ0_IRQVA105 XXXXXXXX XXXXXXXX XXXXXXXX XXXXXX00				IRQ0_IRQVA104 XXXXXXXX XXXXXXXX XXXXXXXX XXXXXX00			
0xB0400238	IRQ0_IRQVA107 XXXXXXXX XXXXXXXX XXXXXXXX XXXXXX00				IRQ0_IRQVA106 XXXXXXXX XXXXXXXX XXXXXXXX XXXXXX00			
0xB0400240	reserved XXXXXXXX XXXXXXXX XXXXXXXX XXXXXXXX				reserved XXXXXXXX XXXXXXXX XXXXXXXX XXXXXXXX			
0xB0400248	reserved XXXXXXXX XXXXXXXX XXXXXXXX XXXXXXXX				reserved XXXXXXXX XXXXXXXX XXXXXXXX XXXXXXXX			
0xB0400250	IRQ0_IRQVA113 XXXXXXXX XXXXXXXX XXXXXXXX XXXXXX00				IRQ0_IRQVA112 XXXXXXXX XXXXXXXX XXXXXXXX XXXXXX00			
0xB0400258	IRQ0_IRQVA115 XXXXXXXX XXXXXXXX XXXXXXXX XXXXXX00				IRQ0_IRQVA114 XXXXXXXX XXXXXXXX XXXXXXXX XXXXXX00			
0xB0400260	reserved XXXXXXXX XXXXXXXX XXXXXXXX XXXXXXXX				reserved XXXXXXXX XXXXXXXX XXXXXXXX XXXXXXXX			
0xB0400268	reserved XXXXXXXX XXXXXXXX XXXXXXXX XXXXXXXX				reserved XXXXXXXX XXXXXXXX XXXXXXXX XXXXXXXX			
0xB0400270	reserved XXXXXXXX XXXXXXXX XXXXXXXX XXXXXXXX				reserved XXXXXXXX XXXXXXXX XXXXXXXX XXXXXXXX			
0xB0400278	reserved XXXXXXXX XXXXXXXX XXXXXXXX XXXXXXXX				reserved XXXXXXXX XXXXXXXX XXXXXXXX XXXXXXXX			
0xB0400280	IRQ0_IRQVA125 XXXXXXXX XXXXXXXX XXXXXXXX XXXXXX00				IRQ0_IRQVA124 XXXXXXXX XXXXXXXX XXXXXXXX XXXXXX00			
0xB0400288	IRQ0_IRQVA127 XXXXXXXX XXXXXXXX XXXXXXXX XXXXXX00				IRQ0_IRQVA126 XXXXXXXX XXXXXXXX XXXXXXXX XXXXXX00			
0xB0400290	reserved XXXXXXXX XXXXXXXX XXXXXXXX XXXXXXXX				reserved XXXXXXXX XXXXXXXX XXXXXXXX XXXXXXXX			
0xB0400298	reserved XXXXXXXX XXXXXXXX XXXXXXXX XXXXXXXX				reserved XXXXXXXX XXXXXXXX XXXXXXXX XXXXXXXX			
0xB04002A0	IRQ0_IRQVA133 XXXXXXXX XXXXXXXX XXXXXXXX XXXXXX00				IRQ0_IRQVA132 XXXXXXXX XXXXXXXX XXXXXXXX XXXXXX00			
0xB04002A8	IRQ0_IRQVA135 XXXXXXXX XXXXXXXX XXXXXXXX XXXXXX00				IRQ0_IRQVA134 XXXXXXXX XXXXXXXX XXXXXXXX XXXXXX00			
0xB04002B0	IRQ0_IRQVA137 XXXXXXXX XXXXXXXX XXXXXXXX XXXXXX00				IRQ0_IRQVA136 XXXXXXXX XXXXXXXX XXXXXXXX XXXXXX00			
0xB04002B8	IRQ0_IRQVA139 XXXXXXXX XXXXXXXX XXXXXXXX XXXXXX00				IRQ0_IRQVA138 XXXXXXXX XXXXXXXX XXXXXXXX XXXXXX00			
0xB04002C0	reserved XXXXXXXX XXXXXXXX XXXXXXXX XXXXXXXX				reserved XXXXXXXX XXXXXXXX XXXXXXXX XXXXXXXX			
0xB04002C8	reserved XXXXXXXX XXXXXXXX XXXXXXXX XXXXXXXX				reserved XXXXXXXX XXXXXXXX XXXXXXXX XXXXXXXX			
0xB04002D0	IRQ0_IRQVA145 XXXXXXXX XXXXXXXX XXXXXXXX XXXXXX00				IRQ0_IRQVA144 XXXXXXXX XXXXXXXX XXXXXXXX XXXXXX00			
0xB04002D8	IRQ0_IRQVA147 XXXXXXXX XXXXXXXX XXXXXXXX XXXXXX00				IRQ0_IRQVA146 XXXXXXXX XXXXXXXX XXXXXXXX XXXXXX00			
0xB04002E0	reserved XXXXXXXX XXXXXXXX XXXXXXXX XXXXXXXX				reserved XXXXXXXX XXXXXXXX XXXXXXXX XXXXXXXX			

Table 36. Memory Layout of MEMORY_CONFIG Registers (Continued)

Offset	+7	+6	+5	+4	+3	+2	+1	+0
0xB04002E8	reserved XXXXXXXX XXXXXXXX XXXXXXXX XXXXXXXX				reserved XXXXXXXX XXXXXXXX XXXXXXXX XXXXXXXX			
0xB04002F0	IRQ0_IRQVA153 XXXXXXXX XXXXXXXX XXXXXXXX XXXXXX00				IRQ0_IRQVA152 XXXXXXXX XXXXXXXX XXXXXXXX XXXXXX00			
0xB04002F8	reserved XXXXXXXX XXXXXXXX XXXXXXXX XXXXXXXX				IRQ0_IRQVA154 XXXXXXXX XXXXXXXX XXXXXXXX XXXXXX00			
0xB0400300	reserved XXXXXXXX XXXXXXXX XXXXXXXX XXXXXXXX				reserved XXXXXXXX XXXXXXXX XXXXXXXX XXXXXXXX			
0xB0400308	IRQ0_IRQVA159 XXXXXXXX XXXXXXXX XXXXXXXX XXXXXX00				IRQ0_IRQVA158 XXXXXXXX XXXXXXXX XXXXXXXX XXXXXX00			
0xB0400310	reserved XXXXXXXX XXXXXXXX XXXXXXXX XXXXXXXX				IRQ0_IRQVA160 XXXXXXXX XXXXXXXX XXXXXXXX XXXXXX00			
0xB0400318	reserved XXXXXXXX XXXXXXXX XXXXXXXX XXXXXXXX				reserved XXXXXXXX XXXXXXXX XXXXXXXX XXXXXXXX			
0xB0400320	IRQ0_IRQVA165 XXXXXXXX XXXXXXXX XXXXXXXX XXXXXX00				IRQ0_IRQVA164 XXXXXXXX XXXXXXXX XXXXXXXX XXXXXX00			
0xB0400328	IRQ0_IRQVA167 XXXXXXXX XXXXXXXX XXXXXXXX XXXXXX00				IRQ0_IRQVA166 XXXXXXXX XXXXXXXX XXXXXXXX XXXXXX00			
0xB0400330	IRQ0_IRQVA169 XXXXXXXX XXXXXXXX XXXXXXXX XXXXXX00				IRQ0_IRQVA168 XXXXXXXX XXXXXXXX XXXXXXXX XXXXXX00			
0xB0400338	IRQ0_IRQVA171 XXXXXXXX XXXXXXXX XXXXXXXX XXXXXX00				IRQ0_IRQVA170 XXXXXXXX XXXXXXXX XXXXXXXX XXXXXX00			
0xB0400340	IRQ0_IRQVA173 XXXXXXXX XXXXXXXX XXXXXXXX XXXXXX00				IRQ0_IRQVA172 XXXXXXXX XXXXXXXX XXXXXXXX XXXXXX00			
0xB0400348	IRQ0_IRQVA175 XXXXXXXX XXXXXXXX XXXXXXXX XXXXXX00				IRQ0_IRQVA174 XXXXXXXX XXXXXXXX XXXXXXXX XXXXXX00			
0xB0400350	IRQ0_IRQVA177 XXXXXXXX XXXXXXXX XXXXXXXX XXXXXX00				IRQ0_IRQVA176 XXXXXXXX XXXXXXXX XXXXXXXX XXXXXX00			
0xB0400358	IRQ0_IRQVA179 XXXXXXXX XXXXXXXX XXXXXXXX XXXXXX00				IRQ0_IRQVA178 XXXXXXXX XXXXXXXX XXXXXXXX XXXXXX00			
0xB0400360	IRQ0_IRQVA181 XXXXXXXX XXXXXXXX XXXXXXXX XXXXXX00				IRQ0_IRQVA180 XXXXXXXX XXXXXXXX XXXXXXXX XXXXXX00			
0xB0400368	IRQ0_IRQVA183 XXXXXXXX XXXXXXXX XXXXXXXX XXXXXX00				IRQ0_IRQVA182 XXXXXXXX XXXXXXXX XXXXXXXX XXXXXX00			
0xB0400370	IRQ0_IRQVA185 XXXXXXXX XXXXXXXX XXXXXXXX XXXXXX00				IRQ0_IRQVA184 XXXXXXXX XXXXXXXX XXXXXXXX XXXXXX00			
0xB0400378	IRQ0_IRQVA187 XXXXXXXX XXXXXXXX XXXXXXXX XXXXXX00				IRQ0_IRQVA186 XXXXXXXX XXXXXXXX XXXXXXXX XXXXXX00			
0xB0400380	reserved XXXXXXXX XXXXXXXX XXXXXXXX XXXXXXXX				reserved XXXXXXXX XXXXXXXX XXXXXXXX XXXXXXXX			
0xB0400388	reserved XXXXXXXX XXXXXXXX XXXXXXXX XXXXXXXX				reserved XXXXXXXX XXXXXXXX XXXXXXXX XXXXXXXX			
0xB0400390	reserved XXXXXXXX XXXXXXXX XXXXXXXX XXXXXXXX				reserved XXXXXXXX XXXXXXXX XXXXXXXX XXXXXXXX			
0xB0400398	IRQ0_IRQVA195 XXXXXXXX XXXXXXXX XXXXXXXX XXXXXX00				IRQ0_IRQVA194 XXXXXXXX XXXXXXXX XXXXXXXX XXXXXX00			
0xB04003A0	reserved XXXXXXXX XXXXXXXX XXXXXXXX XXXXXXXX				reserved XXXXXXXX XXXXXXXX XXXXXXXX XXXXXXXX			
0xB04003A8	IRQ0_IRQVA199 XXXXXXXX XXXXXXXX XXXXXXXX XXXXXX00				IRQ0_IRQVA198 XXXXXXXX XXXXXXXX XXXXXXXX XXXXXX00			
0xB04003B0	reserved XXXXXXXX XXXXXXXX XXXXXXXX XXXXXXXX				reserved XXXXXXXX XXXXXXXX XXXXXXXX XXXXXXXX			
0xB04003B8	IRQ0_IRQVA203 XXXXXXXX XXXXXXXX XXXXXXXX XXXXXX00				IRQ0_IRQVA202 XXXXXXXX XXXXXXXX XXXXXXXX XXXXXX00			
0xB04003C0	reserved XXXXXXXX XXXXXXXX XXXXXXXX XXXXXXXX				reserved XXXXXXXX XXXXXXXX XXXXXXXX XXXXXXXX			
0xB04003C8	reserved XXXXXXXX XXXXXXXX XXXXXXXX XXXXXXXX				IRQ0_IRQVA206 XXXXXXXX XXXXXXXX XXXXXXXX XXXXXX00			
0xB04003D0	IRQ0_IRQVA209 XXXXXXXX XXXXXXXX XXXXXXXX XXXXXX00				IRQ0_IRQVA208 XXXXXXXX XXXXXXXX XXXXXXXX XXXXXX00			

Table 36. Memory Layout of MEMORY_CONFIG Registers (Continued)

Offset	+7	+6	+5	+4	+3	+2	+1	+0
0xB04003D8	IRQ0_IRQVA211 XXXXXXXX XXXXXXXX XXXXXXXX XXXXXX00				IRQ0_IRQVA210 XXXXXXXX XXXXXXXX XXXXXXXX XXXXXX00			
0xB04003E0	IRQ0_IRQVA213 XXXXXXXX XXXXXXXX XXXXXXXX XXXXXX00				IRQ0_IRQVA212 XXXXXXXX XXXXXXXX XXXXXXXX XXXXXX00			
0xB04003E8	IRQ0_IRQVA215 XXXXXXXX XXXXXXXX XXXXXXXX XXXXXX00				IRQ0_IRQVA214 XXXXXXXX XXXXXXXX XXXXXXXX XXXXXX00			
0xB04003F0	IRQ0_IRQVA217 XXXXXXXX XXXXXXXX XXXXXXXX XXXXXX00				IRQ0_IRQVA216 XXXXXXXX XXXXXXXX XXXXXXXX XXXXXX00			
0xB04003F8	IRQ0_IRQVA219 XXXXXXXX XXXXXXXX XXXXXXXX XXXXXX00				IRQ0_IRQVA218 XXXXXXXX XXXXXXXX XXXXXXXX XXXXXX00			
0xB0400400	IRQ0_IRQVA221 XXXXXXXX XXXXXXXX XXXXXXXX XXXXXX00				IRQ0_IRQVA220 XXXXXXXX XXXXXXXX XXXXXXXX XXXXXX00			
0xB0400408	IRQ0_IRQVA223 XXXXXXXX XXXXXXXX XXXXXXXX XXXXXX00				IRQ0_IRQVA222 XXXXXXXX XXXXXXXX XXXXXXXX XXXXXX00			
0xB0400410	reserved XXXXXXXX XXXXXXXX XXXXXXXX XXXXXXXX				reserved XXXXXXXX XXXXXXXX XXXXXXXX XXXXXXXX			
0xB0400418	reserved XXXXXXXX XXXXXXXX XXXXXXXX XXXXXXXX				reserved XXXXXXXX XXXXXXXX XXXXXXXX XXXXXXXX			
0xB0400420	reserved XXXXXXXX XXXXXXXX XXXXXXXX XXXXXXXX				reserved XXXXXXXX XXXXXXXX XXXXXXXX XXXXXXXX			
0xB0400428	reserved XXXXXXXX XXXXXXXX XXXXXXXX XXXXXXXX				reserved XXXXXXXX XXXXXXXX XXXXXXXX XXXXXXXX			
0xB0400430	IRQ0_IRQVA233 XXXXXXXX XXXXXXXX XXXXXXXX XXXXXX00				IRQ0_IRQVA232 XXXXXXXX XXXXXXXX XXXXXXXX XXXXXX00			
0xB0400438	IRQ0_IRQVA235 XXXXXXXX XXXXXXXX XXXXXXXX XXXXXX00				IRQ0_IRQVA234 XXXXXXXX XXXXXXXX XXXXXXXX XXXXXX00			
0xB0400440	IRQ0_IRQVA237 XXXXXXXX XXXXXXXX XXXXXXXX XXXXXX00				IRQ0_IRQVA236 XXXXXXXX XXXXXXXX XXXXXXXX XXXXXX00			
0xB0400448	IRQ0_IRQVA239 XXXXXXXX XXXXXXXX XXXXXXXX XXXXXX00				IRQ0_IRQVA238 XXXXXXXX XXXXXXXX XXXXXXXX XXXXXX00			
0xB0400450 - 0xB0400888	reserved XXXXXXXX XXXXXXXX XXXXXXXX XXXXXXXX				reserved XXXXXXXX XXXXXXXX XXXXXXXX XXXXXXXX			
0xB0400890	IRQ0_NMIPL1 00000000 00000000 00001111 00001111				IRQ0_NMIPL0 00001111 00001111 00001111 00000000			
0xB0400898	IRQ0_NMIPL3 00000000 00000000 00001111 00001111				IRQ0_NMIPL2 00001111 00000000 00001111 00000000			
0xB04008A0	reserved XXXXXXXX XXXXXXXX XXXXXXXX XXXXXXXX				reserved XXXXXXXX XXXXXXXX XXXXXXXX XXXXXXXX			
0xB04008A8	reserved XXXXXXXX XXXXXXXX XXXXXXXX XXXXXXXX				reserved XXXXXXXX XXXXXXXX XXXXXXXX XXXXXXXX			
0xB04008B0	reserved XXXXXXXX XXXXXXXX XXXXXXXX XXXXXXXX				IRQ0_IRQPL0 00000000 00000000 00011111 00011111			
0xB04008B8	IRQ0_IRQPL3 00000000 00011111 00011111 00000000				reserved XXXXXXXX XXXXXXXX XXXXXXXX XXXXXXXX			
0xB04008C0	reserved XXXXXXXX XXXXXXXX XXXXXXXX XXXXXXXX				reserved XXXXXXXX XXXXXXXX XXXXXXXX XXXXXXXX			
0xB04008C8	IRQ0_IRQPL7 00011111 00011111 00000000 00000000				reserved XXXXXXXX XXXXXXXX XXXXXXXX XXXXXXXX			
0xB04008D0	IRQ0_IRQPL9 00000000 00011111 00011111 00011111				IRQ0_IRQPL8 00011111 00011111 00011111 00011111			
0xB04008D8	IRQ0_IRQPL11 00000000 00000000 00011111 00011111				IRQ0_IRQPL10 00011111 00011111 00011111 00000000			
0xB04008E0	IRQ0_IRQPL13 00011111 00011111 00011111 00011111				IRQ0_IRQPL12 00011111 00011111 00011111 00000000			
0xB04008E8	IRQ0_IRQPL15 00011111 00011111 00011111 00000000				IRQ0_IRQPL14 00000000 00000000 00011111 00011111			

Table 36. Memory Layout of MEMORY_CONFIG Registers (Continued)

Offset	+7	+6	+5	+4	+3	+2	+1	+0
0xB04008F0	IRQ0_IRQPL17 00011111 00011111 00011111 00000000				reserved XXXXXXXX XXXXXXXX XXXXXXXX XXXXXXXX			
0xB04008F8	IRQ0_IRQPL19 00011111 00011111 00011111 00011111				IRQ0_IRQPL18 00011111 00011111 00011111 00011111			
0xB0400900	IRQ0_IRQPL21 00011111 00011111 00011111 00011111				IRQ0_IRQPL20 00011111 00011111 00011111 00011111			
0xB0400908	IRQ0_IRQPL23 00011111 00011111 00011111 00011111				IRQ0_IRQPL22 00011111 00011111 00011111 00011111			
0xB0400910	IRQ0_IRQPL25 00000000 00011111 00011111 00011111				IRQ0_IRQPL24 00011111 00011111 00011111 00011111			
0xB0400918	reserved XXXXXXXX XXXXXXXX XXXXXXXX XXXXXXXX				IRQ0_IRQPL26 00011111 00011111 00011111 00011111			
0xB0400920	reserved XXXXXXXX XXXXXXXX XXXXXXXX XXXXXXXX				IRQ0_IRQPL28 00011111 00011111 00011111 00011111			
0xB0400928	IRQ0_IRQPL31 00011111 00011111 00000000 00000000				reserved XXXXXXXX XXXXXXXX XXXXXXXX XXXXXXXX			
0xB0400930	IRQ0_IRQPL33 00011111 00011111 00011111 00011111				reserved XXXXXXXX XXXXXXXX XXXXXXXX XXXXXXXX			
0xB0400938	reserved XXXXXXXX XXXXXXXX XXXXXXXX XXXXXXXX				IRQ0_IRQPL34 00011111 00011111 00011111 00011111			
0xB0400940	reserved XXXXXXXX XXXXXXXX XXXXXXXX XXXXXXXX				IRQ0_IRQPL36 00011111 00011111 00011111 00011111			
0xB0400948	IRQ0_IRQPL39 00011111 00011111 00000000 00000000				IRQ0_IRQPL38 00000000 00011111 00011111 00011111			
0xB0400950	IRQ0_IRQPL41 00011111 00011111 00011111 00011111				IRQ0_IRQPL40 00000000 00000000 00000000 00011111			
0xB0400958	IRQ0_IRQPL43 00011111 00011111 00011111 00011111				IRQ0_IRQPL42 00011111 00011111 00011111 00011111			
0xB0400960	IRQ0_IRQPL45 00011111 00011111 00011111 00011111				IRQ0_IRQPL44 00011111 00011111 00011111 00011111			
0xB0400968	reserved XXXXXXXX XXXXXXXX XXXXXXXX XXXXXXXX				IRQ0_IRQPL46 00011111 00011111 00011111 00011111			
0xB0400970	IRQ0_IRQPL49 00011111 00011111 00000000 00000000				IRQ0_IRQPL48 00011111 00011111 00000000 00000000			
0xB0400978	IRQ0_IRQPL51 00000000 00011111 00000000 00000000				IRQ0_IRQPL50 00011111 00011111 00000000 00000000			
0xB0400980	IRQ0_IRQPL53 00011111 00011111 00011111 00011111				IRQ0_IRQPL52 00011111 00011111 00011111 00011111			
0xB0400988	IRQ0_IRQPL55 00011111 00011111 00011111 00011111				IRQ0_IRQPL54 00011111 00011111 00011111 00011111			
0xB0400990	reserved XXXXXXXX XXXXXXXX XXXXXXXX XXXXXXXX				reserved XXXXXXXX XXXXXXXX XXXXXXXX XXXXXXXX			
0xB0400998	IRQ0_IRQPL59 00011111 00011111 00011111 00011111				IRQ0_IRQPL58 00011111 00011111 00011111 00011111			
0xB04009A0 - 0xB0400AA8	reserved XXXXXXXX XXXXXXXX XXXXXXXX XXXXXXXX				reserved XXXXXXXX XXXXXXXX XXXXXXXX XXXXXXXX			
0xB0400AB0	IRQ0_NMIR 00000000 00000000 00000000 00000000				IRQ0_NMIS 00000000 00000000 00000000 00000000			
0xB0400AB8	read0 00000000 00000000 00000000 00000000				IRQ0_NMISIS 00000000 00000000 00000000 00000000			
0xB0400AC0	IRQ0_IRQS1 00000000 00000000 00000000 00000000				IRQ0_IRQS0 00000000 00000000 00000000 00000000			
0xB0400AC8	IRQ0_IRQS3 00000000 00000000 00000000 00000000				IRQ0_IRQS2 00000000 00000000 00000000 00000000			
0xB0400AD0	IRQ0_IRQS5 00000000 00000000 00000000 00000000				IRQ0_IRQS4 00000000 00000000 00000000 00000000			

Table 36. Memory Layout of MEMORY_CONFIG Registers (Continued)

Offset	+7	+6	+5	+4	+3	+2	+1	+0
0xB0400AD8	IRQ0_IRQS7 00000000 00000000 00000000 00000000				IRQ0_IRQS6 00000000 00000000 00000000 00000000			
0xB0400AE0	reserved XXXXXXXX XXXXXXXX XXXXXXXX XXXXXXXX				reserved XXXXXXXX XXXXXXXX XXXXXXXX XXXXXXXX			
0xB0400AE8	reserved XXXXXXXX XXXXXXXX XXXXXXXX XXXXXXXX				reserved XXXXXXXX XXXXXXXX XXXXXXXX XXXXXXXX			
0xB0400AF0	reserved XXXXXXXX XXXXXXXX XXXXXXXX XXXXXXXX				reserved XXXXXXXX XXXXXXXX XXXXXXXX XXXXXXXX			
0xB0400AF8	reserved XXXXXXXX XXXXXXXX XXXXXXXX XXXXXXXX				reserved XXXXXXXX XXXXXXXX XXXXXXXX XXXXXXXX			
0xB0400B00	IRQ0_IRQR1 00000000 00000000 00000000 00000000				IRQ0_IRQR0 00000000 00000000 00000000 00000000			
0xB0400B08	IRQ0_IRQR3 00000000 00000000 00000000 00000000				IRQ0_IRQR2 00000000 00000000 00000000 00000000			
0xB0400B10	IRQ0_IRQR5 00000000 00000000 00000000 00000000				IRQ0_IRQR4 00000000 00000000 00000000 00000000			
0xB0400B18	IRQ0_IRQR7 00000000 00000000 00000000 00000000				IRQ0_IRQR6 00000000 00000000 00000000 00000000			
0xB0400B20	reserved XXXXXXXX XXXXXXXX XXXXXXXX XXXXXXXX				reserved XXXXXXXX XXXXXXXX XXXXXXXX XXXXXXXX			
0xB0400B28	reserved XXXXXXXX XXXXXXXX XXXXXXXX XXXXXXXX				reserved XXXXXXXX XXXXXXXX XXXXXXXX XXXXXXXX			
0xB0400B30	reserved XXXXXXXX XXXXXXXX XXXXXXXX XXXXXXXX				reserved XXXXXXXX XXXXXXXX XXXXXXXX XXXXXXXX			
0xB0400B38	reserved XXXXXXXX XXXXXXXX XXXXXXXX XXXXXXXX				reserved XXXXXXXX XXXXXXXX XXXXXXXX XXXXXXXX			
0xB0400B40	IRQ0_IRQSIS1 00000000 00000000 00000000 00000000				IRQ0_IRQSIS0 00000000 00000000 00000000 00000000			
0xB0400B48	IRQ0_IRQSIS3 00000000 00000000 00000000 00000000				IRQ0_IRQSIS2 00000000 00000000 00000000 00000000			
0xB0400B50	IRQ0_IRQSIS5 00000000 00000000 00000000 00000000				IRQ0_IRQSIS4 00000000 00000000 00000000 00000000			
0xB0400B58	IRQ0_IRQSIS7 00000000 00000000 00000000 00000000				IRQ0_IRQSIS6 00000000 00000000 00000000 00000000			
0xB0400B60	reserved XXXXXXXX XXXXXXXX XXXXXXXX XXXXXXXX				reserved XXXXXXXX XXXXXXXX XXXXXXXX XXXXXXXX			
0xB0400B68	reserved XXXXXXXX XXXXXXXX XXXXXXXX XXXXXXXX				reserved XXXXXXXX XXXXXXXX XXXXXXXX XXXXXXXX			
0xB0400B70	reserved XXXXXXXX XXXXXXXX XXXXXXXX XXXXXXXX				reserved XXXXXXXX XXXXXXXX XXXXXXXX XXXXXXXX			
0xB0400B78	reserved XXXXXXXX XXXXXXXX XXXXXXXX XXXXXXXX				reserved XXXXXXXX XXXXXXXX XXXXXXXX XXXXXXXX			
0xB0400B80	IRQ0_IRQCES1 00000000 00000000 00000000 00000000				IRQ0_IRQCES0 00000000 00000000 00000000 00000000			
0xB0400B88	IRQ0_IRQCES3 00000000 00000000 00000000 00000000				IRQ0_IRQCES2 00000000 00000000 00000000 00000000			
0xB0400B90	IRQ0_IRQCES5 00000000 00000000 00000000 00000000				IRQ0_IRQCES4 00000000 00000000 00000000 00000000			
0xB0400B98	IRQ0_IRQCES7 00000000 00000000 00000000 00000000				IRQ0_IRQCES6 00000000 00000000 00000000 00000000			
0xB0400BA0	reserved XXXXXXXX XXXXXXXX XXXXXXXX XXXXXXXX				reserved XXXXXXXX XXXXXXXX XXXXXXXX XXXXXXXX			
0xB0400BA8	reserved XXXXXXXX XXXXXXXX XXXXXXXX XXXXXXXX				reserved XXXXXXXX XXXXXXXX XXXXXXXX XXXXXXXX			
0xB0400BB0	reserved XXXXXXXX XXXXXXXX XXXXXXXX XXXXXXXX				reserved XXXXXXXX XXXXXXXX XXXXXXXX XXXXXXXX			

Table 36. Memory Layout of MEMORY_CONFIG Registers (Continued)

Offset	+7	+6	+5	+4	+3	+2	+1	+0
0xB0400BB8	reserved XXXXXXXX XXXXXXXX XXXXXXXX XXXXXXXX				reserved XXXXXXXX XXXXXXXX XXXXXXXX XXXXXXXX			
0xB0400BC0	IRQ0_IRQCEC1 00000000 00000000 00000000 00000000				IRQ0_IRQCEC0 00000000 00000000 00000000 00000000			
0xB0400BC8	IRQ0_IRQCEC3 00000000 00000000 00000000 00000000				IRQ0_IRQCEC2 00000000 00000000 00000000 00000000			
0xB0400BD0	IRQ0_IRQCEC5 00000000 00000000 00000000 00000000				IRQ0_IRQCEC4 00000000 00000000 00000000 00000000			
0xB0400BD8	IRQ0_IRQCEC7 00000000 00000000 00000000 00000000				IRQ0_IRQCEC6 00000000 00000000 00000000 00000000			
0xB0400BE0	reserved XXXXXXXX XXXXXXXX XXXXXXXX XXXXXXXX				reserved XXXXXXXX XXXXXXXX XXXXXXXX XXXXXXXX			
0xB0400BE8	reserved XXXXXXXX XXXXXXXX XXXXXXXX XXXXXXXX				reserved XXXXXXXX XXXXXXXX XXXXXXXX XXXXXXXX			
0xB0400BF0	reserved XXXXXXXX XXXXXXXX XXXXXXXX XXXXXXXX				reserved XXXXXXXX XXXXXXXX XXXXXXXX XXXXXXXX			
0xB0400BF8	reserved XXXXXXXX XXXXXXXX XXXXXXXX XXXXXXXX				reserved XXXXXXXX XXXXXXXX XXXXXXXX XXXXXXXX			
0xB0400C00	IRQ0_IRQCE1 00000000 00000000 00000000 00000000				IRQ0_IRQCE0 00000000 00000000 00000000 00000000			
0xB0400C08	IRQ0_IRQCE3 00000000 00000000 00000000 00000000				IRQ0_IRQCE2 00000000 00000000 00000000 00000000			
0xB0400C10	IRQ0_IRQCE5 00000000 00000000 00000000 00000000				IRQ0_IRQCE4 00000000 00000000 00000000 00000000			
0xB0400C18	IRQ0_IRQCE7 00000000 00000000 00000000 00000000				IRQ0_IRQCE6 00000000 00000000 00000000 00000000			
0xB0400C20	reserved XXXXXXXX XXXXXXXX XXXXXXXX XXXXXXXX				reserved XXXXXXXX XXXXXXXX XXXXXXXX XXXXXXXX			
0xB0400C28	reserved XXXXXXXX XXXXXXXX XXXXXXXX XXXXXXXX				reserved XXXXXXXX XXXXXXXX XXXXXXXX XXXXXXXX			
0xB0400C30	reserved XXXXXXXX XXXXXXXX XXXXXXXX XXXXXXXX				reserved XXXXXXXX XXXXXXXX XXXXXXXX XXXXXXXX			
0xB0400C38	reserved XXXXXXXX XXXXXXXX XXXXXXXX XXXXXXXX				reserved XXXXXXXX XXXXXXXX XXXXXXXX XXXXXXXX			
0xB0400C40	IRQ0_NMIHS 00000000 00000000 00000000 00000000				IRQ0_NMIHC 00000000 00000000 00000000 00000000			
0xB0400C48	read0 00000000 00000000 00000000 00000000				IRQ0_IRQHC 00000000 00000000 00000000 00000000			
0xB0400C50	IRQ0_IRQHS1 00000000 00000000 00000000 00000000				IRQ0_IRQHS0 00000000 00000000 00000000 00000000			
0xB0400C58	IRQ0_IRQHS3 00000000 00000000 00000000 00000000				IRQ0_IRQHS2 00000000 00000000 00000000 00000000			
0xB0400C60	IRQ0_IRQHS5 00000000 00000000 00000000 00000000				IRQ0_IRQHS4 00000000 00000000 00000000 00000000			
0xB0400C68	IRQ0_IRQHS7 00000000 00000000 00000000 00000000				IRQ0_IRQHS6 00000000 00000000 00000000 00000000			
0xB0400C70	reserved XXXXXXXX XXXXXXXX XXXXXXXX XXXXXXXX				reserved XXXXXXXX XXXXXXXX XXXXXXXX XXXXXXXX			
0xB0400C78	reserved XXXXXXXX XXXXXXXX XXXXXXXX XXXXXXXX				reserved XXXXXXXX XXXXXXXX XXXXXXXX XXXXXXXX			
0xB0400C80	reserved XXXXXXXX XXXXXXXX XXXXXXXX XXXXXXXX				reserved XXXXXXXX XXXXXXXX XXXXXXXX XXXXXXXX			
0xB0400C88	reserved XXXXXXXX XXXXXXXX XXXXXXXX XXXXXXXX				reserved XXXXXXXX XXXXXXXX XXXXXXXX XXXXXXXX			
0xB0400C90	read0 00000000 00000000 00000000 00000000				IRQ0_IRQPLM 00000000 00000000 00000000 00100000			

Table 36. Memory Layout of MEMORY_CONFIG Registers (Continued)

Offset	+7	+6	+5	+4	+3	+2	+1	+0
0xB0400C98	read0 00000000 00000000 00000000 00000000				IRQ0_CSR 00000000 00000001 00000000 00000000			
0xB0400CA0	read0 00000000 00000000 00000000 00000000				IRQ0_NESTL 00000000 00000000 00000000 00000000			
0xB0400CA8	IRQ0_NMIPS 00000000 00000000 00000000 00000000				IRQ0_NMIRS 00000000 00000000 00000000 00000000			
0xB0400CB0	IRQ0_IRQRS1 00000000 00000000 00000000 00000000				IRQ0_IRQRS0 00000000 00000000 00000000 00000000			
0xB0400CB8	IRQ0_IRQRS3 00000000 00000000 00000000 00000000				IRQ0_IRQRS2 00000000 00000000 00000000 00000000			
0xB0400CC0	IRQ0_IRQRS5 00000000 00000000 00000000 00000000				IRQ0_IRQRS4 00000000 00000000 00000000 00000000			
0xB0400CC8	IRQ0_IRQRS7 00000000 00000000 00000000 00000000				IRQ0_IRQRS6 00000000 00000000 00000000 00000000			
0xB0400CD0	reserved XXXXXXXX XXXXXXXX XXXXXXXX XXXXXXXX				reserved XXXXXXXX XXXXXXXX XXXXXXXX XXXXXXXX			
0xB0400CD8	reserved XXXXXXXX XXXXXXXX XXXXXXXX XXXXXXXX				reserved XXXXXXXX XXXXXXXX XXXXXXXX XXXXXXXX			
0xB0400CE0	reserved XXXXXXXX XXXXXXXX XXXXXXXX XXXXXXXX				reserved XXXXXXXX XXXXXXXX XXXXXXXX XXXXXXXX			
0xB0400CE8	reserved XXXXXXXX XXXXXXXX XXXXXXXX XXXXXXXX				reserved XXXXXXXX XXXXXXXX XXXXXXXX XXXXXXXX			
0xB0400CF0	IRQ0_IRQPS1 00000000 00000000 00000000 00000000				IRQ0_IRQPS0 00000000 00000000 00000000 00000000			
0xB0400CF8	IRQ0_IRQPS3 00000000 00000000 00000000 00000000				IRQ0_IRQPS2 00000000 00000000 00000000 00000000			
0xB0400D00	IRQ0_IRQPS5 00000000 00000000 00000000 00000000				IRQ0_IRQPS4 00000000 00000000 00000000 00000000			
0xB0400D08	IRQ0_IRQPS7 00000000 00000000 00000000 00000000				IRQ0_IRQPS6 00000000 00000000 00000000 00000000			
0xB0400D10	reserved XXXXXXXX XXXXXXXX XXXXXXXX XXXXXXXX				reserved XXXXXXXX XXXXXXXX XXXXXXXX XXXXXXXX			
0xB0400D18	reserved XXXXXXXX XXXXXXXX XXXXXXXX XXXXXXXX				reserved XXXXXXXX XXXXXXXX XXXXXXXX XXXXXXXX			
0xB0400D20	reserved XXXXXXXX XXXXXXXX XXXXXXXX XXXXXXXX				reserved XXXXXXXX XXXXXXXX XXXXXXXX XXXXXXXX			
0xB0400D28	reserved XXXXXXXX XXXXXXXX XXXXXXXX XXXXXXXX				reserved XXXXXXXX XXXXXXXX XXXXXXXX XXXXXXXX			
0xB0400D30	read0 00000000 00000000 00000000 00000000				IRQ0_UNLOCK 00000000 00000000 00000000 00000000			
0xB0400D38	read0 00000000 00000000 00000000 00000000				IRQ0_MID 00000000 00000000 00000000 00000000			
0xB0400D40	IRQ0_EAN 00000000 00000000 00000000 00000000				IRQ0_EEI 00000000 00000000 00000000 00000000			
0xB0400D48	IRQ0_EEB0 00000000 00000000 00000000 00000000				IRQ0_ET 00000000 00000000 00000000 00000000			
0xB0400D50	IRQ0_EEB2 00000000 00000000 00000000 00000000				IRQ0_EEB1 00000000 00000000 00000000 00000000			
0xB0400D58- B0407FF8	reserved XXXXXXXX XXXXXXXX XXXXXXXX XXXXXXXX XXXXXXXX XXXXXXXX XXXXXXXX XXXXXXXX							
0xB0408000	TPU0_LST 00000000 00000000 00000000 00000001				TPU0_UNLOCK 00000000 00000000 00000000 00000000			
0xB0408008	TPU0_TIR 00000000 00000000 00000000 00000000				TPU0_CFG 00000000 00000000 00000000 00000000			
0xB0408010	TPU0_TIE 00000000 00000000 00000000 00000000				TPU0_TST 00000000 00000000 00000000 00000000			

Table 36. Memory Layout of MEMORY_CONFIG Registers (Continued)

Offset	+7	+6	+5	+4	+3	+2	+1	+0
0xB0408018	read0 00000000 00000000 00000000 00000000				TPU0_MID 00000000 00000000 00000000 00000000			
0xB0408020- B0408028	reserved XXXXXXXX XXXXXXXX XXXXXXXX XXXXXXXX XXXXXXXX XXXXXXXX XXXXXXXX XXXXXXXX							
0xB0408030	TPU0_TCN01 00000000 00000000 00000000 00000000				TPU0_TCN00 00000000 00000000 00000000 00000000			
0xB0408038	TPU0_TCN03 00000000 00000000 00000000 00000000				TPU0_TCN02 00000000 00000000 00000000 00000000			
0xB0408040	TPU0_TCN05 00000000 00000000 00000000 00000000				TPU0_TCN04 00000000 00000000 00000000 00000000			
0xB0408048	TPU0_TCN07 00000000 00000000 00000000 00000000				TPU0_TCN06 00000000 00000000 00000000 00000000			
0xB0408050	TPU0_TCN11 00000000 00000000 00000000 00000000				TPU0_TCN10 00000000 00000000 00000000 00000000			
0xB0408058	TPU0_TCN13 00000000 00000000 00000000 00000000				TPU0_TCN12 00000000 00000000 00000000 00000000			
0xB0408060	TPU0_TCN15 00000000 00000000 00000000 00000000				TPU0_TCN14 00000000 00000000 00000000 00000000			
0xB0408068	TPU0_TCN17 00000000 00000000 00000000 00000000				TPU0_TCN16 00000000 00000000 00000000 00000000			
0xB0408070	TPU0_TCC1 00000000 00000000 00000000 00000000				TPU0_TCC0 00000000 00000000 00000000 00000000			
0xB0408078	TPU0_TCC3 00000000 00000000 00000000 00000000				TPU0_TCC2 00000000 00000000 00000000 00000000			
0xB0408080	TPU0_TCC5 00000000 00000000 00000000 00000000				TPU0_TCC4 00000000 00000000 00000000 00000000			
0xB0408088	TPU0_TCC7 00000000 00000000 00000000 00000000				TPU0_TCC6 00000000 00000000 00000000 00000000			
0xB0408090- B040FFF8	reserved XXXXXXXX XXXXXXXX XXXXXXXX XXXXXXXX XXXXXXXX XXXXXXXX XXXXXXXX XXXXXXXX							
0xB0410000	TRCFG_TCMCFG1 00000000 00000000 00000000 00000000				TRCFG_TCMCFG0 00000011 00000000 00000001 00000000			
0xB0410008	read0 00000000 00000000 00000000 00000000				TRCFG_TCMUNLOCK 00000000 00000000 00000000 00000000			
0xB0410010- B0410FF8	reserved XXXXXXXX XXXXXXXX XXXXXXXX XXXXXXXX XXXXXXXX XXXXXXXX XXXXXXXX XXXXXXXX							
0xB0411000	reserved 00000000 00000000 00000000 00000000				TCFCFG_FCPROTKEY 00000000 00000000 00000000 00000000			
0xB0411008	reserved 00000000 00000000 00000000 00000000				TCFCFG_FCFGR 00000000 00000000 00000000 00000001			
0xB0411010	reserved 00000000 00000000 00000000 00000000				TCFCFG_FECCCTRL 00000000 00000000 00000000 00000000			
0xB0411018	TCFCFG_FECCEIR 00000000 00000000 00000000 00000000				TCFCFG_FDATEIR 00000000 00000000 00000000 00000000			
0xB0411020	TCFCFG_FICTRL1 00000000 00000000 00000000 00000000				TCFCFG_FICTRL0 00000000 00000000 00000000 00000000			
0xB0411028	TCFCFG_FICTRL3 00000000 00000000 00000000 00000000				TCFCFG_FICTRL2 00000000 00000000 00000000 00000000			
0xB0411030	reserved 00000000 00000000 00000000 00000000 00000000 00000000 00000000 00000000							
0xB0411038	TCFCFG_FSTAT1 00000000 00000000 00000000 00000000				TCFCFG_FSTAT0 00000000 00000000 00000000 00000000			
0xB0411040	TCFCFG_FSTAT3 00000000 00000000 00000000 00000000				TCFCFG_FSTAT2 00000000 00000000 00000000 00000000			
0xB0411048	reserved 00000000 00000000 00000000 00000000 00000000 00000000 00000000 00000000							

Table 36. Memory Layout of MEMORY_CONFIG Registers (Continued)

Offset	+7	+6	+5	+4	+3	+2	+1	+0
0xB0411050	TCFCFG_FECCEAR 00000000 00000000 00000000 00000000				TCFCFG_FSECIR 00000000 00000000 00000000 00000000			
0xB0411058	reserved 00000000 00000000 00000000 00000000				TCFCFG_FMIDR 00000000 00000000 00000000 00000000			
0xB0411060	TCFCFG_FCAMHR0 00000000 00000000 000XXXXX XXXXXXXX				TCFCFG_FCAMLR0 XXXXXXXX XXXXXXXX XXXXXXXX XXXXXXXX			
0xB0411068	TCFCFG_FCAMHR1 00000000 00000000 000XXXXX XXXXXXXX				TCFCFG_FCAMLR1 XXXXXXXX XXXXXXXX XXXXXXXX XXXXXXXX			
0xB0411070	TCFCFG_FCAMHR2 00000000 00000000 000XXXXX XXXXXXXX				TCFCFG_FCAMLR2 XXXXXXXX XXXXXXXX XXXXXXXX XXXXXXXX			
0xB0411078	TCFCFG_FCAMHR3 00000000 00000000 000XXXXX XXXXXXXX				TCFCFG_FCAMLR3 XXXXXXXX XXXXXXXX XXXXXXXX XXXXXXXX			
0xB0411080- B0411FF8	reserved XXXXXXXX XXXXXXXX XXXXXXXX XXXXXXXX XXXXXXXX XXXXXXXX XXXXXXXX XXXXXXXX							
0xB0412000	reserved 00000000 00000000 00000000 00000000				EEFCFG_CPR 00000000 00000000 00000000 00000000			
0xB0412008	EEFCFG_ECR 00000000 00000000 00000000 00000000				EEFCFG_CR 00000000 00000000 00000000 00000011			
0xB0412010	EEFCFG_WSR 00000000 00000000 00000000 00000000				EEFCFG_WCR 00000000 00000000 00000000 00000000			
0xB0412018	EEFCFG_EEIR 00000000 00000000 00000000 00000000				EEFCFG_DBEIR 00000000 00000000 00000000 00000000			
0xB0412020	EEFCFG_ICR 00000000 00000000 00000000 00000000				EEFCFG_WMER 00000000 00000000 00000000 00000000			
0xB0412028	EEFCFG_SECIR 00000000 00000000 00000000 00000000				EEFCFG_SR 00000000 00000000 00000000 00000000			
0xB0412030	EEFCFG_MIR 00000000 00000000 00000000 00000000				EEFCFG_EEAR 00000000 00000000 00000000 00000000			
0xB0412038	read0 00000000 00000000 00000000 00000000				EEFCFG_EMENR 00000000 00000000 00000000 00000000			
0xB0412040	reserved XXXXXXXX XXXXXXXX XXXXXXXX XXXXXXXX				reserved XXXXXXXX XXXXXXXX XXXXXXXX XXXXXXXX			
0xB0412048	EEFCFG_FCAMHR 00000000 00000000 000XXXXX XXXXXXXX				EEFCFG_FCAMLR XXXXXXXX XXXXXXXX XXXXXXXX XXXXXXXX			
0xB0412058- B0417FF8	reserved XXXXXXXX XXXXXXXX XXXXXXXX XXXXXXXX XXXXXXXX XXXXXXXX XXXXXXXX XXXXXXXX							
0xB0418000	BSU6_BTST 00000000 00000000 00000000 00000000				reserved XXXXXXXX XXXXXXXX XXXXXXXX XXXXXXXX			
0xB0418008- B0418010	reserved XXXXXXXX XXXXXXXX XXXXXXXX XXXXXXXX XXXXXXXX XXXXXXXX XXXXXXXX XXXXXXXX							
0xB0418018	reserved XXXXXXXX XXXXXXXX XXXXXXXX XXXXXXXX				BSU6_PEN2 00000000 00000000 00000001 00000000			
0xB0418020	reserved XXXXXXXX XXXXXXXX XXXXXXXX XXXXXXXX				BSU6_PEN4 00000000 00000000 00000000 00000001			
0xB0418028- B0418038	reserved XXXXXXXX XXXXXXXX XXXXXXXX XXXXXXXX XXXXXXXX XXXXXXXX XXXXXXXX XXXXXXXX							
0xB0418040	reserved XXXXXXXX XXXXXXXX XXXXXXXX XXXXXXXX				BSU6_PEN12 00000000 00000000 00000000 00000001			
0xB0418048- B0418058	reserved XXXXXXXX XXXXXXXX XXXXXXXX XXXXXXXX XXXXXXXX XXXXXXXX XXXXXXXX XXXXXXXX							
0xB0418060	reserved XXXXXXXX XXXXXXXX XXXXXXXX XXXXXXXX				BSU6_PEN20 00000000 00000000 00000000 00000001			
0xB0418068- B04FFFF8	reserved XXXXXXXX XXXXXXXX XXXXXXXX XXXXXXXX XXXXXXXX XXXXXXXX XXXXXXXX XXXXXXXX							

Table 37. Memory Layout for DEBUG_BUS Registers

Offset	+3	+2	+1	+0
0xB0500000- B050DFFC	reserved XXXXXXXX XXXXXXXX XXXXXXXX XXXXXXXX			
0xB050E000	MCFG_DTAR 000XXX0X 000000XX 00000000 00000000			
0xB050E004	MCFG_TSR 00000000 00000000 00000000 00111011			
0xB050E008- B050F11C	reserved XXXXXXXX XXXXXXXX XXXXXXXX XXXXXXXX			
0xB050F120	SCCFG_TCFPUSRKEY0 00000000 00000000 00000000 00000000			
0xB050F124	SCCFG_TCFPUSRKEY1 00000000 00000000 00000000 00000000			
0xB050F128	SCCFG_TCFPUSRKEY2 00000000 00000000 00000000 00000000			
0xB050F12C	SCCFG_TCFPUSRKEY3 00000000 00000000 00000000 00000000			
0xB050F130	SCCFG_EEFPUSRKEY0 00000000 00000000 00000000 00000000			
0xB050F134	SCCFG_EEFPUSRKEY1 00000000 00000000 00000000 00000000			
0xB050F138	SCCFG_EEFPUSRKEY2 00000000 00000000 00000000 00000000			
0xB050F13C	SCCFG_EEFPUSRKEY3 00000000 00000000 00000000 00000000			
0xB050F140- B050F16C	reserved XXXXXXXX XXXXXXXX XXXXXXXX XXXXXXXX			
0xB050F170	SCCFG_CTRL 00000000 00000000 00000000 00000000			
0xB050F174	reserved XXXXXXXX XXXXXXXX XXXXXXXX XXXXXXXX			
0xB050F178	SCCFG_STAT0 00000000 00000000 00000000 00000000			
0xB050F17C	SCCFG_STAT1 00000001 0000000X 00000000 00111111			
0xB050F180	SCCFG_STAT2 00000000 00000000 00000000 00000101			
0xB050F184- B050F18C	reserved XXXXXXXX XXXXXXXX XXXXXXXX XXXXXXXX			
0xB050F190	SCCFG_SECKEY0 00000000 00000000 00000000 00000000			
0xB050F194	SCCFG_SECKEY1 00000000 00000000 00000000 00000000			
0xB050F198	SCCFG_SECKEY2 00000000 00000000 00000000 00000000			
0xB050F19C	SCCFG_SECKEY3 00000000 00000000 00000000 00000000			
0xB050F1A0	SCCFG_MODID 00000000 00000000 00000000 00000000			

Table 37. Memory Layout for DEBUG_BUS Registers (Continued)

Offset	+3	+2	+1	+0
0xB050F1A4	SCCFG_UNLCK 00000000 00000000 00000000 00000000			
0xB050F1A8	SCCFG_GPREG0 00000000 00000000 00000000 00000000			
0xB050F1AC	SCCFG_GPREG1 00000000 00000000 00000000 00000000			
0xB050F1B0- B05FFFFC	reserved XXXXXXXX XXXXXXXX XXXXXXXX XXXXXXXX			

Table 38. Memory Layout of MCU_CONFIG Registers

Offset	+3	+2	+1	+0
0xB0600000	SYSC_PROTKEYR 00000000 00000000 00000000 00000000			
0xB0600004- B060007C	reserved XXXXXXXX XXXXXXXX XXXXXXXX XXXXXXXX			
0xB0600080	SYSC_RUNCKSRER 00000000 00001110		SYSC_RUNPDCFGR 00000000 00001111	
0xB0600084	SYSC_RUNCKSELR 00100011 00000000 00000000 00000000			
0xB0600088	SYSC_RUNCKER 01110001 00111111 00001101 11110001			
0xB060008C	SYSC_RUNCKDIVR0 00000000 00000000 00000000 00000000			
0xB0600090	SYSC_RUNCKDIVR1 00000000 00000000 00000000 00000000			
0xB0600094	SYSC_RUNCKDIVR2 00000000 00000000 00000000 00000000			
0xB0600098	SYSC_RUNPLLCNTR 00000000 00001101 00000001 00000000			
0xB060009C	SYSC_RUNSSCGCNTR0 00000001 00001101 00000001 00000000			
0xB06000A0	SYSC_RUNSSCGCNTR1 00000000 00000000 00000000 00101001			
0xB06000A4	SYSC_RUNGFXCNTR0 00000001 00001101 00000000 00000000			
0xB06000A8	SYSC_RUNGFXCNTR1 00000000 00000000 00000000 00101001			
0xB06000AC	SYSC_RUNLVDCFGR 00000000 00001011 00001110 00001111			
0xB06000B0	SYSC_TRGRUNCNTR 00000000 00000000		SYSC_RUNCSVCFGR 00000000 00000000	
0xB06000B4- B06000FC	reserved XXXXXXXX XXXXXXXX XXXXXXXX XXXXXXXX			
0xB0600100	SYSC_PSSCKSRER 00000000 00001110		SYSC_PSSPDCFGR 00000000 00001111	
0xB0600104	SYSC_PSSCKSELR 00100011 00000000 00000000 00000000			
0xB0600108	SYSC_PSSCKER 01110001 00111110 00001101 11110001			

Table 38. Memory Layout of MCU_CONFIG Registers (Continued)

Offset	+3	+2	+1	+0
0xB060010C	SYSC_PSSCKDIVR0 00000000 00000000 00000000 00000000			
0xB0600110	SYSC_PSSCKDIVR1 00000000 00000000 00000000 00000000			
0xB0600114	SYSC_PSSCKDIVR2 00000000 00000000 00000000 00000000			
0xB0600118	SYSC_PSSPLLCNTR 00000000 00001101 00000001 00000000			
0xB060011C	SYSC_PSSSSCGCNTR0 00000001 00001101 00000001 00000000			
0xB0600120	SYSC_PSSSSCGCNTR1 00000000 00000000 00000000 00101001			
0xB0600124	SYSC_PSSGFXCNTR0 00000001 00001101 00000000 00000000			
0xB0600128	SYSC_PSSGFXCNTR1 00000000 00000000 00000000 00101001			
0xB060012C	SYSC_PSSLVDCFGR 00000000 00001011 00001110 00001111			
0xB0600130	SYSC_PSSENR 00000000 00000000		SYSC_PSSCSVCFGR 00000000 00000000	
0xB0600134- B060017C	reserved XXXXXXXX XXXXXXXX XXXXXXXX XXXXXXXX			
0xB0600180	SYSC_APPCKSRER 00000000 00001110		SYSC_APPPDCFGR 00000000 00001111	
0xB0600184	SYSC_APPCKSELR 00100011 00000000 00000000 00000000			
0xB0600188	SYSC_APPCKER 01110001 00111111 00001101 11110001			
0xB060018C	SYSC_APPCKDIVR0 00000000 00000000 00000000 00000000			
0xB0600190	SYSC_APPCKDIVR1 00000000 00000000 00000000 00000000			
0xB0600194	SYSC_APPCKDIVR2 00000000 00000000 00000000 00000000			
0xB0600198	SYSC_APPPLLCNTR 00000000 00001101 00000001 00000000			
0xB060019C	SYSC_APPSSCGCNTR0 00000001 00001101 00000001 00000000			
0xB06001A0	SYSC_APPSSCGCNTR1 00000000 00000000 00000000 00101001			
0xB06001A4	SYSC_APPGFXCNTR0 00000001 00001101 00000000 00000000			
0xB06001A8	SYSC_APPGFXCNTR1 00000000 00000000 00000000 00101001			
0xB06001AC	SYSC_APPLVDCFGR 00000000 00001011 00001110 00001111			
0xB06001B0	reserved XXXXXXXX XXXXXXXX		SYSC_APPCSVCFGR 00000000 00000000	
0xB06001B4- B06001FC	reserved XXXXXXXX XXXXXXXX XXXXXXXX XXXXXXXX			
0xB0600200	SYSC_CKSRESTSR 00000000 00001110		SYSC_PDSTSR 00000000 00001111	

Table 38. Memory Layout of MCU_CONFIG Registers (Continued)

Offset	+3	+2	+1	+0
0xB0600204	SYSC_CKSELSTSR 00100011 00000000 00000000 00000000			
0xB0600208	SYSC_CKESTSR 01110001 00111111 00001101 11110001			
0xB060020C	SYSC_CKDIVSTSR0 00000000 00000000 00000000 00000000			
0xB0600210	SYSC_CKDIVSTSR1 00000000 00000000 00000000 00000000			
0xB0600214	SYSC_CKDIVSTSR2 00000000 00000000 00000000 00000000			
0xB0600218	SYSC_PLLSTSR 00000000 00001101 00000001 00000000			
0xB060021C	SYSC_SSCGSTSR0 00000001 00001101 00000001 00000000			
0xB0600220	SYSC_SSCGSTSR1 00000000 00000000 00000000 00101001			
0xB0600224	SYSC_GFXSTSR0 00000001 00001101 00000000 00000000			
0xB0600228	SYSC_GFXSTSR1 00000000 00000000 00000000 00101001			
0xB060022C	SYSC_LVDCFGSTSR 00000000 00101011 00101110 00101111			
0xB0600230	reserved XXXXXXXX XXXXXXXX		SYSC_CSVCFGSTSR 00000000 00000000	
0xB0600234- B060027C	reserved XXXXXXXX XXXXXXXX XXXXXXXX XXXXXXXX			
0xB0600280	SYSC_SYSIDR XXXXXXXX XXXXXXXX XXXXXXXX XXXXXXXX			
0xB0600284	SYSC_SYSSTSR 00000000 00000000 00000100 00000000			
0xB0600288	SYSC_SYSINTER 00000000 00000000 00000000 00000000			
0xB060028C	SYSC_SYSICLR 00000000 00000000 00000000 00000000			
0xB0600290	SYSC_SYSERRR 00000000 00000000 00000000 00000000			
0xB0600294	SYSC_SYSERRICLR 00000000 00000000 00000000 00000000			
0xB0600298- B06002FC	reserved XXXXXXXX XXXXXXXX XXXXXXXX XXXXXXXX			
0xB0600300	SYSC_CSVMOCFGR 00000000 00000000 00000000 00000000			
0xB0600304	SYSC_CSVSOCFGR 00000000 00000000 00000000 00000000			
0xB0600308	SYSC_CSVMPCFGR 00000000 00000000 00000000 00000000			
0xB060030C	SYSC_CSVSPCFGR 00000000 00000000 00000000 00000000			
0xB0600310	SYSC_CSVGPCFGR 00000000 00000000 00000000 00000000			
0xB0600314	SYSC_CSVTESTR 00000000 00000000 00000000 00000000			

Table 38. Memory Layout of MCU_CONFIG Registers (Continued)

Offset	+3	+2	+1	+0
0xB0600318- B060037C	reserved XXXXXXXX XXXXXXXX XXXXXXXX XXXXXXXX			
0xB0600380	SYSC_RSTCNTR 00000000 00000000 00000000 00000000			
0xB0600384	SYSC_RSTCAUSEUR 00011110 00000000 00000000 00000001			
0xB0600388	SYSC_RSTCAUSEBT X0011110 00000000 00000000 00000001			
0xB060038C- B06003FC	reserved XXXXXXXX XXXXXXXX XXXXXXXX XXXXXXXX			
0xB0600400	SYSC_SRCSCTTRG 00000000 00000000 00000000 00000000			
0xB0600404	SYSC_SRCSCTCNTR 00000000 00000000 00000000 00000000			
0xB0600408	SYSC_SRCSCTCPR 00000000 00000110 00000000 00000001			
0xB060040C	SYSC_SRCSCTSTATR 00000000 00000000 00000000 00000000			
0xB0600410	SYSC_SRCSCTINTER 00000000 00000000 00000000 00000000			
0xB0600414	SYSC_SRCSCTICLR 00000000 00000000 00000000 00000000			
0xB0600418- B060047C	reserved XXXXXXXX XXXXXXXX XXXXXXXX XXXXXXXX			
0xB0600480	SYSC_RCSCTTRG 00000000 00000000 00000000 00000000			
0xB0600484	SYSC_RCSCTCNTR 00000000 00000000 00000000 00000000			
0xB0600488	SYSC_RCSCTCPR 00000000 00000110 00000000 00011110			
0xB060048C	SYSC_RCSCTSTATR 00000000 00000000 00000000 00000000			
0xB0600490	SYSC_RCSCTINTER 00000000 00000000 00000000 00000000			
0xB0600494	SYSC_RCSCTICLR 00000000 00000000 00000000 00000000			
0xB0600498- B06004FC	reserved XXXXXXXX XXXXXXXX XXXXXXXX XXXXXXXX			
0xB0600500	SYSC_MAINSCTTRG 00000000 00000000 00000000 00000000			
0xB0600504	SYSC_MAINSCTCNTR 00000000 00000000 00000000 00000000			
0xB0600508	SYSC_MAINSCTCPR 00000000 00000110 00010000 00000000			
0xB060050C	SYSC_MAINSCTSTATR 00000000 00000000 00000000 00000000			
0xB0600510	SYSC_MAINSCTINTER 00000000 00000000 00000000 00000000			
0xB0600514	SYSC_MAINSCTICLR 00000000 00000000 00000000 00000000			
0xB0600518- B060057C	reserved XXXXXXXX XXXXXXXX XXXXXXXX XXXXXXXX			

Table 38. Memory Layout of MCU_CONFIG Registers (Continued)

Offset	+3	+2	+1	+0
0xB0600580	SYSC_SUBSCTTRG 00000000 00000000 00000000 00000000			
0xB0600584	SYSC_SUBSCTCNTR 00000000 00000000 00000000 00000000			
0xB0600588	SYSC_SUBSCTCPR 00000000 00000110 00000100 00000000			
0xB060058C	SYSC_SUBSCTSTATR 00000000 00000000 00000000 00000000			
0xB0600590	SYSC_SUBSCTINTER 00000000 00000000 00000000 00000000			
0xB0600594	SYSC_SUBSCTICLR 00000000 00000000 00000000 00000000			
0xB0600598- B06005FC	reserved XXXXXXXX XXXXXXXX XXXXXXXX XXXXXXXX			
0xB0600600	SYSC_CKOTCFGR 00000000 00000000 00000000 00000111			
0xB0600604- B060067C	reserved XXXXXXXX XXXXXXXX XXXXXXXX XXXXXXXX			
0xB0600680	SYSC_SPCCFGR 00000000 000000X0 00000000 00000000			
0xB0600684	SYSC_RCCFGR 00000000 00000000 00000001 11111111			
0xB0600688	SYSC_TESTR0 00000000 00000000 00000000 00000000			
0xB060068C	SYSC_TESTR1 00000000 00000000 00000000 00000000			
0xB0600690	SYSC_TESTR2 00000000 00000000 00000000 00000000			
0xB0600694- B06006FC	reserved XXXXXXXX XXXXXXXX XXXXXXXX XXXXXXXX			
0xB0600700	SYSC_JTAGDETECT 00000000 00000000 00000000 00000000			
0xB0600704	SYSC_JTAGCNFG 00000000 00000000 00000000 00000001			
0xB0600708	SYSC_JTAGWAKEUP 00000000 00000000 00000000 00000001			
0xB060070C- B0607FFC	reserved XXXXXXXX XXXXXXXX XXXXXXXX XXXXXXXX			
0xB0608000	WDG_PROT 00000000 00000000 00000000 00000000			
0xB0608004	reserved 00000000 00000000 00000000 00000000			
0xB0608008	WDG_CNT 00000000 00000000 00000000 00000000			
0xB060800C	WDG_RSTCAUSE 00000000 00000000 00000000 000XXXXX			
0xB0608010	WDG_TRG0 00000000 00000000 00000000 00000000			
0xB0608014	reserved 00000000 00000000 00000000 00000000			
0xB0608018	WDG_TRG1 00000000 00000000 00000000 00000000			

Table 38. Memory Layout of MCU_CONFIG Registers (Continued)

Offset	+3	+2	+1	+0
0xB060801C	reserved 00000000 00000000 00000000 00000000			
0xB0608020	WDG_INT 00000000 00000000 00000000 00000000			
0xB0608024	WDG_INTCLR 00000000 00000000 00000000 00000000			
0xB0608028	reserved 00000000 00000000 00000000 00000000			
0xB060802C	WDG_TRG0CFG 00000000 00000000 00000000 00000000			
0xB0608030	WDG_TRG1CFG 00000000 00000000 00000000 00000000			
0xB0608034	WDG_RUNLL 00000000 00000000 00000000 00000000			
0xB0608038	WDG_RUNUL 00000001 00000000 00000000 00000000			
0xB060803C	WDG_PSSLL 00000000 00000000 00000000 00000000			
0xB0608040	WDG_PSSUL 10000000 00000000 00000000 00000000			
0xB0608044	WDG_RSTDLY 00000000 00000000 00000000 00000000			
0xB0608048	WDG_CFG 00000000 00000000 00000000 00000011			
0xB060804C- B060FFFC	reserved XXXXXXXX XXXXXXXX XXXXXXXX XXXXXXXX			
0xB0610000	RRCFG_UNLOCKR 00000000 00000000 00000000 00000000			
0xB0610004	RRCFG_CSR 00001111 00000000 00000010 00000000			
0xB0610008	RRCFG_EAN 00000000 00000000 00000000 00000000			
0xB061000C	RRCFG_ERRMSKR0 00000000 00000000 00000000 00000000			
0xB0610010	RRCFG_ERRMSKR1 00000000 00000000 00000000 00000000			
0xB0610014	RRCFG_ECCEN 00000000 00000000 00000000 00000001			
0xB0610018- B0617FFC	reserved XXXXXXXX XXXXXXXX XXXXXXXX XXXXXXXX			
0xB0618000	RTC_WTCR 00000000 00000000 00000000 00000000			
0xB0618004	RTC_WTSR 00000000 00000000 00000000 00000000			
0xB0618008	RTC_WINS 00000000 00000000 00000000 00000000			
0xB061800C	RTC_WINE 00000000 00000000 00000000 00000000			
0xB0618010	RTC_WINC 00000000 00000000 00000000 00000000			
0xB0618014	RTC_WTBR 00000000 00000000 00000000 00000000			

Table 38. Memory Layout of MCU_CONFIG Registers (Continued)

Offset	+3	+2	+1	+0
0xB0618018	RTC_WRT 00000000 00000000 00000000 00000000			
0xB061801C	RTC_CNTCAL 00000000 00000000 00000000 00000000			
0xB0618020	RTC_CNTPCAL 00000000 00000000 00000000 00000000			
0xB0618024	RTC_DURMW 00000000 00000000 00000000 00000000			
0xB0618028	RTC_CALTRG 00000000 00000000 00000000 00000000			
0xB061802C	RTC_DEBUG 00000000 00000000 00000000 00000000			
0xB0618030- B061FFFC	reserved XXXXXXXX XXXXXXXX XXXXXXXX XXXXXXXX			
0xB0620000	EIC0_ENIR 00000000 00000000 00000000 00000000			
0xB0620004	EIC0_ENISR 00000000 00000000 00000000 00000000			
0xB0620008	EIC0_ENICR 00000000 00000000 00000000 00000000			
0xB062000C	EIC0_EIRR XXXXXXXX XXXXXXXX XXXXXXXX XXXXXXXX			
0xB0620010	EIC0_EIRCR 00000000 00000000 00000000 00000000			
0xB0620014	EIC0_NFER 00000000 00000000 00000000 00000000			
0xB0620018	EIC0_NFESR 00000000 00000000 00000000 00000000			
0xB062001C	EIC0_NFECR 00000000 00000000 00000000 00000000			
0xB0620020	EIC0_ELVR0 00000000 00000000 00000000 00000000			
0xB0620024	EIC0_ELVR1 00000000 00000000 00000000 00000000			
0xB0620028	EIC0_ELVR2 00000000 00000000 00000000 00000000			
0xB062002C	EIC0_ELVR3 00000000 00000000 00000000 00000000			
0xB0620030	EIC0_NMIR 00000000 00000000 00000000 00000000			
0xB0620034	EIC0_DRER 00000000 00000000 00000000 00000000			
0xB0620038	EIC0_DRESR 00000000 00000000 00000000 00000000			
0xB062003C	EIC0_DRECR 00000000 00000000 00000000 00000000			
0xB0620040	EIC0_DRFR 00000000 00000000 00000000 00000000			
0xB0620044- B0627FFC	reserved 00000000 00000000 00000000 0000000X			
0xB0628000	EICU0_CNFGR 00000000 00000000 00000000 00000000			

Table 38. Memory Layout of MCU_CONFIG Registers (Continued)

Offset	+3	+2	+1	+0
0xB0628004	EICU0_IRENR 00000000 00000000 00000000 00000000			
0xB0628008	EICU0_SPLR0 00000000 00000000 00000000 00000000			
0xB062800C	EICU0_SPLR1 00000000 00000000 00000000 00000000			
0xB0628010	EICU0_SPLR2 00000000 00000000 00000000 00000000			
0xB0628014	EICU0_SPLR3 00000000 00000000 00000000 00000000			
0xB0628018	EICU0_SPLR4 00000000 00000000 00000000 00000000			
0xB062801C	EICU0_SPLR5 00000000 00000000 00000000 00000000			
0xB0628020	EICU0_SPLR6 00000000 00000000 00000000 00000000			
0xB0628024	EICU0_SPLR7 00000000 00000000 00000000 00000000			
0xB0628028- B06F8FFC	reserved XXXXXXXX XXXXXXXX XXXXXXXX XXXXXXXX			
0xB06F9000	read0 00000000 00000000		RICFG7_EIC0INT00 00000000 00000000	
0xB06F9004	read0 00000000 00000000		RICFG7_EIC0INT01 00000000 00000000	
0xB06F9008	read0 00000000 00000000		RICFG7_EIC0INT02 00000000 00000000	
0xB06F900C	read0 00000000 00000000		RICFG7_EIC0INT03 00000000 00000000	
0xB06F9010	read0 00000000 00000000		RICFG7_EIC0INT04 00000000 00000000	
0xB06F9014	read0 00000000 00000000		RICFG7_EIC0INT05 00000000 00000000	
0xB06F9018	read0 00000000 00000000		RICFG7_EIC0INT06 00000000 00000000	
0xB06F901C	read0 00000000 00000000		RICFG7_EIC0INT07 00000000 00000000	
0xB06F9020	read0 00000000 00000000		RICFG7_EIC0INT08 00000000 00000000	
0xB06F9024	read0 00000000 00000000		RICFG7_EIC0INT09 00000000 00000000	
0xB06F9028	read0 00000000 00000000		RICFG7_EIC0INT10 00000000 00000000	
0xB06F902C	read0 00000000 00000000		RICFG7_EIC0INT11 00000000 00000000	
0xB06F9030	read0 00000000 00000000		RICFG7_EIC0INT12 00000000 00000000	
0xB06F9034	read0 00000000 00000000		RICFG7_EIC0INT13 00000000 00000000	
0xB06F9038	read0 00000000 00000000		RICFG7_EIC0INT14 00000000 00000000	

Table 38. Memory Layout of MCU_CONFIG Registers (Continued)

Offset	+3	+2	+1	+0
0xB06F903C	read0 00000000 00000000		RICFG7_EIC0INT15 00000000 00000000	
0xB06F9040	read0 00000000 00000000		RICFG7_EIC0INT16 00000000 00000000	
0xB06F9044	read0 00000000 00000000		RICFG7_EIC0INT17 00000000 00000000	
0xB06F9048	read0 00000000 00000000		RICFG7_EIC0INT18 00000000 00000000	
0xB06F904C	read0 00000000 00000000		RICFG7_EIC0INT19 00000000 00000000	
0xB06F9050	read0 00000000 00000000		RICFG7_EIC0INT20 00000000 00000000	
0xB06F9054	read0 00000000 00000000		RICFG7_EIC0INT21 00000000 00000000	
0xB06F9058	read0 00000000 00000000		RICFG7_EIC0INT22 00000000 00000000	
0xB06F905C	read0 00000000 00000000		RICFG7_EIC0INT23 00000000 00000000	
0xB06F9060	read0 00000000 00000000		RICFG7_EIC0INT24 00000000 00000000	
0xB06F9064	read0 00000000 00000000		RICFG7_EIC0INT25 00000000 00000000	
0xB06F9068	read0 00000000 00000000		RICFG7_EIC0INT26 00000000 00000000	
0xB06F906C	read0 00000000 00000000		RICFG7_EIC0INT27 00000000 00000000	
0xB06F9070	read0 00000000 00000000		RICFG7_EIC0INT28 00000000 00000000	
0xB06F9074	read0 00000000 00000000		RICFG7_EIC0INT29 00000000 00000000	
0xB06F9078	read0 00000000 00000000		RICFG7_EIC0INT30 00000000 00000000	
0xB06F907C	read0 00000000 00000000		RICFG7_EIC0INT31 00000000 00000000	
0xB06F9080	read0 00000000 00000000		RICFG7_EIC0NMI 00000000 00000000	
0xB06F9084- B06FFC00	reserved XXXXXXXX XXXXXXXX XXXXXXXX XXXXXXXX			
0xB06FFC04	BSU7_BTST 00000000 00000000 00000000 00000000			
0xB06FFC08- B06FFC18	reserved XXXXXXXX XXXXXXXX XXXXXXXX XXXXXXXX			
0xB06FFC1C	BSU7_PEN3 00000000 00000000 00000000 00000000			
0xB06FFC20	reserved XXXXXXXX XXXXXXXX XXXXXXXX XXXXXXXX			
0xB06FFC24	BSU7_PEN5 00000000 00000000 00000000 00000000			
0xB06FFC28	reserved XXXXXXXX XXXXXXXX XXXXXXXX XXXXXXXX			

Table 38. Memory Layout of MCU_CONFIG Registers (Continued)

Offset	+3	+2	+1	+0
0xB06FFC2C	BSU7_PEN7 00000000 00000000 00000000 00000000			
0xB06FFC30	BSU7_PEN8 00000000 00000000 00000000 00000000			
0xB06FFC34- B06FFFFC	reserved XXXXXXXX XXXXXXXX XXXXXXXX XXXXXXXX			

Table 39. Memory Layout for the PERI0_RBUS Registers

Offset	+1	+0
0xB0700000	ADC0_ER32 00000000 00000000	
0xB0700002	ADC0_ER10 00000000 00000000	
0xB0700004	ADC0_CS1 00000000	ADC0_CS0 00000000
0xB0700006	ADC0_CS3 00000000	ADC0_CS2 00000000
0xB0700008	ADC0_CSS1 00000000	reserved XXXXXXXX
0xB070000A	ADC0_CSC1 00000000	reserved XXXXXXXX
0xB070000C	ADC0_CSS3 00000000	reserved XXXXXXXX
0xB070000E	ADC0_CSC3 00000000	reserved XXXXXXXX
0xB0700010	ADC0_CR 000000XX XXXXXXXX	
0xB0700012	reserved XXXXXXXX	reserved XXXXXXXX
0xB0700014	reserved XXXXXXXX	reserved XXXXXXXX
0xB0700016	reserved XXXXXXXX	reserved XXXXXXXX
0xB0700018	ADC0_CD0 000000XX XXXXXXXX	
0xB070001A	ADC0_CD1 000000XX XXXXXXXX	
0xB070001C	ADC0_CD2 000000XX XXXXXXXX	
0xB070001E	ADC0_CD3 000000XX XXXXXXXX	
0xB0700020	ADC0_CD4 000000XX XXXXXXXX	
0xB0700022	ADC0_CD5 000000XX XXXXXXXX	
0xB0700024	ADC0_CD6 000000XX XXXXXXXX	
0xB0700026	ADC0_CD7 000000XX XXXXXXXX	

Table 39. Memory Layout for the PERI0_RBUS Registers (Continued)

Offset	+1	+0
0xB0700028	ADC0_CD8 000000XX XXXXXXXX	
0xB070002A	ADC0_CD9 000000XX XXXXXXXX	
0xB070002C	ADC0_CD10 000000XX XXXXXXXX	
0xB070002E	ADC0_CD11 000000XX XXXXXXXX	
0xB0700030	ADC0_CD12 000000XX XXXXXXXX	
0xB0700032	ADC0_CD13 000000XX XXXXXXXX	
0xB0700034	ADC0_CD14 000000XX XXXXXXXX	
0xB0700036	ADC0_CD15 000000XX XXXXXXXX	
0xB0700038	ADC0_CD16 000000XX XXXXXXXX	
0xB070003A	ADC0_CD17 000000XX XXXXXXXX	
0xB070003C	ADC0_CD18 000000XX XXXXXXXX	
0xB070003E	ADC0_CD19 000000XX XXXXXXXX	
0xB0700040	ADC0_CD20 000000XX XXXXXXXX	
0xB0700042	ADC0_CD21 000000XX XXXXXXXX	
0xB0700044	ADC0_CD22 000000XX XXXXXXXX	
0xB0700046	ADC0_CD23 000000XX XXXXXXXX	
0xB0700048	ADC0_CD24 000000XX XXXXXXXX	
0xB070004A	ADC0_CD25 000000XX XXXXXXXX	
0xB070004C	ADC0_CD26 000000XX XXXXXXXX	
0xB070004E	ADC0_CD27 000000XX XXXXXXXX	
0xB0700050	ADC0_CD28 000000XX XXXXXXXX	
0xB0700052	ADC0_CD29 000000XX XXXXXXXX	
0xB0700054	ADC0_CD30 000000XX XXXXXXXX	
0xB0700056	ADC0_CD31 000000XX XXXXXXXX	
0xB0700058	reserved XXXXXXXX	reserved XXXXXXXX
0xB070005A	reserved XXXXXXXX	reserved XXXXXXXX

Table 39. Memory Layout for the PERI0_RBUS Registers (Continued)

Offset	+1	+0
0xB070005C	reserved XXXXXXXX	reserved XXXXXXXX
0xB070005E	ADC0_CT 00010000 00101100	
0xB0700060	ADC0_ECH 00000000	ADC0_SCH 00000000
0xB0700062	reserved XXXXXXXX	ADC0_MAR 00000000
0xB0700064	reserved XXXXXXXX	ADC0_MACR 00000000
0xB0700066	reserved XXXXXXXX	ADC0_MASR 00000000
0xB0700068	ADC0_RCOH0 11111111	ADC0_RCOL0 00000000
0xB070006A	ADC0_RCOH1 11111111	ADC0_RCOL1 00000000
0xB070006C	ADC0_RCOH2 11111111	ADC0_RCOL2 00000000
0xB070006E	ADC0_RCOH3 11111111	ADC0_RCOL3 00000000
0xB0700070	ADC0_CC1 00000000	ADC0_CC0 00000000
0xB0700072	ADC0_CC3 00000000	ADC0_CC2 00000000
0xB0700074	ADC0_CC5 00000000	ADC0_CC4 00000000
0xB0700076	ADC0_CC7 00000000	ADC0_CC6 00000000
0xB0700078	ADC0_CC9 00000000	ADC0_CC8 00000000
0xB070007A	ADC0_CC11 00000000	ADC0_CC10 00000000
0xB070007C	ADC0_CC13 00000000	ADC0_CC12 00000000
0xB070007E	ADC0_CC15 00000000	ADC0_CC14 00000000
0xB0700080	ADC0_RCOIRS32 00000000 00000000	
0xB0700082	ADC0_RCOIRS10 00000000 00000000	
0xB0700084	ADC0_RCOOF32 00000000 00000000	
0xB0700086	ADC0_RCOOF10 00000000 00000000	
0xB0700088	ADC0_RCOINT32 00000000 00000000	
0xB070008A	ADC0_RCOINT10 00000000 00000000	
0xB070008C	ADC0_RCOINTC32 00000000 00000000	

Table 39. Memory Layout for the PERI0_RBUS Registers (Continued)

Offset	+1	+0
0xB070008E	ADC0_RCOINTC10 00000000 00000000	
0xB0700090	ADC0_PCTNRL0 00000000	ADC0_PCTPRL0 00000000
0xB0700092	ADC0_PCTNCT0 00000000	ADC0_PCTPCT0 00000000
0xB0700094	ADC0_PCTNRL1 00000000	ADC0_PCTPRL1 00000000
0xB0700096	ADC0_PCTNCT1 00000000	ADC0_PCTPCT1 00000000
0xB0700098	ADC0_PCTNRL2 00000000	ADC0_PCTPRL2 00000000
0xB070009A	ADC0_PCTNCT2 00000000	ADC0_PCTPCT2 00000000
0xB070009C	ADC0_PCTNRL3 00000000	ADC0_PCTPRL3 00000000
0xB070009E	ADC0_PCTNCT3 00000000	ADC0_PCTPCT3 00000000
0xB07000A0	ADC0_PCTNRL4 00000000	ADC0_PCTPRL4 00000000
0xB07000A2	ADC0_PCTNCT4 00000000	ADC0_PCTPCT4 00000000
0xB07000A4	ADC0_PCTNRL5 00000000	ADC0_PCTPRL5 00000000
0xB07000A6	ADC0_PCTNCT5 00000000	ADC0_PCTPCT5 00000000
0xB07000A8	ADC0_PCTNRL6 00000000	ADC0_PCTPRL6 00000000
0xB07000AA	ADC0_PCTNCT6 00000000	ADC0_PCTPCT6 00000000
0xB07000AC	ADC0_PCTNRL7 00000000	ADC0_PCTPRL7 00000000
0xB07000AE	ADC0_PCTNCT7 00000000	ADC0_PCTPCT7 00000000
0xB07000B0	ADC0_PCTNRL8 00000000	ADC0_PCTPRL8 00000000
0xB07000B2	ADC0_PCTNCT8 00000000	ADC0_PCTPCT8 00000000
0xB07000B4	ADC0_PCTNRL9 00000000	ADC0_PCTPRL9 00000000
0xB07000B6	ADC0_PCTNCT9 00000000	ADC0_PCTPCT9 00000000
0xB07000B8	ADC0_PCTNRL10 00000000	ADC0_PCTPRL10 00000000
0xB07000BA	ADC0_PCTNCT10 00000000	ADC0_PCTPCT10 00000000
0xB07000BC	ADC0_PCTNRL11 00000000	ADC0_PCTPRL11 00000000
0xB07000BE	ADC0_PCTNCT11 00000000	ADC0_PCTPCT11 00000000

Table 39. Memory Layout for the PERI0_RBUS Registers (Continued)

Offset	+1	+0
0xB07000C0	ADC0_PCTNRL12 00000000	ADC0_PCTPRL12 00000000
0xB07000C2	ADC0_PCTNCT12 00000000	ADC0_PCTPCT12 00000000
0xB07000C4	ADC0_PCTNRL13 00000000	ADC0_PCTPRL13 00000000
0xB07000C6	ADC0_PCTNCT13 00000000	ADC0_PCTPCT13 00000000
0xB07000C8	ADC0_PCTNRL14 00000000	ADC0_PCTPRL14 00000000
0xB07000CA	ADC0_PCTNCT14 00000000	ADC0_PCTPCT14 00000000
0xB07000CC	ADC0_PCTNRL15 00000000	ADC0_PCTPRL15 00000000
0xB07000CE	ADC0_PCTNCT15 00000000	ADC0_PCTPCT15 00000000
0xB07000D0	ADC0_PCTNRL16 00000000	ADC0_PCTPRL16 00000000
0xB07000D2	ADC0_PCTNCT16 00000000	ADC0_PCTPCT16 00000000
0xB07000D4	ADC0_PCTNRL17 00000000	ADC0_PCTPRL17 00000000
0xB07000D6	ADC0_PCTNCT17 00000000	ADC0_PCTPCT17 00000000
0xB07000D8	ADC0_PCTNRL18 00000000	ADC0_PCTPRL18 00000000
0xB07000DA	ADC0_PCTNCT18 00000000	ADC0_PCTPCT18 00000000
0xB07000DC	ADC0_PCTNRL19 00000000	ADC0_PCTPRL19 00000000
0xB07000DE	ADC0_PCTNCT19 00000000	ADC0_PCTPCT19 00000000
0xB07000E0	ADC0_PCTNRL20 00000000	ADC0_PCTPRL20 00000000
0xB07000E2	ADC0_PCTNCT20 00000000	ADC0_PCTPCT20 00000000
0xB07000E4	ADC0_PCTNRL21 00000000	ADC0_PCTPRL21 00000000
0xB07000E6	ADC0_PCTNCT21 00000000	ADC0_PCTPCT21 00000000
0xB07000E8	ADC0_PCTNRL22 00000000	ADC0_PCTPRL22 00000000
0xB07000EA	ADC0_PCTNCT22 00000000	ADC0_PCTPCT22 00000000
0xB07000EC	ADC0_PCTNRL23 00000000	ADC0_PCTPRL23 00000000
0xB07000EE	ADC0_PCTNCT23 00000000	ADC0_PCTPCT23 00000000
0xB07000F0	ADC0_PCTNRL24 00000000	ADC0_PCTPRL24 00000000

Table 39. Memory Layout for the PERI0_RBUS Registers (Continued)

Offset	+1	+0
0xB07000F2	ADC0_PCTNCT24 00000000	ADC0_PCTPCT24 00000000
0xB07000F4	ADC0_PCTNRL25 00000000	ADC0_PCTPRL25 00000000
0xB07000F6	ADC0_PCTNCT25 00000000	ADC0_PCTPCT25 00000000
0xB07000F8	ADC0_PCTNRL26 00000000	ADC0_PCTPRL26 00000000
0xB07000FA	ADC0_PCTNCT26 00000000	ADC0_PCTPCT26 00000000
0xB07000FC	ADC0_PCTNRL27 00000000	ADC0_PCTPRL27 00000000
0xB07000FE	ADC0_PCTNCT27 00000000	ADC0_PCTPCT27 00000000
0xB0700100	ADC0_PCTNRL28 00000000	ADC0_PCTPRL28 00000000
0xB0700102	ADC0_PCTNCT28 00000000	ADC0_PCTPCT28 00000000
0xB0700104	ADC0_PCTNRL29 00000000	ADC0_PCTPRL29 00000000
0xB0700106	ADC0_PCTNCT29 00000000	ADC0_PCTPCT29 00000000
0xB0700108	ADC0_PCTNRL30 00000000	ADC0_PCTPRL30 00000000
0xB070010A	ADC0_PCTNCT30 00000000	ADC0_PCTPCT30 00000000
0xB070010C	ADC0_PCTNRL31 00000000	ADC0_PCTPRL31 00000000
0xB070010E	ADC0_PCTNCT31 00000000	ADC0_PCTPCT31 00000000
0xB0700110	ADC0_PCZF10 00000000 00000000	
0xB0700112	ADC0_PCZF32 00000000 00000000	
0xB0700114	ADC0_PCZFC10 00000000 00000000	
0xB0700116	ADC0_PCZFC32 00000000 00000000	
0xB0700118	ADC0_PCIE10 00000000 00000000	
0xB070011A	ADC0_PCIE32 00000000 00000000	
0xB070011C	ADC0_PCIES10 00000000 00000000	
0xB070011E	ADC0_PCIES32 00000000 00000000	
0xB0700120	ADC0_PCIEC10 00000000 00000000	
0xB0700122	ADC0_PCIEC32 00000000 00000000	

Table 39. Memory Layout for the PERI0_RBUS Registers (Continued)

Offset	+1	+0
0xB0700124- B0707FFE	reserved XXXXXXXX XXXXXXXX	
0xB0708000	FRT0_TCDT 00000000 00000000	
0xB0708002	FRT0_CPCLRB 11111111 11111111	
0xB0708004	FRT0_CPCLR 11111111 11111111	
0xB0708006	FRT0_TCCS 00000000 00000000	
0xB0708008	FRT0_TSTPTCLK 01000000 00000000	
0xB070800A	FRT0_ETCCS 00000000 00000000	
0xB070800C	FRT0_CIMSZIMS 00000000 00000000	
0xB070800E	reserved XXXXXXXX	FRT0_DMACFG 00000000
0xB0708010- B07083FE	reserved XXXXXXXX XXXXXXXX	
0xB0708400	FRT1_TCDT 00000000 00000000	
0xB0708402	FRT1_CPCLRB 11111111 11111111	
0xB0708404	FRT1_CPCLR 11111111 11111111	
0xB0708406	FRT1_TCCS 00000000 00000000	
0xB0708408	FRT1_TSTPTCLK 01000000 00000000	
0xB070840A	FRT1_ETCCS 00000000 00000000	
0xB070840C	FRT1_CIMSZIMS 00000000 00000000	
0xB070840E	reserved XXXXXXXX	FRT1_DMACFG 00000000
0xB0708410- B07087FE	reserved XXXXXXXX XXXXXXXX	
0xB0708800	FRT2_TCDT 00000000 00000000	
0xB0708802	FRT2_CPCLRB 11111111 11111111	
0xB0708804	FRT2_CPCLR 11111111 11111111	
0xB0708806	FRT2_TCCS 00000000 00000000	
0xB0708808	FRT2_TSTPTCLK 01000000 00000000	
0xB070880A	FRT2_ETCCS 00000000 00000000	
0xB070880C	FRT2_CIMSZIMS 00000000 00000000	

Table 39. Memory Layout for the PERI0_RBUS Registers (Continued)

Offset	+1	+0
0xB070880E	reserved XXXXXXXX	FRT2_DMACFG 00000000
0xB0708810- B0708BFE	reserved XXXXXXXX XXXXXXXX	
0xB0708C00	FRT3_TCDT 00000000 00000000	
0xB0708C02	FRT3_CPCLRB 11111111 11111111	
0xB0708C04	FRT3_CPCLR 11111111 11111111	
0xB0708C06	FRT3_TCCS 00000000 00000000	
0xB0708C08	FRT3_TSTPTCLK 01000000 00000000	
0xB0708C0A	FRT3_ETCCS 00000000 00000000	
0xB0708C0C	FRT3_CIMSZIMS 00000000 00000000	
0xB0708C0E	reserved XXXXXXXX	FRT3_DMACFG 00000000
0xB0708C10- B07107FE	reserved XXXXXXXX XXXXXXXX	
0xB0710800	ICU2_IPC0 00000000 00000000	
0xB0710802	ICU2_IPC1 00000000 00000000	
0xB0710804	ICU2_ICC01 00000000 00000000	
0xB0710806	ICU2_ICEICS01 00000000 00000000	
0xB0710808	ICU2_DEBUG01 00000000	ICU2_DMACFG01 00000000
0xB071080A- B0710BFE	reserved XXXXXXXX XXXXXXXX	
0xB0710C00	ICU3_IPC0 00000000 00000000	
0xB0710C02	ICU3_IPC1 00000000 00000000	
0xB0710C04	ICU3_ICC01 00000000 00000000	
0xB0710C06	ICU3_ICEICS01 00000000 00000000	
0xB0710C08	ICU3_DEBUG01 00000000	ICU3_DMACFG01 00000000
0xB0710C0A- B0717FFE	reserved XXXXXXXX XXXXXXXX	
0xB0718000	OCU0_OCCP0 00000000 00000000	
0xB0718002	OCU0_OCCP1 00000000 00000000	
0xB0718004	OCU0_OCCPB0 00000000 00000000	

Table 39. Memory Layout for the PERI0_RBUS Registers (Continued)

Offset	+1	+0
0xB0718006	OCU0_OCCPB1 00000000 00000000	
0xB0718008	OCU0_OCCPBD0 00000000 00000000	
0xB071800A	OCU0_OCCPBD1 00000000 00000000	
0xB071800C	OCU0_OCS01 00000000 00000000	
0xB071800E	OCU0_OCSC01 00000000 00000000	
0xB0718010	OCU0_OCSS01 00000000 00000000	
0xB0718012	reserved XXXXXXXX	OCU0_OSR01 00000000
0xB0718014	reserved XXXXXXXX	OCU0_OSCR01 00000000
0xB0718016	OCU0_EOCS01 00000000 00000000	
0xB0718018	OCU0_EOCSSH01 00000000	reserved XXXXXXXX
0xB071801A	OCU0_EOCSCH01 00000000	reserved XXXXXXXX
0xB071801C	OCU0_DEBUG01 00000000	OCU0_DMACFG01 00000000
0xB071801E	OCU0_OCMCR01 00000000	reserved XXXXXXXX
0xB0718020- B07183FE	reserved XXXXXXXX XXXXXXXX	
0xB0718400	OCU1_OCCP0 00000000 00000000	
0xB0718402	OCU1_OCCP1 00000000 00000000	
0xB0718404	OCU1_OCCPB0 00000000 00000000	
0xB0718406	OCU1_OCCPB1 00000000 00000000	
0xB0718408	OCU1_OCCPBD0 00000000 00000000	
0xB071840A	OCU1_OCCPBD1 00000000 00000000	
0xB071840C	OCU1_OCS01 00000000 00000000	
0xB071840E	OCU1_OCSC01 00000000 00000000	
0xB0718410	OCU1_OCSS01 00000000 00000000	
0xB0718412	reserved XXXXXXXX	OCU1_OSR01 00000000
0xB0718414	reserved XXXXXXXX	OCU1_OSCR01 00000000
0xB0718416	OCU1_EOCS01 00000000 00000000	

Table 39. Memory Layout for the PERI0_RBUS Registers (Continued)

Offset	+1	+0
0xB0718418	OCU1_EOCSSH01 00000000	reserved XXXXXXXX
0xB071841A	OCU1_EOCSCH01 00000000	reserved XXXXXXXX
0xB071841C	OCU1_DEBUG01 00000000	OCU1_DMACFG01 00000000
0xB071841E	OCU1_OCMCR01 00000000	reserved XXXXXXXX
0xB0718420- B071FFFE	reserved XXXXXXXX XXXXXXXX	
0xB0720000	I2C0_IBCSR 00000000 00000000	
0xB0720002	I2C0_ITBA 00000000 00000000	
0xB0720004	I2C0_ITMK 00XXXX11 11111111	
0xB0720006	I2C0_ISBMA 01111111 00000000	
0xB0720008	reserved XXXXXXXX	I2C0_IODAR 00000000
0xB072000A	reserved XXXXXXXX	I2C0_ICCR 00111111
0xB072000C	I2C0_ICDIDAR 00000000 00000000	
0xB072000E	I2C0_IEICR 00000000 00000000	
0xB0720010	I2C0_DDMACFG 00000000 00000000	
0xB0720012	reserved XXXXXXXX	I2C0_IEIER 00000000
0xB0720014- B0727FFE	reserved XXXXXXXX XXXXXXXX	
0xB0728000	USART0_SCR 00000000	USART0_SMR 00000000
0xB0728002	USART0_SCSR 00000000	USART0_SMSR 00000000
0xB0728004	USART0_SCCR 00000000	reserved XXXXXXXX
0xB0728006	USART0_SSR 00001000	USART0_TDR 00000000
0xB0728008	USART0_SSSR 00000000	USART0_RDR 00000000
0xB072800A	USART0_SSCR 00000000	reserved XXXXXXXX
0xB072800C	USART0_ESCR 00000100	USART0_ECCR 000000XX
0xB072800E	USART0_ESCSR 00000000	USART0_ECCSR 00000000
0xB0728010	USART0_ESCCR 00000000	USART0_ECCCR 00000000

Table 39. Memory Layout for the PERI0_RBUS Registers (Continued)

Offset	+1	+0
0xB0728012	USART0_EIER 00000000	USART0_ESIR 000010X0
0xB0728014	USART0_EIESR 00000000	USART0_ESISR 00000000
0xB0728016	USART0_EIECR 00000000	USART0_ESICR 00000000
0xB0728018	USART0_EFERH 00000000	USART0_EFERL 00000000
0xB072801A	USART0_TFCR 00000000	USART0_RFCR 00000000
0xB072801C	USART0_TFCSR 00000000	USART0_RFCSR 00000000
0xB072801E	USART0_TFCCR 00000000	USART0_RFCCR 00000000
0xB0728020	USART0_TFSR 00000000	USART0_RFSR 00000000
0xB0728022	USART0_ESR 00000000	USART0_CSCR 00000000
0xB0728024	reserved XXXXXXXX	USART0_CSCSR 00000000
0xB0728026	USART0_ESCLR 00000000	USART0_CSCCR 00000000
0xB0728028	USART0_BGRLM 00000000	USART0_BGRLL 00000000
0xB072802A	reserved XXXXXXXX	USART0_BGRLH 00000000
0xB072802C	USART0_BGRM 00000000	USART0_BGRL 00000000
0xB072802E	reserved XXXXXXXX	USART0_BGRH 00000000
0xB0728030	USART0_SRXDR 00000000	USART0_STXDR 00000000
0xB0728032	USART0_SRXDSR 00000000	USART0_STXDSR 00000000
0xB0728034	USART0_SRXDCR 00000000	USART0_STXDCR 00000000
0xB0728036	read0 00000000	read0 00000000
0xB0728038	reserved XXXXXXXX	read0 00000000
0xB072803A	reserved XXXXXXXX	USART0_FIDR 00000000
0xB072803C	reserved XXXXXXXX	USART0_DEBUG 00000000
0xB072803E- B072FFFE	reserved XXXXXXXX XXXXXXXX	
0xB0730000	reserved XXXXXXXX	SMC0_PWC 00000000
0xB0730002	reserved XXXXXXXX	SMC0_PWCS 00000000

Table 39. Memory Layout for the PERI0_RBUS Registers (Continued)

Offset	+1	+0
0xB0730004	reserved XXXXXXXX	SMC0_PWCC 00000000
0xB0730006	SMC0_PWC1 000000XX XXXXXXXX	
0xB0730008	SMC0_PWC2 000000XX XXXXXXXX	
0xB073000A	SMC0_PWS 00000000 00000000	
0xB073000C	SMC0_PWSS 00000000 XXXXXXXX	
0xB073000E	reserved XXXXXXXX	SMC0_PTRGDL 00000000
0xB0730010	reserved XXXXXXXX	SMC0_DEBUG 00000000
0xB0730012- B07303FE	reserved XXXXXXXX XXXXXXXX	
0xB0730400	reserved XXXXXXXX	SMC1_PWC 00000000
0xB0730402	reserved XXXXXXXX	SMC1_PWCS 00000000
0xB0730404	reserved XXXXXXXX	SMC1_PWCC 00000000
0xB0730406	SMC1_PWC1 000000XX XXXXXXXX	
0xB0730408	SMC1_PWC2 000000XX XXXXXXXX	
0xB073040A	SMC1_PWS 00000000 00000000	
0xB073040C	SMC1_PWSS 00000000 XXXXXXXX	
0xB073040E	reserved XXXXXXXX	SMC1_PTRGDL 00000000
0xB0730410	reserved XXXXXXXX	SMC1_DEBUG 00000000
0xB0730412- B07307FE	reserved XXXXXXXX XXXXXXXX	
0xB0730800	reserved XXXXXXXX	SMC2_PWC 00000000
0xB0730802	reserved XXXXXXXX	SMC2_PWCS 00000000
0xB0730804	reserved XXXXXXXX	SMC2_PWCC 00000000
0xB0730806	SMC2_PWC1 000000XX XXXXXXXX	
0xB0730808	SMC2_PWC2 000000XX XXXXXXXX	
0xB073080A	SMC2_PWS 00000000 00000000	
0xB073080C	SMC2_PWSS 00000000 XXXXXXXX	
0xB073080E	reserved XXXXXXXX	SMC2_PTRGDL 00000000

Table 39. Memory Layout for the PERI0_RBUS Registers (Continued)

Offset	+1	+0
0xB0730810	reserved XXXXXXXX	SMC2_DEBUG 00000000
0xB0730812- B0730BFE	reserved XXXXXXXX XXXXXXXX	
0xB0730C00	reserved XXXXXXXX	SMC3_PWC 00000000
0xB0730C02	reserved XXXXXXXX	SMC3_PWCS 00000000
0xB0730C04	reserved XXXXXXXX	SMC3_PWCC 00000000
0xB0730C06	SMC3_PWC1 000000XX XXXXXXXX	
0xB0730C08	SMC3_PWC2 000000XX XXXXXXXX	
0xB0730C0A	SMC3_PWS 00000000 00000000	
0xB0730C0C	SMC3_PWSS 00000000 XXXXXXXX	
0xB0730C0E	reserved XXXXXXXX	SMC3_PTRGDL 00000000
0xB0730C10	reserved XXXXXXXX	SMC3_DEBUG 00000000
0xB0730C12- B0730FFE	reserved XXXXXXXX XXXXXXXX	
0xB0731000	reserved XXXXXXXX	SMC4_PWC 00000000
0xB0731002	reserved XXXXXXXX	SMC4_PWCS 00000000
0xB0731004	reserved XXXXXXXX	SMC4_PWCC 00000000
0xB0731006	SMC4_PWC1 000000XX XXXXXXXX	
0xB0731008	SMC4_PWC2 000000XX XXXXXXXX	
0xB073100A	SMC4_PWS 00000000 00000000	
0xB073100C	SMC4_PWSS 00000000 XXXXXXXX	
0xB073100E	reserved XXXXXXXX	SMC4_PTRGDL 00000000
0xB0731010	reserved XXXXXXXX	SMC4_DEBUG 00000000
0xB0731012- B07313FE	reserved XXXXXXXX XXXXXXXX	
0xB0731400	reserved XXXXXXXX	SMC5_PWC 00000000
0xB0731402	reserved XXXXXXXX	SMC5_PWCS 00000000
0xB0731404	reserved XXXXXXXX	SMC5_PWCC 00000000

Table 39. Memory Layout for the PERI0_RBUS Registers (Continued)

Offset	+1	+0
0xB0731406	SMC5_PWC1 000000XX XXXXXXXX	
0xB0731408	SMC5_PWC2 000000XX XXXXXXXX	
0xB073140A	SMC5_PWS 00000000 00000000	
0xB073140C	SMC5_PWSS 00000000 XXXXXXXX	
0xB073140E	reserved XXXXXXXX	SMC5_PTRGDL 00000000
0xB0731410	reserved XXXXXXXX	SMC5_DEBUG 00000000
0xB0731412- B07317FE	reserved XXXXXXXX XXXXXXXX	
0xB0731800	SMCTG0_PTRGS 00000000 00000000	
0xB0731802	reserved XXXXXXXX	SMCTG0_PTRG 00000000
0xB0731804- B0737FFE	reserved XXXXXXXX XXXXXXXX	
0xB0738000	PPG0_PCN 00000000 00000000	
0xB0738002	PPG0_SWTRIG 00000000	PPG0_IRQCLR 00000000
0xB0738004	PPG0_CNTEN 00000000	PPG0_OE 00000000
0xB0738006	PPG0_RMPCFG 00000000	PPG0_OPTMSK 00000000
0xB0738008	PPG0_TRIGCLR 00000000	PPG0_STRD 00000000
0xB073800A	PPG0_EPCN1 00000000 00000000	
0xB073800C	PPG0_EPCN2 00000000 00000000	
0xB073800E	PPG0_GCN3 00000000	PPG0_GCN1 00000000
0xB0738010	PPG0_GCN5 00000000	PPG0_GCN4 00000110
0xB0738012	PPG0_PCSR XXXXXXXX XXXXXXXX	
0xB0738014	PPG0_PDUT XXXXXXXX XXXXXXXX	
0xB0738016	PPG0_PTMR 11111111 11111111	
0xB0738018	PPG0_PSDR 00000000 00000000	
0xB073801A	PPG0_PTPC 00000000 00000000	
0xB073801C	PPG0_PEDR 00000000 00000000	
0xB073801E	PPG0_DEBUG 00000000	PPG0_DMACFG 00000000

Table 39. Memory Layout for the PERI0_RBUS Registers (Continued)

Offset	+1	+0
0xB0738020- B07383FE	reserved XXXXXXXX XXXXXXXX	
0xB0738400	PPG1_PCN 00000000 00000000	
0xB0738402	PPG1_SWTRIG 00000000	PPG1_IRQCLR 00000000
0xB0738404	PPG1_CNTEN 00000000	PPG1_OE 00000000
0xB0738406	PPG1_RMPCFG 00000000	PPG1_OPTMSK 00000000
0xB0738408	PPG1_TRIGCLR 00000000	PPG1_STRD 00000000
0xB073840A	PPG1_EPCN1 00000000 00000000	
0xB073840C	PPG1_EPCN2 00000000 00000000	
0xB073840E	PPG1_GCN3 00000000	PPG1_GCN1 00000000
0xB0738410	PPG1_GCN5 00000000	PPG1_GCN4 00000110
0xB0738412	PPG1_PCSR XXXXXXXX XXXXXXXX	
0xB0738414	PPG1_PDUT XXXXXXXX XXXXXXXX	
0xB0738416	PPG1_PTMR 11111111 11111111	
0xB0738418	PPG1_PSDR 00000000 00000000	
0xB073841A	PPG1_PTPC 00000000 00000000	
0xB073841C	PPG1_PEDR 00000000 00000000	
0xB073841E	PPG1_DEBUG 00000000	PPG1_DMACFG 00000000
0xB0738420- B07387FE	reserved XXXXXXXX XXXXXXXX	
0xB0738800	PPG2_PCN 00000000 00000000	
0xB0738802	PPG2_SWTRIG 00000000	PPG2_IRQCLR 00000000
0xB0738804	PPG2_CNTEN 00000000	PPG2_OE 00000000
0xB0738806	PPG2_RMPCFG 00000000	PPG2_OPTMSK 00000000
0xB0738808	PPG2_TRIGCLR 00000000	PPG2_STRD 00000000
0xB073880A	PPG2_EPCN1 00000000 00000000	
0xB073880C	PPG2_EPCN2 00000000 00000000	
0xB073880E	PPG2_GCN3 00000000	PPG2_GCN1 00000000

Table 39. Memory Layout for the PERI0_RBUS Registers (Continued)

Offset	+1	+0
0xB0738810	PPG2_GCN5 00000000	PPG2_GCN4 00000110
0xB0738812	PPG2_PCSR XXXXXXXX XXXXXXXX	
0xB0738814	PPG2_PDUT XXXXXXXX XXXXXXXX	
0xB0738816	PPG2_PTMR 11111111 11111111	
0xB0738818	PPG2_PSDR 00000000 00000000	
0xB073881A	PPG2_PTPC 00000000 00000000	
0xB073881C	PPG2_PEDR 00000000 00000000	
0xB073881E	PPG2_DEBUG 00000000	PPG2_DMACFG 00000000
0xB0738820- B0738BFE	reserved XXXXXXXX XXXXXXXX	
0xB0738C00	PPG3_PCN 00000000 00000000	
0xB0738C02	PPG3_SWTRIG 00000000	PPG3_IRQCLR 00000000
0xB0738C04	PPG3_CNTEN 00000000	PPG3_OE 00000000
0xB0738C06	PPG3_RMPCFG 00000000	PPG3_OPTMSK 00000000
0xB0738C08	PPG3_TRIGCLR 00000000	PPG3_STRD 00000000
0xB0738C0A	PPG3_EPCN1 00000000 00000000	
0xB0738C0C	PPG3_EPCN2 00000000 00000000	
0xB0738C0E	PPG3_GCN3 00000000	PPG3_GCN1 00000000
0xB0738C10	PPG3_GCN5 00000000	PPG3_GCN4 00000110
0xB0738C12	PPG3_PCSR XXXXXXXX XXXXXXXX	
0xB0738C14	PPG3_PDUT XXXXXXXX XXXXXXXX	
0xB0738C16	PPG3_PTMR 11111111 11111111	
0xB0738C18	PPG3_PSDR 00000000 00000000	
0xB0738C1A	PPG3_PTPC 00000000 00000000	
0xB0738C1C	PPG3_PEDR 00000000 00000000	
0xB0738C1E	PPG3_DEBUG 00000000	PPG3_DMACFG 00000000
0xB0738C20- B0738FFE	reserved XXXXXXXX XXXXXXXX	

Table 39. Memory Layout for the PERI0_RBUS Registers (Continued)

Offset	+1	+0
0xB0739000	PPG4_PCN 00000000 00000000	
0xB0739002	PPG4_SWTRIG 00000000	PPG4_IRQCLR 00000000
0xB0739004	PPG4_CNTEN 00000000	PPG4_OE 00000000
0xB0739006	PPG4_RMPCFG 00000000	PPG4_OPTMSK 00000000
0xB0739008	PPG4_TRIGCLR 00000000	PPG4_STRD 00000000
0xB073900A	PPG4_EPCN1 00000000 00000000	
0xB073900C	PPG4_EPCN2 00000000 00000000	
0xB073900E	PPG4_GCN3 00000000	PPG4_GCN1 00000000
0xB0739010	PPG4_GCN5 00000000	PPG4_GCN4 00000110
0xB0739012	PPG4_PCSR XXXXXXXX XXXXXXXX	
0xB0739014	PPG4_PDUT XXXXXXXX XXXXXXXX	
0xB0739016	PPG4_PTMR 11111111 11111111	
0xB0739018	PPG4_PSDR 00000000 00000000	
0xB073901A	PPG4_PTPC 00000000 00000000	
0xB073901C	PPG4_PEDR 00000000 00000000	
0xB073901E	PPG4_DEBUG 00000000	PPG4_DMACFG 00000000
0xB0739020- B07393FE	reserved XXXXXXXX XXXXXXXX	
0xB0739400	PPG5_PCN 00000000 00000000	
0xB0739402	PPG5_SWTRIG 00000000	PPG5_IRQCLR 00000000
0xB0739404	PPG5_CNTEN 00000000	PPG5_OE 00000000
0xB0739406	PPG5_RMPCFG 00000000	PPG5_OPTMSK 00000000
0xB0739408	PPG5_TRIGCLR 00000000	PPG5_STRD 00000000
0xB073940A	PPG5_EPCN1 00000000 00000000	
0xB073940C	PPG5_EPCN2 00000000 00000000	
0xB073940E	PPG5_GCN3 00000000	PPG5_GCN1 00000000

Table 39. Memory Layout for the PERI0_RBUS Registers (Continued)

Offset	+1	+0
0xB0739410	PPG5_GCN5 00000000	PPG5_GCN4 00000110
0xB0739412	PPG5_PCSR XXXXXXXX XXXXXXXX	
0xB0739414	PPG5_PDUT XXXXXXXX XXXXXXXX	
0xB0739416	PPG5_PTMR 11111111 11111111	
0xB0739418	PPG5_PSDR 00000000 00000000	
0xB073941A	PPG5_PTPC 00000000 00000000	
0xB073941C	PPG5_PEDR 00000000 00000000	
0xB073941E	PPG5_DEBUG 00000000	PPG5_DMACFG 00000000
0xB0739420- B07397FE	reserved XXXXXXXX XXXXXXXX	
0xB0739800	PPG6_PCN 00000000 00000000	
0xB0739802	PPG6_SWTRIG 00000000	PPG6_IRQCLR 00000000
0xB0739804	PPG6_CNTEN 00000000	PPG6_OE 00000000
0xB0739806	PPG6_RMPCFG 00000000	PPG6_OPTMSK 00000000
0xB0739808	PPG6_TRIGCLR 00000000	PPG6_STRD 00000000
0xB073980A	PPG6_EPCN1 00000000 00000000	
0xB073980C	PPG6_EPCN2 00000000 00000000	
0xB073980E	PPG6_GCN3 00000000	PPG6_GCN1 00000000
0xB0739810	PPG6_GCN5 00000000	PPG6_GCN4 00000110
0xB0739812	PPG6_PCSR XXXXXXXX XXXXXXXX	
0xB0739814	PPG6_PDUT XXXXXXXX XXXXXXXX	
0xB0739816	PPG6_PTMR 11111111 11111111	
0xB0739818	PPG6_PSDR 00000000 00000000	
0xB073981A	PPG6_PTPC 00000000 00000000	
0xB073981C	PPG6_PEDR 00000000 00000000	
0xB073981E	PPG6_DEBUG 00000000	PPG6_DMACFG 00000000
0xB0739820- B0739BFE	reserved XXXXXXXX XXXXXXXX	

Table 39. Memory Layout for the PERI0_RBUS Registers (Continued)

Offset	+1	+0
0xB0739C00	PPG7_PCN 00000000 00000000	
0xB0739C02	PPG7_SWTRIG 00000000	PPG7_IRQCLR 00000000
0xB0739C04	PPG7_CNTEN 00000000	PPG7_OE 00000000
0xB0739C06	PPG7_RMPCFG 00000000	PPG7_OPTMSK 00000000
0xB0739C08	PPG7_TRIGCLR 00000000	PPG7_STRD 00000000
0xB0739C0A	PPG7_EPCN1 00000000 00000000	
0xB0739C0C	PPG7_EPCN2 00000000 00000000	
0xB0739C0E	PPG7_GCN3 00000000	PPG7_GCN1 00000000
0xB0739C10	PPG7_GCN5 00000000	PPG7_GCN4 00000110
0xB0739C12	PPG7_PCSR XXXXXXXX XXXXXXXX	
0xB0739C14	PPG7_PDUT XXXXXXXX XXXXXXXX	
0xB0739C16	PPG7_PTMR 11111111 11111111	
0xB0739C18	PPG7_PSDR 00000000 00000000	
0xB0739C1A	PPG7_PTPC 00000000 00000000	
0xB0739C1C	PPG7_PEDR 00000000 00000000	
0xB0739C1E	PPG7_DEBUG 00000000	PPG7_DMACFG 00000000
0xB0739C20- B0739FFE	reserved XXXXXXXX XXXXXXXX	
0xB073A000	PPG8_PCN 00000000 00000000	
0xB073A002	PPG8_SWTRIG 00000000	PPG8_IRQCLR 00000000
0xB073A004	PPG8_CNTEN 00000000	PPG8_OE 00000000
0xB073A006	PPG8_RMPCFG 00000000	PPG8_OPTMSK 00000000
0xB073A008	PPG8_TRIGCLR 00000000	PPG8_STRD 00000000
0xB073A00A	PPG8_EPCN1 00000000 00000000	
0xB073A00C	PPG8_EPCN2 00000000 00000000	
0xB073A00E	PPG8_GCN3 00000000	PPG8_GCN1 00000000

Table 39. Memory Layout for the PERI0_RBUS Registers (Continued)

Offset	+1	+0
0xB073A010	PPG8_GCN5 00000000	PPG8_GCN4 00000110
0xB073A012	PPG8_PCSR XXXXXXXX XXXXXXXX	
0xB073A014	PPG8_PDUT XXXXXXXX XXXXXXXX	
0xB073A016	PPG8_PTMR 11111111 11111111	
0xB073A018	PPG8_PSDR 00000000 00000000	
0xB073A01A	PPG8_PTPC 00000000 00000000	
0xB073A01C	PPG8_PEDR 00000000 00000000	
0xB073A01E	PPG8_DEBUG 00000000	PPG8_DMACFG 00000000
0xB073A020- B073A3FE	reserved XXXXXXXX XXXXXXXX	
0xB073A400	PPG9_PCN 00000000 00000000	
0xB073A402	PPG9_SWTRIG 00000000	PPG9_IRQCLR 00000000
0xB073A404	PPG9_CNTEN 00000000	PPG9_OE 00000000
0xB073A406	PPG9_RMPCFG 00000000	PPG9_OPTMSK 00000000
0xB073A408	PPG9_TRIGCLR 00000000	PPG9_STRD 00000000
0xB073A40A	PPG9_EPCN1 00000000 00000000	
0xB073A40C	PPG9_EPCN2 00000000 00000000	
0xB073A40E	PPG9_GCN3 00000000	PPG9_GCN1 00000000
0xB073A410	PPG9_GCN5 00000000	PPG9_GCN4 00000110
0xB073A412	PPG9_PCSR XXXXXXXX XXXXXXXX	
0xB073A414	PPG9_PDUT XXXXXXXX XXXXXXXX	
0xB073A416	PPG9_PTMR 11111111 11111111	
0xB073A418	PPG9_PSDR 00000000 00000000	
0xB073A41A	PPG9_PTPC 00000000 00000000	
0xB073A41C	PPG9_PEDR 00000000 00000000	
0xB073A41E	PPG9_DEBUG 00000000	PPG9_DMACFG 00000000
0xB073A420- B073A7FE	reserved XXXXXXXX XXXXXXXX	

Table 39. Memory Layout for the PERI0_RBUS Registers (Continued)

Offset	+1	+0
0xB073A800	PPG10_PCN 00000000 00000000	
0xB073A802	PPG10_SWTRIG 00000000	PPG10_IRQCLR 00000000
0xB073A804	PPG10_CNTEN 00000000	PPG10_OE 00000000
0xB073A806	PPG10_RMPCFG 00000000	PPG10_OPTMSK 00000000
0xB073A808	PPG10_TRIGCLR 00000000	PPG10_STRD 00000000
0xB073A80A	PPG10_EPCN1 00000000 00000000	
0xB073A80C	PPG10_EPCN2 00000000 00000000	
0xB073A80E	PPG10_GCN3 00000000	PPG10_GCN1 00000000
0xB073A810	PPG10_GCN5 00000000	PPG10_GCN4 00000110
0xB073A812	PPG10_PCSR XXXXXXXX XXXXXXXX	
0xB073A814	PPG10_PDUT XXXXXXXX XXXXXXXX	
0xB073A816	PPG10_PTMR 11111111 11111111	
0xB073A818	PPG10_PSDR 00000000 00000000	
0xB073A81A	PPG10_PTPC 00000000 00000000	
0xB073A81C	PPG10_PEDR 00000000 00000000	
0xB073A81E	PPG10_DEBUG 00000000	PPG10_DMACFG 00000000
0xB073A820- B073ABFE	reserved XXXXXXXX XXXXXXXX	
0xB073AC00	PPG11_PCN 00000000 00000000	
0xB073AC02	PPG11_SWTRIG 00000000	PPG11_IRQCLR 00000000
0xB073AC04	PPG11_CNTEN 00000000	PPG11_OE 00000000
0xB073AC06	PPG11_RMPCFG 00000000	PPG11_OPTMSK 00000000
0xB073AC08	PPG11_TRIGCLR 00000000	PPG11_STRD 00000000
0xB073AC0A	PPG11_EPCN1 00000000 00000000	
0xB073AC0C	PPG11_EPCN2 00000000 00000000	
0xB073AC0E	PPG11_GCN3 00000000	PPG11_GCN1 00000000

Table 39. Memory Layout for the PERI0_RBUS Registers (Continued)

Offset	+1	+0
0xB073AC10	PPG11_GCN5 00000000	PPG11_GCN4 00000110
0xB073AC12	PPG11_PCSR XXXXXXXX XXXXXXXX	
0xB073AC14	PPG11_PDUT XXXXXXXX XXXXXXXX	
0xB073AC16	PPG11_PTMR 11111111 11111111	
0xB073AC18	PPG11_PSDR 00000000 00000000	
0xB073AC1A	PPG11_PTPC 00000000 00000000	
0xB073AC1C	PPG11_PEDR 00000000 00000000	
0xB073AC1E	PPG11_DEBUG 00000000	PPG11_DMACFG 00000000
0xB073AC20- B073AFFE	reserved XXXXXXXX XXXXXXXX	
0xB073B000	PPG12_PCN 00000000 00000000	
0xB073B002	PPG12_SWTRIG 00000000	PPG12_IRQCLR 00000000
0xB073B004	PPG12_CNTEN 00000000	PPG12_OE 00000000
0xB073B006	PPG12_RMPCFG 00000000	PPG12_OPTMSK 00000000
0xB073B008	PPG12_TRIGCLR 00000000	PPG12_STRD 00000000
0xB073B00A	PPG12_EPCN1 00000000 00000000	
0xB073B00C	PPG12_EPCN2 00000000 00000000	
0xB073B00E	PPG12_GCN3 00000000	PPG12_GCN1 00000000
0xB073B010	PPG12_GCN5 00000000	PPG12_GCN4 00000110
0xB073B012	PPG12_PCSR XXXXXXXX XXXXXXXX	
0xB073B014	PPG12_PDUT XXXXXXXX XXXXXXXX	
0xB073B016	PPG12_PTMR 11111111 11111111	
0xB073B018	PPG12_PSDR 00000000 00000000	
0xB073B01A	PPG12_PTPC 00000000 00000000	
0xB073B01C	PPG12_PEDR 00000000 00000000	
0xB073B01E	PPG12_DEBUG 00000000	PPG12_DMACFG 00000000
0xB073B020- B073B3FE	reserved XXXXXXXX XXXXXXXX	

Table 39. Memory Layout for the PERI0_RBUS Registers (Continued)

Offset	+1	+0
0xB073B400	PPG13_PCN 00000000 00000000	
0xB073B402	PPG13_SWTRIG 00000000	PPG13_IRQCLR 00000000
0xB073B404	PPG13_CNTEN 00000000	PPG13_OE 00000000
0xB073B406	PPG13_RMPCFG 00000000	PPG13_OPTMSK 00000000
0xB073B408	PPG13_TRIGCLR 00000000	PPG13_STRD 00000000
0xB073B40A	PPG13_EPCN1 00000000 00000000	
0xB073B40C	PPG13_EPCN2 00000000 00000000	
0xB073B40E	PPG13_GCN3 00000000	PPG13_GCN1 00000000
0xB073B410	PPG13_GCN5 00000000	PPG13_GCN4 00000110
0xB073B412	PPG13_PCSR XXXXXXXX XXXXXXXX	
0xB073B414	PPG13_PDUT XXXXXXXX XXXXXXXX	
0xB073B416	PPG13_PTMR 11111111 11111111	
0xB073B418	PPG13_PSDR 00000000 00000000	
0xB073B41A	PPG13_PTPC 00000000 00000000	
0xB073B41C	PPG13_PEDR 00000000 00000000	
0xB073B41E	PPG13_DEBUG 00000000	PPG13_DMACFG 00000000
0xB073B420- B073B7FE	reserved XXXXXXXX XXXXXXXX	
0xB073B800	PPG14_PCN 00000000 00000000	
0xB073B802	PPG14_SWTRIG 00000000	PPG14_IRQCLR 00000000
0xB073B804	PPG14_CNTEN 00000000	PPG14_OE 00000000
0xB073B806	PPG14_RMPCFG 00000000	PPG14_OPTMSK 00000000
0xB073B808	PPG14_TRIGCLR 00000000	PPG14_STRD 00000000
0xB073B80A	PPG14_EPCN1 00000000 00000000	
0xB073B80C	PPG14_EPCN2 00000000 00000000	
0xB073B80E	PPG14_GCN3 00000000	PPG14_GCN1 00000000

Table 39. Memory Layout for the PERI0_RBUS Registers (Continued)

Offset	+1	+0
0xB073B810	PPG14_GCN5 00000000	PPG14_GCN4 00000110
0xB073B812	PPG14_PCSR XXXXXXXX XXXXXXXX	
0xB073B814	PPG14_PDUT XXXXXXXX XXXXXXXX	
0xB073B816	PPG14_PTMR 11111111 11111111	
0xB073B818	PPG14_PSDR 00000000 00000000	
0xB073B81A	PPG14_PTPC 00000000 00000000	
0xB073B81C	PPG14_PEDR 00000000 00000000	
0xB073B81E	PPG14_DEBUG 00000000	PPG14_DMACFG 00000000
0xB073B820- B073BBFE	reserved XXXXXXXX XXXXXXXX	
0xB073BC00	PPG15_PCN 00000000 00000000	
0xB073BC02	PPG15_SWTRIG 00000000	PPG15_IRQCLR 00000000
0xB073BC04	PPG15_CNTEN 00000000	PPG15_OE 00000000
0xB073BC06	PPG15_RMPCFG 00000000	PPG15_OPTMSK 00000000
0xB073BC08	PPG15_TRIGCLR 00000000	PPG15_STRD 00000000
0xB073BC0A	PPG15_EPCN1 00000000 00000000	
0xB073BC0C	PPG15_EPCN2 00000000 00000000	
0xB073BC0E	PPG15_GCN3 00000000	PPG15_GCN1 00000000
0xB073BC10	PPG15_GCN5 00000000	PPG15_GCN4 00000110
0xB073BC12	PPG15_PCSR XXXXXXXX XXXXXXXX	
0xB073BC14	PPG15_PDUT XXXXXXXX XXXXXXXX	
0xB073BC16	PPG15_PTMR 11111111 11111111	
0xB073BC18	PPG15_PSDR 00000000 00000000	
0xB073BC1A	PPG15_PTPC 00000000 00000000	
0xB073BC1C	PPG15_PEDR 00000000 00000000	
0xB073BC1E	PPG15_DEBUG 00000000	PPG15_DMACFG 00000000
0xB073BC20- B0747FFE	reserved XXXXXXXX XXXXXXXX	

Table 39. Memory Layout for the PERI0_RBUS Registers (Continued)

Offset	+1	+0
0xB0748000	reserved XXXXXXXX	PPGGRP0_GCTRL 00000000
0xB0748002- B07483FE	reserved XXXXXXXX XXXXXXXX	
0xB0748400	reserved XXXXXXXX	PPGGRP1_GCTRL 00000000
0xB0748402- B07487FE	reserved XXXXXXXX XXXXXXXX	
0xB0748800	reserved XXXXXXXX	PPGGRP2_GCTRL 00000000
0xB0748802- B0748BFE	reserved XXXXXXXX XXXXXXXX	
0xB0748C00	reserved XXXXXXXX	PPGGRP3_GCTRL 00000000
0xB0748C02- B074BFFE	reserved XXXXXXXX XXXXXXXX	
0xB074C000	reserved XXXXXXXX	PPGGLC0_GCNR 00000000
0xB074C002- B07E804E	reserved XXXXXXXX XXXXXXXX	
0xB07E8050	PPC_PCFGR040 0XX00100 00000000	
0xB07E8052	PPC_PCFGR041 0XX00100 00000000	
0xB07E8054	PPC_PCFGR042 0XX00100 00000000	
0xB07E8056	PPC_PCFGR043 0XX00100 00000000	
0xB07E8058	PPC_PCFGR044 0XX00100 00000000	
0xB07E805A	PPC_PCFGR045 0XX00100 00000000	
0xB07E805C	PPC_PCFGR046 0XX00100 00000000	
0xB07E805E	PPC_PCFGR047 0XX00100 00000000	
0xB07E8060	PPC_PCFGR048 0XX00100 00000000	
0xB07E8062	PPC_PCFGR049 0XX00100 00000000	
0xB07E8064	PPC_PCFGR050 0XX00100 00000000	
0xB07E8066	PPC_PCFGR051 0XX00100 00000000	
0xB07E8068 - 0xB07E807A	reserved XXXXXXXX XXXXXXXX	
0xB07E807C	PPC_PCFGR062 0XX00100 00000000	
0xB07E807E	PPC_PCFGR063 0XX00100 00000000	
0xB07E8080	PPC_PCFGR100 0XX00100 00000000	

Table 39. Memory Layout for the PERI0_RBUS Registers (Continued)

Offset	+1	+0
0xB07E8082	PPC_PCFGR101 0XX00100 00000000	
0xB07E8084	PPC_PCFGR102 0XX00100 00000000	
0xB07E8086	PPC_PCFGR103 0XX00100 00000000	
0xB07E8088	PPC_PCFGR104 0XX00100 00000000	
0xB07E808A	PPC_PCFGR105 0XX00100 00000000	
0xB07E808C	PPC_PCFGR106 0XX00100 00000000	
0xB07E808E	PPC_PCFGR107 0XX00100 00000000	
0xB07E8090	PPC_PCFGR108 0XX0100 00000000	
0xB07E8092	PPC_PCFGR109 0XX00100 00000000	
0xB07E8094	PPC_PCFGR110 0XX00100 00000000	
0xB07E8096	PPC_PCFGR111 0XX00100 00000000	
0xB07E8098	PPC_PCFGR112 0XX00100 00000000	
0xB07E809A	PPC_PCFGR113 0XX00100 00000000	
0xB07E809C	PPC_PCFGR114 0XX00100 00000000	
0xB07E809E	PPC_PCFGR115 0XX00100 00000000	
0xB07E80A0	PPC_PCFGR116 0XX00100 00000000	
0xB07E80A2	PPC_PCFGR117 0XX00100 00000000	
0xB07E80A4	PPC_PCFGR118 0XX00100 00000000	
0xB07E80A6	PPC_PCFGR119 0XX00100 00000000	
0xB07E80A8	PPC_PCFGR120 0XX00100 00000000	
0xB07E80AA	PPC_PCFGR121 0XX00100 00000000	
0xB07E80AC	PPC_PCFGR122 0XX00100 00000000	
0xB07E80AE	PPC_PCFGR123 0XX00100 00000000	
0xB07E80B0	PPC_PCFGR124 0XX00000 00000000	
0xB07E80B2	PPC_PCFGR125 0XX00000 00000000	
0xB07E80B4	PPC_PCFGR126 0XX00000 00000000	

Table 39. Memory Layout for the PERI0_RBUS Registers (Continued)

Offset	+1	+0
0xB07E80B6	PPC_PCFGR127 0XX00000 00000000	
0xB07E80B8	PPC_PCFGR128 0XX00000 00000000	
0xB07E80BA	PPC_PCFGR129 0XX00000 00000000	
0xB07E80BC	PPC_PCFGR130 0XX00000 00000000	
0xB07E80BE	PPC_PCFGR131 0XX00000 00000000	
0xB07E80C0	PPC_PCFGR132 0XX00000 00000000	
0xB07E80C2	PPC_PCFGR133 0XX00000 00000000	
0xB07E80C4	PPC_PCFGR134 0XX00000 00000000	
0xB07E80C6	PPC_PCFGR135 0XX00000 00000000	
0xB07E80C8	PPC_PCFGR136 0XX00000 00000000	
0xB07E80CA	PPC_PCFGR137 0XX00000 00000000	
0xB07E80CC	PPC_PCFGR138 0XX00000 00000000	
0xB07E80CE - 0xB07E813E	reserved XXXXXXXX XXXXXXXX	
0xB07E8140	PPC_PCFGR232 0XX00000 00000000	
0xB07E8142	PPC_PCFGR233 0XX00000 00000000	
0xB07E8144	PPC_PCFGR234 0XX00000 00000000	
0xB07E8146	PPC_PCFGR235 0XX00000 00000000	
0xB07E8148	PPC_PCFGR236 0XX00000 00000000	
0xB07E814A	PPC_PCFGR237 0XX00000 00000000	
0xB07E814C	PPC_PCFGR238 0XX00000 00000000	
0xB07E814E	PPC_PCFGR239 0XX00000 00000000	
0xB07E8150	PPC_PCFGR240 0XX00000 00000000	
0xB07E8152	PPC_PCFGR241 0XX00000 00000000	
0xB07E8154	PPC_PCFGR242 0XX00000 00000000	
0xB07E8156	PPC_PCFGR243 0XX00000 00000000	
0xB07E8158	PPC_PCFGR244 0XX00000 00000000	

Table 39. Memory Layout for the PERI0_RBUS Registers (Continued)

Offset	+1	+0
0xB07E815A	PPC_PCFGR245 0XX00000 00000000	
0xB07E815C	PPC_PCFGR246 0XX00000 00000000	
0xB07E815E	PPC_PCFGR247 0XX00000 00000000	
0xB07E8160 - 0xB07E817E	reserved XXXXXXXX XXXXXXXX	
0xB07E8180	PPC_PCFGR300 0XX00000 00000000	
0xB07E8182	PPC_PCFGR301 0XX00000 00000000	
0xB07E8184	PPC_PCFGR302 0XX00000 00000000	
0xB07E8186	PPC_PCFGR303 0XX00000 00000000	
0xB07E8188	PPC_PCFGR304 0XX00000 00000000	
0xB07E818A	PPC_PCFGR305 0XX00000 00000000	
0xB07E818C	PPC_PCFGR306 0XX00000 00000000	
0xB07E818E	PPC_PCFGR307 0XX00000 00000000	
0xB07E8190	PPC_PCFGR308 0XX00000 00000000	
0xB07E8192	PPC_PCFGR309 0XX00000 00000000	
0xB07E8194	PPC_PCFGR310 0XX00000 00000000	
0xB07E8196	PPC_PCFGR311 0XX00000 00000000	
0xB07E8198	PPC_PCFGR312 0XX00000 00000000	
0xB07E819A	PPC_PCFGR313 0XX00000 00000000	
0xB07E819C	PPC_PCFGR314 0XX00000 00000000	
0xB07E819E	PPC_PCFGR315 0XX00000 00000000	
0xB07E81A0	PPC_PCFGR316 0XX00000 00000000	
0xB07E81A2	PPC_PCFGR317 0XX00000 00000000	
0xB07E81A4	PPC_PCFGR318 0XX00000 00000000	
0xB07E81A6	PPC_PCFGR319 0XX00000 00000000	
0xB07E81A8	PPC_PCFGR320 0XX00000 00000000	
0xB07E81AA	PPC_PCFGR321 0XX00000 00000000	

Table 39. Memory Layout for the PERI0_RBUS Registers (Continued)

Offset	+1	+0
0xB07E81AC	PPC_PCFGR322 0XX00000 00000000	
0xB07E81AE	PPC_PCFGR323 0XX00000 00000000	
0xB07E81B0	PPC_PCFGR324 0XX00000 00000000	
0xB07E81B2	PPC_PCFGR325 0XX00000 00000000	
0xB07E81B4	PPC_PCFGR326 0XX00000 00000000	
0xB07E81B6	PPC_PCFGR327 0XX00000 00000000	
0xB07E81B8	PPC_PCFGR328 0XX00000 00000000	
0xB07E81BA	PPC_PCFGR329 0XX00000 00000000	
0xB07E81BC	PPC_PCFGR330 0XX00000 00000000	
0xB07E81BE	PPC_PCFGR331 0XX00000 00000000	
0xB07E81C0	PPC_PCFGR332 0XX00000 00000000	
0xB07E81C2	PPC_PCFGR333 0XX00000 00000000	
0xB07E81C4	PPC_PCFGR334 0XX00000 00000000	
0xB07E81C6	PPC_PCFGR335 0XX00000 00000000	
0xB07E81C8	PPC_PCFGR336 0XX00000 00000000	
0xB07E81CA	PPC_PCFGR337 0XX00000 00000000	
0xB07E81CC	PPC_PCFGR338 0XX00000 00000000	
0xB07E81CE	PPC_PCFGR339 0XX00000 00000000	
0xB07E81D0	PPC_PCFGR340 0XX00000 00000000	
0xB07E81D2	PPC_PCFGR341 0XX00000 00000000	
0xB07E81D4	PPC_PCFGR342 0XX00000 00000000	
0xB07E81D6- B07EFFFE	reserved XXXXXXXX XXXXXXXX	
0xB07F0000	BECU0_CTRL 00000000 00000000	
0xB07F0002	BECU0_CTRH 00000000 00000000	
0xB07F0004	BECU0_ADDRL 00000000 00000000	
0xB07F0006	BECU0_ADDRH 00000000 00000000	

Table 39. Memory Layout for the PERI0_RBUS Registers (Continued)

Offset	+1	+0
0xB07F0008	BECU0_DATALL 00000000 00000000	
0xB07F000A	BECU0_DATALH 00000000 00000000	
0xB07F000C	BECU0_DATAHL 00000000 00000000	
0xB07F000E	BECU0_DATAHH 00000000 00000000	
0xB07F0010	BECU0_MASTERID 00000000 00000000	
0xB07F0012	BECU0_MIDL XXXXXXXX XXXXXXXX	
0xB07F0014	BECU0_MIDH XXXXXXXX XXXXXXXX	
0xB07F0016	reserved 00000000 00000000	
0xB07F0018	BECU0_NMIEN XXXXXXXX 00000001	
0xB07F001A- B07F7FFE	reserved XXXXXXXX XXXXXXXX	
0xB07F8000	RICFG0_ADC0AN26 00000000 XXXXXXXX	
0xB07F8002	RICFG0_ADC0AN27 00000000 XXXXXXXX	
0xB07F8004	RICFG0_ADC0AN28 00000000 XXXXXXXX	
0xB07F8006	RICFG0_ADC0AN29 00000000 XXXXXXXX	
0xB07F8008	RICFG0_ADC0AN30 00000000 XXXXXXXX	
0xB07F800A	RICFG0_ADC0AN31 00000000 XXXXXXXX	
0xB07F800C	RICFG0_ADC0EDGI 00000000 00000000	
0xB07F800E	RICFG0_ADC0EDGIOCU0 XXXXXXXX 00000000	
0xB07F8010- B07F8014	reserved XXXXXXXX XXXXXXXX	
0xB07F8016	RICFG0_ADC0EDGIOCU4 XXXXXXXX 00000000	
0xB07F8018- B07F801C	reserved XXXXXXXX XXXXXXXX	
0xB07F801E	RICFG0_ADC0TIMI XXXXXXXX 00000000	
0xB07F8020	RICFG0_ADC0TIMIRLT XXXXXXXX 00000000	
0xB07F8022- B07F803C	reserved XXXXXXXX XXXXXXXX	
0xB07F803E	RICFG0_ADC0ZPDEN XXXXXXXX 00000000	
0xB07F8040- B07F83FE	reserved XXXXXXXX 00000000	

Table 39. Memory Layout for the PERI0_RBUS Registers (Continued)

Offset	+1	+0
0xB07F8400	RICFG0_FRT0TEXT 00000000 00000000	
0xB07F8402- B07F841E	reserved XXXXXXXX 00000000	
0xB07F8420	RICFG0_FRT1TEXT 00000000 00000000	
0xB07F8422- B07F843E	reserved XXXXXXXX 00000000	
0xB07F8440	RICFG0_FRT2TEXT 00000000 00000000	
0xB07F8442- B07F845E	reserved XXXXXXXX 00000000	
0xB07F8460	RICFG0_FRT3TEXT 00000000 00000000	
0xB07F8462- B07F883E	reserved XXXXXXXX 00000000	
0xB07F8840	RICFG0_ICU2IN0 00000000 XXXXXXXX	
0xB07F8842	RICFG0_ICU2IN1 00000000 XXXXXXXX	
0xB07F8844	RICFG0_ICU2FRTSEL XXXXXXXX 00000000	
0xB07F8846- B07F885E	reserved XXXXXXXX 00000000	
0xB07F8860	RICFG0_ICU3IN0 00000000 XXXXXXXX	
0xB07F8862	RICFG0_ICU3IN1 00000000 XXXXXXXX	
0xB07F8864	RICFG0_ICU3FRTSEL XXXXXXXX 00000000	
0xB07F8866- B07F8BFE	reserved XXXXXXXX 00000000	
0xB07F8C00	RICFG0_OCU0OTD0GATE XXXXXXXX 00000000	
0xB07F8C02	RICFG0_OCU0OTD0GM XXXXXXXX 00000000	
0xB07F8C04	RICFG0_OCU0OTD1GATE XXXXXXXX 00000000	
0xB07F8C06	RICFG0_OCU0OTD1GM XXXXXXXX 00000000	
0xB07F8C08- B07F8C1E	reserved XXXXXXXX 00000000	
0xB07F8C20	RICFG0_OCU1CMP0EXT XXXXXXXX 00000000	
0xB07F8C22	RICFG0_OCU1FRTSEL XXXXXXXX 00000000	
0xB07F8C24	RICFG0_OCU1OTD0GATE XXXXXXXX 00000000	
0xB07F8C26	RICFG0_OCU1OTD0GM XXXXXXXX 00000000	
0xB07F8C28	RICFG0_OCU1OTD1GATE XXXXXXXX 00000000	

Table 39. Memory Layout for the PERI0_RBUS Registers (Continued)

Offset	+1	+0
0xB07F8C2A	RICFG0_OCU1OTD1GM XXXXXXXX 00000000	
0xB07F8C2C- B07F93FE	reserved XXXXXXXX XXXXXXXX	
0xB07F9400	RICFG0_USART0SCKI 00000000 XXXXXXXX	
0xB07F9402	RICFG0_USART0SIN 00000000 XXXXXXXX	
0xB07F9404- B07F9BFE	reserved XXXXXXXX XXXXXXXX	
0xB07F9C00	RICFG0_PPG0PPGAGATE XXXXXXXX 00000000	
0xB07F9C02	RICFG0_PPG0PPGAGM XXXXXXXX 00000000	
0xB07F9C04	RICFG0_PPG0PPGBGATE XXXXXXXX 00000000	
0xB07F9C06	RICFG0_PPG0PPGBGM XXXXXXXX 00000000	
0xB07F9C08- B07F9C1E	reserved XXXXXXXX 00000000	
0xB07F9C20	RICFG0_PPG1PPGAGATE XXXXXXXX 00000000	
0xB07F9C22	RICFG0_PPG1PPGAGM XXXXXXXX 00000000	
0xB07F9C24	RICFG0_PPG1PPGBGATE XXXXXXXX 00000000	
0xB07F9C26	RICFG0_PPG1PPGBGM XXXXXXXX 00000000	
0xB07F9C28- B07F9C3E	reserved XXXXXXXX XXXXXXXX	
0xB07F9C40	RICFG0_PPG2PPGAGATE XXXXXXXX 00000000	
0xB07F9C42	RICFG0_PPG2PPGAGM XXXXXXXX 00000000	
0xB07F9C44	RICFG0_PPG2PPGBGATE XXXXXXXX 00000000	
0xB07F9C46	RICFG0_PPG2PPGBGM XXXXXXXX 00000000	
0xB07F9C48- B07F9C5E	reserved XXXXXXXX XXXXXXXX	
0xB07F9C60	RICFG0_PPG3PPGAGATE XXXXXXXX 00000000	
0xB07F9C62	RICFG0_PPG3PPGAGM XXXXXXXX 00000000	
0xB07F9C64	RICFG0_PPG3PPGBGATE XXXXXXXX 00000000	
0xB07F9C66	RICFG0_PPG3PPGBGM XXXXXXXX 00000000	
0xB07F9C68- B07F9C7E	reserved XXXXXXXX XXXXXXXX	
0xB07F9C80	RICFG0_PPG4PPGAGATE XXXXXXXX 00000000	

Table 39. Memory Layout for the PERI0_RBUS Registers (Continued)

Offset	+1	+0
0xB07F9C82	RICFG0_PPG4PPGAGM XXXXXXXX 00000000	
0xB07F9C84	RICFG0_PPG4PPGBGATE XXXXXXXX 00000000	
0xB07F9C86	RICFG0_PPG4PPGBGM XXXXXXXX 00000000	
0xB07F9C88- B07F9C9E	reserved XXXXXXXX XXXXXXXX	
0xB07F9CA0	RICFG0_PPG5PPGAGATE XXXXXXXX 00000000	
0xB07F9CA2	RICFG0_PPG5PPGAGM XXXXXXXX 00000000	
0xB07F9CA4	RICFG0_PPG5PPGBGATE XXXXXXXX 00000000	
0xB07F9CA6	RICFG0_PPG5PPGBGM XXXXXXXX 00000000	
0xB07F9CA8- B07F9CBE	reserved XXXXXXXX XXXXXXXX	
0xB07F9CC0	RICFG0_PPG6PPGAGATE XXXXXXXX 00000000	
0xB07F9CC2	RICFG0_PPG6PPGAGM XXXXXXXX 00000000	
0xB07F9CC4	RICFG0_PPG6PPGBGATE XXXXXXXX 00000000	
0xB07F9CC6	RICFG0_PPG6PPGBGM XXXXXXXX 00000000	
0xB07F9CC8- B07F9CDE	reserved XXXXXXXX XXXXXXXX	
0xB07F9CE0	RICFG0_PPG7PPGAGATE XXXXXXXX 00000000	
0xB07F9CE2	RICFG0_PPG7PPGAGM XXXXXXXX 00000000	
0xB07F9CE4	RICFG0_PPG7PPGBGATE XXXXXXXX 00000000	
0xB07F9CE6	RICFG0_PPG7PPGBGM XXXXXXXX 00000000	
0xB07F9CE8- B07F9CFE	reserved XXXXXXXX XXXXXXXX	
0xB07F9D00	RICFG0_PPG8PPGAGATE XXXXXXXX 00000000	
0xB07F9D02	RICFG0_PPG8PPGAGM XXXXXXXX 00000000	
0xB07F9D04	RICFG0_PPG8PPGBGATE XXXXXXXX 00000000	
0xB07F9D06	RICFG0_PPG8PPGBGM XXXXXXXX 00000000	
0xB07F9D08- B07F9D1E	reserved XXXXXXXX XXXXXXXX	
0xB07F9D20	RICFG0_PPG9PPGAGATE XXXXXXXX 00000000	
0xB07F9D22	RICFG0_PPG9PPGAGM XXXXXXXX 00000000	

Table 39. Memory Layout for the PERI0_RBUS Registers (Continued)

Offset	+1	+0
0xB07F9D24	RICFG0_PPG9PPGBGATE XXXXXXXX 00000000	
0xB07F9D26	RICFG0_PPG9PPGBGM XXXXXXXX 00000000	
0xB07F9D28- B07F9D3E	reserved XXXXXXXX XXXXXXXX	
0xB07F9D40	RICFG0_PPG10PPGAGATE XXXXXXXX 00000000	
0xB07F9D42	RICFG0_PPG10PPGAGM XXXXXXXX 00000000	
0xB07F9D44	RICFG0_PPG10PPGBGATE XXXXXXXX 00000000	
0xB07F9D46	RICFG0_PPG10PPGBGM XXXXXXXX 00000000	
0xB07F9D48- B07F9D5E	reserved XXXXXXXX XXXXXXXX	
0xB07F9D60	RICFG0_PPG11PPGAGATE XXXXXXXX 00000000	
0xB07F9D62	RICFG0_PPG11PPGAGM XXXXXXXX 00000000	
0xB07F9D64	RICFG0_PPG11PPGBGATE XXXXXXXX 00000000	
0xB07F9D66	RICFG0_PPG11PPGBGM XXXXXXXX 00000000	
0xB07F9D68- B07F9D7E	reserved XXXXXXXX XXXXXXXX	
0xB07F9D80	RICFG0_PPG12PPGAGATE XXXXXXXX 00000000	
0xB07F9D82	RICFG0_PPG12PPGAGM XXXXXXXX 00000000	
0xB07F9D84	RICFG0_PPG12PPGBGATE XXXXXXXX 00000000	
0xB07F9D86	RICFG0_PPG12PPGBGM XXXXXXXX 00000000	
0xB07F9D88- B07F9D9E	reserved XXXXXXXX XXXXXXXX	
0xB07F9DA0	RICFG0_PPG13PPGAGATE XXXXXXXX 00000000	
0xB07F9DA2	RICFG0_PPG13PPGAGM XXXXXXXX 00000000	
0xB07F9DA4	RICFG0_PPG13PPGBGATE XXXXXXXX 00000000	
0xB07F9DA6	RICFG0_PPG13PPGBGM XXXXXXXX 00000000	
0xB07F9DA8- B07F9DBE	reserved XXXXXXXX XXXXXXXX	
0xB07F9DC0	RICFG0_PPG14PPGAGATE XXXXXXXX 00000000	
0xB07F9DC2	RICFG0_PPG14PPGAGM XXXXXXXX 00000000	
0xB07F9DC4	RICFG0_PPG14PPGBGATE XXXXXXXX 00000000	

Table 39. Memory Layout for the PERI0_RBUS Registers (Continued)

Offset	+1	+0
0xB07F9DC6	RICFG0_PPG14PPGBGM XXXXXXXX 00000000	
0xB07F9DC8- B07F9DDE	reserved XXXXXXXX XXXXXXXX	
0xB07F9DE0	RICFG0_PPG15PPGAGATE XXXXXXXX 00000000	
0xB07F9DE2	RICFG0_PPG15PPGAGM XXXXXXXX 00000000	
0xB07F9DE4	RICFG0_PPG15PPGBGATE XXXXXXXX 00000000	
0xB07F9DE6	RICFG0_PPG15PPGBGM XXXXXXXX 00000000	
0xB07F9DE8- B07FA3FE	reserved XXXXXXXX XXXXXXXX	
0xB07FA400	RICFG0_PPGGRP0ETRG0 XXXXXXXX 00000000	
0xB07FA402	RICFG0_PPGGRP0ETRG1 XXXXXXXX 00000000	
0xB07FA404	RICFG0_PPGGRP0ETRG2 XXXXXXXX 00000000	
0xB07FA406	RICFG0_PPGGRP0ETRG3 XXXXXXXX 00000000	
0xB07FA408	RICFG0_PPGGRP0RLTTRG1 XXXXXXXX 00000000	
0xB07FA40A- B07FA41E	reserved XXXXXXXX XXXXXXXX	
0xB07FA420	RICFG0_PPGGRP1ETRG0 XXXXXXXX 00000000	
0xB07FA422	RICFG0_PPGGRP1ETRG1 XXXXXXXX 00000000	
0xB07FA424	RICFG0_PPGGRP1ETRG2 XXXXXXXX 00000000	
0xB07FA426	RICFG0_PPGGRP1ETRG3 XXXXXXXX 00000000	
0xB07FA428	RICFG0_PPGGRP1RLTTRG1 XXXXXXXX 00000000	
0xB07FA42A- B07FA43E	reserved XXXXXXXX XXXXXXXX	
0xB07FA440	RICFG0_PPGGRP2ETRG0 XXXXXXXX 00000000	
0xB07FA442	RICFG0_PPGGRP2ETRG1 XXXXXXXX 00000000	
0xB07FA444	RICFG0_PPGGRP2ETRG2 XXXXXXXX 00000000	
0xB07FA446	RICFG0_PPGGRP2ETRG3 XXXXXXXX 00000000	
0xB07FA448	RICFG0_PPGGRP2RLTTRG1 XXXXXXXX 00000000	
0xB07FA44A- B07FA45E	reserved XXXXXXXX XXXXXXXX	
0xB07FA460	RICFG0_PPGGRP3ETRG0 XXXXXXXX 00000000	

Table 39. Memory Layout for the PERI0_RBUS Registers (Continued)

Offset	+1	+0
0xB07FA462	RICFG0_PPGGRP3ETRG1 XXXXXXXX 00000000	
0xB07FA464	RICFG0_PPGGRP3ETRG2 XXXXXXXX 00000000	
0xB07FA466	RICFG0_PPGGRP3ETRG3 XXXXXXXX 00000000	
0xB07FA468	RICFG0_PPGGRP3RLTTRG1 XXXXXXXX 00000000	
0xB07FA46A- B07FC002	reserved XXXXXXXX XXXXXXXX	
0xB07FC004	BSU0_BTSTL 00000000 00000000	
0xB07FC006	BSU0_BTSTH 00000000 00000000	
0xB07FC008- B07FC00E	reserved XXXXXXXX XXXXXXXX	
0xB07FC010	BSU0_PEN0L XXXXXXXX 00000000	
0xB07FC012	reserved XXXXXXXX XXXXXXXX	
0xB07FC014	BSU0_PEN1L 00000000 00000000	
0xB07FC016	reserved XXXXXXXX XXXXXXXX	
0xB07FC018	BSU0_PEN2L 00000000 00000000	
0xB07FC01A	reserved XXXXXXXX XXXXXXXX	
0xB07FC01C	BSU0_PEN3L 00000000 00000000	
0xB07FC01E	reserved XXXXXXXX XXXXXXXX	
0xB07FC020	BSU0_PEN4L XXXXXXXX 00000000	
0xB07FC022	reserved XXXXXXXX XXXXXXXX	
0xB07FC024	BSU0_PEN5L XXXXXXXX 00000000	
0xB07FC026	reserved XXXXXXXX XXXXXXXX	
0xB07FC028	BSU0_PEN6L XXXXXXXX 00000000	
0xB07FC02A	reserved XXXXXXXX XXXXXXXX	
0xB07FC02C	BSU0_PEN7L 00000000 00000000	
0xB07FC02E	BSU0_PEN7H 00000000 00000000	
0xB07FC030	BSU0_PEN8L 00000000 00000000	
0xB07FC032	BSU0_PEN8H 00000000 00000000	

Table 39. Memory Layout for the PERI0_RBUS Registers (Continued)

Offset	+1	+0
0xB07FC034	BSU0_PEN9L 00000000 00000000	
0xB07FC036	BSU0_PEN9H XXXXXXXX 00000000	
0xB07FC038- B07FC03A	reserved XXXXXXXX XXXXXXXX	
0xB07FC03C	BSU0_PEN11L XXXXXXXX 00000000	
0xB07FC03E- B07FFFFE	reserved XXXXXXXX XXXXXXXX	

Table 40. Memory Layout of PERI1_RBUS Registers

Offset	+1	+0
0xB0800000	SG0_CR0 00000000 00000000	
0xB0800002	reserved XXXXXXXX	SG0_CR1 00000000
0xB0800004	SG0_ECRL 00000000 00000000	
0xB0800006	SG0_FRL 00000000 00000000	
0xB0800008	SG0_ARL 00000000 00000000	
0xB080000A	SG0_AR 00000000 00000000	
0xB080000C	SG0_TARL 00000000 00000000	
0xB080000E	SG0_TCRLIDRL 00000000 00000000	
0xB0800010	reserved XXXXXXXX	SG0_NRL 00000000
0xB0800012	SG0_DER 00000000 00000000	
0xB0800014	SG0_DMAR 00000000 00000000	
0xB0800016- B0807FFE	reserved XXXXXXXX XXXXXXXX	
0xB0808000	CAN0_CTRLR XXXXXXXX 000X0001	
0xB0808002	CAN0_STATR XXXXXXXX 00000000	
0xB0808004	CAN0_ERRCNT 00000000 00000000	
0xB0808006	CAN0_BTR X0100011 00000001	
0xB0808008	CAN0_INTR 00000000 00000000	
0xB080800A	CAN0_TESTR XXXXXXXX 000000XX	

Table 40. Memory Layout of PERI1_RBUS Registers (Continued)

Offset	+1	+0
0xB080800C	CAN0_BRPER XXXXXXXX XXXX0000	
0xB080800E	reserved XXXXXXXX XXXXXXXX	
0xB0808010	CAN0_IF1CREQ 0XXXXXXX 00000001	
0xB0808012	CAN0_IF1CMSK XXXXXXXX 00000000	
0xB0808014	CAN0_IF1MSK1 11111111 11111111	
0xB0808016	CAN0_IF1MSK2 11X11111 11111111	
0xB0808018	CAN0_IF1ARB1 00000000 00000000	
0xB080801A	CAN0_IF1ARB2 00000000 00000000	
0xB080801C	CAN0_IF1MCTR 00000000 0XXX0000	
0xB080801E	reserved XXXXXXXX XXXXXXXX	
0xB0808020	CAN0_IF1DTA1 00000000 00000000	
0xB0808022	CAN0_IF1DTA2 00000000 00000000	
0xB0808024	CAN0_IF1DTB1 00000000 00000000	
0xB0808026	CAN0_IF1DTB2 00000000 00000000	
0xB0808028- B080803E	reserved XXXXXXXX XXXXXXXX	
0xB0808040	CAN0_IF2CREQ 0XXXXXXX 00000001	
0xB0808042	CAN0_IF2CMSK XXXXXXXX 00000000	
0xB0808044	CAN0_IF2MSK1 11111111 11111111	
0xB0808046	CAN0_IF2MSK2 11X11111 11111111	
0xB0808048	CAN0_IF2ARB1 00000000 00000000	
0xB080804A	CAN0_IF2ARB2 00000000 00000000	
0xB080804C	CAN0_IF2MCTR 00000000 00000000	
0xB080804E	reserved XXXXXXXX XXXXXXXX	
0xB0808050	CAN0_IF2DTA1 00000000 00000000	
0xB0808052	CAN0_IF2DTA2 00000000 00000000	
0xB0808054	CAN0_IF2DTB1 00000000 00000000	

Table 40. Memory Layout of PERI1_RBUS Registers (Continued)

Offset	+1	+0
0xB0808056	CAN0_IF2DTB2 00000000 00000000	
0xB0808058- B080807E	reserved XXXXXXXX XXXXXXXX	
0xB0808080	CAN0_TREQR1 00000000 00000000	
0xB0808082	CAN0_TREQR2 00000000 00000000	
0xB0808084	CAN0_TREQR3 00000000 00000000	
0xB0808086	CAN0_TREQR4 00000000 00000000	
0xB0808088- B080808E	reserved XXXXXXXX XXXXXXXX	
0xB0808090	CAN0_NEWDT1 00000000 00000000	
0xB0808092	CAN0_NEWDT2 00000000 00000000	
0xB0808094	CAN0_NEWDT3 00000000 00000000	
0xB0808096	CAN0_NEWDT4 00000000 00000000	
0xB0808098- B080809E	reserved XXXXXXXX XXXXXXXX	
0xB08080A0	CAN0_INTPND1 00000000 00000000	
0xB08080A2	CAN0_INTPND2 00000000 00000000	
0xB08080A4	CAN0_INTPND3 00000000 00000000	
0xB08080A6	CAN0_INTPND4 00000000 00000000	
0xB08080A8- B08080AE	reserved XXXXXXXX XXXXXXXX	
0xB08080B0	CAN0_MSGVAL1 00000000 00000000	
0xB08080B2	CAN0_MSGVAL2 00000000 00000000	
0xB08080B4	CAN0_MSGVAL3 00000000 00000000	
0xB08080B6	CAN0_MSGVAL4 00000000 00000000	
0xB08080B8- B08080CC	reserved XXXXXXXX XXXXXXXX	
0xB08080CE	reserved 00000000	CAN0_COER XXXXXXX0
0xB08080D0	CAN0_DEBUG XXXXXXXX 00000000	
0xB08080D2- B08083FE	reserved XXXXXXXX XXXXXXXX	
0xB0808400	CAN1_CTRLR XXXXXXXX 000X0001	

Table 40. Memory Layout of PERI1_RBUS Registers (Continued)

Offset	+1	+0
0xB0808402	CAN1_STATR XXXXXXXX 00000000	
0xB0808404	CAN1_ERRCNT 00000000 00000000	
0xB0808406	CAN1_BTR X0100011 00000001	
0xB0808408	CAN1_INTR 00000000 00000000	
0xB080840A	CAN1_TESTR XXXXXXXX 000000XX	
0xB080840C	CAN1_BRPER XXXXXXXX XXXX0000	
0xB080840E	reserved XXXXXXXX XXXXXXXX	
0xB0808410	CAN1_IF1CREQ 0XXXXXXX 00000001	
0xB0808412	CAN1_IF1CMSK XXXXXXXX 00000000	
0xB0808414	CAN1_IF1MSK1 11111111 11111111	
0xB0808416	CAN1_IF1MSK2 11X11111 11111111	
0xB0808418	CAN1_IF1ARB1 00000000 00000000	
0xB080841A	CAN1_IF1ARB2 00000000 00000000	
0xB080841C	CAN1_IF1MCTR 00000000 0XXX0000	
0xB080841E	reserved 00000000 00000000	
0xB0808420	CAN1_IF1DTA1 00000000 00000000	
0xB0808422	CAN1_IF1DTA2 00000000 00000000	
0xB0808424	CAN1_IF1DTB1 00000000 00000000	
0xB0808426	CAN1_IF1DTB2 00000000 00000000	
0xB0808428- B080843E	reserved XXXXXXXX XXXXXXXX	
0xB0808440	CAN1_IF2CREQ 0XXXXXXX 00000001	
0xB0808442	CAN1_IF2CMSK XXXXXXXX 00000000	
0xB0808444	CAN1_IF2MSK1 11111111 11111111	
0xB0808446	CAN1_IF2MSK2 11X11111 11111111	
0xB0808448	CAN1_IF2ARB1 00000000 00000000	
0xB080844A	CAN1_IF2ARB2 00000000 00000000	

Table 40. Memory Layout of PERI1_RBUS Registers (Continued)

Offset	+1	+0
0xB080844C	CAN1_IF2MCTR 00000000 00000000	
0xB080844E	reserved XXXXXXXX XXXXXXXX	
0xB0808450	CAN1_IF2DTA1 00000000 00000000	
0xB0808452	CAN1_IF2DTA2 00000000 00000000	
0xB0808454	CAN1_IF2DTB1 00000000 00000000	
0xB0808456	CAN1_IF2DTB2 00000000 00000000	
0xB0808458- B080847E	reserved XXXXXXXX XXXXXXXX	
0xB0808480	CAN1_TREQR1 00000000 00000000	
0xB0808482	CAN1_TREQR2 00000000 00000000	
0xB0808484	CAN1_TREQR3 00000000 00000000	
0xB0808486	CAN1_TREQR4 00000000 00000000	
0xB0808488- B080848E	reserved XXXXXXXX XXXXXXXX	
0xB0808490	CAN1_NEWDT1 00000000 00000000	
0xB0808492	CAN1_NEWDT2 00000000 00000000	
0xB0808494	CAN1_NEWDT3 00000000 00000000	
0xB0808496	CAN1_NEWDT4 00000000 00000000	
0xB0808498- B080849E	reserved XXXXXXXX XXXXXXXX	
0xB08084A0	CAN1_INTPND1 00000000 00000000	
0xB08084A2	CAN1_INTPND2 00000000 00000000	
0xB08084A4	CAN1_INTPND3 00000000 00000000	
0xB08084A6	CAN1_INTPND4 00000000 00000000	
0xB08084A8- B08084AE	reserved XXXXXXXX XXXXXXXX	
0xB08084B0	CAN1_MSGVAL1 00000000 00000000	
0xB08084B2	CAN1_MSGVAL2 00000000 00000000	
0xB08084B4	CAN1_MSGVAL3 00000000 00000000	
0xB08084B6	CAN1_MSGVAL4 00000000 00000000	

Table 40. Memory Layout of PERI1_RBUS Registers (Continued)

Offset	+1	+0
0xB08084B8- B08084CC	reserved XXXXXXXX XXXXXXXX	
0xB08084CE	reserved 00000000	CAN1_COER XXXXXXX0
0xB08084D0	CAN1_DEBUG XXXXXXXX 00000000	
0xB08084D2- B08087FE	reserved XXXXXXXX XXXXXXXX	
0xB0808800	CAN2_CTRLR XXXXXXXX 000X0001	
0xB0808802	CAN2_STATR XXXXXXXX 00000000	
0xB0808804	CAN2_ERRCNT 00000000 00000000	
0xB0808806	CAN2_BTR X0100011 00000001	
0xB0808808	CAN2_INTR 00000000 00000000	
0xB080880A	CAN2_TESTR XXXXXXXX 000000XX	
0xB080880C	CAN2_BRPER XXXXXXXX XXXX0000	
0xB080880E	reserved XXXXXXXX XXXXXXXX	
0xB0808810	CAN2_IF1CREQ 0XXXXXXX 00000001	
0xB0808812	CAN2_IF1CMSK XXXXXXXX 00000000	
0xB0808814	CAN2_IF1MSK1 11111111 11111111	
0xB0808816	CAN2_IF1MSK2 11X11111 11111111	
0xB0808818	CAN2_IF1ARB1 00000000 00000000	
0xB080881A	CAN2_IF1ARB2 00000000 00000000	
0xB080881C	CAN2_IF1MCTR 00000000 0XXX0000	
0xB080881E	reserved XXXXXXXX XXXXXXXX	
0xB0808820	CAN2_IF1DTA1 00000000 00000000	
0xB0808822	CAN2_IF1DTA2 00000000 00000000	
0xB0808824	CAN2_IF1DTB1 00000000 00000000	
0xB0808826	CAN2_IF1DTB2 00000000 00000000	
0xB0808828- B080883E	reserved XXXXXXXX XXXXXXXX	
0xB0808840	CAN2_IF2CREQ 0XXXXXXX 00000001	

Table 40. Memory Layout of PERI1_RBUS Registers (Continued)

Offset	+1	+0
0xB0808842	CAN2_IF2CMSK XXXXXXXX 00000000	
0xB0808844	CAN2_IF2MSK1 11111111 11111111	
0xB0808846	CAN2_IF2MSK2 11X11111 11111111	
0xB0808848	CAN2_IF2ARB1 00000000 00000000	
0xB080884A	CAN2_IF2ARB2 00000000 00000000	
0xB080884C	CAN2_IF2MCTR 00000000 00000000	
0xB080884E	reserved XXXXXXXX XXXXXXXX	
0xB0808850	CAN2_IF2DTA1 00000000 00000000	
0xB0808852	CAN2_IF2DTA2 00000000 00000000	
0xB0808854	CAN2_IF2DTB1 00000000 00000000	
0xB0808856	CAN2_IF2DTB2 00000000 00000000	
0xB0808858- B080887E	reserved XXXXXXXX XXXXXXXX	
0xB0808880	CAN2_TREQR1 00000000 00000000	
0xB0808882	CAN2_TREQR2 00000000 00000000	
0xB0808884	CAN2_TREQR3 00000000 00000000	
0xB0808886	CAN2_TREQR4 00000000 00000000	
0xB0808888- B080888E	reserved XXXXXXXX XXXXXXXX	
0xB0808890	CAN2_NEWDT1 00000000 00000000	
0xB0808892	CAN2_NEWDT2 00000000 00000000	
0xB0808894	CAN2_NEWDT3 00000000 00000000	
0xB0808896	CAN2_NEWDT4 00000000 00000000	
0xB0808898- B080889E	reserved XXXXXXXX XXXXXXXX	
0xB08088A0	CAN2_INTPND1 00000000 00000000	
0xB08088A2	CAN2_INTPND2 00000000 00000000	
0xB08088A4	CAN2_INTPND3 00000000 00000000	
0xB08088A6	CAN2_INTPND4 00000000 00000000	

Table 40. Memory Layout of PERI1_RBUS Registers (Continued)

Offset	+1	+0
0xB08088A8- B08088AE	reserved XXXXXXXX XXXXXXXX	
0xB08088B0	CAN2_MSGVAL1 00000000 00000000	
0xB08088B2	CAN2_MSGVAL2 00000000 00000000	
0xB08088B4	CAN2_MSGVAL3 00000000 00000000	
0xB08088B6	CAN2_MSGVAL4 00000000 00000000	
0xB08088B8- B08088CC	reserved XXXXXXXX XXXXXXXX	
0xB08088CE	reserved 00000000	CAN2_COER XXXXXXX0
0xB08088D0	CAN2_DEBUG XXXXXXXX 00000000	
0xB08088D2- B0817FFE	reserved XXXXXXXX XXXXXXXX	
0xB0818000	FRT16_TCDT 00000000 00000000	
0xB0818002	FRT16_CPCLRB 11111111 11111111	
0xB0818004	FRT16_CPCLR 11111111 11111111	
0xB0818006	FRT16_TCCS 00000000 00000000	
0xB0818008	FRT16_TSTPTCLK 01000000 00000000	
0xB081800A	FRT16_ETCCS 00000000 00000000	
0xB081800C	FRT16_CIMSZIMS 00000000 00000000	
0xB081800E	reserved XXXXXXXX	FRT16_DMACFG 00000000
0xB0818010- B08183FE	reserved XXXXXXXX XXXXXXXX	
0xB0818400	FRT17_TCDT 00000000 00000000	
0xB0818402	FRT17_CPCLRB 11111111 11111111	
0xB0818404	FRT17_CPCLR 11111111 11111111	
0xB0818406	FRT17_TCCS 00000000 00000000	
0xB0818408	FRT17_TSTPTCLK 01000000 00000000	
0xB081840A	FRT17_ETCCS 00000000 00000000	
0xB081840C	FRT17_CIMSZIMS 00000000 00000000	
0xB081840E	reserved XXXXXXXX	FRT17_DMACFG 00000000

Table 40. Memory Layout of PERI1_RBUS Registers (Continued)

Offset	+1	+0
0xB0818410- B08187FE	reserved XXXXXXXX XXXXXXXX	
0xB0818800	FRT18_TCDT 00000000 00000000	
0xB0818802	FRT18_CPCLRB 11111111 11111111	
0xB0818804	FRT18_CPCLR 11111111 11111111	
0xB0818806	FRT18_TCCS 00000000 00000000	
0xB0818808	FRT18_TSTPTCLK 01000000 00000000	
0xB081880A	FRT18_ETCCS 00000000 00000000	
0xB081880C	FRT18_CIMSZIMS 00000000 00000000	
0xB081880E	reserved XXXXXXXX	FRT18_DMACFG 00000000
0xB0818810- B0818BFE	reserved XXXXXXXX XXXXXXXX	
0xB0818C00	FRT19_TCDT 00000000 00000000	
0xB0818C02	FRT19_CPCLRB 11111111 11111111	
0xB0818C04	FRT19_CPCLR 11111111 11111111	
0xB0818C06	FRT19_TCCS 00000000 00000000	
0xB0818C08	FRT19_TSTPTCLK 01000000 00000000	
0xB0818C0A	FRT19_ETCCS 00000000 00000000	
0xB0818C0C	FRT19_CIMSZIMS 00000000 00000000	
0xB0818C0E	reserved XXXXXXXX	FRT19_DMACFG 00000000
0xB0818C10- B08207FE	reserved XXXXXXXX XXXXXXXX	
0xB0820800	ICU18_IPC0 00000000 00000000	
0xB0820802	ICU18_IPC1 00000000 00000000	
0xB0820804	ICU18_ICC01 00000000 00000000	
0xB0820806	ICU18_ICEICS01 00000000 00000000	
0xB0820808	ICU18_DEBUG01 00000000	ICU18_DMACFG01 00000000
0xB082080A- B0820BFE	reserved XXXXXXXX XXXXXXXX	
0xB0820C00	ICU19_IPC0 00000000 00000000	

Table 40. Memory Layout of PERI1_RBUS Registers (Continued)

Offset	+1	+0
0xB0820C02	ICU19_IPC1 00000000 00000000	
0xB0820C04	ICU19_ICC01 00000000 00000000	
0xB0820C06	ICU19_ICEICS01 00000000 00000000	
0xB0820C08	ICU19_DEBUG01 00000000	ICU19_DMACFG01 00000000
0xB0820C0A- B0827FFE	reserved XXXXXXXX XXXXXXXX	
0xB0828000	OCU16_OCCP0 00000000 00000000	
0xB0828002	OCU16_OCCP1 00000000 00000000	
0xB0828004	OCU16_OCCPB0 00000000 00000000	
0xB0828006	OCU16_OCCPB1 00000000 00000000	
0xB0828008	OCU16_OCCPBD0 00000000 00000000	
0xB082800A	OCU16_OCCPBD1 00000000 00000000	
0xB082800C	OCU16_OCS01 00000000 00000000	
0xB082800E	OCU16_OCSC01 00000000 00000000	
0xB0828010	OCU16_OCSS01 00000000 00000000	
0xB0828012	reserved XXXXXXXX	OCU16_OSR01 00000000
0xB0828014	reserved XXXXXXXX	OCU16_OSCR01 00000000
0xB0828016	OCU16_EOCS01 00000000 00000000	
0xB0828018	OCU16_EOCSSH01 00000000	reserved XXXXXXXX
0xB082801A	OCU16_EOCSCH01 00000000	reserved XXXXXXXX
0xB082801C	OCU16_DEBUG01 00000000	OCU16_DMACFG01 00000000
0xB082801E	OCU16_OCMCR01 00000000	reserved XXXXXXXX
0xB0828020- B08283FE	reserved XXXXXXXX XXXXXXXX	
0xB0828400	OCU17_OCCP0 00000000 00000000	
0xB0828402	OCU17_OCCP1 00000000 00000000	
0xB0828404	OCU17_OCCPB0 00000000 00000000	
0xB0828406	OCU17_OCCPB1 00000000 00000000	

Table 40. Memory Layout of PERI1_RBUS Registers (Continued)

Offset	+1	+0
0xB0828408	OCU17_OCCPBD0 00000000 00000000	
0xB082840A	OCU17_OCCPBD1 00000000 00000000	
0xB082840C	OCU17_OCS01 00000000 00000000	
0xB082840E	OCU17_OCSC01 00000000 00000000	
0xB0828410	OCU17_OCSS01 00000000 00000000	
0xB0828412	reserved XXXXXXXX	OCU17_OSR01 00000000
0xB0828414	reserved XXXXXXXX	OCU17_OSCR01 00000000
0xB0828416	OCU17_EOCS01 00000000 00000000	
0xB0828418	OCU17_EOCSSH01 00000000	reserved XXXXXXXX
0xB082841A	OCU17_EOCSCH01 00000000	reserved XXXXXXXX
0xB082841C	OCU17_DEBUG01 00000000	OCU17_DMACFG01 00000000
0xB082841E	OCU17_OCMCR01 00000000	reserved XXXXXXXX
0xB0828420- B0837FFE	reserved XXXXXXXX XXXXXXXX	
0xB0838000	USART6_SCR 00000000	USART6_SMR 00000000
0xB0838002	USART6_SCSR 00000000	USART6_SMSR 00000000
0xB0838004	USART6_SCCR 00000000	reserved XXXXXXXX
0xB0838006	USART6_SSR 00001000	USART6_TDR 00000000
0xB0838008	USART6_SSSR 00000000	USART6_RDR 00000000
0xB083800A	USART6_SSCR 00000000	reserved XXXXXXXX
0xB083800C	USART6_ESCR 00000100	USART6_ECCR 000000XX
0xB083800E	USART6_ESCSR 00000000	USART6_ECCSR 00000000
0xB0838010	USART6_ESCCR 00000000	USART6_ECCCR 00000000
0xB0838012	USART6_EIER 00000000	USART6_ESIR 000010X0
0xB0838014	USART6_EIESR 00000000	USART6_ESISR 00000000
0xB0838016	USART6_EIECR 00000000	USART6_ESICR 00000000

Table 40. Memory Layout of PERI1_RBUS Registers (Continued)

Offset	+1	+0
0xB0838018	USART6_EFERH 00000000	USART6_EFERL 00000000
0xB083801A	USART6_TFCR 00000000	USART6_RFCR 00000000
0xB083801C	USART6_TFCSR 00000000	USART6_RFCSR 00000000
0xB083801E	USART6_TFCCR 00000000	USART6_RFCCR 00000000
0xB0838020	USART6_TFSR 00000000	USART6_RFSR 00000000
0xB0838022	USART6_ESR 00000000	USART6_CSCR 00000000
0xB0838024	reserved XXXXXXXX	USART6_CSCSR 00000000
0xB0838026	USART6_ESCLR 00000000	USART6_CSCCR 00000000
0xB0838028	USART6_BGRLM 00000000	USART6_BGRLL 00000000
0xB083802A	reserved XXXXXXXX	USART6_BGRLH 00000000
0xB083802C	USART6_BGRM 00000000	USART6_BGRL 00000000
0xB083802E	reserved XXXXXXXX	USART6_BGRH 00000000
0xB0838030	USART6_SRXDR 00000000	USART6_STXDR 00000000
0xB0838032	USART6_SRXDSR 00000000	USART6_STXDSR 00000000
0xB0838034	USART6_SRXDCR 00000000	USART6_STXDCR 00000000
0xB0838036	read0 00000000	read0 00000000
0xB0838038	reserved XXXXXXXX	read0 00000000
0xB083803A	reserved XXXXXXXX	USART6_FIDR 00000000
0xB083803C	reserved XXXXXXXX	USART6_DEBUG 00000000
0xB083803E- B0847FFE	reserved XXXXXXXX XXXXXXXX	
0xB0848000	PPG64_PCN 00000000 00000000	
0xB0848002	PPG64_SWTRIG 00000000	PPG64_IRQCLR 00000000
0xB0848004	PPG64_CNTEN 00000000	PPG64_OE 00000000
0xB0848006	PPG64_RMPCFG 00000000	PPG64_OPTMSK 00000000
0xB0848008	PPG64_TRIGCLR 00000000	PPG64_STRD 00000000

Table 40. Memory Layout of PERI1_RBUS Registers (Continued)

Offset	+1	+0
0xB084800A	PPG64_EPCN1 00000000 00000000	
0xB084800C	PPG64_EPCN2 00000000 00000000	
0xB084800E	PPG64_GCN3 00000000	PPG64_GCN1 00000000
0xB0848010	PPG64_GCN5 00000000	PPG64_GCN4 00000110
0xB0848012	PPG64_PCSR XXXXXXXX XXXXXXXX	
0xB0848014	PPG64_PDUT XXXXXXXX XXXXXXXX	
0xB0848016	PPG64_PTMR 11111111 11111111	
0xB0848018	PPG64_PSDR 00000000 00000000	
0xB084801A	PPG64_PTPC 00000000 00000000	
0xB084801C	PPG64_PEDR 00000000 00000000	
0xB084801E	PPG64_DEBUG 00000000	PPG64_DMACFG 00000000
0xB0848020- B08483FE	reserved XXXXXXXX XXXXXXXX	
0xB0848400	PPG65_PCN 00000000 00000000	
0xB0848402	PPG65_SWTRIG 00000000	PPG65_IRQCLR 00000000
0xB0848404	PPG65_CNTEN 00000000	PPG65_OE 00000000
0xB0848406	PPG65_RMPCFG 00000000	PPG65_OPTMSK 00000000
0xB0848408	PPG65_TRIGCLR 00000000	PPG65_STRD 00000000
0xB084840A	PPG65_EPCN1 00000000 00000000	
0xB084840C	PPG65_EPCN2 00000000 00000000	
0xB084840E	PPG65_GCN3 00000000	PPG65_GCN1 00000000
0xB0848410	PPG65_GCN5 00000000	PPG65_GCN4 00000110
0xB0848412	PPG65_PCSR XXXXXXXX XXXXXXXX	
0xB0848414	PPG65_PDUT XXXXXXXX XXXXXXXX	
0xB0848416	PPG65_PTMR 11111111 11111111	
0xB0848418	PPG65_PSDR 00000000 00000000	
0xB084841A	PPG65_PTPC 00000000 00000000	

Table 40. Memory Layout of PERI1_RBUS Registers (Continued)

Offset	+1	+0
0xB084841C	PPG65_PEDR 00000000 00000000	
0xB084841E	PPG65_DEBUG 00000000	PPG65_DMACFG 00000000
0xB0848420- B08487FE	reserved XXXXXXXX XXXXXXXX	
0xB0848800	PPG66_PCN 00000000 00000000	
0xB0848802	PPG66_SWTRIG 00000000	PPG66_IRQCLR 00000000
0xB0848804	PPG66_CNTEN 00000000	PPG66_OE 00000000
0xB0848806	PPG66_RMPCFG 00000000	PPG66_OPTMSK 00000000
0xB0848808	PPG66_TRIGCLR 00000000	PPG66_STRD 00000000
0xB084880A	PPG66_EPCN1 00000000 00000000	
0xB084880C	PPG66_EPCN2 00000000 00000000	
0xB084880E	PPG66_GCN3 00000000	PPG66_GCN1 00000000
0xB0848810	PPG66_GCN5 00000000	PPG66_GCN4 00000110
0xB0848812	PPG66_PCSR XXXXXXXX XXXXXXXX	
0xB0848814	PPG66_PDUT XXXXXXXX XXXXXXXX	
0xB0848816	PPG66_PTMR 11111111 11111111	
0xB0848818	PPG66_PSDR 00000000 00000000	
0xB084881A	PPG66_PTPC 00000000 00000000	
0xB084881C	PPG66_PEDR 00000000 00000000	
0xB084881E	PPG66_DEBUG 00000000	PPG66_DMACFG 00000000
0xB0848820- B0848BFE	reserved XXXXXXXX XXXXXXXX	
0xB0848C00	PPG67_PCN 00000000 00000000	
0xB0848C02	PPG67_SWTRIG 00000000	PPG67_IRQCLR 00000000
0xB0848C04	PPG67_CNTEN 00000000	PPG67_OE 00000000
0xB0848C06	PPG67_RMPCFG 00000000	PPG67_OPTMSK 00000000
0xB0848C08	PPG67_TRIGCLR 00000000	PPG67_STRD 00000000
0xB0848C0A	PPG67_EPCN1 00000000 00000000	

Table 40. Memory Layout of PERI1_RBUS Registers (Continued)

Offset	+1	+0
0xB0848C0C	PPG67_EPCN2 00000000 00000000	
0xB0848C0E	PPG67_GCN3 00000000	PPG67_GCN1 00000000
0xB0848C10	PPG67_GCN5 00000000	PPG67_GCN4 00000110
0xB0848C12	PPG67_PCSR XXXXXXXX XXXXXXXX	
0xB0848C14	PPG67_PDUT XXXXXXXX XXXXXXXX	
0xB0848C16	PPG67_PTMR 11111111 11111111	
0xB0848C18	PPG67_PSDR 00000000 00000000	
0xB0848C1A	PPG67_PTPC 00000000 00000000	
0xB0848C1C	PPG67_PEDR 00000000 00000000	
0xB0848C1E	PPG67_DEBUG 00000000	PPG67_DMACFG 00000000
0xB0848C20- B0848FFE	reserved XXXXXXXX XXXXXXXX	
0xB0849000	PPG68_PCN 00000000 00000000	
0xB0849002	PPG68_SWTRIG 00000000	PPG68_IRQCLR 00000000
0xB0849004	PPG68_CNTEN 00000000	PPG68_OE 00000000
0xB0849006	PPG68_RMPCFG 00000000	PPG68_OPTMSK 00000000
0xB0849008	PPG68_TRIGCLR 00000000	PPG68_STRD 00000000
0xB084900A	PPG68_EPCN1 00000000 00000000	
0xB084900C	PPG68_EPCN2 00000000 00000000	
0xB084900E	PPG68_GCN3 00000000	PPG68_GCN1 00000000
0xB0849010	PPG68_GCN5 00000000	PPG68_GCN4 00000110
0xB0849012	PPG68_PCSR XXXXXXXX XXXXXXXX	
0xB0849014	PPG68_PDUT XXXXXXXX XXXXXXXX	
0xB0849016	PPG68_PTMR 11111111 11111111	
0xB0849018	PPG68_PSDR 00000000 00000000	
0xB084901A	PPG68_PTPC 00000000 00000000	
0xB084901C	PPG68_PEDR 00000000 00000000	

Table 40. Memory Layout of PERI1_RBUS Registers (Continued)

Offset	+1	+0
0xB084901E	PPG68_DEBUG 00000000	PPG68_DMACFG 00000000
0xB0849020- B08493FE	reserved XXXXXXXX XXXXXXXX	
0xB0849400	PPG69_PCN 00000000 00000000	
0xB0849402	PPG69_SWTRIG 00000000	PPG69_IRQCLR 00000000
0xB0849404	PPG69_CNTEN 00000000	PPG69_OE 00000000
0xB0849406	PPG69_RMPCFG 00000000	PPG69_OPTMSK 00000000
0xB0849408	PPG69_TRIGCLR 00000000	PPG69_STRD 00000000
0xB084940A	PPG69_EPCN1 00000000 00000000	
0xB084940C	PPG69_EPCN2 00000000 00000000	
0xB084940E	PPG69_GCN3 00000000	PPG69_GCN1 00000000
0xB0849410	PPG69_GCN5 00000000	PPG69_GCN4 00000110
0xB0849412	PPG69_PCSR XXXXXXXX XXXXXXXX	
0xB0849414	PPG69_PDUT XXXXXXXX XXXXXXXX	
0xB0849416	PPG69_PTMR 11111111 11111111	
0xB0849418	PPG69_PSDR 00000000 00000000	
0xB084941A	PPG69_PTPC 00000000 00000000	
0xB084941C	PPG69_PEDR 00000000 00000000	
0xB084941E	PPG69_DEBUG 00000000	PPG69_DMACFG 00000000
0xB0849420- B08497FE	reserved XXXXXXXX XXXXXXXX	
0xB0849800	PPG70_PCN 00000000 00000000	
0xB0849802	PPG70_SWTRIG 00000000	PPG70_IRQCLR 00000000
0xB0849804	PPG70_CNTEN 00000000	PPG70_OE 00000000
0xB0849806	PPG70_RMPCFG 00000000	PPG70_OPTMSK 00000000
0xB0849808	PPG70_TRIGCLR 00000000	PPG70_STRD 00000000
0xB084980A	PPG70_EPCN1 00000000 00000000	
0xB084980C	PPG70_EPCN2 00000000 00000000	

Table 40. Memory Layout of PERI1_RBUS Registers (Continued)

Offset	+1	+0
0xB084980E	PPG70_GCN3 00000000	PPG70_GCN1 00000000
0xB0849810	PPG70_GCN5 00000000	PPG70_GCN4 00000110
0xB0849812	PPG70_PCSR XXXXXXXX XXXXXXXX	
0xB0849814	PPG70_PDUT XXXXXXXX XXXXXXXX	
0xB0849816	PPG70_PTMR 11111111 11111111	
0xB0849818	PPG70_PSDR 00000000 00000000	
0xB084981A	PPG70_PTPC 00000000 00000000	
0xB084981C	PPG70_PEDR 00000000 00000000	
0xB084981E	PPG70_DEBUG 00000000	PPG70_DMACFG 00000000
0xB0849820- B0849BFE	reserved XXXXXXXX XXXXXXXX	
0xB0849C00	PPG71_PCN 00000000 00000000	
0xB0849C02	PPG71_SWTRIG 00000000	PPG71_IRQCLR 00000000
0xB0849C04	PPG71_CNTEN 00000000	PPG71_OE 00000000
0xB0849C06	PPG71_RMPCFG 00000000	PPG71_OPTMSK 00000000
0xB0849C08	PPG71_TRIGCLR 00000000	PPG71_STRD 00000000
0xB0849C0A	PPG71_EPCN1 00000000 00000000	
0xB0849C0C	PPG71_EPCN2 00000000 00000000	
0xB0849C0E	PPG71_GCN3 00000000	PPG71_GCN1 00000000
0xB0849C10	PPG71_GCN5 00000000	PPG71_GCN4 00000110
0xB0849C12	PPG71_PCSR XXXXXXXX XXXXXXXX	
0xB0849C14	PPG71_PDUT XXXXXXXX XXXXXXXX	
0xB0849C16	PPG71_PTMR 11111111 11111111	
0xB0849C18	PPG71_PSDR 00000000 00000000	
0xB0849C1A	PPG71_PTPC 00000000 00000000	
0xB0849C1C	PPG71_PEDR 00000000 00000000	
0xB0849C1E	PPG71_DEBUG 00000000	PPG71_DMACFG 00000000

Table 40. Memory Layout of PERI1_RBUS Registers (Continued)

Offset	+1	+0
0xB0849C20- B0857FFE	reserved XXXXXXXX XXXXXXXX	
0xB0858000	reserved XXXXXXXX	PPGGRP16_GCTRL 00000000
0xB0858002- B08583FE	reserved XXXXXXXX XXXXXXXX	
0xB0858400	reserved XXXXXXXX	PPGGRP17_GCTRL 00000000
0xB0858402- B085BFFE	reserved XXXXXXXX XXXXXXXX	
0xB085C000	reserved XXXXXXXX	PPGGLC1_GCNR 00000000
0xB085C002- B08EFFFE	reserved XXXXXXXX XXXXXXXX	
0xB08F0000	BECU1_CTRL 00000000 00000000	
0xB08F0002	BECU1_CTRH 00000000 00000000	
0xB08F0004	BECU1_ADDRL 00000000 00000000	
0xB08F0006	BECU1_ADDRH 00000000 00000000	
0xB08F0008	BECU1_DATALL 00000000 00000000	
0xB08F000A	BECU1_DATALH 00000000 00000000	
0xB08F000C	BECU1_DATAHL 00000000 00000000	
0xB08F000E	BECU1_DATAHH 00000000 00000000	
0xB08F0010	BECU1_MASTERID 00000000 00000000	
0xB08F0012	BECU1_MIDL XXXXXXXX XXXXXXXX	
0xB08F0014	BECU1_MIDH XXXXXXXX XXXXXXXX	
0xB08F0016	reserved 00000000 00000000	
0xB08F0018	BECU1_NMIEN XXXXXXXX 00000001	
0xB08F001A- B08F83FE	reserved XXXXXXXX XXXXXXXX	
0xB08F8400	RICFG1_CAN0RX 00000000 00000000	
0xB08F8402- B08F841E	reserved XXXXXXXX 00000000	
0xB08F8420	RICFG1_CAN1RX 00000000 00000000	
0xB08F8422- B08F843E	reserved XXXXXXXX 00000000	
0xB08F8440	RICFG1_CAN2RX 00000000 00000000	

Table 40. Memory Layout of PERI1_RBUS Registers (Continued)

Offset	+1	+0
0xB08F8442- B08F8BFE	reserved XXXXXXXX 00000000	
0xB08F8C00	RICFG1_FRT16TEXT 00000000 00000000	
0xB08F8C02- B08F8C1E	reserved XXXXXXXX 00000000	
0xB08F8C20	RICFG1_FRT17TEXT 00000000 00000000	
0xB08F8C22- B08F8C3E	reserved XXXXXXXX 00000000	
0xB08F8C40	RICFG1_FRT18TEXT 00000000 00000000	
0xB08F8C42- B08F8C5E	reserved XXXXXXXX 00000000	
0xB08F8C60	RICFG1_FRT19TEXT 00000000 00000000	
0xB08F8C62- B08F903E	reserved XXXXXXXX 00000000	
0xB08F9040	RICFG1_ICU18IN0 00000000 XXXXXXXX	
0xB08F9042	RICFG1_ICU18IN1 00000000 XXXXXXXX	
0xB08F9044	RICFG1_ICU18FRTSEL XXXXXXXX 00000000	
0xB08F9046- B08F905E	reserved XXXXXXXX 00000000	
0xB08F9060	RICFG1_ICU19IN0 00000000 XXXXXXXX	
0xB08F9062	RICFG1_ICU19IN1 00000000 XXXXXXXX	
0xB08F9064	RICFG1_ICU19FRTSEL XXXXXXXX 00000000	
0xB08F9066- B08F93FE	reserved XXXXXXXX 00000000	
0xB08F9400	RICFG1_OCU16OTD0GATE XXXXXXXX 00000000	
0xB08F9402	RICFG1_OCU16OTD0GM XXXXXXXX 00000000	
0xB08F9404	RICFG1_OCU16OTD1GATE XXXXXXXX 00000000	
0xB08F9406	RICFG1_OCU16OTD1GM XXXXXXXX 00000000	
0xB08F9408- B08F941E	reserved XXXXXXXX 00000000	
0xB08F9420	RICFG1_OCU17CMP0EXT XXXXXXXX 00000000	
0xB08F9422	RICFG1_OCU17FRTSEL XXXXXXXX 00000000	
0xB08F9424	RICFG1_OCU17OTD0GATE XXXXXXXX 00000000	
0xB08F9426	RICFG1_OCU17OTD0GM XXXXXXXX 00000000	

Table 40. Memory Layout of PERI1_RBUS Registers (Continued)

Offset	+1	+0
0xB08F9428	RICFG1_OCU17OTD1GATE XXXXXXXX 00000000	
0xB08F942A	RICFG1_OCU17OTD1GM XXXXXXXX 00000000	
0xB08F942C- B08F9BFE	reserved XXXXXXXX 00000000	
0xB08F9C00	RICFG1_USART6SCKI 00000000 XXXXXXXX	
0xB08F9C02	RICFG1_USART6SIN 00000000 XXXXXXXX	
0xB08F9C04- B08FA3FE	reserved XXXXXXXX 00000000	
0xB08FA400	RICFG1_PPG64PPGAGATE XXXXXXXX 00000000	
0xB08FA402	RICFG1_PPG64PPGAGM XXXXXXXX 00000000	
0xB08FA404	RICFG1_PPG64PPGBGATE XXXXXXXX 00000000	
0xB08FA406	RICFG1_PPG64PPGBGM XXXXXXXX 00000000	
0xB08FA408- B08FA41E	reserved XXXXXXXX 00000000	
0xB08FA420	RICFG1_PPG65PPGAGATE XXXXXXXX 00000000	
0xB08FA422	RICFG1_PPG65PPGAGM XXXXXXXX 00000000	
0xB08FA424	RICFG1_PPG65PPGBGATE XXXXXXXX 00000000	
0xB08FA426	RICFG1_PPG65PPGBGM XXXXXXXX 00000000	
0xB08FA428- B08FA43E	reserved XXXXXXXX 00000000	
0xB08FA440	RICFG1_PPG66PPGAGATE XXXXXXXX 00000000	
0xB08FA442	RICFG1_PPG66PPGAGM XXXXXXXX 00000000	
0xB08FA444	RICFG1_PPG66PPGBGATE XXXXXXXX 00000000	
0xB08FA446	RICFG1_PPG66PPGBGM XXXXXXXX 00000000	
0xB08FA448- B08FA45E	reserved XXXXXXXX 00000000	
0xB08FA460	RICFG1_PPG67PPGAGATE XXXXXXXX 00000000	
0xB08FA462	RICFG1_PPG67PPGAGM XXXXXXXX 00000000	
0xB08FA464	RICFG1_PPG67PPGBGATE XXXXXXXX 00000000	
0xB08FA466	RICFG1_PPG67PPGBGM XXXXXXXX 00000000	
0xB08FA468- B08FA47E	reserved XXXXXXXX 00000000	

Table 40. Memory Layout of PERI1_RBUS Registers (Continued)

Offset	+1	+0
0xB08FA480	RICFG1_PPG68PPGAGATE XXXXXXXX 00000000	
0xB08FA482	RICFG1_PPG68PPGAGM XXXXXXXX 00000000	
0xB08FA484	RICFG1_PPG68PPGBGATE XXXXXXXX 00000000	
0xB08FA486	RICFG1_PPG68PPGBGM XXXXXXXX 00000000	
0xB08FA488- B08FA49E	reserved XXXXXXXX 00000000	
0xB08FA4A0	RICFG1_PPG69PPGAGATE XXXXXXXX 00000000	
0xB08FA4A2	RICFG1_PPG69PPGAGM XXXXXXXX 00000000	
0xB08FA4A4	RICFG1_PPG69PPGBGATE XXXXXXXX 00000000	
0xB08FA4A6	RICFG1_PPG69PPGBGM XXXXXXXX 00000000	
0xB08FA4A8- B08FA4BE	reserved XXXXXXXX 00000000	
0xB08FA4C0	RICFG1_PPG70PPGAGATE XXXXXXXX 00000000	
0xB08FA4C2	RICFG1_PPG70PPGAGM XXXXXXXX 00000000	
0xB08FA4C4	RICFG1_PPG70PPGBGATE XXXXXXXX 00000000	
0xB08FA4C6	RICFG1_PPG70PPGBGM XXXXXXXX 00000000	
0xB08FA4C8- B08FA4DE	reserved XXXXXXXX 00000000	
0xB08FA4E0	RICFG1_PPG71PPGAGATE XXXXXXXX 00000000	
0xB08FA4E2	RICFG1_PPG71PPGAGM XXXXXXXX 00000000	
0xB08FA4E4	RICFG1_PPG71PPGBGATE XXXXXXXX 00000000	
0xB08FA4E6	RICFG1_PPG71PPGBGM XXXXXXXX 00000000	
0xB08FA4E8- B08FABFE	reserved XXXXXXXX 00000000	
0xB08FAC00	RICFG1_PPGGRP16ETRG0 XXXXXXXX 00000000	
0xB08FAC02	RICFG1_PPGGRP16ETRG1 XXXXXXXX 00000000	
0xB08FAC04	RICFG1_PPGGRP16ETRG2 XXXXXXXX 00000000	
0xB08FAC06	RICFG1_PPGGRP16ETRG3 XXXXXXXX 00000000	
0xB08FAC08	RICFG1_PPGGRP16RLTTRG1 XXXXXXXX 00000000	
0xB08FAC0A- B08FAC1E	reserved XXXXXXXX XXXXXXXX	

Table 40. Memory Layout of PERI1_RBUS Registers (Continued)

Offset	+1	+0
0xB08FAC20	RICFG1_PPGGRP17ETRG0 XXXXXXXX 00000000	
0xB08FAC22	RICFG1_PPGGRP17ETRG1 XXXXXXXX 00000000	
0xB08FAC24	RICFG1_PPGGRP17ETRG2 XXXXXXXX 00000000	
0xB08FAC26	RICFG1_PPGGRP17ETRG3 XXXXXXXX 00000000	
0xB08FAC28	RICFG1_PPGGRP17RLTTRG1 XXXXXXXX 00000000	
0xB08FAC2A- B08FFC02	reserved XXXXXXXX XXXXXXXX	
0xB08FFC04	BSU1_BTSTL 00000000 00000000	
0xB08FFC06	BSU1_BTSTH 00000000 00000000	
0xB08FFC08- B08FFC0E	reserved XXXXXXXX XXXXXXXX	
0xB08FFC10	BSU1_PEN0L XXXXXXXX 00000000	
0xB08FFC12	reserved XXXXXXXX XXXXXXXX	
0xB08FFC14	BSU1_PEN1L XXXXXXXX 00000000	
0xB08FFC16	reserved XXXXXXXX XXXXXXXX	
0xB08FFC18	BSU1_PEN2L XXXXXXXX 00000000	
0xB08FFC1A	reserved XXXXXXXX XXXXXXXX	
0xB08FFC1C	BSU1_PEN3L 00000000 00000000	
0xB08FFC1E	reserved XXXXXXXX XXXXXXXX	
0xB08FFC20	BSU1_PEN4L 00000000 00000000	
0xB08FFC22	reserved XXXXXXXX XXXXXXXX	
0xB08FFC24	BSU1_PEN5L 00000000 00000000	
0xB08FFC26	reserved XXXXXXXX XXXXXXXX	
0xB08FFC28	BSU1_PEN6L XXXXXXXX 00000000	
0xB08FFC2A	reserved XXXXXXXX XXXXXXXX	
0xB08FFC2C	BSU1_PEN7L XXXXXXXX 00000000	
0xB08FFC2E	reserved XXXXXXXX XXXXXXXX	
0xB08FFC30	BSU1_PEN8L XXXXXXXX 00000000	

Table 40. Memory Layout of PERI1_RBUS Registers (Continued)

Offset	+1	+0
0xB08FFC32	reserved XXXXXXXX XXXXXXXX	
0xB08FFC34	BSU1_PEN9L 00000000 00000000	
0xB08FFC36	BSU1_PEN9H 00000000 00000000	
0xB08FFC38	BSU1_PEN10L 00000000 00000000	
0xB08FFC3A	BSU1_PEN10H 00000000 00000000	
0xB08FFC3C	BSU1_PEN11L 00000000 00000000	
0xB08FFC3E	BSU1_PEN11H XXXXXXXX 00000000	
0xB08FFC40- B09FFFFE	reserved XXXXXXXX XXXXXXXX	

Table 41. Memory Layout of the PERI3_ERBUS Registers

Offset	+7	+6	+5	+4	+3	+2	+1	+0
0xB0A00000	reserved XXXXXXXX XXXXXXXX XXXXXXXX XXXXXXXX				reserved XXXXXXXX XXXXXXXX XXXXXXXX XXXXXXXX			
0xB0A00008	PPU0_PRS3 00000000 00000000 00000000 00000000				PPU0_PRS2 00000000 00000000 00000000 00000000			
0xB0A00010	PPU0_PRS5 00000000 00000000 00000000 00000000				PPU0_PRS4 00000000 00000000 00000000 00000000			
0xB0A00018	PPU0_PRS7 00000000 00000000 00000000 00000000				PPU0_PRS6 00000000 00000000 00000000 00000000			
0xB0A00020	PPU0_PRS9 00000000 00000000 00000000 00000000				PPU0_PRS8 00000000 00000000 00000000 00000000			
0xB0A00028	PPU0_PRS11 00000000 00000000 00000000 00000000				PPU0_PRS10 00000000 00000000 00000000 00000000			
0xB0A00030	PPU0_PRS13 00000000 00000000 00000000 00000000				PPU0_PRS12 00000000 00000000 00000000 00000000			
0xB0A00038- B0A00040	reserved XXXXXXXX XXXXXXXX XXXXXXXX XXXXXXXX XXXXXXXX XXXXXXXX XXXXXXXX XXXXXXXX							
0xB0A00048	PPU0_PAS3 00000000 00000000 00000000 00000000				PPU0_PAS2 00000000 00000000 00000000 00000000			
0xB0A00050	PPU0_PAS5 00000000 00000000 00000000 00000000				PPU0_PAS4 00000000 00000000 00000000 00000000			
0xB0A00058	PPU0_PAS7 00000000 00000000 00000000 00000000				PPU0_PAS6 00000000 00000000 00000000 00000000			
0xB0A00060	PPU0_PAS9 00000000 00000000 00000000 00000000				PPU0_PAS8 00000000 00000000 00000000 00000000			
0xB0A00068	PPU0_PAS11 00000000 00000000 00000000 00000000				PPU0_PAS10 00000000 00000000 00000000 00000000			
0xB0A00070	PPU0_PAS13 00000000 00000000 00000000 00000000				PPU0_PAS12 00000000 00000000 00000000 00000000			
0xB0A00078	reserved XXXXXXXX XXXXXXXX XXXXXXXX XXXXXXXX				reserved XXXXXXXX XXXXXXXX XXXXXXXX XXXXXXXX			

Table 41. Memory Layout of the PERI3_ERBUS Registers (Continued)

Offset	+7	+6	+5	+4	+3	+2	+1	+0
0xB0A00080	PPU0_GAS1 00000000 00000000 00000000 00000000				reserved XXXXXXXX XXXXXXXX XXXXXXXX XXXXXXXX			
0xB0A00088	PPU0_GAS3 00000000 00000000 00000000 00000000				PPU0_GAS2 00000000 00000000 00000000 00000000			
0xB0A00090	PPU0_GAS5 00000000 00000000 00000000 00000000				reserved XXXXXXXX XXXXXXXX XXXXXXXX XXXXXXXX			
0xB0A00098	PPU0_GAS7 00000000 00000000 00000000 00000000				PPU0_GAS6 00000000 00000000 00000000 00000000			
0xB0A000A0	reserved XXXXXXXX XXXXXXXX XXXXXXXX XXXXXXXX				reserved XXXXXXXX XXXXXXXX XXXXXXXX XXXXXXXX			
0xB0A000A8	reserved XXXXXXXX XXXXXXXX XXXXXXXX XXXXXXXX				reserved XXXXXXXX XXXXXXXX XXXXXXXX XXXXXXXX			
0xB0A000B0	reserved XXXXXXXX XXXXXXXX XXXXXXXX XXXXXXXX				reserved XXXXXXXX XXXXXXXX XXXXXXXX XXXXXXXX			
0xB0A000B8	reserved XXXXXXXX XXXXXXXX XXXXXXXX XXXXXXXX				reserved XXXXXXXX XXXXXXXX XXXXXXXX XXXXXXXX			
0xB0A000C0	reserved XXXXXXXX XXXXXXXX XXXXXXXX XXXXXXXX				reserved XXXXXXXX XXXXXXXX XXXXXXXX XXXXXXXX			
0xB0A000C8	PPU0_PRC3 00000000 00000000 00000000 00000000				PPU0_PRC2 00000000 00000000 00000000 00000000			
0xB0A000D0	PPU0_PRC5 00000000 00000000 00000000 00000000				PPU0_PRC4 00000000 00000000 00000000 00000000			
0xB0A000D8	PPU0_PRC7 00000000 00000000 00000000 00000000				PPU0_PRC6 00000000 00000000 00000000 00000000			
0xB0A000E0	PPU0_PRC9 00000000 00000000 00000000 00000000				PPU0_PRC8 00000000 00000000 00000000 00000000			
0xB0A000E8	PPU0_PRC11 00000000 00000000 00000000 00000000				PPU0_PRC10 00000000 00000000 00000000 00000000			
0xB0A000F0	PPU0_PRC13 00000000 00000000 00000000 00000000				PPU0_PRC12 00000000 00000000 00000000 00000000			
0xB0A000F8	reserved XXXXXXXX XXXXXXXX XXXXXXXX XXXXXXXX				reserved XXXXXXXX XXXXXXXX XXXXXXXX XXXXXXXX			
0xB0A00100	reserved XXXXXXXX XXXXXXXX XXXXXXXX XXXXXXXX				reserved XXXXXXXX XXXXXXXX XXXXXXXX XXXXXXXX			
0xB0A00108	PPU0_PAC3 00000000 00000000 00000000 00000000				PPU0_PAC2 00000000 00000000 00000000 00000000			
0xB0A00110	PPU0_PAC5 00000000 00000000 00000000 00000000				PPU0_PAC4 00000000 00000000 00000000 00000000			
0xB0A00118	PPU0_PAC7 00000000 00000000 00000000 00000000				PPU0_PAC6 00000000 00000000 00000000 00000000			
0xB0A00120	PPU0_PAC9 00000000 00000000 00000000 00000000				PPU0_PAC8 00000000 00000000 00000000 00000000			
0xB0A00128	PPU0_PAC11 00000000 00000000 00000000 00000000				PPU0_PAC10 00000000 00000000 00000000 00000000			
0xB0A00130	PPU0_PAC13 00000000 00000000 00000000 00000000				PPU0_PAC12 00000000 00000000 00000000 00000000			
0xB0A00138	reserved XXXXXXXX XXXXXXXX XXXXXXXX XXXXXXXX				reserved XXXXXXXX XXXXXXXX XXXXXXXX XXXXXXXX			
0xB0A00140	PPU0_GAC1 00000000 00000000 00000000 00000000				reserved XXXXXXXX XXXXXXXX XXXXXXXX XXXXXXXX			

Table 41. Memory Layout of the PERI3_ERBUS Registers (Continued)

Offset	+7	+6	+5	+4	+3	+2	+1	+0
0xB0A00148	PPU0_GAC3 00000000 00000000 00000000 00000000				PPU0_GAC2 00000000 00000000 00000000 00000000			
0xB0A00150	PPU0_GAC5 00000000 00000000 00000000 00000000				reserved XXXXXXXX XXXXXXXX XXXXXXXX XXXXXXXX			
0xB0A00158	PPU0_GAC7 00000000 00000000 00000000 00000000				PPU0_GAC6 00000000 00000000 00000000 00000000			
0xB0A00160	reserved XXXXXXXX XXXXXXXX XXXXXXXX XXXXXXXX				reserved XXXXXXXX XXXXXXXX XXXXXXXX XXXXXXXX			
0xB0A00168	reserved XXXXXXXX XXXXXXXX XXXXXXXX XXXXXXXX				reserved XXXXXXXX XXXXXXXX XXXXXXXX XXXXXXXX			
0xB0A00170	reserved XXXXXXXX XXXXXXXX XXXXXXXX XXXXXXXX				reserved XXXXXXXX XXXXXXXX XXXXXXXX XXXXXXXX			
0xB0A00178	reserved XXXXXXXX XXXXXXXX XXXXXXXX XXXXXXXX				reserved XXXXXXXX XXXXXXXX XXXXXXXX XXXXXXXX			
0xB0A00180	reserved XXXXXXXX XXXXXXXX XXXXXXXX XXXXXXXX				reserved XXXXXXXX XXXXXXXX XXXXXXXX XXXXXXXX			
0xB0A00188	PPU0_PR3 00000000 00000000 00000000 00000000				PPU0_PR2 00000000 00000000 00000000 00000000			
0xB0A00190	PPU0_PR5 00000000 00000000 00000000 00000000				PPU0_PR4 00000000 00000000 00000000 00000000			
0xB0A00198	PPU0_PR7 00000000 00000000 00000000 00000000				PPU0_PR6 00000000 00000000 00000000 00000000			
0xB0A001A0	PPU0_PR9 00000000 00000000 00000000 00000000				PPU0_PR8 00000000 00000000 00000000 00000000			
0xB0A001A8	PPU0_PR11 00000000 00000000 00000000 00000000				PPU0_PR10 00000000 00000000 00000000 00000000			
0xB0A001B0	PPU0_PR13 00000000 00000000 00000000 00000000				PPU0_PR12 00000000 00000000 00000000 00000000			
0xB0A001B8	reserved XXXXXXXX XXXXXXXX XXXXXXXX XXXXXXXX				reserved XXXXXXXX XXXXXXXX XXXXXXXX XXXXXXXX			
0xB0A001C0	reserved XXXXXXXX XXXXXXXX XXXXXXXX XXXXXXXX				reserved XXXXXXXX XXXXXXXX XXXXXXXX XXXXXXXX			
0xB0A001C8	PPU0_PA3 00000000 00000000 00000000 00000000				PPU0_PA2 00000000 00000000 00000000 00000000			
0xB0A001D0	PPU0_PA5 00000000 00000000 00000000 00000000				PPU0_PA4 00000000 00000000 00000000 00000000			
0xB0A001D8	PPU0_PA7 00000000 00000000 00000000 00000000				PPU0_PA6 00000000 00000000 00000000 00000000			
0xB0A001E0	PPU0_PA9 00000000 00000000 00000000 00000000				PPU0_PA8 00000000 00000000 00000000 00000000			
0xB0A001E8	PPU0_PA11 00000000 00000000 00000000 00000000				PPU0_PA10 00000000 00000000 00000000 00000000			
0xB0A001F0	PPU0_PA13 00000000 00000000 00000000 00000000				PPU0_PA12 00000000 00000000 00000000 00000000			
0xB0A001F8	reserved XXXXXXXX XXXXXXXX XXXXXXXX XXXXXXXX				reserved XXXXXXXX XXXXXXXX XXXXXXXX XXXXXXXX			
0xB0A00200	PPU0_GA1 00000000 00000000 00000000 00000000				reserved XXXXXXXX XXXXXXXX XXXXXXXX XXXXXXXX			
0xB0A00208	PPU0_GA3 00000000 00000000 00000000 00000000				PPU0_GA2 00000000 00000000 00000000 00000000			

Table 41. Memory Layout of the PERI3_ERBUS Registers (Continued)

Offset	+7	+6	+5	+4	+3	+2	+1	+0
0xB0A00210	PPU0_GA5 00000000 00000000 00000000 00000000				reserved XXXXXXXX XXXXXXXX XXXXXXXX XXXXXXXX			
0xB0A00218	PPU0_GA7 00000000 00000000 00000000 00000000				PPU0_GA6 00000000 00000000 00000000 00000000			
0xB0A00220	reserved XXXXXXXX XXXXXXXX XXXXXXXX XXXXXXXX				reserved XXXXXXXX XXXXXXXX XXXXXXXX XXXXXXXX			
0xB0A00228	reserved XXXXXXXX XXXXXXXX XXXXXXXX XXXXXXXX				reserved XXXXXXXX XXXXXXXX XXXXXXXX XXXXXXXX			
0xB0A00230	reserved XXXXXXXX XXXXXXXX XXXXXXXX XXXXXXXX				reserved XXXXXXXX XXXXXXXX XXXXXXXX XXXXXXXX			
0xB0A00238	reserved XXXXXXXX XXXXXXXX XXXXXXXX XXXXXXXX				reserved XXXXXXXX XXXXXXXX XXXXXXXX XXXXXXXX			
0xB0A00240	reserved XXXXXXXX XXXXXXXX XXXXXXXX XXXXXXXX				PPU0_UNLOCK 00000000 00000000 00000000 00000000			
0xB0A00248	PPU0_CTR XXXXXXXX 00000001 00000000 00000000				PPU0_ST XXXXXXXX XXXXXXXX 00000001 00000001			
0xB0A00250- B0A07FF8	reserved XXXXXXXX XXXXXXXX XXXXXXXX XXXXXXXX XXXXXXXX XXXXXXXX XXXXXXXX XXXXXXXX							
0xB0A08000	GPIO_POSR0 00000000 00000000 00000000 00000000 00000000 00000000 00000000 00000000							
0xB0A08008	GPIO_POCR0 00000000 00000000 00000000 00000000 00000000 00000000 00000000 00000000							
0xB0A08010	GPIO_DDSR0 00000000 00000000 00000000 00000000 00000000 00000000 00000000 00000000							
0xB0A08018	GPIO_DDCR0 00000000 00000000 00000000 00000000 00000000 00000000 00000000 00000000							
0xB0A08020	GPIO_POSR1 00000000 00000000 00000000 00000000 00000000 00000000 00000000 00000000							
0xB0A08028	GPIO_POCR1 00000000 00000000 00000000 00000000 00000000 00000000 00000000 00000000							
0xB0A08030	GPIO_DDSR1 00000000 00000000 00000000 00000000 00000000 00000000 00000000 00000000							
0xB0A08038	GPIO_DDCR1 00000000 00000000 00000000 00000000 00000000 00000000 00000000 00000000							
0xB0A08040	GPIO_POSR2 00000000 00000000 00000000 00000000 00000000 00000000 00000000 00000000							
0xB0A08048	GPIO_POCR2 00000000 00000000 00000000 00000000 00000000 00000000 00000000 00000000							
0xB0A08050	GPIO_DDSR2 00000000 00000000 00000000 00000000 00000000 00000000 00000000 00000000							
0xB0A08058	GPIO_DDCR2 00000000 00000000 00000000 00000000 00000000 00000000 00000000 00000000							
0xB0A08060	GPIO_POSR3 00000000 00000000 00000000 00000000 00000000 00000000 00000000 00000000							
0xB0A08068	GPIO_POCR3 00000000 00000000 00000000 00000000 00000000 00000000 00000000 00000000							
0xB0A08070	GPIO_DDSR3 00000000 00000000 00000000 00000000 00000000 00000000 00000000 00000000							
0xB0A08078	GPIO_DDCR3 00000000 00000000 00000000 00000000 00000000 00000000 00000000 00000000							
0xB0A08080	GPIO_POSR4 00000000 00000000 00000000 00000000 00000000 00000000 00000000 00000000							

Table 41. Memory Layout of the PERI3_ERBUS Registers (Continued)

Offset	+7	+6	+5	+4	+3	+2	+1	+0
0xB0A08088	GPIO_POCR4 00000000 00000000 00000000 00000000 00000000 00000000 00000000 00000000							
0xB0A08090	GPIO_DDSR4 00000000 00000000 00000000 00000000 00000000 00000000 00000000 00000000							
0xB0A08098	GPIO_DDCR4 00000000 00000000 00000000 00000000 00000000 00000000 00000000 00000000							
0xB0A080A0	GPIO_POSR5 00000000 00000000 00000000 00000000 00000000 00000000 00000000 00000000							
0xB0A080A8	GPIO_POCR5 00000000 00000000 00000000 00000000 00000000 00000000 00000000 00000000							
0xB0A080B0	GPIO_DDSR5 00000000 00000000 00000000 00000000 00000000 00000000 00000000 00000000							
0xB0A080B8	GPIO_DDCR5 00000000 00000000 00000000 00000000 00000000 00000000 00000000 00000000							
0xB0A080C0	GPIO_POSR6 00000000 00000000 00000000 00000000 00000000 00000000 00000000 00000000							
0xB0A080C8	GPIO_POCR6 00000000 00000000 00000000 00000000 00000000 00000000 00000000 00000000							
0xB0A080D0	GPIO_DDSR6 00000000 00000000 00000000 00000000 00000000 00000000 00000000 00000000							
0xB0A080D8	GPIO_DDCR6 00000000 00000000 00000000 00000000 00000000 00000000 00000000 00000000							
0xB0A080E0	GPIO_POSR7 00000000 00000000 00000000 00000000 00000000 00000000 00000000 00000000							
0xB0A080E8	GPIO_POCR7 00000000 00000000 00000000 00000000 00000000 00000000 00000000 00000000							
0xB0A080F0	GPIO_DDSR7 00000000 00000000 00000000 00000000 00000000 00000000 00000000 00000000							
0xB0A080F8	GPIO_DDCR7 00000000 00000000 00000000 00000000 00000000 00000000 00000000 00000000							
0xB0A08100- B0A081F8	reserved XXXXXXXX XXXXXXXX XXXXXXXX XXXXXXXX XXXXXXXX XXXXXXXX XXXXXXXX XXXXXXXX							
0xB0A08200	GPIO_PODR0 00000000 00000000 00000000 00000000 00000000 00000000 00000000 00000000							
0xB0A08208	GPIO_DDR0 00000000 00000000 00000000 00000000 00000000 00000000 00000000 00000000							
0xB0A08210	GPIO_PODR1 00000000 00000000 00000000 00000000 00000000 00000000 00000000 00000000							
0xB0A08218	GPIO_DDR1 00000000 00000000 00000000 00000000 00000000 00000000 00000000 00000000							
0xB0A08220	GPIO_PODR2 00000000 00000000 00000000 00000000 00000000 00000000 00000000 00000000							
0xB0A08228	GPIO_DDR2 00000000 00000000 00000000 00000000 00000000 00000000 00000000 00000000							
0xB0A08230	GPIO_PODR3 00000000 00000000 00000000 00000000 00000000 00000000 00000000 00000000							
0xB0A08238	GPIO_DDR3 00000000 00000000 00000000 00000000 00000000 00000000 00000000 00000000							
0xB0A08240	GPIO_PODR4 00000000 00000000 00000000 00000000 00000000 00000000 00000000 00000000							
0xB0A08248	GPIO_DDR4 00000000 00000000 00000000 00000000 00000000 00000000 00000000 00000000							

Table 41. Memory Layout of the PERI3_ERBUS Registers (Continued)

Offset	+7	+6	+5	+4	+3	+2	+1	+0
0xB0A08250	GPIO_PODR5 00000000 00000000 00000000 00000000 00000000 00000000 00000000 00000000							
0xB0A08258	GPIO_DDR5 00000000 00000000 00000000 00000000 00000000 00000000 00000000 00000000							
0xB0A08260	GPIO_PODR6 00000000 00000000 00000000 00000000 00000000 00000000 00000000 00000000							
0xB0A08268	GPIO_DDR6 00000000 00000000 00000000 00000000 00000000 00000000 00000000 00000000							
0xB0A08270	GPIO_PODR7 00000000 00000000 00000000 00000000 00000000 00000000 00000000 00000000							
0xB0A08278	GPIO_DDR7 00000000 00000000 00000000 00000000 00000000 00000000 00000000 00000000							
0xB0A08280- B0A082F8	reserved XXXXXXXX XXXXXXXX XXXXXXXX XXXXXXXX XXXXXXXX XXXXXXXX XXXXXXXX XXXXXXXX							
0xB0A08300	GPIO_PIDR0 XXXXXXXX XXXXXXXX XXXXXXXX XXXXXXXX XXXXXXXX XXXXXXXX XXXXXXXX XXXXXXXX							
0xB0A08308	GPIO_PIDR1 XXXXXXXX XXXXXXXX XXXXXXXX XXXXXXXX XXXXXXXX XXXXXXXX XXXXXXXX XXXXXXXX							
0xB0A08310	GPIO_PIDR2 XXXXXXXX XXXXXXXX XXXXXXXX XXXXXXXX XXXXXXXX XXXXXXXX XXXXXXXX XXXXXXXX							
0xB0A08318	GPIO_PIDR3 XXXXXXXX XXXXXXXX XXXXXXXX XXXXXXXX XXXXXXXX XXXXXXXX XXXXXXXX XXXXXXXX							
0xB0A08320	GPIO_PIDR4 XXXXXXXX XXXXXXXX XXXXXXXX XXXXXXXX XXXXXXXX XXXXXXXX XXXXXXXX XXXXXXXX							
0xB0A08328	GPIO_PIDR5 XXXXXXXX XXXXXXXX XXXXXXXX XXXXXXXX XXXXXXXX XXXXXXXX XXXXXXXX XXXXXXXX							
0xB0A08330	GPIO_PIDR6 XXXXXXXX XXXXXXXX XXXXXXXX XXXXXXXX XXXXXXXX XXXXXXXX XXXXXXXX XXXXXXXX							
0xB0A08338	GPIO_PIDR7 XXXXXXXX XXXXXXXX XXXXXXXX XXXXXXXX XXXXXXXX XXXXXXXX XXXXXXXX XXXXXXXX							
0xB0A08340- B0A08378	reserved XXXXXXXX XXXXXXXX XXXXXXXX XXXXXXXX XXXXXXXX XXXXXXXX XXXXXXXX XXXXXXXX							
0xB0A08380	GPIO_PPER0 00000000 00000000 00000000 00000000 00000000 00000000 00000000 00000000							
0xB0A08388	GPIO_PPER1 00000000 00000000 00000000 00000000 00000000 00000000 00000000 00000000							
0xB0A08390	GPIO_PPER2 00000000 00000000 00000000 00000000 00000000 00000000 00000000 00000000							
0xB0A08398	GPIO_PPER3 00000000 00000000 00000000 00000000 00000000 00000000 00000000 00000000							
0xB0A083A0	GPIO_PPER4 00000000 00000000 00000000 00000000 00000000 00000000 00000000 00000000							
0xB0A083A8	GPIO_PPER5 00000000 00000000 00000000 00000000 00000000 00000000 00000000 00000000							
0xB0A083B0	GPIO_PPER6 00000000 00000000 00000000 00000000 00000000 00000000 00000000 00000000							
0xB0A083B8	GPIO_PPER7 00000000 00000000 00000000 00000000 00000000 00000000 00000000 00000000							
0xB0A083C0- B0A0FFF8	reserved XXXXXXXX XXXXXXXX XXXXXXXX XXXXXXXX XXXXXXXX XXXXXXXX XXXXXXXX 0000000X							
0xB0A10000	reserved XXXXXXXX XXXXXXXX XXXXXXXX XXXXXXXX				RLT0_DMACFG XXXXXXXX XXXXXXXX XXXXXXXX 00000000			

Table 41. Memory Layout of the PERI3_ERBUS Registers (Continued)

Offset	+7	+6	+5	+4	+3	+2	+1	+0
0xB0A10008	reserved XXXXXXXX XXXXXXXX XXXXXXXX XXXXXXXX				RLT0_TMCSR 00000000 00000000 00000000 00000000			
0xB0A10010	RLT0_TMR XXXXXXXX XXXXXXXX XXXXXXXX XXXXXXXX				RLT0_TMRLR XXXXXXXX XXXXXXXX XXXXXXXX XXXXXXXX			
0xB0A10018- B0A103F8	reserved XXXXXXXX XXXXXXXX XXXXXXXX XXXXXXXX XXXXXXXX XXXXXXXX XXXXXXXX XXXXXXXX							
0xB0A10400	reserved XXXXXXXX XXXXXXXX XXXXXXXX XXXXXXXX				RLT1_DMACFG XXXXXXXX XXXXXXXX XXXXXXXX 00000000			
0xB0A10408	reserved XXXXXXXX XXXXXXXX XXXXXXXX XXXXXXXX				RLT1_TMCSR 00000000 00000000 00000000 00000000			
0xB0A10410	RLT1_TMR XXXXXXXX XXXXXXXX XXXXXXXX XXXXXXXX				RLT1_TMRLR XXXXXXXX XXXXXXXX XXXXXXXX XXXXXXXX			
0xB0A10418- B0A107F8	reserved XXXXXXXX XXXXXXXX XXXXXXXX XXXXXXXX XXXXXXXX XXXXXXXX XXXXXXXX 0000000X							
0xB0A10800	reserved XXXXXXXX XXXXXXXX XXXXXXXX XXXXXXXX				RLT2_DMACFG XXXXXXXX XXXXXXXX XXXXXXXX 00000000			
0xB0A10808	reserved XXXXXXXX XXXXXXXX XXXXXXXX XXXXXXXX				RLT2_TMCSR 00000000 00000000 00000000 00000000			
0xB0A10810	RLT2_TMR XXXXXXXX XXXXXXXX XXXXXXXX XXXXXXXX				RLT2_TMRLR XXXXXXXX XXXXXXXX XXXXXXXX XXXXXXXX			
0xB0A10818- B0A10BF8	reserved XXXXXXXX XXXXXXXX XXXXXXXX XXXXXXXX XXXXXXXX XXXXXXXX XXXXXXXX 0000000X							
0xB0A10C00	reserved XXXXXXXX XXXXXXXX XXXXXXXX XXXXXXXX				RLT3_DMACFG XXXXXXXX XXXXXXXX XXXXXXXX 00000000			
0xB0A10C08	reserved XXXXXXXX XXXXXXXX XXXXXXXX XXXXXXXX				RLT3_TMCSR 00000000 00000000 00000000 00000000			
0xB0A10C10	RLT3_TMR XXXXXXXX XXXXXXXX XXXXXXXX XXXXXXXX				RLT3_TMRLR XXXXXXXX XXXXXXXX XXXXXXXX XXXXXXXX			
0xB0A10C18- B0A10FF8	reserved XXXXXXXX XXXXXXXX XXXXXXXX XXXXXXXX XXXXXXXX XXXXXXXX XXXXXXXX XXXXXXXX							
0xB0A11000	reserved XXXXXXXX XXXXXXXX XXXXXXXX XXXXXXXX				RLT4_DMACFG XXXXXXXX XXXXXXXX XXXXXXXX 00000000			
0xB0A11008	reserved XXXXXXXX XXXXXXXX XXXXXXXX XXXXXXXX				RLT4_TMCSR 00000000 00000000 00000000 00000000			
0xB0A11010	RLT4_TMR XXXXXXXX XXXXXXXX XXXXXXXX XXXXXXXX				RLT4_TMRLR XXXXXXXX XXXXXXXX XXXXXXXX XXXXXXXX			
0xB0A11018- B0A113F8	reserved XXXXXXXX XXXXXXXX XXXXXXXX XXXXXXXX XXXXXXXX XXXXXXXX XXXXXXXX XXXXXXXX							
0xB0A11400	reserved XXXXXXXX XXXXXXXX XXXXXXXX XXXXXXXX				RLT5_DMACFG XXXXXXXX XXXXXXXX XXXXXXXX 00000000			
0xB0A11408	reserved XXXXXXXX XXXXXXXX XXXXXXXX XXXXXXXX				RLT5_TMCSR 00000000 00000000 00000000 00000000			
0xB0A11410	RLT5_TMR XXXXXXXX XXXXXXXX XXXXXXXX XXXXXXXX				RLT5_TMRLR XXXXXXXX XXXXXXXX XXXXXXXX XXXXXXXX			
0xB0A11418- B0A117F8	reserved XXXXXXXX XXXXXXXX XXXXXXXX XXXXXXXX XXXXXXXX XXXXXXXX XXXXXXXX XXXXXXXX							
0xB0A11800	reserved XXXXXXXX XXXXXXXX XXXXXXXX XXXXXXXX				RLT6_DMACFG XXXXXXXX XXXXXXXX XXXXXXXX 00000000			
0xB0A11808	reserved XXXXXXXX XXXXXXXX XXXXXXXX XXXXXXXX				RLT6_TMCSR 00000000 00000000 00000000 00000000			

Table 41. Memory Layout of the PERI3_ERBUS Registers (Continued)

Offset	+7	+6	+5	+4	+3	+2	+1	+0
0xB0A11810	RLT6_TMR XXXXXXXX XXXXXXXX XXXXXXXX XXXXXXXX				RLT6_TMRLR XXXXXXXX XXXXXXXX XXXXXXXX XXXXXXXX			
0xB0A11818- B0A11BF8	reserved XXXXXXXX XXXXXXXX XXXXXXXX XXXXXXXX XXXXXXXX XXXXXXXX XXXXXXXX XXXXXXXX							
0xB0A11C00	reserved XXXXXXXX XXXXXXXX XXXXXXXX XXXXXXXX				RLT7_DMACFG XXXXXXXX XXXXXXXX XXXXXXXX 00000000			
0xB0A11C08	reserved XXXXXXXX XXXXXXXX XXXXXXXX XXXXXXXX				RLT7_TMCSR 00000000 00000000 00000000 00000000			
0xB0A11C10	RLT7_TMR XXXXXXXX XXXXXXXX XXXXXXXX XXXXXXXX				RLT7_TMRLR XXXXXXXX XXXXXXXX XXXXXXXX XXXXXXXX			
0xB0A11C18- B0A11FF8	reserved XXXXXXXX XXXXXXXX XXXXXXXX XXXXXXXX XXXXXXXX XXXXXXXX XXXXXXXX XXXXXXXX							
0xB0A12000	reserved XXXXXXXX XXXXXXXX XXXXXXXX XXXXXXXX				RLT8_DMACFG XXXXXXXX XXXXXXXX XXXXXXXX 00000000			
0xB0A12008	reserved XXXXXXXX XXXXXXXX XXXXXXXX XXXXXXXX				RLT8_TMCSR 00000000 00000000 00000000 00000000			
0xB0A12010	RLT8_TMR XXXXXXXX XXXXXXXX XXXXXXXX XXXXXXXX				RLT8_TMRLR XXXXXXXX XXXXXXXX XXXXXXXX XXXXXXXX			
0xB0A12018- B0A123F8	reserved XXXXXXXX XXXXXXXX XXXXXXXX XXXXXXXX XXXXXXXX XXXXXXXX XXXXXXXX XXXXXXXX							
0xB0A12400	reserved XXXXXXXX XXXXXXXX XXXXXXXX XXXXXXXX				RLT9_DMACFG XXXXXXXX XXXXXXXX XXXXXXXX 00000000			
0xB0A12408	reserved XXXXXXXX XXXXXXXX XXXXXXXX XXXXXXXX				RLT9_TMCSR 00000000 00000000 00000000 00000000			
0xB0A12410	RLT9_TMR XXXXXXXX XXXXXXXX XXXXXXXX XXXXXXXX				RLT9_TMRLR XXXXXXXX XXXXXXXX XXXXXXXX XXXXXXXX			
0xB0A12418- B0A1FFF8	reserved XXXXXXXX XXXXXXXX XXXXXXXX XXXXXXXX XXXXXXXX XXXXXXXX XXXXXXXX XXXXXXXX							
0xB0A20000	UDC0_ECC1 XXXXXXXX 00000000		UDC0_CC1 00000000 00000000		UDC0_ECC0 XXXXXXXX 00000000		UDC0_CC0 00000000 00000000	
0xB0A20008	UDC0_TGL1 00000000 00000000		UDC0_TGL0 00000000 00000000		UDC0_CS1 00000000 00000000		UDC0_CS0 00000000 00000000	
0xB0A20010	UDC0_RC 00000000 00000000 00000000 00000000				UDC0_CR 00000000 00000000 00000000 00000000			
0xB0A20018	reserved XXXXXXXX XXXXXXXX XXXXXXXX XXXXXXXX				reserved XXXXXXXX XXXXXXXX		UDC0_DBG XXXXXXXX 00000000	
0xB0A20020- B0AEFFF8	reserved XXXXXXXX XXXXXXXX XXXXXXXX XXXXXXXX XXXXXXXX XXXXXXXX XXXXXXXX XXXXXXXX							
0xB0AF0000	BECU3_ADDRH 00000000 00000000		BECU3_ADDRL 00000000 00000000		BECU3_CTRH 00000000 00000000		BECU3_CTRL 00000000 00000000	
0xB0AF0008	BECU3_DATAHH 00000000 00000000		BECU3_DATAHL 00000000 00000000		BECU3_DATALH 00000000 00000000		BECU3_DATALL 00000000 00000000	
0xB0AF0010	reserved 00000000 00000000		BECU3_MIDH XXXXXXXX XXXXXXXX		BECU3_MIDL XXXXXXXX XXXXXXXX		BECU3_MASTERID 00000000 00000000	
0xB0AF0018	reserved 00000000 00000000		reserved 00000000 00000000		reserved 00000000 00000000		BECU3_NMIEN XXXXXXXX 00000001	
0xB0AF0020- B0AF87F8	reserved XXXXXXXX XXXXXXXX XXXXXXXX XXXXXXXX XXXXXXXX XXXXXXXX XXXXXXXX 0000000X							
0xB0AF8800	reserved XXXXXXXX XXXXXXXX		reserved XXXXXXXX XXXXXXXX		reserved XXXXXXXX XXXXXXXX		RICFG3_RLT0TIN 00000000 00000000	

Table 41. Memory Layout of the PERI3_ERBUS Registers (Continued)

Offset	+7	+6	+5	+4	+3	+2	+1	+0
0xB0AF8808- B0AF8818	reserved XXXXXXXX XXXXXXXX XXXXXXXX XXXXXXXX XXXXXXXX XXXXXXXX XXXXXXXX XXXXXXXX							
0xB0AF8820	reserved XXXXXXXX XXXXXXXX		reserved XXXXXXXX XXXXXXXX		reserved XXXXXXXX XXXXXXXX		RICFG3_RLT1TIN 00000000 00000000	
0xB0AF8828- B0AF8838	reserved XXXXXXXX XXXXXXXX XXXXXXXX XXXXXXXX XXXXXXXX XXXXXXXX XXXXXXXX XXXXXXXX							
0xB0AF8840	reserved XXXXXXXX XXXXXXXX		reserved XXXXXXXX XXXXXXXX		reserved XXXXXXXX XXXXXXXX		RICFG3_RLT2TIN 00000000 00000000	
0xB0AF8848- B0AF8858	reserved XXXXXXXX XXXXXXXX XXXXXXXX XXXXXXXX XXXXXXXX XXXXXXXX XXXXXXXX XXXXXXXX							
0xB0AF8860	reserved XXXXXXXX XXXXXXXX		reserved XXXXXXXX XXXXXXXX		reserved XXXXXXXX XXXXXXXX		RICFG3_RLT3TIN 00000000 00000000	
0xB0AF8868- B0AF8878	reserved XXXXXXXX XXXXXXXX XXXXXXXX XXXXXXXX XXXXXXXX XXXXXXXX XXXXXXXX XXXXXXXX							
0xB0AF8880	reserved XXXXXXXX XXXXXXXX		reserved XXXXXXXX XXXXXXXX		reserved XXXXXXXX XXXXXXXX		RICFG3_RLT4TIN 00000000 00000000	
0xB0AF8888- B0AF8898	reserved XXXXXXXX XXXXXXXX XXXXXXXX XXXXXXXX XXXXXXXX XXXXXXXX XXXXXXXX XXXXXXXX							
0xB0AF88A0	reserved XXXXXXXX XXXXXXXX		reserved XXXXXXXX XXXXXXXX		reserved XXXXXXXX XXXXXXXX		RICFG3_RLT5TIN 00000000 00000000	
0xB0AF88A8- B0AF88B8	reserved XXXXXXXX XXXXXXXX XXXXXXXX XXXXXXXX XXXXXXXX XXXXXXXX XXXXXXXX XXXXXXXX							
0xB0AF88C0	reserved XXXXXXXX XXXXXXXX		reserved XXXXXXXX XXXXXXXX		reserved XXXXXXXX XXXXXXXX		RICFG3_RLT6TIN 00000000 00000000	
0xB0AF88C8- B0AF88D8	reserved XXXXXXXX XXXXXXXX XXXXXXXX XXXXXXXX XXXXXXXX XXXXXXXX XXXXXXXX XXXXXXXX							
0xB0AF88E0	reserved XXXXXXXX XXXXXXXX		reserved XXXXXXXX XXXXXXXX		reserved XXXXXXXX XXXXXXXX		RICFG3_RLT7TIN 00000000 00000000	
0xB0AF88E8- B0AF88F8	reserved XXXXXXXX XXXXXXXX XXXXXXXX XXXXXXXX XXXXXXXX XXXXXXXX XXXXXXXX XXXXXXXX							
0xB0AF8900	reserved XXXXXXXX XXXXXXXX		reserved XXXXXXXX XXXXXXXX		reserved XXXXXXXX XXXXXXXX		RICFG3_RLT8TIN 00000000 00000000	
0xB0AF8908- B0AF8918	reserved XXXXXXXX XXXXXXXX XXXXXXXX XXXXXXXX XXXXXXXX XXXXXXXX XXXXXXXX XXXXXXXX							
0xB0AF8920	reserved XXXXXXXX XXXXXXXX		reserved XXXXXXXX XXXXXXXX		reserved XXXXXXXX XXXXXXXX		RICFG3_RLT9TIN 00000000 00000000	
0xB0AF8928- B0AF8FF8	reserved XXXXXXXX XXXXXXXX XXXXXXXX XXXXXXXX XXXXXXXX XXXXXXXX XXXXXXXX XXXXXXXX							
0xB0AF9000	reserved XXXXXXXX XXXXXXXX		RICFG3_UDC0AIN1 00000000 00000000		reserved XXXXXXXX XXXXXXXX		RICFG3_UDC0AIN0 00000000 00000000	
0xB0AF9008	reserved XXXXXXXX XXXXXXXX		RICFG3_UDC0BIN1 00000000 00000000		reserved XXXXXXXX XXXXXXXX		RICFG3_UDC0BIN0 00000000 00000000	
0xB0AF9010	reserved XXXXXXXX XXXXXXXX		RICFG3_UDC0ZIN1 00000000 00000000		reserved XXXXXXXX XXXXXXXX		RICFG3_UDC0ZIN0 00000000 00000000	
0xB0AF9018- B0AFFBF8	reserved XXXXXXXX XXXXXXXX XXXXXXXX XXXXXXXX XXXXXXXX XXXXXXXX XXXXXXXX XXXXXXXX							
0xB0AFFC00	BSU3_BTST 00000000 00000000 00000000 00000000				reserved XXXXXXXX XXXXXXXX XXXXXXXX XXXXXXXX			
0xB0AFFC08- B0AFFC10	reserved XXXXXXXX XXXXXXXX XXXXXXXX XXXXXXXX XXXXXXXX XXXXXXXX XXXXXXXX XXXXXXXX							

Table 41. Memory Layout of the PERI3_ERBUS Registers (Continued)

Offset	+7	+6	+5	+4	+3	+2	+1	+0
0xB0AFFC18	reserved XXXXXXXX XXXXXXXX XXXXXXXX XXXXXXXX				BSU3_PEN2 00000000 00000000 00000000 00000000			
0xB0AFFC20	reserved XXXXXXXX XXXXXXXX XXXXXXXX XXXXXXXX				BSU3_PEN4 XXXXXXXX XXXXXXXX XXXXXXXX 00000000			
0xB0AFFC28- B0AFFFF8	reserved XXXXXXXX XXXXXXXX XXXXXXXX XXXXXXXX XXXXXXXX XXXXXXXX XXXXXXXX XXXXXXXX							

Table 42. Memory Layout of the PERI4_SLAVE Registers

Offset	+3	+2	+1	+0
0xB0B00000 - 0xB0B1FFFFF	reserved XXXXXXXX XXXXXXXX XXXXXXXX XXXXXXXX			
0xB0B20000	I2S0_RXFDAT0 00000000 00000000 00000000 00000000			
0xB0B20004	I2S0_RXFDAT1 00000000 00000000 00000000 00000000			
0xB0B20008	I2S0_RXFDAT2 00000000 00000000 00000000 00000000			
0xB0B2000C	I2S0_RXFDAT3 00000000 00000000 00000000 00000000			
0xB0B20010	I2S0_RXFDAT4 00000000 00000000 00000000 00000000			
0xB0B20014	I2S0_RXFDAT5 00000000 00000000 00000000 00000000			
0xB0B20018	I2S0_RXFDAT6 00000000 00000000 00000000 00000000			
0xB0B2001C	I2S0_RXFDAT7 00000000 00000000 00000000 00000000			
0xB0B20020	I2S0_RXFDAT8 00000000 00000000 00000000 00000000			
0xB0B20024	I2S0_RXFDAT9 00000000 00000000 00000000 00000000			
0xB0B20028	I2S0_RXFDAT10 00000000 00000000 00000000 00000000			
0xB0B2002C	I2S0_RXFDAT11 00000000 00000000 00000000 00000000			
0xB0B20030	I2S0_RXFDAT12 00000000 00000000 00000000 00000000			
0xB0B20034	I2S0_RXFDAT13 00000000 00000000 00000000 00000000			
0xB0B20038	I2S0_RXFDAT14 00000000 00000000 00000000 00000000			
0xB0B2003C	I2S0_RXFDAT15 00000000 00000000 00000000 00000000			
0xB0B20040	I2S0_TXFDAT0 00000000 00000000 00000000 00000000			
0xB0B20044	I2S0_TXFDAT1 00000000 00000000 00000000 00000000			
0xB0B20048	I2S0_TXFDAT2 00000000 00000000 00000000 00000000			

Table 42. Memory Layout of the PERI4_SLAVE Registers (Continued)

Offset	+3	+2	+1	+0
0xB0B2004C	I2S0_TXFDAT3 00000000 00000000 00000000 00000000			
0xB0B20050	I2S0_TXFDAT4 00000000 00000000 00000000 00000000			
0xB0B20054	I2S0_TXFDAT5 00000000 00000000 00000000 00000000			
0xB0B20058	I2S0_TXFDAT6 00000000 00000000 00000000 00000000			
0xB0B2005C	I2S0_TXFDAT7 00000000 00000000 00000000 00000000			
0xB0B20060	I2S0_TXFDAT8 00000000 00000000 00000000 00000000			
0xB0B20064	I2S0_TXFDAT9 00000000 00000000 00000000 00000000			
0xB0B20068	I2S0_TXFDAT10 00000000 00000000 00000000 00000000			
0xB0B2006C	I2S0_TXFDAT11 00000000 00000000 00000000 00000000			
0xB0B20070	I2S0_TXFDAT12 00000000 00000000 00000000 00000000			
0xB0B20074	I2S0_TXFDAT13 00000000 00000000 00000000 00000000			
0xB0B20078	I2S0_TXFDAT14 00000000 00000000 00000000 00000000			
0xB0B2007C	I2S0_TXFDAT15 00000000 00000000 00000000 00000000			
0xB0B20080	I2S0_CNTREG 00000000 00000000 00000000 01100000			
0xB0B20084	I2S0_MCR0REG 00000000 00000000 00000000 00000000			
0xB0B20088	I2S0_MCR1REG 00000000 00000000 00000000 00000000			
0xB0B2008C	I2S0_MCR2REG 00000000 00000000 00000000 00000000			
0xB0B20090	I2S0_OPRREG 00000000 00000000 00000000 00000000			
0xB0B20094	I2S0_SRST 00000000 00000000 00000000 00000000			
0xB0B20098	I2S0_INTCNT 01111111 00111111 00000000 00000000			
0xB0B2009C	I2S0_STATUS 00000000 00000000 00000000 00000000			
0xB0B200A0	I2S0_DMAACT 00000000 00000000 00000000 00000000			
0xB0B200A4	I2S0_DEBUG 00000000 00000000 00000000 00000000			
0xB0B200A8	I2S0_MIDREG 00000000 00000000 00000000 00000000			
0xB0B200AC- B0B203FC	reserved XXXXXXXX XXXXXXXX XXXXXXXX XXXXXXXX			
0xB0B20400	I2S1_RXFDAT0 00000000 00000000 00000000 00000000			

Table 42. Memory Layout of the PERI4_SLAVE Registers (Continued)

Offset	+3	+2	+1	+0
0xB0B20404	I2S1_RXFDAT1 00000000 00000000 00000000 00000000			
0xB0B20408	I2S1_RXFDAT2 00000000 00000000 00000000 00000000			
0xB0B2040C	I2S1_RXFDAT3 00000000 00000000 00000000 00000000			
0xB0B20410	I2S1_RXFDAT4 00000000 00000000 00000000 00000000			
0xB0B20414	I2S1_RXFDAT5 00000000 00000000 00000000 00000000			
0xB0B20418	I2S1_RXFDAT6 00000000 00000000 00000000 00000000			
0xB0B2041C	I2S1_RXFDAT7 00000000 00000000 00000000 00000000			
0xB0B20420	I2S1_RXFDAT8 00000000 00000000 00000000 00000000			
0xB0B20424	I2S1_RXFDAT9 00000000 00000000 00000000 00000000			
0xB0B20428	I2S1_RXFDAT10 00000000 00000000 00000000 00000000			
0xB0B2042C	I2S1_RXFDAT11 00000000 00000000 00000000 00000000			
0xB0B20430	I2S1_RXFDAT12 00000000 00000000 00000000 00000000			
0xB0B20434	I2S1_RXFDAT13 00000000 00000000 00000000 00000000			
0xB0B20438	I2S1_RXFDAT14 00000000 00000000 00000000 00000000			
0xB0B2043C	I2S1_RXFDAT15 00000000 00000000 00000000 00000000			
0xB0B20440	I2S1_TXFDAT0 00000000 00000000 00000000 00000000			
0xB0B20444	I2S1_TXFDAT1 00000000 00000000 00000000 00000000			
0xB0B20448	I2S1_TXFDAT2 00000000 00000000 00000000 00000000			
0xB0B2044C	I2S1_TXFDAT3 00000000 00000000 00000000 00000000			
0xB0B20450	I2S1_TXFDAT4 00000000 00000000 00000000 00000000			
0xB0B20454	I2S1_TXFDAT5 00000000 00000000 00000000 00000000			
0xB0B20458	I2S1_TXFDAT6 00000000 00000000 00000000 00000000			
0xB0B2045C	I2S1_TXFDAT7 00000000 00000000 00000000 00000000			
0xB0B20460	I2S1_TXFDAT8 00000000 00000000 00000000 00000000			
0xB0B20464	I2S1_TXFDAT9 00000000 00000000 00000000 00000000			
0xB0B20468	I2S1_TXFDAT10 00000000 00000000 00000000 00000000			

Table 42. Memory Layout of the PERI4_SLAVE Registers (Continued)

Offset	+3	+2	+1	+0
0xB0B2046C	I2S1_TXFDAT11 00000000 00000000 00000000 00000000			
0xB0B20470	I2S1_TXFDAT12 00000000 00000000 00000000 00000000			
0xB0B20474	I2S1_TXFDAT13 00000000 00000000 00000000 00000000			
0xB0B20478	I2S1_TXFDAT14 00000000 00000000 00000000 00000000			
0xB0B2047C	I2S1_TXFDAT15 00000000 00000000 00000000 00000000			
0xB0B20480	I2S1_CNTREG 00000000 00000000 00000000 01100000			
0xB0B20484	I2S1_MCR0REG 00000000 00000000 00000000 00000000			
0xB0B20488	I2S1_MCR1REG 00000000 00000000 00000000 00000000			
0xB0B2048C	I2S1_MCR2REG 00000000 00000000 00000000 00000000			
0xB0B20490	I2S1_OPRREG 00000000 00000000 00000000 00000000			
0xB0B20494	I2S1_SRST 00000000 00000000 00000000 00000000			
0xB0B20498	I2S1_INTCNT 01111111 00111111 00000000 00000000			
0xB0B2049C	I2S1_STATUS 00000000 00000000 00000000 00000000			
0xB0B204A0	I2S1_DMAACT 00000000 00000000 00000000 00000000			
0xB0B204A4	I2S1_DEBUG 00000000 00000000 00000000 00000000			
0xB0B204A8	I2S1_MIDREG 00000000 00000000 00000000 00000000			
0xB0B204AC- B0B2FFFC	reserved XXXXXXXX XXXXXXXX XXXXXXXX XXXXXXXX			
0xB0B30000	CRC0_POLY 00000100 11000001 00011101 10110111			
0xB0B30004	CRC0_SEED 11111111 11111111 11111111 11111111			
0xB0B30008	CRC0_FXOR 11111111 11111111 11111111 11111111			
0xB0B3000C	CRC0_CFG 00000000 11100000 00000000 00000000			
0xB0B30010	CRC0_WR 00000000 00000000 00000000 00000000			
0xB0B30014	CRC0_RD 00000000 00000000 00000000 00000000			
0xB0B30018- B0B37FFC	reserved 00000000 00000000 00000000 0000000X			
0xB0B38000	SPI0_MCTRL 00000000 00000000 00000000 00000000			
0xB0B38004	SPI0_PCC0 00000000 00000001 00000000 00000000			

Table 42. Memory Layout of the PERI4_SLAVE Registers (Continued)

Offset	+3	+2	+1	+0
0xB0B38008	SPI0_PCC1 00000000 00000001 00000000 00000000			
0xB0B3800C	SPI0_PCC2 00000000 00000001 00000000 00000000			
0xB0B38010	SPI0_PCC3 00000000 00000001 00000000 00000000			
0xB0B38014	SPI0_TXF 00000000 00000000 00000000 00000000			
0xB0B38018	SPI0_TXE 00000000 00000000 00000000 00000000			
0xB0B3801C	SPI0_TXC 00000000 00000000 00000000 00000000			
0xB0B38020	SPI0_RXF 00000000 00000000 00000000 00000000			
0xB0B38024	SPI0_RXE 00000000 00000000 00000000 00000000			
0xB0B38028	SPI0_RXC 00000000 00000000 00000000 00000000			
0xB0B3802C	SPI0_FAULTF 00000000 00000000 00000000 00000000			
0xB0B38030	SPI0_FAULTC 00000000 00000000 00000000 00000000			
0xB0B38034	read0 00000000 00000000		SPI0_DMDMAEN 00000000	SPI0_DMCFG 00000001
0xB0B38038	SPI0_DMTRP 00000000	SPI0_DMPSEL 00000000	SPI0_DMSTOP 00000000	SPI0_DMSTART 00000000
0xB0B3803C	SPI0_DMBCS 00000000 00000000		SPI0_DMBCC 00000000 00000000	
0xB0B38040	SPI0_DMSTATUS 00000000 00000000 00000000 00000000			
0xB0B38044	read0 00000000 00000000		SPI0_RXBITCNT 00000000	SPI0_TXBITCNT 00000000
0xB0B38048	SPI0_RXSHIFT 00000000 00000000 00000000 00000000			
0xB0B3804C	SPI0_FIFOCFG 00000000 00000000 00000000 01110111			
0xB0B38050	SPI0_TXFIFO0 00000000 00000000 00000000 00000000			
0xB0B38054	SPI0_TXFIFO1 00000000 00000000 00000000 00000000			
0xB0B38058	SPI0_TXFIFO2 00000000 00000000 00000000 00000000			
0xB0B3805C	SPI0_TXFIFO3 00000000 00000000 00000000 00000000			
0xB0B38060	SPI0_TXFIFO4 00000000 00000000 00000000 00000000			
0xB0B38064	SPI0_TXFIFO5 00000000 00000000 00000000 00000000			
0xB0B38068	SPI0_TXFIFO6 00000000 00000000 00000000 00000000			
0xB0B3806C	SPI0_TXFIFO7 00000000 00000000 00000000 00000000			

Table 42. Memory Layout of the PERI4_SLAVE Registers (Continued)

Offset	+3	+2	+1	+0
0xB0B38070	SPI0_TXFIFO8 00000000 00000000 00000000 00000000			
0xB0B38074	SPI0_TXFIFO9 00000000 00000000 00000000 00000000			
0xB0B38078	SPI0_TXFIFO10 00000000 00000000 00000000 00000000			
0xB0B3807C	SPI0_TXFIFO11 00000000 00000000 00000000 00000000			
0xB0B38080	SPI0_TXFIFO12 00000000 00000000 00000000 00000000			
0xB0B38084	SPI0_TXFIFO13 00000000 00000000 00000000 00000000			
0xB0B38088	SPI0_TXFIFO14 00000000 00000000 00000000 00000000			
0xB0B3808C	SPI0_TXFIFO15 00000000 00000000 00000000 00000000			
0xB0B38090	SPI0_RXFIFO0 00000000 00000000 00000000 00000000			
0xB0B38094	SPI0_RXFIFO1 00000000 00000000 00000000 00000000			
0xB0B38098	SPI0_RXFIFO2 00000000 00000000 00000000 00000000			
0xB0B3809C	SPI0_RXFIFO3 00000000 00000000 00000000 00000000			
0xB0B380A0	SPI0_RXFIFO4 00000000 00000000 00000000 00000000			
0xB0B380A4	SPI0_RXFIFO5 00000000 00000000 00000000 00000000			
0xB0B380A8	SPI0_RXFIFO6 00000000 00000000 00000000 00000000			
0xB0B380AC	SPI0_RXFIFO7 00000000 00000000 00000000 00000000			
0xB0B380B0	SPI0_RXFIFO8 00000000 00000000 00000000 00000000			
0xB0B380B4	SPI0_RXFIFO9 00000000 00000000 00000000 00000000			
0xB0B380B8	SPI0_RXFIFO10 00000000 00000000 00000000 00000000			
0xB0B380BC	SPI0_RXFIFO11 00000000 00000000 00000000 00000000			
0xB0B380C0	SPI0_RXFIFO12 00000000 00000000 00000000 00000000			
0xB0B380C4	SPI0_RXFIFO13 00000000 00000000 00000000 00000000			
0xB0B380C8	SPI0_RXFIFO14 00000000 00000000 00000000 00000000			
0xB0B380CC	SPI0_RXFIFO15 00000000 00000000 00000000 00000000			
0xB0B380D0- B0B380F8	reserved 00000000 00000000 00000000 00000000			
0xB0B380FC	SPI0_MID 00000000 00000000 00000000 00000001			

Table 42. Memory Layout of the PERI4_SLAVE Registers (Continued)

Offset	+3	+2	+1	+0
0xB0B38100- B0B383FC	reserved 00000000 00000000 00000000 0000000X			
0xB0B38400	SPI1_MCTRL 00000000 00000000 00000000 00000000			
0xB0B38404	SPI1_PCC0 00000000 00000001 00000000 00000000			
0xB0B38408	SPI1_PCC1 00000000 00000001 00000000 00000000			
0xB0B3840C	SPI1_PCC2 00000000 00000001 00000000 00000000			
0xB0B38410	SPI1_PCC3 00000000 00000001 00000000 00000000			
0xB0B38414	SPI1_TXF 00000000 00000000 00000000 00000000			
0xB0B38418	SPI1_TXE 00000000 00000000 00000000 00000000			
0xB0B3841C	SPI1_TXC 00000000 00000000 00000000 00000000			
0xB0B38420	SPI1_RXF 00000000 00000000 00000000 00000000			
0xB0B38424	SPI1_RXE 00000000 00000000 00000000 00000000			
0xB0B38428	SPI1_RXC 00000000 00000000 00000000 00000000			
0xB0B3842C	SPI1_FAULTF 00000000 00000000 00000000 00000000			
0xB0B38430	SPI1_FAULTC 00000000 00000000 00000000 00000000			
0xB0B38434	read0 00000000 00000000		SPI1_DMDMAEN 00000000	SPI1_DMCFG 00000001
0xB0B38438	SPI1_DMTRP 00000000	SPI1_DMPSEL 00000000	SPI1_DMSTOP 00000000	SPI1_DMSTART 00000000
0xB0B3843C	SPI1_DMBCS 00000000 00000000		SPI1_DMBCC 00000000 00000000	
0xB0B38440	SPI1_DMSTATUS 00000000 00000000 00000000 00000000			
0xB0B38444	read0 00000000 00000000		SPI1_RXBITCNT 00000000	SPI1_TXBITCNT 00000000
0xB0B38448	SPI1_RXSHIFT 00000000 00000000 00000000 00000000			
0xB0B3844C	SPI1_FIFOCFG 00000000 00000000 00000000 01110111			
0xB0B38450	SPI1_TXFIFO0 00000000 00000000 00000000 00000000			
0xB0B38454	SPI1_TXFIFO1 00000000 00000000 00000000 00000000			
0xB0B38458	SPI1_TXFIFO2 00000000 00000000 00000000 00000000			
0xB0B3845C	SPI1_TXFIFO3 00000000 00000000 00000000 00000000			
0xB0B38460	SPI1_TXFIFO4 00000000 00000000 00000000 00000000			

Table 42. Memory Layout of the PERI4_SLAVE Registers (Continued)

Offset	+3	+2	+1	+0
0xB0B38464	SPI1_TXFIFO5 00000000 00000000 00000000 00000000			
0xB0B38468	SPI1_TXFIFO6 00000000 00000000 00000000 00000000			
0xB0B3846C	SPI1_TXFIFO7 00000000 00000000 00000000 00000000			
0xB0B38470	SPI1_TXFIFO8 00000000 00000000 00000000 00000000			
0xB0B38474	SPI1_TXFIFO9 00000000 00000000 00000000 00000000			
0xB0B38478	SPI1_TXFIFO10 00000000 00000000 00000000 00000000			
0xB0B3847C	SPI1_TXFIFO11 00000000 00000000 00000000 00000000			
0xB0B38480	SPI1_TXFIFO12 00000000 00000000 00000000 00000000			
0xB0B38484	SPI1_TXFIFO13 00000000 00000000 00000000 00000000			
0xB0B38488	SPI1_TXFIFO14 00000000 00000000 00000000 00000000			
0xB0B3848C	SPI1_TXFIFO15 00000000 00000000 00000000 00000000			
0xB0B38490	SPI1_RXFIFO0 00000000 00000000 00000000 00000000			
0xB0B38494	SPI1_RXFIFO1 00000000 00000000 00000000 00000000			
0xB0B38498	SPI1_RXFIFO2 00000000 00000000 00000000 00000000			
0xB0B3849C	SPI1_RXFIFO3 00000000 00000000 00000000 00000000			
0xB0B384A0	SPI1_RXFIFO4 00000000 00000000 00000000 00000000			
0xB0B384A4	SPI1_RXFIFO5 00000000 00000000 00000000 00000000			
0xB0B384A8	SPI1_RXFIFO6 00000000 00000000 00000000 00000000			
0xB0B384AC	SPI1_RXFIFO7 00000000 00000000 00000000 00000000			
0xB0B384B0	SPI1_RXFIFO8 00000000 00000000 00000000 00000000			
0xB0B384B4	SPI1_RXFIFO9 00000000 00000000 00000000 00000000			
0xB0B384B8	SPI1_RXFIFO10 00000000 00000000 00000000 00000000			
0xB0B384BC	SPI1_RXFIFO11 00000000 00000000 00000000 00000000			
0xB0B384C0	SPI1_RXFIFO12 00000000 00000000 00000000 00000000			
0xB0B384C4	SPI1_RXFIFO13 00000000 00000000 00000000 00000000			
0xB0B384C8	SPI1_RXFIFO14 00000000 00000000 00000000 00000000			

Table 42. Memory Layout of the PERI4_SLAVE Registers (Continued)

Offset	+3	+2	+1	+0
0xB0B384CC	SPI1_RXFIFO15 00000000 00000000 00000000 00000000			
0xB0B384D0- B0B384F8	reserved 00000000 00000000 00000000 00000000			
0xB0B384FC	SPI1_MID 00000000 00000000 00000000 00000001			
0xB0B38500- B0B387FC	reserved 00000000 00000000 00000000 0000000X			
0xB0B38800	SPI2_MCTRL 00000000 00000000 00000000 00000000			
0xB0B38804	SPI2_PCC0 00000000 00000001 00000000 00000000			
0xB0B38808	SPI2_PCC1 00000000 00000001 00000000 00000000			
0xB0B3880C	SPI2_PCC2 00000000 00000001 00000000 00000000			
0xB0B38810	SPI2_PCC3 00000000 00000001 00000000 00000000			
0xB0B38814	SPI2_TXF 00000000 00000000 00000000 00000000			
0xB0B38818	SPI2_TXE 00000000 00000000 00000000 00000000			
0xB0B3881C	SPI2_TXC 00000000 00000000 00000000 00000000			
0xB0B38820	SPI2_RXF 00000000 00000000 00000000 00000000			
0xB0B38824	SPI2_RXE 00000000 00000000 00000000 00000000			
0xB0B38828	SPI2_RXC 00000000 00000000 00000000 00000000			
0xB0B3882C	SPI2_FAULTF 00000000 00000000 00000000 00000000			
0xB0B38830	SPI2_FAULTC 00000000 00000000 00000000 00000000			
0xB0B38834	read0 00000000 00000000		SPI2_DMDMAEN 00000000	SPI2_DMCFG 00000001
0xB0B38838	SPI2_DMTRP 00000000	SPI2_DMPSEL 00000000	SPI2_DMSTOP 00000000	SPI2_DMSTART 00000000
0xB0B3883C	SPI2_DMBCS 00000000 00000000		SPI2_DMBCC 00000000 00000000	
0xB0B38840	SPI2_DMSTATUS 00000000 00000000 00000000 00000000			
0xB0B38844	read0 00000000 00000000		SPI2_RXBITCNT 00000000	SPI2_TXBITCNT 00000000
0xB0B38848	SPI2_RXSHIFT 00000000 00000000 00000000 00000000			
0xB0B3884C	SPI2_FIFOCFG 00000000 00000000 00000000 01110111			
0xB0B38850	SPI2_TXFIFO0 00000000 00000000 00000000 00000000			
0xB0B38854	SPI2_TXFIFO1 00000000 00000000 00000000 00000000			

Table 42. Memory Layout of the PERI4_SLAVE Registers (Continued)

Offset	+3	+2	+1	+0
0xB0B38858	SPI2_TXFIFO2 00000000 00000000 00000000 00000000			
0xB0B3885C	SPI2_TXFIFO3 00000000 00000000 00000000 00000000			
0xB0B38860	SPI2_TXFIFO4 00000000 00000000 00000000 00000000			
0xB0B38864	SPI2_TXFIFO5 00000000 00000000 00000000 00000000			
0xB0B38868	SPI2_TXFIFO6 00000000 00000000 00000000 00000000			
0xB0B3886C	SPI2_TXFIFO7 00000000 00000000 00000000 00000000			
0xB0B38870	SPI2_TXFIFO8 00000000 00000000 00000000 00000000			
0xB0B38874	SPI2_TXFIFO9 00000000 00000000 00000000 00000000			
0xB0B38878	SPI2_TXFIFO10 00000000 00000000 00000000 00000000			
0xB0B3887C	SPI2_TXFIFO11 00000000 00000000 00000000 00000000			
0xB0B38880	SPI2_TXFIFO12 00000000 00000000 00000000 00000000			
0xB0B38884	SPI2_TXFIFO13 00000000 00000000 00000000 00000000			
0xB0B38888	SPI2_TXFIFO14 00000000 00000000 00000000 00000000			
0xB0B3888C	SPI2_TXFIFO15 00000000 00000000 00000000 00000000			
0xB0B38890	SPI2_RXFIFO0 00000000 00000000 00000000 00000000			
0xB0B38894	SPI2_RXFIFO1 00000000 00000000 00000000 00000000			
0xB0B38898	SPI2_RXFIFO2 00000000 00000000 00000000 00000000			
0xB0B3889C	SPI2_RXFIFO3 00000000 00000000 00000000 00000000			
0xB0B388A0	SPI2_RXFIFO4 00000000 00000000 00000000 00000000			
0xB0B388A4	SPI2_RXFIFO5 00000000 00000000 00000000 00000000			
0xB0B388A8	SPI2_RXFIFO6 00000000 00000000 00000000 00000000			
0xB0B388AC	SPI2_RXFIFO7 00000000 00000000 00000000 00000000			
0xB0B388B0	SPI2_RXFIFO8 00000000 00000000 00000000 00000000			
0xB0B388B4	SPI2_RXFIFO9 00000000 00000000 00000000 00000000			
0xB0B388B8	SPI2_RXFIFO10 00000000 00000000 00000000 00000000			
0xB0B388BC	SPI2_RXFIFO11 00000000 00000000 00000000 00000000			

Table 42. Memory Layout of the PERI4_SLAVE Registers (Continued)

Offset	+3	+2	+1	+0
0xB0B388C0	SPI2_RXFIFO12 00000000 00000000 00000000 00000000			
0xB0B388C4	SPI2_RXFIFO13 00000000 00000000 00000000 00000000			
0xB0B388C8	SPI2_RXFIFO14 00000000 00000000 00000000 00000000			
0xB0B388CC	SPI2_RXFIFO15 00000000 00000000 00000000 00000000			
0xB0B388D0- B0B388F8	reserved 00000000 00000000 00000000 00000000			
0xB0B388FC	SPI2_MID 00000000 00000000 00000000 00000001			
0xB0B38900- B0B3FFFC	reserved XXXXXXXX XXXXXXXX XXXXXXXX XXXXXXXX			
0xB0B40000	ARH0_RHCTRL 00000000 00000000 00000000 00000001			
0xB0B40004	ARH0_CHCTRL0 00001111 00000000 00000000 00000000			
0xB0B40008	ARH0_CHSTAT0 00000000 00000000 00000000 00000000			
0xB0B4000C	ARH0_CHWDGCTL0 00000000 00000000 00000000 00000000			
0xB0B40010	ARH0_CHWDGCNT0 00000000 00000000 XXXXXXXX XXXXXXXX			
0xB0B40014	ARH0_CHCTRL1 00000111 00000000 00000000 00000000			
0xB0B40018	ARH0_CHSTAT1 00000000 00000000 00000000 00000000			
0xB0B4001C	ARH0_CHWDGCTL1 00000000 00000000 00000000 00000000			
0xB0B40020	ARH0_CHWDGCNT1 00000000 00000000 XXXXXXXX XXXXXXXX			
0xB0B40024	ARH0_TBCTRL0 00000000 00000000 00000000 00000000			
0xB0B40028	ARH0_TBCTRL1 00000000 00000000 00000000 00000000			
0xB0B4002C	ARH0_TBCTRL2 00000000 00000000 00000000 00000000			
0xB0B40030	ARH0_TBCTRL3 00000000 00000000 00000000 00000000			
0xB0B40034	ARH0_TBCTRL4 00000000 00000000 00000000 00000000			
0xB0B40038	ARH0_TBCTRL5 00000000 00000000 00000000 00000000			
0xB0B4003C	ARH0_TBCTRL6 00000000 00000000 00000000 00000000			
0xB0B40040	ARH0_TBCTRL7 00000000 00000000 00000000 00000000			
0xB0B40044	ARH0_TBCTRL8 00000000 00000000 00000000 00000000			
0xB0B40048	ARH0_TBCTRL9 00000000 00000000 00000000 00000000			

Table 42. Memory Layout of the PERI4_SLAVE Registers (Continued)

Offset	+3	+2	+1	+0
0xB0B4004C	ARH0_TBCTRL10 00000000 00000000 00000000 00000000			
0xB0B40050	ARH0_TBCTRL11 00000000 00000000 00000000 00000000			
0xB0B40054	ARH0_TBCTRL12 00000000 00000000 00000000 00000000			
0xB0B40058	ARH0_TBCTRL13 00000000 00000000 00000000 00000000			
0xB0B4005C	ARH0_TBCTRL14 00000000 00000000 00000000 00000000			
0xB0B40060	ARH0_TBCTRL15 00000000 00000000 00000000 00000000			
0xB0B40064	ARH0_TBIRQ 00000000 00000000		ARH0_TBIDX0 00000000	ARH0_TBIDX1 00000000
0xB0B40068	ARH0_TFCTRL0 00000000	ARH0_TFIDX0 00000000	ARH0_TFCTRL1 00000000	ARH0_TFIDX1 00000000
0xB0B4006C	ARH0_TFCTRL2 00000000	ARH0_TFIDX2 00000000	ARH0_TFCTRL3 00000000	ARH0_TFIDX3 00000000
0xB0B40070	ARH0_TFCTRL4 00000000	ARH0_TFIDX4 00000000	ARH0_TFCTRL5 00000000	ARH0_TFIDX5 00000000
0xB0B40074	ARH0_TFCTRL6 00000000	ARH0_TFIDX6 00000000	ARH0_TFCTRL7 00000000	ARH0_TFIDX7 00000000
0xB0B40078	ARH0_TFCTRL8 00000000	ARH0_TFIDX8 00000000	ARH0_TFCTRL9 00000000	ARH0_TFIDX9 00000000
0xB0B4007C	ARH0_TFCTRL10 00000000	ARH0_TFIDX10 00000000	ARH0_TFCTRL11 00000000	ARH0_TFIDX11 00000000
0xB0B40080	ARH0_TFCTRL12 00000000	ARH0_TFIDX12 00000000	ARH0_TFCTRL13 00000000	ARH0_TFIDX13 00000000
0xB0B40084	ARH0_TFCTRL14 00000000	ARH0_TFIDX14 00000000	ARH0_TFCTRL15 00000000	ARH0_TFIDX15 00000000
0xB0B40088	ARH0_TFADDR0 00000000 00000000 00000000 00000000			
0xB0B4008C	ARH0_TFADDR1 00000000 00000000 00000000 00000000			
0xB0B40090	ARH0_TFADDR2 00000000 00000000 00000000 00000000			
0xB0B40094	ARH0_TFADDR3 00000000 00000000 00000000 00000000			
0xB0B40098	ARH0_TFADDR4 00000000 00000000 00000000 00000000			
0xB0B4009C	ARH0_TFADDR5 00000000 00000000 00000000 00000000			
0xB0B400A0	ARH0_TFADDR6 00000000 00000000 00000000 00000000			
0xB0B400A4	ARH0_TFADDR7 00000000 00000000 00000000 00000000			
0xB0B400A8	ARH0_TFADDR8 00000000 00000000 00000000 00000000			
0xB0B400AC	ARH0_TFADDR9 00000000 00000000 00000000 00000000			
0xB0B400B0	ARH0_TFADDR10 00000000 00000000 00000000 00000000			

Table 42. Memory Layout of the PERI4_SLAVE Registers (Continued)

Offset	+3	+2	+1	+0
0xB0B400B4	ARH0_TFADDR11 00000000 00000000 00000000 00000000			
0xB0B400B8	ARH0_TFADDR12 00000000 00000000 00000000 00000000			
0xB0B400BC	ARH0_TFADDR13 00000000 00000000 00000000 00000000			
0xB0B400C0	ARH0_TFADDR14 00000000 00000000 00000000 00000000			
0xB0B400C4	ARH0_TFADDR15 00000000 00000000 00000000 00000000			
0xB0B400C8	ARH0_TFDATA0 00000000 00000000 00000000 00000000			
0xB0B400CC	ARH0_TFDATA1 00000000 00000000 00000000 00000000			
0xB0B400D0	ARH0_TFDATA2 00000000 00000000 00000000 00000000			
0xB0B400D4	ARH0_TFDATA3 00000000 00000000 00000000 00000000			
0xB0B400D8	ARH0_TFDATA4 00000000 00000000 00000000 00000000			
0xB0B400DC	ARH0_TFDATA5 00000000 00000000 00000000 00000000			
0xB0B400E0	ARH0_TFDATA6 00000000 00000000 00000000 00000000			
0xB0B400E4	ARH0_TFDATA7 00000000 00000000 00000000 00000000			
0xB0B400E8	ARH0_TFDATA8 00000000 00000000 00000000 00000000			
0xB0B400EC	ARH0_TFDATA9 00000000 00000000 00000000 00000000			
0xB0B400F0	ARH0_TFDATA10 00000000 00000000 00000000 00000000			
0xB0B400F4	ARH0_TFDATA11 00000000 00000000 00000000 00000000			
0xB0B400F8	ARH0_TFDATA12 00000000 00000000 00000000 00000000			
0xB0B400FC	ARH0_TFDATA13 00000000 00000000 00000000 00000000			
0xB0B40100	ARH0_TFDATA14 00000000 00000000 00000000 00000000			
0xB0B40104	ARH0_TFDATA15 00000000 00000000 00000000 00000000			
0xB0B40108	ARH0_EVCTRL 00000000 00000000 00000000 10000000			
0xB0B4010C	ARH0_EVIRQC 00000000 00000000 00000000 00000000			
0xB0B40110	ARH0_EVBUF0 0000000X XXXXXXXX 00000000 00000000			
0xB0B40114	ARH0_EVBUF1 XXXXXXXX XXXXXXXX XXXXXXXX XXXXXXXX			
0xB0B40118	ARH0_APCFG00 0000X000 00110000 00000000 10010000			

Table 42. Memory Layout of the PERI4_SLAVE Registers (Continued)

Offset	+3	+2	+1	+0
0xB0B4011C	ARH0_APCFG01 11110000 00000000 00000000 01001000			
0xB0B40120	ARH0_APCFG02 0000001X 00000010 01000000 00000000			
0xB0B40124	ARH0_APCFG03 00100110 10100100 10011010 00000000			
0xB0B40128	ARH0_APCFG10 00000000 0011000000000000 10010000			
0xB0B4012C	ARH0_APCFG11 111100XX 00000000 00000000 0100100X			
0xB0B40130	ARH0_APCFG12 00000010 00000010 01000000 00000000			
0xB0B40134	ARH0_APCFG13 00100110 10100100 10011010 00000000			
0xB0B40138	ARH0_TST 00000000 00000000 00000000 00000000			
0xB0B4013C	ARH0_UNLOCK 00000000 00000000 00000000 00000000			
0xB0B40140	ARH0_MID 00000000 00000000 00000000 00000000			
0xB0B40144	ARH0_APCFG04 00000000 00000000 00000000 00000000			
0xB0B40148	ARH0_APCFG14 00000000 00000000 00000000 00000000			
0xB0B4014C	ARH0_EVAL0 00000000 00000000 00000000 00000000			
0xB0B40150	ARH0_EVAL1 00000000 00000000 00000000 00000000			
0xB0B40154	ARH0_EVAL2 00000000 00000000 00000000 00001010			
0xB0B40158	ARH0_EVAL3 00000000 00000000 00000000 00000000			
0xB0B4015C	ARH0_EVAL4 00000000 00000000 00000000 00001100			
0xB0B40160	ARH0_EVAL5 00000000 00000000 00000000 00000000			
0xB0B40164	ARH0_EVAL6 00000000 00000000 00000000 00000000			
0xB0B40168	ARH0_EVAL7 00000000 00000000 00000000 00000000			
0xB0B4016C- B0BF8FFC	reserved XXXXXXXX XXXXXXXX XXXXXXXX XXXXXXXX			
0xB0BF9000	read0 00000000 00000000		RICFG4_I2S0ECLK 00000000 00000000	
0xB0BF9004	read0 00000000 00000000		RICFG4_I2S0SCKI 00000000 00000000	
0xB0BF9008	read0 00000000 00000000		RICFG4_I2S0SDI 00000000 00000000	
0xB0BF900C	read0 00000000 00000000		RICFG4_I2S0WSI 00000000 00000000	
0xB0BF9010- B0BF901C	reserved 00000000 00000000 00000000 00000000			

Table 42. Memory Layout of the PERI4_SLAVE Registers (Continued)

Offset	+3	+2	+1	+0
0xB0BF9020	read0 00000000 00000000		RICFG4_I2S1ECLK 00000000 00000000	
0xB0BF9024	read0 00000000 00000000		RICFG4_I2S1SCKI 00000000 00000000	
0xB0BF9028	read0 00000000 00000000		RICFG4_I2S1SDI 00000000 00000000	
0xB0BF902C	read0 00000000 00000000		RICFG4_I2S1WSI 00000000 00000000	
0xB0BF9030- B0BF9BFC	reserved 00000000 00000000 00000000 00000000			
0xB0BF9C00	read0 00000000 00000000		RICFG4_SPI0CLKI 00000000 00000000	
0xB0BF9C04	read0 00000000 00000000		RICFG4_SPI0DATA0I 00000000 00000000	
0xB0BF9C08	read0 00000000 00000000		RICFG4_SPI0DATA1I 00000000 00000000	
0xB0BF9C0C	read0 00000000 00000000		RICFG4_SPI0DATA2I 00000000 00000000	
0xB0BF9C10	read0 00000000 00000000		RICFG4_SPI0DATA3I 00000000 00000000	
0xB0BF9C14	read0 00000000 00000000		RICFG4_SPI0MSTART 00000000 00000000	
0xB0BF9C18	read0 00000000 00000000		RICFG4_SPI0SSI 00000000 00000000	
0xB0BF9C1C	reserved 00000000 00000000 00000000 00000000			
0xB0BF9C20	read0 00000000 00000000		RICFG4_SPI1CLKI 00000000 00000000	
0xB0BF9C24	read0 00000000 00000000		RICFG4_SPI1DATA0I 00000000 00000000	
0xB0BF9C28	read0 00000000 00000000		RICFG4_SPI1DATA1I 00000000 00000000	
0xB0BF9C2C	read0 00000000 00000000		RICFG4_SPI1DATA2I 00000000 00000000	
0xB0BF9C30	read0 00000000 00000000		RICFG4_SPI1DATA3I 00000000 00000000	
0xB0BF9C34	read0 00000000 00000000		RICFG4_SPI1MSTART 00000000 00000000	
0xB0BF9C38	read0 00000000 00000000		RICFG4_SPI1SSI 00000000 00000000	
0xB0BF9C3C	reserved 00000000 00000000 00000000 00000000			
0xB0BF9C40	read0 00000000 00000000		RICFG4_SPI2CLKI 00000000 00000000	
0xB0BF9C44	read0 00000000 00000000		RICFG4_SPI2DATA0I 00000000 00000000	
0xB0BF9C48	read0 00000000 00000000		RICFG4_SPI2DATA1I 00000000 00000000	
0xB0BF9C4C	read0 00000000 00000000		RICFG4_SPI2DATA2I 00000000 00000000	

Table 42. Memory Layout of the PERI4_SLAVE Registers (Continued)

Offset	+3	+2	+1	+0
0xB0BF9C50	read0 00000000 00000000		RICFG4_SPI2DATA3I 00000000 00000000	
0xB0BF9C54	read0 00000000 00000000		RICFG4_SPI2MSTART 00000000 00000000	
0xB0BF9C58	read0 00000000 00000000		RICFG4_SPI2SSI 00000000 00000000	
0xB0BF9C5C- B0BF9FFC	reserved 00000000 00000000 00000000 00000000			
0xB0BFA000	read0 00000000 00000000		RICFG4_ARH0AIC0RCK 00000000 00000000	
0xB0BFA004	read0 00000000 00000000		RICFG4_ARH0AIC0RDA0 00000000 00000000	
0xB0BFA008	read0 00000000 00000000		RICFG4_ARH0AIC0RDA1 00000000 00000000	
0xB0BFA00C	read0 00000000 00000000		RICFG4_ARH0AIC0TCKI 00000000 00000000	
0xB0BFA010	read0 00000000 00000000		RICFG4_ARH0AIC0UPCLK 00000000 00000000	
0xB0BFA014	read0 00000000 00000000		RICFG4_ARH0AIC0UPDATA0 00000000 00000000	
0xB0BFA018	read0 00000000 00000000		RICFG4_ARH0AIC0UPDATA1 00000000 00000000	
0xB0BFA01C	read0 00000000 00000000		RICFG4_ARH0AIC0DBGSELECT 00000000 00000000	
0xB0BFA020	read0 00000000 00000000		RICFG4_ARH0AIC1RCK 00000000 00000000	
0xB0BFA024	read0 00000000 00000000		RICFG4_ARH0AIC1RDA0 00000000 00000000	
0xB0BFA028	read0 00000000 00000000		RICFG4_ARH0AIC1RDA1 00000000 00000000	
0xB0BFA02C	read0 00000000 00000000		RICFG4_ARH0AIC1TCKI 00000000 00000000	
0xB0BFA030	read0 00000000 00000000		RICFG4_ARH0AIC1UPCLK 00000000 00000000	
0xB0BFA034	read0 00000000 00000000		RICFG4_ARH0AIC1UPDATA0 00000000 00000000	
0xB0BFA038	read0 00000000 00000000		RICFG4_ARH0AIC1UPDATA1 00000000 00000000	
0xB0BFA03C	read0 00000000 00000000		RICFG4_ARH0AIC1DBGSELECT 00000000 00000000	
0xB0BFA040- B0BFFC00	reserved XXXXXXXX XXXXXXXX XXXXXXXX XXXXXXXX			
0xB0BFFC04	BSU4_BTST 00000000 00000000 00000000 00000000			
0xB0BFFC08- B0BFFC10	reserved XXXXXXXX XXXXXXXX XXXXXXXX XXXXXXXX			
0xB0BFFC14	BSU4_PEN1 00000000 00000000 00000000 00000000			
0xB0BFFC18	BSU4_PEN2 00000000 00000000 00000000 00000000			

Table 42. Memory Layout of the PERI4_SLAVE Registers (Continued)

Offset	+3	+2	+1	+0
0xB0BFFC1C	BSU4_PEN3 00000000 00000000 00000000 00000000			
0xB0BFFC20	BSU4_PEN4 00000000 00000000 00000000 00000000			
0xB0BFFC24	BSU4_PEN5 00000000 00000000 00000000 00000000			
0xB0BFFC28	BSU4_PEN6 00000000 00000000 00000000 00000000			
0xB0BFFC2C	BSU4_PEN7 00000000 00000000 00000000 00000000			
0xB0BFFC30	BSU4_PEN8 00000000 00000000 00000000 00000000			
0xB0BFFC34- B0BFFFFC	reserved XXXXXXXX XXXXXXXX XXXXXXXX XXXXXXXX			

Table 43. Memory Layout for the PERI5_AHB Registers

Offset	+3	+2	+1	+0
0xB0C00000	DMA0_A0 00000000 00001111 00000000 00000000			
0xB0C00004	DMA0_B0 00000000 00000000 00110011 01111111			
0xB0C00008	DMA0_SA0 00000000 00000000 00000000 00000000			
0xB0C0000C	DMA0_DA0 00000000 00000000 00000000 00000000			
0xB0C00010	DMA0_C0 XXXXXXXX XXXXXXXX 00000000 00000000			
0xB0C00014	DMA0_D0 00000000 XXXXXXXX 00000000 XXXXXXXX			
0xB0C00018	DMA0_SASHDW0 00000000 00000000 00000000 00000000			
0xB0C0001C	DMA0_DASHDW0 00000000 00000000 00000000 00000000			
0xB0C00020- B0C0003C	reserved XXXXXXXX XXXXXXXX XXXXXXXX XXXXXXXX			
0xB0C00040	DMA0_A1 00000000 00001111 00000000 00000000			
0xB0C00044	DMA0_B1 00000000 00000000 00110011 01111111			
0xB0C00048	DMA0_SA1 00000000 00000000 00000000 00000000			
0xB0C0004C	DMA0_DA1 00000000 00000000 00000000 00000000			
0xB0C00050	DMA0_C1 XXXXXXXX XXXXXXXX 00000000 00000000			
0xB0C00054	DMA0_D1 00000000 XXXXXXXX 00000000 XXXXXXXX			
0xB0C00058	DMA0_SASHDW1 00000000 00000000 00000000 00000000			
0xB0C0005C	DMA0_DASHDW1 00000000 00000000 00000000 00000000			

Table 43. Memory Layout for the PERI5_AHB Registers (Continued)

Offset	+3	+2	+1	+0
0xB0C00060- B0C0007C	reserved XXXXXXXX XXXXXXXX XXXXXXXX XXXXXXXX			
0xB0C00080	DMA0_A2 00000000 00001111 00000000 00000000			
0xB0C00084	DMA0_B2 00000000 00000000 00110011 01111111			
0xB0C00088	DMA0_SA2 00000000 00000000 00000000 00000000			
0xB0C0008C	DMA0_DA2 00000000 00000000 00000000 00000000			
0xB0C00090	DMA0_C2 XXXXXXXX XXXXXXXX 00000000 00000000			
0xB0C00094	DMA0_D2 00000000 XXXXXXXX 00000000 XXXXXXXX			
0xB0C00098	DMA0_SASHDW2 00000000 00000000 00000000 00000000			
0xB0C0009C	DMA0_DASHDW2 00000000 00000000 00000000 00000000			
0xB0C000A0- B0C000BC	reserved XXXXXXXX XXXXXXXX XXXXXXXX XXXXXXXX			
0xB0C000C0	DMA0_A3 00000000 00001111 00000000 00000000			
0xB0C000C4	DMA0_B3 00000000 00000000 00110011 01111111			
0xB0C000C8	DMA0_SA3 00000000 00000000 00000000 00000000			
0xB0C000CC	DMA0_DA3 00000000 00000000 00000000 00000000			
0xB0C000D0	DMA0_C3 XXXXXXXX XXXXXXXX 00000000 00000000			
0xB0C000D4	DMA0_D3 00000000 XXXXXXXX 00000000 XXXXXXXX			
0xB0C000D8	DMA0_SASHDW3 00000000 00000000 00000000 00000000			
0xB0C000DC	DMA0_DASHDW3 00000000 00000000 00000000 00000000			
0xB0C000E0- B0C000FC	reserved XXXXXXXX XXXXXXXX XXXXXXXX XXXXXXXX			
0xB0C00100	DMA0_A4 00000000 00001111 00000000 00000000			
0xB0C00104	DMA0_B4 00000000 00000000 00110011 01111111			
0xB0C00108	DMA0_SA4 00000000 00000000 00000000 00000000			
0xB0C0010C	DMA0_DA4 00000000 00000000 00000000 00000000			
0xB0C00110	DMA0_C4 XXXXXXXX XXXXXXXX 00000000 00000000			
0xB0C00114	DMA0_D4 00000000 XXXXXXXX 00000000 XXXXXXXX			
0xB0C00118	DMA0_SASHDW4 00000000 00000000 00000000 00000000			

Table 43. Memory Layout for the PERI5_AHB Registers (Continued)

Offset	+3	+2	+1	+0
0xB0C0011C	DMA0_DASHDW4 00000000 00000000 00000000 00000000			
0xB0C00120- B0C0013C	reserved XXXXXXXX XXXXXXXX XXXXXXXX XXXXXXXX			
0xB0C00140	DMA0_A5 00000000 00001111 00000000 00000000			
0xB0C00144	DMA0_B5 00000000 00000000 00110011 01111111			
0xB0C00148	DMA0_SA5 00000000 00000000 00000000 00000000			
0xB0C0014C	DMA0_DA5 00000000 00000000 00000000 00000000			
0xB0C00150	DMA0_C5 XXXXXXXX XXXXXXXX 00000000 00000000			
0xB0C00154	DMA0_D5 00000000 XXXXXXXX 00000000 XXXXXXXX			
0xB0C00158	DMA0_SASHDW5 00000000 00000000 00000000 00000000			
0xB0C0015C	DMA0_DASHDW5 00000000 00000000 00000000 00000000			
0xB0C00160- B0C0017C	reserved XXXXXXXX XXXXXXXX XXXXXXXX XXXXXXXX			
0xB0C00180	DMA0_A6 00000000 00001111 00000000 00000000			
0xB0C00184	DMA0_B6 00000000 00000000 00110011 01111111			
0xB0C00188	DMA0_SA6 00000000 00000000 00000000 00000000			
0xB0C0018C	DMA0_DA6 00000000 00000000 00000000 00000000			
0xB0C00190	DMA0_C6 XXXXXXXX XXXXXXXX 00000000 00000000			
0xB0C00194	DMA0_D6 00000000 XXXXXXXX 00000000 XXXXXXXX			
0xB0C00198	DMA0_SASHDW6 00000000 00000000 00000000 00000000			
0xB0C0019C	DMA0_DASHDW6 00000000 00000000 00000000 00000000			
0xB0C001A0- B0C001BC	reserved XXXXXXXX XXXXXXXX XXXXXXXX XXXXXXXX			
0xB0C001C0	DMA0_A7 00000000 00001111 00000000 00000000			
0xB0C001C4	DMA0_B7 00000000 00000000 00110011 01111111			
0xB0C001C8	DMA0_SA7 00000000 00000000 00000000 00000000			
0xB0C001CC	DMA0_DA7 00000000 00000000 00000000 00000000			
0xB0C001D0	DMA0_C7 XXXXXXXX XXXXXXXX 00000000 00000000			
0xB0C001D4	DMA0_D7 00000000 XXXXXXXX 00000000 XXXXXXXX			

Table 43. Memory Layout for the PERI5_AHB Registers (Continued)

Offset	+3	+2	+1	+0
0xB0C001D8	DMA0_SASHDW7 00000000 00000000 00000000 00000000			
0xB0C001DC	DMA0_DASHDW7 00000000 00000000 00000000 00000000			
0xB0C001E0- B0C001FC	reserved XXXXXXXX XXXXXXXX XXXXXXXX XXXXXXXX			
0xB0C00200	DMA0_A8 00000000 00001111 00000000 00000000			
0xB0C00204	DMA0_B8 00000000 00000000 00110011 01111111			
0xB0C00208	DMA0_SA8 00000000 00000000 00000000 00000000			
0xB0C0020C	DMA0_DA8 00000000 00000000 00000000 00000000			
0xB0C00210	DMA0_C8 XXXXXXXX XXXXXXXX 00000000 00000000			
0xB0C00214	DMA0_D8 00000000 XXXXXXXX 00000000 XXXXXXXX			
0xB0C00218	DMA0_SASHDW8 00000000 00000000 00000000 00000000			
0xB0C0021C	DMA0_DASHDW8 00000000 00000000 00000000 00000000			
0xB0C00220- B0C0023C	reserved XXXXXXXX XXXXXXXX XXXXXXXX XXXXXXXX			
0xB0C00240	DMA0_A9 00000000 00001111 00000000 00000000			
0xB0C00244	DMA0_B9 00000000 00000000 00110011 01111111			
0xB0C00248	DMA0_SA9 00000000 00000000 00000000 00000000			
0xB0C0024C	DMA0_DA9 00000000 00000000 00000000 00000000			
0xB0C00250	DMA0_C9 XXXXXXXX XXXXXXXX 00000000 00000000			
0xB0C00254	DMA0_D9 00000000 XXXXXXXX 00000000 XXXXXXXX			
0xB0C00258	DMA0_SASHDW9 00000000 00000000 00000000 00000000			
0xB0C0025C	DMA0_DASHDW9 00000000 00000000 00000000 00000000			
0xB0C00260- B0C0027C	reserved XXXXXXXX XXXXXXXX XXXXXXXX XXXXXXXX			
0xB0C00280	DMA0_A10 00000000 00001111 00000000 00000000			
0xB0C00284	DMA0_B10 00000000 00000000 00110011 01111111			
0xB0C00288	DMA0_SA10 00000000 00000000 00000000 00000000			
0xB0C0028C	DMA0_DA10 00000000 00000000 00000000 00000000			
0xB0C00290	DMA0_C10 XXXXXXXX XXXXXXXX 00000000 00000000			

Table 43. Memory Layout for the PERI5_AHB Registers (Continued)

Offset	+3	+2	+1	+0
0xB0C00294	DMA0_D10 00000000 XXXXXXXX 00000000 XXXXXXXX			
0xB0C00298	DMA0_SASHDW10 00000000 00000000 00000000 00000000			
0xB0C0029C	DMA0_DASHDW10 00000000 00000000 00000000 00000000			
0xB0C002A0- B0C002BC	reserved XXXXXXXX XXXXXXXX XXXXXXXX XXXXXXXX			
0xB0C002C0	DMA0_A11 00000000 00001111 00000000 00000000			
0xB0C002C4	DMA0_B11 00000000 00000000 00110011 01111111			
0xB0C002C8	DMA0_SA11 00000000 00000000 00000000 00000000			
0xB0C002CC	DMA0_DA11 00000000 00000000 00000000 00000000			
0xB0C002D0	DMA0_C11 XXXXXXXX XXXXXXXX 00000000 00000000			
0xB0C002D4	DMA0_D11 00000000 XXXXXXXX 00000000 XXXXXXXX			
0xB0C002D8	DMA0_SASHDW11 00000000 00000000 00000000 00000000			
0xB0C002DC	DMA0_DASHDW11 00000000 00000000 00000000 00000000			
0xB0C002E0- B0C002FC	reserved XXXXXXXX XXXXXXXX XXXXXXXX XXXXXXXX			
0xB0C00300	DMA0_A12 00000000 00001111 00000000 00000000			
0xB0C00304	DMA0_B12 00000000 00000000 00110011 01111111			
0xB0C00308	DMA0_SA12 00000000 00000000 00000000 00000000			
0xB0C0030C	DMA0_DA12 00000000 00000000 00000000 00000000			
0xB0C00310	DMA0_C12 XXXXXXXX XXXXXXXX 00000000 00000000			
0xB0C00314	DMA0_D12 00000000 XXXXXXXX 00000000 XXXXXXXX			
0xB0C00318	DMA0_SASHDW12 00000000 00000000 00000000 00000000			
0xB0C0031C	DMA0_DASHDW12 00000000 00000000 00000000 00000000			
0xB0C00320- B0C0033C	reserved XXXXXXXX XXXXXXXX XXXXXXXX XXXXXXXX			
0xB0C00340	DMA0_A13 00000000 00001111 00000000 00000000			
0xB0C00344	DMA0_B13 00000000 00000000 00110011 01111111			
0xB0C00348	DMA0_SA13 00000000 00000000 00000000 00000000			
0xB0C0034C	DMA0_DA13 00000000 00000000 00000000 00000000			

Table 43. Memory Layout for the PERI5_AHB Registers (Continued)

Offset	+3	+2	+1	+0
0xB0C00350	DMA0_C13 XXXXXXXX XXXXXXXX 00000000 00000000			
0xB0C00354	DMA0_D13 00000000 XXXXXXXX 00000000 XXXXXXXX			
0xB0C00358	DMA0_SASHDW13 00000000 00000000 00000000 00000000			
0xB0C0035C	DMA0_DASHDW13 00000000 00000000 00000000 00000000			
0xB0C00360- B0C0037C	reserved XXXXXXXX XXXXXXXX XXXXXXXX XXXXXXXX			
0xB0C00380	DMA0_A14 00000000 00001111 00000000 00000000			
0xB0C00384	DMA0_B14 00000000 00000000 00110011 01111111			
0xB0C00388	DMA0_SA14 00000000 00000000 00000000 00000000			
0xB0C0038C	DMA0_DA14 00000000 00000000 00000000 00000000			
0xB0C00390	DMA0_C14 XXXXXXXX XXXXXXXX 00000000 00000000			
0xB0C00394	DMA0_D14 00000000 XXXXXXXX 00000000 XXXXXXXX			
0xB0C00398	DMA0_SASHDW14 00000000 00000000 00000000 00000000			
0xB0C0039C	DMA0_DASHDW14 00000000 00000000 00000000 00000000			
0xB0C003A0- B0C003BC	reserved XXXXXXXX XXXXXXXX XXXXXXXX XXXXXXXX			
0xB0C003C0	DMA0_A15 00000000 00001111 00000000 00000000			
0xB0C003C4	DMA0_B15 00000000 00000000 00110011 01111111			
0xB0C003C8	DMA0_SA15 00000000 00000000 00000000 00000000			
0xB0C003CC	DMA0_DA15 00000000 00000000 00000000 00000000			
0xB0C003D0	DMA0_C15 XXXXXXXX XXXXXXXX 00000000 00000000			
0xB0C003D4	DMA0_D15 00000000 XXXXXXXX 00000000 XXXXXXXX			
0xB0C003D8	DMA0_SASHDW15 00000000 00000000 00000000 00000000			
0xB0C003DC	DMA0_DASHDW15 00000000 00000000 00000000 00000000			
0xB0C003E0- B0C003FC	reserved XXXXXXXX XXXXXXXX XXXXXXXX XXXXXXXX			
0xB0C00400	DMA0_A16 00000000 00001111 00000000 00000000			
0xB0C00404	DMA0_B16 00000000 00000000 00110011 01111111			
0xB0C00408	DMA0_SA16 00000000 00000000 00000000 00000000			

Table 43. Memory Layout for the PERI5_AHB Registers (Continued)

Offset	+3	+2	+1	+0
0xB0C0040C	DMA0_DA16 00000000 00000000 00000000 00000000			
0xB0C00410	DMA0_C16 XXXXXXXX XXXXXXXX 00000000 00000000			
0xB0C00414	DMA0_D16 00000000 XXXXXXXX 00000000 XXXXXXXX			
0xB0C00418	DMA0_SASHDW16 00000000 00000000 00000000 00000000			
0xB0C0041C	DMA0_DASHDW16 00000000 00000000 00000000 00000000			
0xB0C00420- B0C0043C	reserved XXXXXXXX XXXXXXXX XXXXXXXX XXXXXXXX			
0xB0C00440	DMA0_A17 00000000 00001111 00000000 00000000			
0xB0C00444	DMA0_B17 00000000 00000000 00110011 01111111			
0xB0C00448	DMA0_SA17 00000000 00000000 00000000 00000000			
0xB0C0044C	DMA0_DA17 00000000 00000000 00000000 00000000			
0xB0C00450	DMA0_C17 XXXXXXXX XXXXXXXX 00000000 00000000			
0xB0C00454	DMA0_D17 00000000 XXXXXXXX 00000000 XXXXXXXX			
0xB0C00458	DMA0_SASHDW17 00000000 00000000 00000000 00000000			
0xB0C0045C	DMA0_DASHDW17 00000000 00000000 00000000 00000000			
0xB0C00460- B0C0047C	reserved XXXXXXXX XXXXXXXX XXXXXXXX XXXXXXXX			
0xB0C00480	DMA0_A18 00000000 00001111 00000000 00000000			
0xB0C00484	DMA0_B18 00000000 00000000 00110011 01111111			
0xB0C00488	DMA0_SA18 00000000 00000000 00000000 00000000			
0xB0C0048C	DMA0_DA18 00000000 00000000 00000000 00000000			
0xB0C00490	DMA0_C18 XXXXXXXX XXXXXXXX 00000000 00000000			
0xB0C00494	DMA0_D18 00000000 XXXXXXXX 00000000 XXXXXXXX			
0xB0C00498	DMA0_SASHDW18 00000000 00000000 00000000 00000000			
0xB0C0049C	DMA0_DASHDW18 00000000 00000000 00000000 00000000			
0xB0C004A0- B0C004BC	reserved XXXXXXXX XXXXXXXX XXXXXXXX XXXXXXXX			
0xB0C004C0	DMA0_A19 00000000 00001111 00000000 00000000			
0xB0C004C4	DMA0_B19 00000000 00000000 00110011 01111111			

Table 43. Memory Layout for the PERI5_AHB Registers (Continued)

Offset	+3	+2	+1	+0
0xB0C004C8	DMA0_SA19 00000000 00000000 00000000 00000000			
0xB0C004CC	DMA0_DA19 00000000 00000000 00000000 00000000			
0xB0C004D0	DMA0_C19 XXXXXXXX XXXXXXXX 00000000 00000000			
0xB0C004D4	DMA0_D19 00000000 XXXXXXXX 00000000 XXXXXXXX			
0xB0C004D8	DMA0_SASHDW19 00000000 00000000 00000000 00000000			
0xB0C004DC	DMA0_DASHDW19 00000000 00000000 00000000 00000000			
0xB0C004E0- B0C004FC	reserved XXXXXXXX XXXXXXXX XXXXXXXX XXXXXXXX			
0xB0C00500	DMA0_A20 00000000 00001111 00000000 00000000			
0xB0C00504	DMA0_B20 00000000 00000000 00110011 01111111			
0xB0C00508	DMA0_SA20 00000000 00000000 00000000 00000000			
0xB0C0050C	DMA0_DA20 00000000 00000000 00000000 00000000			
0xB0C00510	DMA0_C20 XXXXXXXX XXXXXXXX 00000000 00000000			
0xB0C00514	DMA0_D20 00000000 XXXXXXXX 00000000 XXXXXXXX			
0xB0C00518	DMA0_SASHDW20 00000000 00000000 00000000 00000000			
0xB0C0051C	DMA0_DASHDW20 00000000 00000000 00000000 00000000			
0xB0C00520- B0C0053C	reserved XXXXXXXX XXXXXXXX XXXXXXXX XXXXXXXX			
0xB0C00540	DMA0_A21 00000000 00001111 00000000 00000000			
0xB0C00544	DMA0_B21 00000000 00000000 00110011 01111111			
0xB0C00548	DMA0_SA21 00000000 00000000 00000000 00000000			
0xB0C0054C	DMA0_DA21 00000000 00000000 00000000 00000000			
0xB0C00550	DMA0_C21 XXXXXXXX XXXXXXXX 00000000 00000000			
0xB0C00554	DMA0_D21 00000000 XXXXXXXX 00000000 XXXXXXXX			
0xB0C00558	DMA0_SASHDW21 00000000 00000000 00000000 00000000			
0xB0C0055C	DMA0_DASHDW21 00000000 00000000 00000000 00000000			
0xB0C00560- B0C0057C	reserved XXXXXXXX XXXXXXXX XXXXXXXX XXXXXXXX			
0xB0C00580	DMA0_A22 00000000 00001111 00000000 00000000			

Table 43. Memory Layout for the PERI5_AHB Registers (Continued)

Offset	+3	+2	+1	+0
0xB0C00584	DMA0_B22 00000000 00000000 00110011 01111111			
0xB0C00588	DMA0_SA22 00000000 00000000 00000000 00000000			
0xB0C0058C	DMA0_DA22 00000000 00000000 00000000 00000000			
0xB0C00590	DMA0_C22 XXXXXXXX XXXXXXXX 00000000 00000000			
0xB0C00594	DMA0_D22 00000000 XXXXXXXX 00000000 XXXXXXXX			
0xB0C00598	DMA0_SASHDW22 00000000 00000000 00000000 00000000			
0xB0C0059C	DMA0_DASHDW22 00000000 00000000 00000000 00000000			
0xB0C005A0- B0C005BC	reserved XXXXXXXX XXXXXXXX XXXXXXXX XXXXXXXX			
0xB0C005C0	DMA0_A23 00000000 00001111 00000000 00000000			
0xB0C005C4	DMA0_B23 00000000 00000000 00110011 01111111			
0xB0C005C8	DMA0_SA23 00000000 00000000 00000000 00000000			
0xB0C005CC	DMA0_DA23 00000000 00000000 00000000 00000000			
0xB0C005D0	DMA0_C23 XXXXXXXX XXXXXXXX 00000000 00000000			
0xB0C005D4	DMA0_D23 00000000 XXXXXXXX 00000000 XXXXXXXX			
0xB0C005D8	DMA0_SASHDW23 00000000 00000000 00000000 00000000			
0xB0C005DC	DMA0_DASHDW23 00000000 00000000 00000000 00000000			
0xB0C005E0- B0C005FC	reserved XXXXXXXX XXXXXXXX XXXXXXXX XXXXXXXX			
0xB0C00600	DMA0_A24 00000000 00001111 00000000 00000000			
0xB0C00604	DMA0_B24 00000000 00000000 00110011 01111111			
0xB0C00608	DMA0_SA24 00000000 00000000 00000000 00000000			
0xB0C0060C	DMA0_DA24 00000000 00000000 00000000 00000000			
0xB0C00610	DMA0_C24 XXXXXXXX XXXXXXXX 00000000 00000000			
0xB0C00614	DMA0_D24 00000000 XXXXXXXX 00000000 XXXXXXXX			
0xB0C00618	DMA0_SASHDW24 00000000 00000000 00000000 00000000			
0xB0C0061C	DMA0_DASHDW24 00000000 00000000 00000000 00000000			
0xB0C00620- B0C0063C	reserved XXXXXXXX XXXXXXXX XXXXXXXX XXXXXXXX			

Table 43. Memory Layout for the PERI5_AHB Registers (Continued)

Offset	+3	+2	+1	+0
0xB0C00640	DMA0_A25 00000000 00001111 00000000 00000000			
0xB0C00644	DMA0_B25 00000000 00000000 00110011 01111111			
0xB0C00648	DMA0_SA25 00000000 00000000 00000000 00000000			
0xB0C0064C	DMA0_DA25 00000000 00000000 00000000 00000000			
0xB0C00650	DMA0_C25 XXXXXXXX XXXXXXXX 00000000 00000000			
0xB0C00654	DMA0_D25 00000000 XXXXXXXX 00000000 XXXXXXXX			
0xB0C00658	DMA0_SASHDW25 00000000 00000000 00000000 00000000			
0xB0C0065C	DMA0_DASHDW25 00000000 00000000 00000000 00000000			
0xB0C00660- B0C0067C	reserved XXXXXXXX XXXXXXXX XXXXXXXX XXXXXXXX			
0xB0C00680	DMA0_A26 00000000 00001111 00000000 00000000			
0xB0C00684	DMA0_B26 00000000 00000000 00110011 01111111			
0xB0C00688	DMA0_SA26 00000000 00000000 00000000 00000000			
0xB0C0068C	DMA0_DA26 00000000 00000000 00000000 00000000			
0xB0C00690	DMA0_C26 XXXXXXXX XXXXXXXX 00000000 00000000			
0xB0C00694	DMA0_D26 00000000 XXXXXXXX 00000000 XXXXXXXX			
0xB0C00698	DMA0_SASHDW26 00000000 00000000 00000000 00000000			
0xB0C0069C	DMA0_DASHDW26 00000000 00000000 00000000 00000000			
0xB0C006A0- B0C006BC	reserved XXXXXXXX XXXXXXXX XXXXXXXX XXXXXXXX			
0xB0C006C0	DMA0_A27 00000000 00001111 00000000 00000000			
0xB0C006C4	DMA0_B27 00000000 00000000 00110011 01111111			
0xB0C006C8	DMA0_SA27 00000000 00000000 00000000 00000000			
0xB0C006CC	DMA0_DA27 00000000 00000000 00000000 00000000			
0xB0C006D0	DMA0_C27 XXXXXXXX XXXXXXXX 00000000 00000000			
0xB0C006D4	DMA0_D27 00000000 XXXXXXXX 00000000 XXXXXXXX			
0xB0C006D8	DMA0_SASHDW27 00000000 00000000 00000000 00000000			
0xB0C006DC	DMA0_DASHDW27 00000000 00000000 00000000 00000000			

Table 43. Memory Layout for the PERI5_AHB Registers (Continued)

Offset	+3	+2	+1	+0
0xB0C006E0- B0C006FC	reserved XXXXXXXX XXXXXXXX XXXXXXXX XXXXXXXX			
0xB0C00700	DMA0_A28 00000000 00001111 00000000 00000000			
0xB0C00704	DMA0_B28 00000000 00000000 00110011 01111111			
0xB0C00708	DMA0_SA28 00000000 00000000 00000000 00000000			
0xB0C0070C	DMA0_DA28 00000000 00000000 00000000 00000000			
0xB0C00710	DMA0_C28 XXXXXXXX XXXXXXXX 00000000 00000000			
0xB0C00714	DMA0_D28 00000000 XXXXXXXX 00000000 XXXXXXXX			
0xB0C00718	DMA0_SASHDW28 00000000 00000000 00000000 00000000			
0xB0C0071C	DMA0_DASHDW28 00000000 00000000 00000000 00000000			
0xB0C00720- B0C0073C	reserved XXXXXXXX XXXXXXXX XXXXXXXX XXXXXXXX			
0xB0C00740	DMA0_A29 00000000 00001111 00000000 00000000			
0xB0C00744	DMA0_B29 00000000 00000000 00110011 01111111			
0xB0C00748	DMA0_SA29 00000000 00000000 00000000 00000000			
0xB0C0074C	DMA0_DA29 00000000 00000000 00000000 00000000			
0xB0C00750	DMA0_C29 XXXXXXXX XXXXXXXX 00000000 00000000			
0xB0C00754	DMA0_D29 00000000 XXXXXXXX 00000000 XXXXXXXX			
0xB0C00758	DMA0_SASHDW29 00000000 00000000 00000000 00000000			
0xB0C0075C	DMA0_DASHDW29 00000000 00000000 00000000 00000000			
0xB0C00760- B0C0077C	reserved XXXXXXXX XXXXXXXX XXXXXXXX XXXXXXXX			
0xB0C00780	DMA0_A30 00000000 00001111 00000000 00000000			
0xB0C00784	DMA0_B30 00000000 00000000 00110011 01111111			
0xB0C00788	DMA0_SA30 00000000 00000000 00000000 00000000			
0xB0C0078C	DMA0_DA30 00000000 00000000 00000000 00000000			
0xB0C00790	DMA0_C30 XXXXXXXX XXXXXXXX 00000000 00000000			
0xB0C00794	DMA0_D30 00000000 XXXXXXXX 00000000 XXXXXXXX			
0xB0C00798	DMA0_SASHDW30 00000000 00000000 00000000 00000000			

Table 43. Memory Layout for the PERI5_AHB Registers (Continued)

Offset	+3	+2	+1	+0
0xB0C0079C	DMA0_DASHDW30 00000000 00000000 00000000 00000000			
0xB0C007A0- B0C007BC	reserved XXXXXXXX XXXXXXXX XXXXXXXX XXXXXXXX			
0xB0C007C0	DMA0_A31 00000000 00001111 00000000 00000000			
0xB0C007C4	DMA0_B31 00000000 00000000 00110011 01111111			
0xB0C007C8	DMA0_SA31 00000000 00000000 00000000 00000000			
0xB0C007CC	DMA0_DA31 00000000 00000000 00000000 00000000			
0xB0C007D0	DMA0_C31 XXXXXXXX XXXXXXXX 00000000 00000000			
0xB0C007D4	DMA0_D31 00000000 XXXXXXXX 00000000 XXXXXXXX			
0xB0C007D8	DMA0_SASHDW31 00000000 00000000 00000000 00000000			
0xB0C007DC	DMA0_DASHDW31 00000000 00000000 00000000 00000000			
0xB0C007E0- B0C007FC	reserved XXXXXXXX XXXXXXXX XXXXXXXX XXXXXXXX			
0xB0C00800	DMA0_A32 00000000 00001111 00000000 00000000			
0xB0C00804	DMA0_B32 00000000 00000000 00110011 01111111			
0xB0C00808	DMA0_SA32 00000000 00000000 00000000 00000000			
0xB0C0080C	DMA0_DA32 00000000 00000000 00000000 00000000			
0xB0C00810	DMA0_C32 XXXXXXXX XXXXXXXX 00000000 00000000			
0xB0C00814	DMA0_D32 00000000 XXXXXXXX 00000000 XXXXXXXX			
0xB0C00818	DMA0_SASHDW32 00000000 00000000 00000000 00000000			
0xB0C0081C	DMA0_DASHDW32 00000000 00000000 00000000 00000000			
0xB0C00820- B0C0083C	reserved XXXXXXXX XXXXXXXX XXXXXXXX XXXXXXXX			
0xB0C00840	DMA0_A33 00000000 00001111 00000000 00000000			
0xB0C00844	DMA0_B33 00000000 00000000 00110011 01111111			
0xB0C00848	DMA0_SA33 00000000 00000000 00000000 00000000			
0xB0C0084C	DMA0_DA33 00000000 00000000 00000000 00000000			
0xB0C00850	DMA0_C33 XXXXXXXX XXXXXXXX 00000000 00000000			
0xB0C00854	DMA0_D33 00000000 XXXXXXXX 00000000 XXXXXXXX			

Table 43. Memory Layout for the PERI5_AHB Registers (Continued)

Offset	+3	+2	+1	+0
0xB0C00858	DMA0_SASHDW33 00000000 00000000 00000000 00000000			
0xB0C0085C	DMA0_DASHDW33 00000000 00000000 00000000 00000000			
0xB0C00860- B0C0087C	reserved XXXXXXXX XXXXXXXX XXXXXXXX XXXXXXXX			
0xB0C00880	DMA0_A34 00000000 00001111 00000000 00000000			
0xB0C00884	DMA0_B34 00000000 00000000 00110011 01111111			
0xB0C00888	DMA0_SA34 00000000 00000000 00000000 00000000			
0xB0C0088C	DMA0_DA34 00000000 00000000 00000000 00000000			
0xB0C00890	DMA0_C34 XXXXXXXX XXXXXXXX 00000000 00000000			
0xB0C00894	DMA0_D34 00000000 XXXXXXXX 00000000 XXXXXXXX			
0xB0C00898	DMA0_SASHDW34 00000000 00000000 00000000 00000000			
0xB0C0089C	DMA0_DASHDW34 00000000 00000000 00000000 00000000			
0xB0C008A0- B0C008BC	reserved XXXXXXXX XXXXXXXX XXXXXXXX XXXXXXXX			
0xB0C008C0	DMA0_A35 00000000 00001111 00000000 00000000			
0xB0C008C4	DMA0_B35 00000000 00000000 00110011 01111111			
0xB0C008C8	DMA0_SA35 00000000 00000000 00000000 00000000			
0xB0C008CC	DMA0_DA35 00000000 00000000 00000000 00000000			
0xB0C008D0	DMA0_C35 XXXXXXXX XXXXXXXX 00000000 00000000			
0xB0C008D4	DMA0_D35 00000000 XXXXXXXX 00000000 XXXXXXXX			
0xB0C008D8	DMA0_SASHDW35 00000000 00000000 00000000 00000000			
0xB0C008DC	DMA0_DASHDW35 00000000 00000000 00000000 00000000			
0xB0C008E0- B0C008FC	reserved XXXXXXXX XXXXXXXX XXXXXXXX XXXXXXXX			
0xB0C00900	DMA0_A36 00000000 00001111 00000000 00000000			
0xB0C00904	DMA0_B36 00000000 00000000 00110011 01111111			
0xB0C00908	DMA0_SA36 00000000 00000000 00000000 00000000			
0xB0C0090C	DMA0_DA36 00000000 00000000 00000000 00000000			
0xB0C00910	DMA0_C36 XXXXXXXX XXXXXXXX 00000000 00000000			

Table 43. Memory Layout for the PERI5_AHB Registers (Continued)

Offset	+3	+2	+1	+0
0xB0C00914	DMA0_D36 00000000 XXXXXXXX 00000000 XXXXXXXX			
0xB0C00918	DMA0_SASHDW36 00000000 00000000 00000000 00000000			
0xB0C0091C	DMA0_DASHDW36 00000000 00000000 00000000 00000000			
0xB0C00920- B0C0093C	reserved XXXXXXXX XXXXXXXX XXXXXXXX XXXXXXXX			
0xB0C00940	DMA0_A37 00000000 00001111 00000000 00000000			
0xB0C00944	DMA0_B37 00000000 00000000 00110011 01111111			
0xB0C00948	DMA0_SA37 00000000 00000000 00000000 00000000			
0xB0C0094C	DMA0_DA37 00000000 00000000 00000000 00000000			
0xB0C00950	DMA0_C37 XXXXXXXX XXXXXXXX 00000000 00000000			
0xB0C00954	DMA0_D37 00000000 XXXXXXXX 00000000 XXXXXXXX			
0xB0C00958	DMA0_SASHDW37 00000000 00000000 00000000 00000000			
0xB0C0095C	DMA0_DASHDW37 00000000 00000000 00000000 00000000			
0xB0C00960- B0C0097C	reserved XXXXXXXX XXXXXXXX XXXXXXXX XXXXXXXX			
0xB0C00980	DMA0_A38 00000000 00001111 00000000 00000000			
0xB0C00984	DMA0_B38 00000000 00000000 00110011 01111111			
0xB0C00988	DMA0_SA38 00000000 00000000 00000000 00000000			
0xB0C0098C	DMA0_DA38 00000000 00000000 00000000 00000000			
0xB0C00990	DMA0_C38 XXXXXXXX XXXXXXXX 00000000 00000000			
0xB0C00994	DMA0_D38 00000000 XXXXXXXX 00000000 XXXXXXXX			
0xB0C00998	DMA0_SASHDW38 00000000 00000000 00000000 00000000			
0xB0C0099C	DMA0_DASHDW38 00000000 00000000 00000000 00000000			
0xB0C009A0- B0C009BC	reserved XXXXXXXX XXXXXXXX XXXXXXXX XXXXXXXX			
0xB0C009C0	DMA0_A39 00000000 00001111 00000000 00000000			
0xB0C009C4	DMA0_B39 00000000 00000000 00110011 01111111			
0xB0C009C8	DMA0_SA39 00000000 00000000 00000000 00000000			
0xB0C009CC	DMA0_DA39 00000000 00000000 00000000 00000000			

Table 43. Memory Layout for the PERI5_AHB Registers (Continued)

Offset	+3	+2	+1	+0
0xB0C009D0	DMA0_C39 XXXXXXXX XXXXXXXX 00000000 00000000			
0xB0C009D4	DMA0_D39 00000000 XXXXXXXX 00000000 XXXXXXXX			
0xB0C009D8	DMA0_SASHDW39 00000000 00000000 00000000 00000000			
0xB0C009DC	DMA0_DASHDW39 00000000 00000000 00000000 00000000			
0xB0C009E0- B0C009FC	reserved XXXXXXXX XXXXXXXX XXXXXXXX XXXXXXXX			
0xB0C00A00	DMA0_A40 00000000 00001111 00000000 00000000			
0xB0C00A04	DMA0_B40 00000000 00000000 00110011 01111111			
0xB0C00A08	DMA0_SA40 00000000 00000000 00000000 00000000			
0xB0C00A0C	DMA0_DA40 00000000 00000000 00000000 00000000			
0xB0C00A10	DMA0_C40 XXXXXXXX XXXXXXXX 00000000 00000000			
0xB0C00A14	DMA0_D40 00000000 XXXXXXXX 00000000 XXXXXXXX			
0xB0C00A18	DMA0_SASHDW40 00000000 00000000 00000000 00000000			
0xB0C00A1C	DMA0_DASHDW40 00000000 00000000 00000000 00000000			
0xB0C00A20- B0C00A3C	reserved XXXXXXXX XXXXXXXX XXXXXXXX XXXXXXXX			
0xB0C00A40	DMA0_A41 00000000 00001111 00000000 00000000			
0xB0C00A44	DMA0_B41 00000000 00000000 00110011 01111111			
0xB0C00A48	DMA0_SA41 00000000 00000000 00000000 00000000			
0xB0C00A4C	DMA0_DA41 00000000 00000000 00000000 00000000			
0xB0C00A50	DMA0_C41 XXXXXXXX XXXXXXXX 00000000 00000000			
0xB0C00A54	DMA0_D41 00000000 XXXXXXXX 00000000 XXXXXXXX			
0xB0C00A58	DMA0_SASHDW41 00000000 00000000 00000000 00000000			
0xB0C00A5C	DMA0_DASHDW41 00000000 00000000 00000000 00000000			
0xB0C00A60- B0C00A7C	reserved XXXXXXXX XXXXXXXX XXXXXXXX XXXXXXXX			
0xB0C00A80	DMA0_A42 00000000 00001111 00000000 00000000			
0xB0C00A84	DMA0_B42 00000000 00000000 00110011 01111111			
0xB0C00A88	DMA0_SA42 00000000 00000000 00000000 00000000			

Table 43. Memory Layout for the PERI5_AHB Registers (Continued)

Offset	+3	+2	+1	+0
0xB0C00A8C	DMA0_DA42 00000000 00000000 00000000 00000000			
0xB0C00A90	DMA0_C42 XXXXXXXX XXXXXXXX 00000000 00000000			
0xB0C00A94	DMA0_D42 00000000 XXXXXXXX 00000000 XXXXXXXX			
0xB0C00A98	DMA0_SASHDW42 00000000 00000000 00000000 00000000			
0xB0C00A9C	DMA0_DASHDW42 00000000 00000000 00000000 00000000			
0xB0C00AA0- B0C00ABC	reserved XXXXXXXX XXXXXXXX XXXXXXXX XXXXXXXX			
0xB0C00AC0	DMA0_A43 00000000 00001111 00000000 00000000			
0xB0C00AC4	DMA0_B43 00000000 00000000 00110011 01111111			
0xB0C00AC8	DMA0_SA43 00000000 00000000 00000000 00000000			
0xB0C00ACC	DMA0_DA43 00000000 00000000 00000000 00000000			
0xB0C00AD0	DMA0_C43 XXXXXXXX XXXXXXXX 00000000 00000000			
0xB0C00AD4	DMA0_D43 00000000 XXXXXXXX 00000000 XXXXXXXX			
0xB0C00AD8	DMA0_SASHDW43 00000000 00000000 00000000 00000000			
0xB0C00ADC	DMA0_DASHDW43 00000000 00000000 00000000 00000000			
0xB0C00AE0- B0C00AFC	reserved XXXXXXXX XXXXXXXX XXXXXXXX XXXXXXXX			
0xB0C00B00	DMA0_A44 00000000 00001111 00000000 00000000			
0xB0C00B04	DMA0_B44 00000000 00000000 00110011 01111111			
0xB0C00B08	DMA0_SA44 00000000 00000000 00000000 00000000			
0xB0C00B0C	DMA0_DA44 00000000 00000000 00000000 00000000			
0xB0C00B10	DMA0_C44 XXXXXXXX XXXXXXXX 00000000 00000000			
0xB0C00B14	DMA0_D44 00000000 XXXXXXXX 00000000 XXXXXXXX			
0xB0C00B18	DMA0_SASHDW44 00000000 00000000 00000000 00000000			
0xB0C00B1C	DMA0_DASHDW44 00000000 00000000 00000000 00000000			
0xB0C00B20- B0C00B3C	reserved XXXXXXXX XXXXXXXX XXXXXXXX XXXXXXXX			
0xB0C00B40	DMA0_A45 00000000 00001111 00000000 00000000			
0xB0C00B44	DMA0_B45 00000000 00000000 00110011 01111111			

Table 43. Memory Layout for the PERI5_AHB Registers (Continued)

Offset	+3	+2	+1	+0
0xB0C00B48	DMA0_SA45 00000000 00000000 00000000 00000000			
0xB0C00B4C	DMA0_DA45 00000000 00000000 00000000 00000000			
0xB0C00B50	DMA0_C45 XXXXXXXX XXXXXXXX 00000000 00000000			
0xB0C00B54	DMA0_D45 00000000 XXXXXXXX 00000000 XXXXXXXX			
0xB0C00B58	DMA0_SASHDW45 00000000 00000000 00000000 00000000			
0xB0C00B5C	DMA0_DASHDW45 00000000 00000000 00000000 00000000			
0xB0C00B60- B0C00B7C	reserved XXXXXXXX XXXXXXXX XXXXXXXX XXXXXXXX			
0xB0C00B80	DMA0_A46 00000000 00001111 00000000 00000000			
0xB0C00B84	DMA0_B46 00000000 00000000 00110011 01111111			
0xB0C00B88	DMA0_SA46 00000000 00000000 00000000 00000000			
0xB0C00B8C	DMA0_DA46 00000000 00000000 00000000 00000000			
0xB0C00B90	DMA0_C46 XXXXXXXX XXXXXXXX 00000000 00000000			
0xB0C00B94	DMA0_D46 00000000 XXXXXXXX 00000000 XXXXXXXX			
0xB0C00B98	DMA0_SASHDW46 00000000 00000000 00000000 00000000			
0xB0C00B9C	DMA0_DASHDW46 00000000 00000000 00000000 00000000			
0xB0C00BA0- B0C00BBC	reserved XXXXXXXX XXXXXXXX XXXXXXXX XXXXXXXX			
0xB0C00BC0	DMA0_A47 00000000 00001111 00000000 00000000			
0xB0C00BC4	DMA0_B47 00000000 00000000 00110011 01111111			
0xB0C00BC8	DMA0_SA47 00000000 00000000 00000000 00000000			
0xB0C00BCC	DMA0_DA47 00000000 00000000 00000000 00000000			
0xB0C00BD0	DMA0_C47 XXXXXXXX XXXXXXXX 00000000 00000000			
0xB0C00BD4	DMA0_D47 00000000 XXXXXXXX 00000000 XXXXXXXX			
0xB0C00BD8	DMA0_SASHDW47 00000000 00000000 00000000 00000000			
0xB0C00BDC	DMA0_DASHDW47 00000000 00000000 00000000 00000000			
0xB0C00BE0- B0C00BFC	reserved XXXXXXXX XXXXXXXX XXXXXXXX XXXXXXXX			
0xB0C00C00	DMA0_A48 00000000 00001111 00000000 00000000			

Table 43. Memory Layout for the PERI5_AHB Registers (Continued)

Offset	+3	+2	+1	+0
0xB0C00C04	DMA0_B48 00000000 00000000 00110011 01111111			
0xB0C00C08	DMA0_SA48 00000000 00000000 00000000 00000000			
0xB0C00C0C	DMA0_DA48 00000000 00000000 00000000 00000000			
0xB0C00C10	DMA0_C48 XXXXXXXX XXXXXXXX 00000000 00000000			
0xB0C00C14	DMA0_D48 00000000 XXXXXXXX 00000000 XXXXXXXX			
0xB0C00C18	DMA0_SASHDW48 00000000 00000000 00000000 00000000			
0xB0C00C1C	DMA0_DASHDW48 00000000 00000000 00000000 00000000			
0xB0C00C20- B0C00C3C	reserved XXXXXXXX XXXXXXXX XXXXXXXX XXXXXXXX			
0xB0C00C40	DMA0_A49 00000000 00001111 00000000 00000000			
0xB0C00C44	DMA0_B49 00000000 00000000 00110011 01111111			
0xB0C00C48	DMA0_SA49 00000000 00000000 00000000 00000000			
0xB0C00C4C	DMA0_DA49 00000000 00000000 00000000 00000000			
0xB0C00C50	DMA0_C49 XXXXXXXX XXXXXXXX 00000000 00000000			
0xB0C00C54	DMA0_D49 00000000 XXXXXXXX 00000000 XXXXXXXX			
0xB0C00C58	DMA0_SASHDW49 00000000 00000000 00000000 00000000			
0xB0C00C5C	DMA0_DASHDW49 00000000 00000000 00000000 00000000			
0xB0C00C60- B0C00C7C	reserved XXXXXXXX XXXXXXXX XXXXXXXX XXXXXXXX			
0xB0C00C80	DMA0_A50 00000000 00001111 00000000 00000000			
0xB0C00C84	DMA0_B50 00000000 00000000 00110011 01111111			
0xB0C00C88	DMA0_SA50 00000000 00000000 00000000 00000000			
0xB0C00C8C	DMA0_DA50 00000000 00000000 00000000 00000000			
0xB0C00C90	DMA0_C50 XXXXXXXX XXXXXXXX 00000000 00000000			
0xB0C00C94	DMA0_D50 00000000 XXXXXXXX 00000000 XXXXXXXX			
0xB0C00C98	DMA0_SASHDW50 00000000 00000000 00000000 00000000			
0xB0C00C9C	DMA0_DASHDW50 00000000 00000000 00000000 00000000			
0xB0C00CA0- B0C00CBC	reserved XXXXXXXX XXXXXXXX XXXXXXXX XXXXXXXX			

Table 43. Memory Layout for the PERI5_AHB Registers (Continued)

Offset	+3	+2	+1	+0
0xB0C00CC0	DMA0_A51 00000000 00001111 00000000 00000000			
0xB0C00CC4	DMA0_B51 00000000 00000000 00110011 01111111			
0xB0C00CC8	DMA0_SA51 00000000 00000000 00000000 00000000			
0xB0C00CCC	DMA0_DA51 00000000 00000000 00000000 00000000			
0xB0C00CD0	DMA0_C51 XXXXXXXX XXXXXXXX 00000000 00000000			
0xB0C00CD4	DMA0_D51 00000000 XXXXXXXX 00000000 XXXXXXXX			
0xB0C00CD8	DMA0_SASHDW51 00000000 00000000 00000000 00000000			
0xB0C00CDC	DMA0_DASHDW51 00000000 00000000 00000000 00000000			
0xB0C00CE0- B0C00CFC	reserved XXXXXXXX XXXXXXXX XXXXXXXX XXXXXXXX			
0xB0C00D00	DMA0_A52 00000000 00001111 00000000 00000000			
0xB0C00D04	DMA0_B52 00000000 00000000 00110011 01111111			
0xB0C00D08	DMA0_SA52 00000000 00000000 00000000 00000000			
0xB0C00D0C	DMA0_DA52 00000000 00000000 00000000 00000000			
0xB0C00D10	DMA0_C52 XXXXXXXX XXXXXXXX 00000000 00000000			
0xB0C00D14	DMA0_D52 00000000 XXXXXXXX 00000000 XXXXXXXX			
0xB0C00D18	DMA0_SASHDW52 00000000 00000000 00000000 00000000			
0xB0C00D1C	DMA0_DASHDW52 00000000 00000000 00000000 00000000			
0xB0C00D20- B0C00D3C	reserved XXXXXXXX XXXXXXXX XXXXXXXX XXXXXXXX			
0xB0C00D40	DMA0_A53 00000000 00001111 00000000 00000000			
0xB0C00D44	DMA0_B53 00000000 00000000 00110011 01111111			
0xB0C00D48	DMA0_SA53 00000000 00000000 00000000 00000000			
0xB0C00D4C	DMA0_DA53 00000000 00000000 00000000 00000000			
0xB0C00D50	DMA0_C53 XXXXXXXX XXXXXXXX 00000000 00000000			
0xB0C00D54	DMA0_D53 00000000 XXXXXXXX 00000000 XXXXXXXX			
0xB0C00D58	DMA0_SASHDW53 00000000 00000000 00000000 00000000			
0xB0C00D5C	DMA0_DASHDW53 00000000 00000000 00000000 00000000			

Table 43. Memory Layout for the PERI5_AHB Registers (Continued)

Offset	+3	+2	+1	+0
0xB0C00D60- B0C00D7C	reserved XXXXXXXX XXXXXXXX XXXXXXXX XXXXXXXX			
0xB0C00D80	DMA0_A54 00000000 00001111 00000000 00000000			
0xB0C00D84	DMA0_B54 00000000 00000000 00110011 01111111			
0xB0C00D88	DMA0_SA54 00000000 00000000 00000000 00000000			
0xB0C00D8C	DMA0_DA54 00000000 00000000 00000000 00000000			
0xB0C00D90	DMA0_C54 XXXXXXXX XXXXXXXX 00000000 00000000			
0xB0C00D94	DMA0_D54 00000000 XXXXXXXX 00000000 XXXXXXXX			
0xB0C00D98	DMA0_SASHDW54 00000000 00000000 00000000 00000000			
0xB0C00D9C	DMA0_DASHDW54 00000000 00000000 00000000 00000000			
0xB0C00DA0- B0C00DBC	reserved XXXXXXXX XXXXXXXX XXXXXXXX XXXXXXXX			
0xB0C00DC0	DMA0_A55 00000000 00001111 00000000 00000000			
0xB0C00DC4	DMA0_B55 00000000 00000000 00110011 01111111			
0xB0C00DC8	DMA0_SA55 00000000 00000000 00000000 00000000			
0xB0C00DCC	DMA0_DA55 00000000 00000000 00000000 00000000			
0xB0C00DD0	DMA0_C55 XXXXXXXX XXXXXXXX 00000000 00000000			
0xB0C00DD4	DMA0_D55 00000000 XXXXXXXX 00000000 XXXXXXXX			
0xB0C00DD8	DMA0_SASHDW55 00000000 00000000 00000000 00000000			
0xB0C00DDC	DMA0_DASHDW55 00000000 00000000 00000000 00000000			
0xB0C00DE0- B0C00DFC	reserved XXXXXXXX XXXXXXXX XXXXXXXX XXXXXXXX			
0xB0C00E00	DMA0_A56 00000000 00001111 00000000 00000000			
0xB0C00E04	DMA0_B56 00000000 00000000 00110011 01111111			
0xB0C00E08	DMA0_SA56 00000000 00000000 00000000 00000000			
0xB0C00E0C	DMA0_DA56 00000000 00000000 00000000 00000000			
0xB0C00E10	DMA0_C56 XXXXXXXX XXXXXXXX 00000000 00000000			
0xB0C00E14	DMA0_D56 00000000 XXXXXXXX 00000000 XXXXXXXX			
0xB0C00E18	DMA0_SASHDW56 00000000 00000000 00000000 00000000			

Table 43. Memory Layout for the PERI5_AHB Registers (Continued)

Offset	+3	+2	+1	+0
0xB0C00E1C	DMA0_DASHDW56 00000000 00000000 00000000 00000000			
0xB0C00E20- B0C00E3C	reserved XXXXXXXX XXXXXXXX XXXXXXXX XXXXXXXX			
0xB0C00E40	DMA0_A57 00000000 00001111 00000000 00000000			
0xB0C00E44	DMA0_B57 00000000 00000000 00110011 01111111			
0xB0C00E48	DMA0_SA57 00000000 00000000 00000000 00000000			
0xB0C00E4C	DMA0_DA57 00000000 00000000 00000000 00000000			
0xB0C00E50	DMA0_C57 XXXXXXXX XXXXXXXX 00000000 00000000			
0xB0C00E54	DMA0_D57 00000000 XXXXXXXX 00000000 XXXXXXXX			
0xB0C00E58	DMA0_SASHDW57 00000000 00000000 00000000 00000000			
0xB0C00E5C	DMA0_DASHDW57 00000000 00000000 00000000 00000000			
0xB0C00E60- B0C00E7C	reserved XXXXXXXX XXXXXXXX XXXXXXXX XXXXXXXX			
0xB0C00E80	DMA0_A58 00000000 00001111 00000000 00000000			
0xB0C00E84	DMA0_B58 00000000 00000000 00110011 01111111			
0xB0C00E88	DMA0_SA58 00000000 00000000 00000000 00000000			
0xB0C00E8C	DMA0_DA58 00000000 00000000 00000000 00000000			
0xB0C00E90	DMA0_C58 XXXXXXXX XXXXXXXX 00000000 00000000			
0xB0C00E94	DMA0_D58 00000000 XXXXXXXX 00000000 XXXXXXXX			
0xB0C00E98	DMA0_SASHDW58 00000000 00000000 00000000 00000000			
0xB0C00E9C	DMA0_DASHDW58 00000000 00000000 00000000 00000000			
0xB0C00EA0- B0C00EBC	reserved XXXXXXXX XXXXXXXX XXXXXXXX XXXXXXXX			
0xB0C00EC0	DMA0_A59 00000000 00001111 00000000 00000000			
0xB0C00EC4	DMA0_B59 00000000 00000000 00110011 01111111			
0xB0C00EC8	DMA0_SA59 00000000 00000000 00000000 00000000			
0xB0C00ECC	DMA0_DA59 00000000 00000000 00000000 00000000			
0xB0C00ED0	DMA0_C59 XXXXXXXX XXXXXXXX 00000000 00000000			
0xB0C00ED4	DMA0_D59 00000000 XXXXXXXX 00000000 XXXXXXXX			

Table 43. Memory Layout for the PERI5_AHB Registers (Continued)

Offset	+3	+2	+1	+0
0xB0C00ED8	DMA0_SASHDW59 00000000 00000000 00000000 00000000			
0xB0C00EDC	DMA0_DASHDW59 00000000 00000000 00000000 00000000			
0xB0C00EE0- B0C00EFC	reserved XXXXXXXX XXXXXXXX XXXXXXXX XXXXXXXX			
0xB0C00F00	DMA0_A60 00000000 00001111 00000000 00000000			
0xB0C00F04	DMA0_B60 00000000 00000000 00110011 01111111			
0xB0C00F08	DMA0_SA60 00000000 00000000 00000000 00000000			
0xB0C00F0C	DMA0_DA60 00000000 00000000 00000000 00000000			
0xB0C00F10	DMA0_C60 XXXXXXXX XXXXXXXX 00000000 00000000			
0xB0C00F14	DMA0_D60 00000000 XXXXXXXX 00000000 XXXXXXXX			
0xB0C00F18	DMA0_SASHDW60 00000000 00000000 00000000 00000000			
0xB0C00F1C	DMA0_DASHDW60 00000000 00000000 00000000 00000000			
0xB0C00F20- B0C00F3C	reserved XXXXXXXX XXXXXXXX XXXXXXXX XXXXXXXX			
0xB0C00F40	DMA0_A61 00000000 00001111 00000000 00000000			
0xB0C00F44	DMA0_B61 00000000 00000000 00110011 01111111			
0xB0C00F48	DMA0_SA61 00000000 00000000 00000000 00000000			
0xB0C00F4C	DMA0_DA61 00000000 00000000 00000000 00000000			
0xB0C00F50	DMA0_C61 XXXXXXXX XXXXXXXX 00000000 00000000			
0xB0C00F54	DMA0_D61 00000000 XXXXXXXX 00000000 XXXXXXXX			
0xB0C00F58	DMA0_SASHDW61 00000000 00000000 00000000 00000000			
0xB0C00F5C	DMA0_DASHDW61 00000000 00000000 00000000 00000000			
0xB0C00F60- B0C00F7C	reserved XXXXXXXX XXXXXXXX XXXXXXXX XXXXXXXX			
0xB0C00F80	DMA0_A62 00000000 00001111 00000000 00000000			
0xB0C00F84	DMA0_B62 00000000 00000000 00110011 01111111			
0xB0C00F88	DMA0_SA62 00000000 00000000 00000000 00000000			
0xB0C00F8C	DMA0_DA62 00000000 00000000 00000000 00000000			
0xB0C00F90	DMA0_C62 XXXXXXXX XXXXXXXX 00000000 00000000			

Table 43. Memory Layout for the PERI5_AHB Registers (Continued)

Offset	+3	+2	+1	+0
0xB0C00F94	DMA0_D62 00000000 XXXXXXXX 00000000 XXXXXXXX			
0xB0C00F98	DMA0_SASHDW62 00000000 00000000 00000000 00000000			
0xB0C00F9C	DMA0_DASHDW62 00000000 00000000 00000000 00000000			
0xB0C00FA0- B0C00FBC	reserved XXXXXXXX XXXXXXXX XXXXXXXX XXXXXXXX			
0xB0C00FC0	DMA0_A63 00000000 00001111 00000000 00000000			
0xB0C00FC4	DMA0_B63 00000000 00000000 00110011 01111111			
0xB0C00FC8	DMA0_SA63 00000000 00000000 00000000 00000000			
0xB0C00FCC	DMA0_DA63 00000000 00000000 00000000 00000000			
0xB0C00FD0	DMA0_C63 XXXXXXXX XXXXXXXX 00000000 00000000			
0xB0C00FD4	DMA0_D63 00000000 XXXXXXXX 00000000 XXXXXXXX			
0xB0C00FD8	DMA0_SASHDW63 00000000 00000000 00000000 00000000			
0xB0C00FDC	DMA0_DASHDW63 00000000 00000000 00000000 00000000			
0xB0C00FE0- B0C00FFC	reserved XXXXXXXX XXXXXXXX XXXXXXXX XXXXXXXX			
0xB0C01000	DMA0_R 01000000 XXXXXXXX XXXXXXXX 00000001			
0xB0C01004	DMA0_DIRQ1 00000000 00000000 00000000 00000000			
0xB0C01008	DMA0_DIRQ2 00000000 00000000 00000000 00000000			
0xB0C0100C	DMA0_EDIRQ1 00000000 00000000 00000000 00000000			
0xB0C01010	DMA0_EDIRQ2 00000000 00000000 00000000 00000000			
0xB0C01014	DMA0_ID 00000000 00000000 00000000 00000000			
0xB0C01018- B0C01FFC	reserved XXXXXXXX XXXXXXXX XXXXXXXX XXXXXXXX			
0xB0C02000	DMA0_CMECIC0 00000000 00000000 XXXXXXXX 00000000			
0xB0C02004	DMA0_CMECIC1 00000000 00000000 XXXXXXXX 00000000			
0xB0C02008	DMA0_CMECIC2 00000000 00000000 XXXXXXXX 00000000			
0xB0C0200C	DMA0_CMECIC3 00000000 00000000 XXXXXXXX 00000000			
0xB0C02010	DMA0_CMECIC4 00000000 00000000 XXXXXXXX 00000000			
0xB0C02014	DMA0_CMECIC5 00000000 00000000 XXXXXXXX 00000000			

Table 43. Memory Layout for the PERI5_AHB Registers (Continued)

Offset	+3	+2	+1	+0
0xB0C02018	DMA0_CMECIC6 00000000 00000000 XXXXXXXX 00000000			
0xB0C0201C	DMA0_CMECIC7 00000000 00000000 XXXXXXXX 00000000			
0xB0C02020	DMA0_CMICIC0 00000000 XXXXXXXX XXXXXXXX XXXXXXXX			
0xB0C02024	DMA0_CMICIC1 00000000 XXXXXXXX XXXXXXXX XXXXXXXX			
0xB0C02028	DMA0_CMICIC2 00000000 XXXXXXXX XXXXXXXX XXXXXXXX			
0xB0C0202C	DMA0_CMICIC3 00000000 XXXXXXXX XXXXXXXX XXXXXXXX			
0xB0C02030	DMA0_CMICIC4 00000000 XXXXXXXX XXXXXXXX XXXXXXXX			
0xB0C02034	DMA0_CMICIC5 00000000 XXXXXXXX XXXXXXXX XXXXXXXX			
0xB0C02038	DMA0_CMICIC6 00000000 XXXXXXXX XXXXXXXX XXXXXXXX			
0xB0C0203C	DMA0_CMICIC7 00000000 XXXXXXXX XXXXXXXX XXXXXXXX			
0xB0C02040	DMA0_CMICIC8 00000000 XXXXXXXX XXXXXXXX XXXXXXXX			
0xB0C02044	DMA0_CMICIC9 00000000 XXXXXXXX XXXXXXXX XXXXXXXX			
0xB0C02048	DMA0_CMICIC10 00000000 XXXXXXXX XXXXXXXX XXXXXXXX			
0xB0C0204C	DMA0_CMICIC11 00000000 XXXXXXXX XXXXXXXX XXXXXXXX			
0xB0C02050	DMA0_CMICIC12 00000000 XXXXXXXX XXXXXXXX XXXXXXXX			
0xB0C02054	DMA0_CMICIC13 00000000 XXXXXXXX XXXXXXXX XXXXXXXX			
0xB0C02058	DMA0_CMICIC14 00000000 XXXXXXXX XXXXXXXX XXXXXXXX			
0xB0C0205C	DMA0_CMICIC15 00000000 XXXXXXXX XXXXXXXX XXXXXXXX			
0xB0C02060	DMA0_CMICIC16 00000000 XXXXXXXX XXXXXXXX XXXXXXXX			
0xB0C02064	DMA0_CMICIC17 00000000 XXXXXXXX XXXXXXXX XXXXXXXX			
0xB0C02068	DMA0_CMICIC18 00000000 XXXXXXXX XXXXXXXX XXXXXXXX			
0xB0C0206C	DMA0_CMICIC19 00000000 XXXXXXXX XXXXXXXX XXXXXXXX			
0xB0C02070	DMA0_CMICIC20 00000000 XXXXXXXX XXXXXXXX XXXXXXXX			
0xB0C02074	DMA0_CMICIC21 00000000 XXXXXXXX XXXXXXXX XXXXXXXX			
0xB0C02078	DMA0_CMICIC22 00000000 XXXXXXXX XXXXXXXX XXXXXXXX			
0xB0C0207C	DMA0_CMICIC23 00000000 XXXXXXXX XXXXXXXX XXXXXXXX			

Table 43. Memory Layout for the PERI5_AHB Registers (Continued)

Offset	+3	+2	+1	+0
0xB0C02080	DMA0_CMICIC24 00000000 XXXXXXXX XXXXXXXX XXXXXXXX			
0xB0C02084	DMA0_CMICIC25 00000000 XXXXXXXX XXXXXXXX XXXXXXXX			
0xB0C02088	DMA0_CMICIC26 00000000 XXXXXXXX XXXXXXXX XXXXXXXX			
0xB0C0208C	DMA0_CMICIC27 00000000 XXXXXXXX XXXXXXXX XXXXXXXX			
0xB0C02090	DMA0_CMICIC28 00000000 XXXXXXXX XXXXXXXX XXXXXXXX			
0xB0C02094	DMA0_CMICIC29 00000000 XXXXXXXX XXXXXXXX XXXXXXXX			
0xB0C02098	DMA0_CMICIC30 00000000 XXXXXXXX XXXXXXXX XXXXXXXX			
0xB0C0209C	DMA0_CMICIC31 00000000 XXXXXXXX XXXXXXXX XXXXXXXX			
0xB0C020A0	DMA0_CMICIC32 00000000 XXXXXXXX XXXXXXXX XXXXXXXX			
0xB0C020A4	DMA0_CMICIC33 00000000 XXXXXXXX XXXXXXXX XXXXXXXX			
0xB0C020A8	DMA0_CMICIC34 00000000 XXXXXXXX XXXXXXXX XXXXXXXX			
0xB0C020AC	DMA0_CMICIC35 00000000 XXXXXXXX XXXXXXXX XXXXXXXX			
0xB0C020B0	DMA0_CMICIC36 00000000 XXXXXXXX XXXXXXXX XXXXXXXX			
0xB0C020B4	DMA0_CMICIC37 00000000 XXXXXXXX XXXXXXXX XXXXXXXX			
0xB0C020B8	DMA0_CMICIC38 00000000 XXXXXXXX XXXXXXXX XXXXXXXX			
0xB0C020BC	DMA0_CMICIC39 00000000 XXXXXXXX XXXXXXXX XXXXXXXX			
0xB0C020C0	DMA0_CMICIC40 00000000 XXXXXXXX XXXXXXXX XXXXXXXX			
0xB0C020C4	DMA0_CMICIC41 00000000 XXXXXXXX XXXXXXXX XXXXXXXX			
0xB0C020C8	DMA0_CMICIC42 00000000 XXXXXXXX XXXXXXXX XXXXXXXX			
0xB0C020CC	DMA0_CMICIC43 00000000 XXXXXXXX XXXXXXXX XXXXXXXX			
0xB0C020D0	DMA0_CMICIC44 00000000 XXXXXXXX XXXXXXXX XXXXXXXX			
0xB0C020D4	DMA0_CMICIC45 00000000 XXXXXXXX XXXXXXXX XXXXXXXX			
0xB0C020D8	DMA0_CMICIC46 00000000 XXXXXXXX XXXXXXXX XXXXXXXX			
0xB0C020DC	DMA0_CMICIC47 00000000 XXXXXXXX XXXXXXXX XXXXXXXX			
0xB0C020E0	DMA0_CMICIC48 00000000 XXXXXXXX XXXXXXXX XXXXXXXX			
0xB0C020E4	DMA0_CMICIC49 00000000 XXXXXXXX XXXXXXXX XXXXXXXX			

Table 43. Memory Layout for the PERI5_AHB Registers (Continued)

Offset	+3	+2	+1	+0
0xB0C020E8	DMA0_CMICIC50 00000000 XXXXXXXX XXXXXXXX XXXXXXXX			
0xB0C020EC	DMA0_CMICIC51 00000000 XXXXXXXX XXXXXXXX XXXXXXXX			
0xB0C020F0	DMA0_CMICIC52 00000000 XXXXXXXX XXXXXXXX XXXXXXXX			
0xB0C020F4	DMA0_CMICIC53 00000000 XXXXXXXX XXXXXXXX XXXXXXXX			
0xB0C020F8	DMA0_CMICIC54 00000000 XXXXXXXX XXXXXXXX XXXXXXXX			
0xB0C020FC	DMA0_CMICIC55 00000000 XXXXXXXX XXXXXXXX XXXXXXXX			
0xB0C02100	DMA0_CMICIC56 00000000 XXXXXXXX XXXXXXXX XXXXXXXX			
0xB0C02104	DMA0_CMICIC57 00000000 XXXXXXXX XXXXXXXX XXXXXXXX			
0xB0C02108	DMA0_CMICIC58 00000000 XXXXXXXX XXXXXXXX XXXXXXXX			
0xB0C0210C	DMA0_CMICIC59 00000000 XXXXXXXX XXXXXXXX XXXXXXXX			
0xB0C02110	DMA0_CMICIC60 00000000 XXXXXXXX XXXXXXXX XXXXXXXX			
0xB0C02114	DMA0_CMICIC61 00000000 XXXXXXXX XXXXXXXX XXXXXXXX			
0xB0C02118	DMA0_CMICIC62 00000000 XXXXXXXX XXXXXXXX XXXXXXXX			
0xB0C0211C	DMA0_CMICIC63 00000000 XXXXXXXX XXXXXXXX XXXXXXXX			
0xB0C02120	DMA0_CMICIC64 00000000 XXXXXXXX XXXXXXXX XXXXXXXX			
0xB0C02124	DMA0_CMICIC65 00000000 XXXXXXXX XXXXXXXX XXXXXXXX			
0xB0C02128	DMA0_CMICIC66 00000000 XXXXXXXX XXXXXXXX XXXXXXXX			
0xB0C0212C	DMA0_CMICIC67 00000000 XXXXXXXX XXXXXXXX XXXXXXXX			
0xB0C02130	DMA0_CMICIC68 00000000 XXXXXXXX XXXXXXXX XXXXXXXX			
0xB0C02134	DMA0_CMICIC69 00000000 XXXXXXXX XXXXXXXX XXXXXXXX			
0xB0C02138	DMA0_CMICIC70 00000000 XXXXXXXX XXXXXXXX XXXXXXXX			
0xB0C0213C	DMA0_CMICIC71 00000000 XXXXXXXX XXXXXXXX XXXXXXXX			
0xB0C02140	DMA0_CMICIC72 00000000 XXXXXXXX XXXXXXXX XXXXXXXX			
0xB0C02144	DMA0_CMICIC73 00000000 XXXXXXXX XXXXXXXX XXXXXXXX			
0xB0C02148	DMA0_CMICIC74 00000000 XXXXXXXX XXXXXXXX XXXXXXXX			
0xB0C0214C	DMA0_CMICIC75 00000000 XXXXXXXX XXXXXXXX XXXXXXXX			

Table 43. Memory Layout for the PERI5_AHB Registers (Continued)

Offset	+3	+2	+1	+0
0xB0C02150	DMA0_CMICIC76 00000000 XXXXXXXX XXXXXXXX XXXXXXXX			
0xB0C02154	DMA0_CMICIC77 00000000 XXXXXXXX XXXXXXXX XXXXXXXX			
0xB0C02158	DMA0_CMICIC78 00000000 XXXXXXXX XXXXXXXX XXXXXXXX			
0xB0C0215C	DMA0_CMICIC79 00000000 XXXXXXXX XXXXXXXX XXXXXXXX			
0xB0C02160	DMA0_CMICIC80 00000000 XXXXXXXX XXXXXXXX XXXXXXXX			
0xB0C02164	DMA0_CMICIC81 00000000 XXXXXXXX XXXXXXXX XXXXXXXX			
0xB0C02168	DMA0_CMICIC82 00000000 XXXXXXXX XXXXXXXX XXXXXXXX			
0xB0C0216C	DMA0_CMICIC83 00000000 XXXXXXXX XXXXXXXX XXXXXXXX			
0xB0C02170	DMA0_CMICIC84 00000000 XXXXXXXX XXXXXXXX XXXXXXXX			
0xB0C02174	DMA0_CMICIC85 00000000 XXXXXXXX XXXXXXXX XXXXXXXX			
0xB0C02178	DMA0_CMICIC86 00000000 XXXXXXXX XXXXXXXX XXXXXXXX			
0xB0C0217C	DMA0_CMICIC87 00000000 XXXXXXXX XXXXXXXX XXXXXXXX			
0xB0C02180	DMA0_CMICIC88 00000000 XXXXXXXX XXXXXXXX XXXXXXXX			
0xB0C02184	DMA0_CMICIC89 00000000 XXXXXXXX XXXXXXXX XXXXXXXX			
0xB0C02188	DMA0_CMICIC90 00000000 XXXXXXXX XXXXXXXX XXXXXXXX			
0xB0C0218C	DMA0_CMICIC91 00000000 XXXXXXXX XXXXXXXX XXXXXXXX			
0xB0C02190	DMA0_CMICIC92 00000000 XXXXXXXX XXXXXXXX XXXXXXXX			
0xB0C02194	DMA0_CMICIC93 00000000 XXXXXXXX XXXXXXXX XXXXXXXX			
0xB0C02198	DMA0_CMICIC94 00000000 XXXXXXXX XXXXXXXX XXXXXXXX			
0xB0C0219C	DMA0_CMICIC95 00000000 XXXXXXXX XXXXXXXX XXXXXXXX			
0xB0C021A0	DMA0_CMICIC96 00000000 XXXXXXXX XXXXXXXX XXXXXXXX			
0xB0C021A4	DMA0_CMICIC97 00000000 XXXXXXXX XXXXXXXX XXXXXXXX			
0xB0C021A8	DMA0_CMICIC98 00000000 XXXXXXXX XXXXXXXX XXXXXXXX			
0xB0C021AC	DMA0_CMICIC99 00000000 XXXXXXXX XXXXXXXX XXXXXXXX			
0xB0C021B0	DMA0_CMICIC100 00000000 XXXXXXXX XXXXXXXX XXXXXXXX			
0xB0C021B4	DMA0_CMICIC101 00000000 XXXXXXXX XXXXXXXX XXXXXXXX			

Table 43. Memory Layout for the PERI5_AHB Registers (Continued)

Offset	+3	+2	+1	+0
0xB0C021B8	DMA0_CMICIC102 00000000 XXXXXXXX XXXXXXXX XXXXXXXX			
0xB0C021BC	DMA0_CMICIC103 00000000 XXXXXXXX XXXXXXXX XXXXXXXX			
0xB0C021C0	DMA0_CMICIC104 00000000 XXXXXXXX XXXXXXXX XXXXXXXX			
0xB0C021C4	DMA0_CMICIC105 00000000 XXXXXXXX XXXXXXXX XXXXXXXX			
0xB0C021C8	DMA0_CMICIC106 00000000 XXXXXXXX XXXXXXXX XXXXXXXX			
0xB0C021CC	DMA0_CMICIC107 00000000 XXXXXXXX XXXXXXXX XXXXXXXX			
0xB0C021D0	DMA0_CMICIC108 00000000 XXXXXXXX XXXXXXXX XXXXXXXX			
0xB0C021D4	DMA0_CMICIC109 00000000 XXXXXXXX XXXXXXXX XXXXXXXX			
0xB0C021D8	DMA0_CMICIC110 00000000 XXXXXXXX XXXXXXXX XXXXXXXX			
0xB0C021DC	DMA0_CMICIC111 00000000 XXXXXXXX XXXXXXXX XXXXXXXX			
0xB0C021E0	DMA0_CMICIC112 00000000 XXXXXXXX XXXXXXXX XXXXXXXX			
0xB0C021E4	DMA0_CMICIC113 00000000 XXXXXXXX XXXXXXXX XXXXXXXX			
0xB0C021E8	DMA0_CMICIC114 00000000 XXXXXXXX XXXXXXXX XXXXXXXX			
0xB0C021EC	DMA0_CMICIC115 00000000 XXXXXXXX XXXXXXXX XXXXXXXX			
0xB0C021F0	DMA0_CMICIC116 00000000 XXXXXXXX XXXXXXXX XXXXXXXX			
0xB0C021F4	DMA0_CMICIC117 00000000 XXXXXXXX XXXXXXXX XXXXXXXX			
0xB0C021F8	DMA0_CMICIC118 00000000 XXXXXXXX XXXXXXXX XXXXXXXX			
0xB0C021FC	DMA0_CMICIC119 00000000 XXXXXXXX XXXXXXXX XXXXXXXX			
0xB0C02200	DMA0_CMICIC120 00000000 XXXXXXXX XXXXXXXX XXXXXXXX			
0xB0C02204	DMA0_CMICIC121 00000000 XXXXXXXX XXXXXXXX XXXXXXXX			
0xB0C02208	DMA0_CMICIC122 00000000 XXXXXXXX XXXXXXXX XXXXXXXX			
0xB0C0220C	DMA0_CMICIC123 00000000 XXXXXXXX XXXXXXXX XXXXXXXX			
0xB0C02210	DMA0_CMICIC124 00000000 XXXXXXXX XXXXXXXX XXXXXXXX			
0xB0C02214	DMA0_CMICIC125 00000000 XXXXXXXX XXXXXXXX XXXXXXXX			
0xB0C02218	DMA0_CMICIC126 00000000 XXXXXXXX XXXXXXXX XXXXXXXX			
0xB0C0221C	DMA0_CMICIC127 00000000 XXXXXXXX XXXXXXXX XXXXXXXX			

Table 43. Memory Layout for the PERI5_AHB Registers (Continued)

Offset	+3	+2	+1	+0
0xB0C02220	DMA0_CMICIC128 00000000 XXXXXXXX XXXXXXXX XXXXXXXX			
0xB0C02224	DMA0_CMICIC129 00000000 XXXXXXXX XXXXXXXX XXXXXXXX			
0xB0C02228	DMA0_CMICIC130 00000000 XXXXXXXX XXXXXXXX XXXXXXXX			
0xB0C0222C	DMA0_CMICIC131 00000000 XXXXXXXX XXXXXXXX XXXXXXXX			
0xB0C02230	DMA0_CMICIC132 00000000 XXXXXXXX XXXXXXXX XXXXXXXX			
0xB0C02234	DMA0_CMICIC133 00000000 XXXXXXXX XXXXXXXX XXXXXXXX			
0xB0C02238	DMA0_CMICIC134 00000000 XXXXXXXX XXXXXXXX XXXXXXXX			
0xB0C0223C	DMA0_CMICIC135 00000000 XXXXXXXX XXXXXXXX XXXXXXXX			
0xB0C02240	DMA0_CMICIC136 00000000 XXXXXXXX XXXXXXXX XXXXXXXX			
0xB0C02244	DMA0_CMICIC137 00000000 XXXXXXXX XXXXXXXX XXXXXXXX			
0xB0C02248	DMA0_CMICIC138 00000000 XXXXXXXX XXXXXXXX XXXXXXXX			
0xB0C0224C	DMA0_CMICIC139 00000000 XXXXXXXX XXXXXXXX XXXXXXXX			
0xB0C02250	DMA0_CMICIC140 00000000 XXXXXXXX XXXXXXXX XXXXXXXX			
0xB0C02254	DMA0_CMICIC141 00000000 XXXXXXXX XXXXXXXX XXXXXXXX			
0xB0C02258	DMA0_CMICIC142 00000000 XXXXXXXX XXXXXXXX XXXXXXXX			
0xB0C0225C	DMA0_CMICIC143 00000000 XXXXXXXX XXXXXXXX XXXXXXXX			
0xB0C02260	DMA0_CMICIC144 00000000 XXXXXXXX XXXXXXXX XXXXXXXX			
0xB0C02264	DMA0_CMICIC145 00000000 XXXXXXXX XXXXXXXX XXXXXXXX			
0xB0C02268	DMA0_CMICIC146 00000000 XXXXXXXX XXXXXXXX XXXXXXXX			
0xB0C0226C	DMA0_CMICIC147 00000000 XXXXXXXX XXXXXXXX XXXXXXXX			
0xB0C02270	DMA0_CMICIC148 00000000 XXXXXXXX XXXXXXXX XXXXXXXX			
0xB0C02274	DMA0_CMICIC149 00000000 XXXXXXXX XXXXXXXX XXXXXXXX			
0xB0C02278	DMA0_CMICIC150 00000000 XXXXXXXX XXXXXXXX XXXXXXXX			
0xB0C0227C	DMA0_CMICIC151 00000000 XXXXXXXX XXXXXXXX XXXXXXXX			
0xB0C02280	DMA0_CMICIC152 00000000 XXXXXXXX XXXXXXXX XXXXXXXX			
0xB0C02284	DMA0_CMICIC153 00000000 XXXXXXXX XXXXXXXX XXXXXXXX			

Table 43. Memory Layout for the PERI5_AHB Registers (Continued)

Offset	+3	+2	+1	+0
0xB0C02288	DMA0_CMICIC154 00000000 XXXXXXXX XXXXXXXX XXXXXXXX			
0xB0C0228C	DMA0_CMICIC155 00000000 XXXXXXXX XXXXXXXX XXXXXXXX			
0xB0C02290	DMA0_CMICIC156 00000000 XXXXXXXX XXXXXXXX XXXXXXXX			
0xB0C02294	DMA0_CMICIC157 00000000 XXXXXXXX XXXXXXXX XXXXXXXX			
0xB0C02298	DMA0_CMICIC158 00000000 XXXXXXXX XXXXXXXX XXXXXXXX			
0xB0C0229C	DMA0_CMICIC159 00000000 XXXXXXXX XXXXXXXX XXXXXXXX			
0xB0C022A0	DMA0_CMICIC160 00000000 XXXXXXXX XXXXXXXX XXXXXXXX			
0xB0C022A4	DMA0_CMICIC161 00000000 XXXXXXXX XXXXXXXX XXXXXXXX			
0xB0C022A8	DMA0_CMICIC162 00000000 XXXXXXXX XXXXXXXX XXXXXXXX			
0xB0C022AC	DMA0_CMICIC163 00000000 XXXXXXXX XXXXXXXX XXXXXXXX			
0xB0C022B0	DMA0_CMICIC164 00000000 XXXXXXXX XXXXXXXX XXXXXXXX			
0xB0C022B4	DMA0_CMICIC165 00000000 XXXXXXXX XXXXXXXX XXXXXXXX			
0xB0C022B8	DMA0_CMICIC166 00000000 XXXXXXXX XXXXXXXX XXXXXXXX			
0xB0C022BC	DMA0_CMICIC167 00000000 XXXXXXXX XXXXXXXX XXXXXXXX			
0xB0C022C0	DMA0_CMICIC168 00000000 XXXXXXXX XXXXXXXX XXXXXXXX			
0xB0C022C4	DMA0_CMICIC169 00000000 XXXXXXXX XXXXXXXX XXXXXXXX			
0xB0C022C8	DMA0_CMICIC170 00000000 XXXXXXXX XXXXXXXX XXXXXXXX			
0xB0C022CC	DMA0_CMICIC171 00000000 XXXXXXXX XXXXXXXX XXXXXXXX			
0xB0C022D0	DMA0_CMICIC172 00000000 XXXXXXXX XXXXXXXX XXXXXXXX			
0xB0C022D4	DMA0_CMICIC173 00000000 XXXXXXXX XXXXXXXX XXXXXXXX			
0xB0C022D8	DMA0_CMICIC174 00000000 XXXXXXXX XXXXXXXX XXXXXXXX			
0xB0C022DC	DMA0_CMICIC175 00000000 XXXXXXXX XXXXXXXX XXXXXXXX			
0xB0C022E0	DMA0_CMICIC176 00000000 XXXXXXXX XXXXXXXX XXXXXXXX			
0xB0C022E4	DMA0_CMICIC177 00000000 XXXXXXXX XXXXXXXX XXXXXXXX			
0xB0C022E8	DMA0_CMICIC178 00000000 XXXXXXXX XXXXXXXX XXXXXXXX			
0xB0C022EC	DMA0_CMICIC179 00000000 XXXXXXXX XXXXXXXX XXXXXXXX			

Table 43. Memory Layout for the PERI5_AHB Registers (Continued)

Offset	+3	+2	+1	+0
0xB0C022F0	DMA0_CMICIC180 00000000 XXXXXXXX XXXXXXXX XXXXXXXX			
0xB0C022F4	DMA0_CMICIC181 00000000 XXXXXXXX XXXXXXXX XXXXXXXX			
0xB0C022F8	DMA0_CMICIC182 00000000 XXXXXXXX XXXXXXXX XXXXXXXX			
0xB0C022FC	DMA0_CMICIC183 00000000 XXXXXXXX XXXXXXXX XXXXXXXX			
0xB0C02300	DMA0_CMICIC184 00000000 XXXXXXXX XXXXXXXX XXXXXXXX			
0xB0C02304	DMA0_CMICIC185 00000000 XXXXXXXX XXXXXXXX XXXXXXXX			
0xB0C02308	DMA0_CMICIC186 00000000 XXXXXXXX XXXXXXXX XXXXXXXX			
0xB0C0230C	DMA0_CMICIC187 00000000 XXXXXXXX XXXXXXXX XXXXXXXX			
0xB0C02310	DMA0_CMICIC188 00000000 XXXXXXXX XXXXXXXX XXXXXXXX			
0xB0C02314	DMA0_CMICIC189 00000000 XXXXXXXX XXXXXXXX XXXXXXXX			
0xB0C02318	DMA0_CMICIC190 00000000 XXXXXXXX XXXXXXXX XXXXXXXX			
0xB0C0231C	DMA0_CMICIC191 00000000 XXXXXXXX XXXXXXXX XXXXXXXX			
0xB0C02320	DMA0_CMICIC192 00000000 XXXXXXXX XXXXXXXX XXXXXXXX			
0xB0C02324	DMA0_CMICIC193 00000000 XXXXXXXX XXXXXXXX XXXXXXXX			
0xB0C02328	DMA0_CMICIC194 00000000 XXXXXXXX XXXXXXXX XXXXXXXX			
0xB0C0232C	DMA0_CMICIC195 00000000 XXXXXXXX XXXXXXXX XXXXXXXX			
0xB0C02330	DMA0_CMICIC196 00000000 XXXXXXXX XXXXXXXX XXXXXXXX			
0xB0C02334	DMA0_CMICIC197 00000000 XXXXXXXX XXXXXXXX XXXXXXXX			
0xB0C02338	DMA0_CMICIC198 00000000 XXXXXXXX XXXXXXXX XXXXXXXX			
0xB0C0233C	DMA0_CMICIC199 00000000 XXXXXXXX XXXXXXXX XXXXXXXX			
0xB0C02340	DMA0_CMICIC200 00000000 XXXXXXXX XXXXXXXX XXXXXXXX			
0xB0C02344	DMA0_CMICIC201 00000000 XXXXXXXX XXXXXXXX XXXXXXXX			
0xB0C02348	DMA0_CMICIC202 00000000 XXXXXXXX XXXXXXXX XXXXXXXX			
0xB0C0234C	DMA0_CMICIC203 00000000 XXXXXXXX XXXXXXXX XXXXXXXX			
0xB0C02350	DMA0_CMICIC204 00000000 XXXXXXXX XXXXXXXX XXXXXXXX			
0xB0C02354	DMA0_CMICIC205 00000000 XXXXXXXX XXXXXXXX XXXXXXXX			

Table 43. Memory Layout for the PERI5_AHB Registers (Continued)

Offset	+3	+2	+1	+0
0xB0C02358	DMA0_CMICIC206 00000000 XXXXXXXX XXXXXXXX XXXXXXXX			
0xB0C0235C	DMA0_CMICIC207 00000000 XXXXXXXX XXXXXXXX XXXXXXXX			
0xB0C02360	DMA0_CMICIC208 00000000 XXXXXXXX XXXXXXXX XXXXXXXX			
0xB0C02364	DMA0_CMICIC209 00000000 XXXXXXXX XXXXXXXX XXXXXXXX			
0xB0C02368	DMA0_CMICIC210 00000000 XXXXXXXX XXXXXXXX XXXXXXXX			
0xB0C0236C	DMA0_CMICIC211 00000000 XXXXXXXX XXXXXXXX XXXXXXXX			
0xB0C02370	DMA0_CMICIC212 00000000 XXXXXXXX XXXXXXXX XXXXXXXX			
0xB0C02374	DMA0_CMICIC213 00000000 XXXXXXXX XXXXXXXX XXXXXXXX			
0xB0C02378	DMA0_CMICIC214 00000000 XXXXXXXX XXXXXXXX XXXXXXXX			
0xB0C0237C	DMA0_CMICIC215 00000000 XXXXXXXX XXXXXXXX XXXXXXXX			
0xB0C02380	DMA0_CMICIC216 00000000 XXXXXXXX XXXXXXXX XXXXXXXX			
0xB0C02384	DMA0_CMICIC217 00000000 XXXXXXXX XXXXXXXX XXXXXXXX			
0xB0C02388	DMA0_CMICIC218 00000000 XXXXXXXX XXXXXXXX XXXXXXXX			
0xB0C0238C	DMA0_CMICIC219 00000000 XXXXXXXX XXXXXXXX XXXXXXXX			
0xB0C02390	DMA0_CMICIC220 00000000 XXXXXXXX XXXXXXXX XXXXXXXX			
0xB0C02394	DMA0_CMICIC221 00000000 XXXXXXXX XXXXXXXX XXXXXXXX			
0xB0C02398	DMA0_CMICIC222 00000000 XXXXXXXX XXXXXXXX XXXXXXXX			
0xB0C0239C	DMA0_CMICIC223 00000000 XXXXXXXX XXXXXXXX XXXXXXXX			
0xB0C023A0	DMA0_CMICIC224 00000000 XXXXXXXX XXXXXXXX XXXXXXXX			
0xB0C023A4	DMA0_CMICIC225 00000000 XXXXXXXX XXXXXXXX XXXXXXXX			
0xB0C023A8	DMA0_CMICIC226 00000000 XXXXXXXX XXXXXXXX XXXXXXXX			
0xB0C023AC	DMA0_CMICIC227 00000000 XXXXXXXX XXXXXXXX XXXXXXXX			
0xB0C023B0	DMA0_CMICIC228 00000000 XXXXXXXX XXXXXXXX XXXXXXXX			
0xB0C023B4	DMA0_CMICIC229 00000000 XXXXXXXX XXXXXXXX XXXXXXXX			
0xB0C023B8	DMA0_CMICIC230 00000000 XXXXXXXX XXXXXXXX XXXXXXXX			
0xB0C023BC	DMA0_CMICIC231 00000000 XXXXXXXX XXXXXXXX XXXXXXXX			

Table 43. Memory Layout for the PERI5_AHB Registers (Continued)

Offset	+3	+2	+1	+0
0xB0C023C0	DMA0_CMICIC232 00000000 XXXXXXXX XXXXXXXX XXXXXXXX			
0xB0C023C4	DMA0_CMICIC233 00000000 XXXXXXXX XXXXXXXX XXXXXXXX			
0xB0C023C8	DMA0_CMICIC234 00000000 XXXXXXXX XXXXXXXX XXXXXXXX			
0xB0C023CC	DMA0_CMICIC235 00000000 XXXXXXXX XXXXXXXX XXXXXXXX			
0xB0C023D0	DMA0_CMICIC236 00000000 XXXXXXXX XXXXXXXX XXXXXXXX			
0xB0C023D4	DMA0_CMICIC237 00000000 XXXXXXXX XXXXXXXX XXXXXXXX			
0xB0C023D8	DMA0_CMICIC238 00000000 XXXXXXXX XXXXXXXX XXXXXXXX			
0xB0C023DC	DMA0_CMICIC239 00000000 XXXXXXXX XXXXXXXX XXXXXXXX			
0xB0C023E0	DMA0_CMICIC240 00000000 XXXXXXXX XXXXXXXX XXXXXXXX			
0xB0C023E4	DMA0_CMICIC241 00000000 XXXXXXXX XXXXXXXX XXXXXXXX			
0xB0C023E8	DMA0_CMICIC242 00000000 XXXXXXXX XXXXXXXX XXXXXXXX			
0xB0C023EC	DMA0_CMICIC243 00000000 XXXXXXXX XXXXXXXX XXXXXXXX			
0xB0C023F0	DMA0_CMICIC244 00000000 XXXXXXXX XXXXXXXX XXXXXXXX			
0xB0C023F4	DMA0_CMICIC245 00000000 XXXXXXXX XXXXXXXX XXXXXXXX			
0xB0C023F8	DMA0_CMICIC246 00000000 XXXXXXXX XXXXXXXX XXXXXXXX			
0xB0C023FC	DMA0_CMICIC247 00000000 XXXXXXXX XXXXXXXX XXXXXXXX			
0xB0C02400	DMA0_CMICIC248 00000000 XXXXXXXX XXXXXXXX XXXXXXXX			
0xB0C02404	DMA0_CMICIC249 00000000 XXXXXXXX XXXXXXXX XXXXXXXX			
0xB0C02408	DMA0_CMICIC250 00000000 XXXXXXXX XXXXXXXX XXXXXXXX			
0xB0C0240C	DMA0_CMICIC251 00000000 XXXXXXXX XXXXXXXX XXXXXXXX			
0xB0C02410	DMA0_CMICIC252 00000000 XXXXXXXX XXXXXXXX XXXXXXXX			
0xB0C02414	DMA0_CMICIC253 00000000 XXXXXXXX XXXXXXXX XXXXXXXX			
0xB0C02418	DMA0_CMICIC254 00000000 XXXXXXXX XXXXXXXX XXXXXXXX			
0xB0C0241C	DMA0_CMICIC255 00000000 XXXXXXXX XXXXXXXX XXXXXXXX			
0xB0C02420	DMA0_CMICIC256 00000000 XXXXXXXX XXXXXXXX XXXXXXXX			
0xB0C02424	DMA0_CMICIC257 00000000 XXXXXXXX XXXXXXXX XXXXXXXX			

Table 43. Memory Layout for the PERI5_AHB Registers (Continued)

Offset	+3	+2	+1	+0
0xB0C02428	DMA0_CMICIC258 00000000 XXXXXXXX XXXXXXXX XXXXXXXX			
0xB0C0242C	DMA0_CMICIC259 00000000 XXXXXXXX XXXXXXXX XXXXXXXX			
0xB0C02430	DMA0_CMICIC260 00000000 XXXXXXXX XXXXXXXX XXXXXXXX			
0xB0C02434	DMA0_CMICIC261 00000000 XXXXXXXX XXXXXXXX XXXXXXXX			
0xB0C02438	DMA0_CMICIC262 00000000 XXXXXXXX XXXXXXXX XXXXXXXX			
0xB0C0243C	DMA0_CMICIC263 00000000 XXXXXXXX XXXXXXXX XXXXXXXX			
0xB0C02440	DMA0_CMICIC264 00000000 XXXXXXXX XXXXXXXX XXXXXXXX			
0xB0C02444	DMA0_CMICIC265 00000000 XXXXXXXX XXXXXXXX XXXXXXXX			
0xB0C02448	DMA0_CMICIC266 00000000 XXXXXXXX XXXXXXXX XXXXXXXX			
0xB0C0244C	DMA0_CMICIC267 00000000 XXXXXXXX XXXXXXXX XXXXXXXX			
0xB0C02450	DMA0_CMICIC268 00000000 XXXXXXXX XXXXXXXX XXXXXXXX			
0xB0C02454	DMA0_CMICIC269 00000000 XXXXXXXX XXXXXXXX XXXXXXXX			
0xB0C02458	DMA0_CMICIC270 00000000 XXXXXXXX XXXXXXXX XXXXXXXX			
0xB0C0245C	DMA0_CMICIC271 00000000 XXXXXXXX XXXXXXXX XXXXXXXX			
0xB0C02460	DMA0_CMICIC272 00000000 XXXXXXXX XXXXXXXX XXXXXXXX			
0xB0C02464	DMA0_CMICIC273 00000000 XXXXXXXX XXXXXXXX XXXXXXXX			
0xB0C02468	DMA0_CMICIC274 00000000 XXXXXXXX XXXXXXXX XXXXXXXX			
0xB0C0246C	DMA0_CMICIC275 00000000 XXXXXXXX XXXXXXXX XXXXXXXX			
0xB0C02470	DMA0_CMICIC276 00000000 XXXXXXXX XXXXXXXX XXXXXXXX			
0xB0C02474	DMA0_CMICIC277 00000000 XXXXXXXX XXXXXXXX XXXXXXXX			
0xB0C02478	DMA0_CMICIC278 00000000 XXXXXXXX XXXXXXXX XXXXXXXX			
0xB0C0247C	DMA0_CMICIC279 00000000 XXXXXXXX XXXXXXXX XXXXXXXX			
0xB0C02480	DMA0_CMICIC280 00000000 XXXXXXXX XXXXXXXX XXXXXXXX			
0xB0C02484	DMA0_CMICIC281 00000000 XXXXXXXX XXXXXXXX XXXXXXXX			
0xB0C02488	DMA0_CMICIC282 00000000 XXXXXXXX XXXXXXXX XXXXXXXX			
0xB0C0248C	DMA0_CMICIC283 00000000 XXXXXXXX XXXXXXXX XXXXXXXX			

Table 43. Memory Layout for the PERI5_AHB Registers (Continued)

Offset	+3	+2	+1	+0
0xB0C02490	DMA0_CMICIC284 00000000 XXXXXXXX XXXXXXXX XXXXXXXX			
0xB0C02494	DMA0_CMICIC285 00000000 XXXXXXXX XXXXXXXX XXXXXXXX			
0xB0C02498	DMA0_CMICIC286 00000000 XXXXXXXX XXXXXXXX XXXXXXXX			
0xB0C0249C	DMA0_CMICIC287 00000000 XXXXXXXX XXXXXXXX XXXXXXXX			
0xB0C024A0	DMA0_CMICIC288 00000000 XXXXXXXX XXXXXXXX XXXXXXXX			
0xB0C024A4	DMA0_CMICIC289 00000000 XXXXXXXX XXXXXXXX XXXXXXXX			
0xB0C024A8	DMA0_CMICIC290 00000000 XXXXXXXX XXXXXXXX XXXXXXXX			
0xB0C024AC	DMA0_CMICIC291 00000000 XXXXXXXX XXXXXXXX XXXXXXXX			
0xB0C024B0	DMA0_CMICIC292 00000000 XXXXXXXX XXXXXXXX XXXXXXXX			
0xB0C024B4	DMA0_CMICIC293 00000000 XXXXXXXX XXXXXXXX XXXXXXXX			
0xB0C024B8	DMA0_CMICIC294 00000000 XXXXXXXX XXXXXXXX XXXXXXXX			
0xB0C024BC	DMA0_CMICIC295 00000000 XXXXXXXX XXXXXXXX XXXXXXXX			
0xB0C024C0	DMA0_CMICIC296 00000000 XXXXXXXX XXXXXXXX XXXXXXXX			
0xB0C024C4	DMA0_CMICIC297 00000000 XXXXXXXX XXXXXXXX XXXXXXXX			
0xB0C024C8	DMA0_CMICIC298 00000000 XXXXXXXX XXXXXXXX XXXXXXXX			
0xB0C024CC	DMA0_CMICIC299 00000000 XXXXXXXX XXXXXXXX XXXXXXXX			
0xB0C024D0	DMA0_CMICIC300 00000000 XXXXXXXX XXXXXXXX XXXXXXXX			
0xB0C024D4	DMA0_CMICIC301 00000000 XXXXXXXX XXXXXXXX XXXXXXXX			
0xB0C024D8	DMA0_CMICIC302 00000000 XXXXXXXX XXXXXXXX XXXXXXXX			
0xB0C024DC	DMA0_CMICIC303 00000000 XXXXXXXX XXXXXXXX XXXXXXXX			
0xB0C024E0	DMA0_CMICIC304 00000000 XXXXXXXX XXXXXXXX XXXXXXXX			
0xB0C024E4	DMA0_CMICIC305 00000000 XXXXXXXX XXXXXXXX XXXXXXXX			
0xB0C024E8	DMA0_CMICIC306 00000000 XXXXXXXX XXXXXXXX XXXXXXXX			
0xB0C024EC	DMA0_CMICIC307 00000000 XXXXXXXX XXXXXXXX XXXXXXXX			
0xB0C024F0	DMA0_CMICIC308 00000000 XXXXXXXX XXXXXXXX XXXXXXXX			
0xB0C024F4	DMA0_CMICIC309 00000000 XXXXXXXX XXXXXXXX XXXXXXXX			

Table 43. Memory Layout for the PERI5_AHB Registers (Continued)

Offset	+3	+2	+1	+0
0xB0C024F8	DMA0_CMICIC310 00000000 XXXXXXXX XXXXXXXX XXXXXXXX			
0xB0C024FC	DMA0_CMICIC311 00000000 XXXXXXXX XXXXXXXX XXXXXXXX			
0xB0C02500	DMA0_CMICIC312 00000000 XXXXXXXX XXXXXXXX XXXXXXXX			
0xB0C02504	DMA0_CMICIC313 00000000 XXXXXXXX XXXXXXXX XXXXXXXX			
0xB0C02508	DMA0_CMICIC314 00000000 XXXXXXXX XXXXXXXX XXXXXXXX			
0xB0C0250C	DMA0_CMICIC315 00000000 XXXXXXXX XXXXXXXX XXXXXXXX			
0xB0C02510	DMA0_CMICIC316 00000000 XXXXXXXX XXXXXXXX XXXXXXXX			
0xB0C02514	DMA0_CMICIC317 00000000 XXXXXXXX XXXXXXXX XXXXXXXX			
0xB0C02518	DMA0_CMICIC318 00000000 XXXXXXXX XXXXXXXX XXXXXXXX			
0xB0C0251C	DMA0_CMICIC319 00000000 XXXXXXXX XXXXXXXX XXXXXXXX			
0xB0C02520	DMA0_CMICIC320 00000000 XXXXXXXX XXXXXXXX XXXXXXXX			
0xB0C02524	DMA0_CMICIC321 00000000 XXXXXXXX XXXXXXXX XXXXXXXX			
0xB0C02528	DMA0_CMICIC322 00000000 XXXXXXXX XXXXXXXX XXXXXXXX			
0xB0C0252C	DMA0_CMICIC323 00000000 XXXXXXXX XXXXXXXX XXXXXXXX			
0xB0C02530	DMA0_CMICIC324 00000000 XXXXXXXX XXXXXXXX XXXXXXXX			
0xB0C02534	DMA0_CMICIC325 00000000 XXXXXXXX XXXXXXXX XXXXXXXX			
0xB0C02538	DMA0_CMICIC326 00000000 XXXXXXXX XXXXXXXX XXXXXXXX			
0xB0C0253C	DMA0_CMICIC327 00000000 XXXXXXXX XXXXXXXX XXXXXXXX			
0xB0C02540	DMA0_CMICIC328 00000000 XXXXXXXX XXXXXXXX XXXXXXXX			
0xB0C02544	DMA0_CMICIC329 00000000 XXXXXXXX XXXXXXXX XXXXXXXX			
0xB0C02548	DMA0_CMICIC330 00000000 XXXXXXXX XXXXXXXX XXXXXXXX			
0xB0C0254C	DMA0_CMICIC331 00000000 XXXXXXXX XXXXXXXX XXXXXXXX			
0xB0C02550	DMA0_CMICIC332 00000000 XXXXXXXX XXXXXXXX XXXXXXXX			
0xB0C02554	DMA0_CMICIC333 00000000 XXXXXXXX XXXXXXXX XXXXXXXX			
0xB0C02558	DMA0_CMICIC334 00000000 XXXXXXXX XXXXXXXX XXXXXXXX			
0xB0C0255C	DMA0_CMICIC335 00000000 XXXXXXXX XXXXXXXX XXXXXXXX			

Table 43. Memory Layout for the PERI5_AHB Registers (Continued)

Offset	+3	+2	+1	+0
0xB0C02560	DMA0_CMICIC336 00000000 XXXXXXXX XXXXXXXX XXXXXXXX			
0xB0C02564	DMA0_CMICIC337 00000000 XXXXXXXX XXXXXXXX XXXXXXXX			
0xB0C02568	DMA0_CMICIC338 00000000 XXXXXXXX XXXXXXXX XXXXXXXX			
0xB0C0256C	DMA0_CMICIC339 00000000 XXXXXXXX XXXXXXXX XXXXXXXX			
0xB0C02570	DMA0_CMICIC340 00000000 XXXXXXXX XXXXXXXX XXXXXXXX			
0xB0C02574	DMA0_CMICIC341 00000000 XXXXXXXX XXXXXXXX XXXXXXXX			
0xB0C02578	DMA0_CMICIC342 00000000 XXXXXXXX XXXXXXXX XXXXXXXX			
0xB0C0257C	DMA0_CMICIC343 00000000 XXXXXXXX XXXXXXXX XXXXXXXX			
0xB0C02580	DMA0_CMICIC344 00000000 XXXXXXXX XXXXXXXX XXXXXXXX			
0xB0C02584	DMA0_CMICIC345 00000000 XXXXXXXX XXXXXXXX XXXXXXXX			
0xB0C02588	DMA0_CMICIC346 00000000 XXXXXXXX XXXXXXXX XXXXXXXX			
0xB0C0258C	DMA0_CMICIC347 00000000 XXXXXXXX XXXXXXXX XXXXXXXX			
0xB0C02590	DMA0_CMICIC348 00000000 XXXXXXXX XXXXXXXX XXXXXXXX			
0xB0C02594	DMA0_CMICIC349 00000000 XXXXXXXX XXXXXXXX XXXXXXXX			
0xB0C02598	DMA0_CMICIC350 00000000 XXXXXXXX XXXXXXXX XXXXXXXX			
0xB0C0259C	DMA0_CMICIC351 00000000 XXXXXXXX XXXXXXXX XXXXXXXX			
0xB0C025A0	DMA0_CMICIC352 00000000 XXXXXXXX XXXXXXXX XXXXXXXX			
0xB0C025A4	DMA0_CMICIC353 00000000 XXXXXXXX XXXXXXXX XXXXXXXX			
0xB0C025A8	DMA0_CMICIC354 00000000 XXXXXXXX XXXXXXXX XXXXXXXX			
0xB0C025AC	DMA0_CMICIC355 00000000 XXXXXXXX XXXXXXXX XXXXXXXX			
0xB0C025B0	DMA0_CMICIC356 00000000 XXXXXXXX XXXXXXXX XXXXXXXX			
0xB0C025B4	DMA0_CMICIC357 00000000 XXXXXXXX XXXXXXXX XXXXXXXX			
0xB0C025B8	DMA0_CMICIC358 00000000 XXXXXXXX XXXXXXXX XXXXXXXX			
0xB0C025BC	DMA0_CMICIC359 00000000 XXXXXXXX XXXXXXXX XXXXXXXX			
0xB0C025C0	DMA0_CMICIC360 00000000 XXXXXXXX XXXXXXXX XXXXXXXX			
0xB0C025C4	DMA0_CMICIC361 00000000 XXXXXXXX XXXXXXXX XXXXXXXX			

Table 43. Memory Layout for the PERI5_AHB Registers (Continued)

Offset	+3	+2	+1	+0
0xB0C025C8	DMA0_CMICIC362 00000000 XXXXXXXX XXXXXXXX XXXXXXXX			
0xB0C025CC	DMA0_CMICIC363 00000000 XXXXXXXX XXXXXXXX XXXXXXXX			
0xB0C025D0	DMA0_CMICIC364 00000000 XXXXXXXX XXXXXXXX XXXXXXXX			
0xB0C025D4	DMA0_CMICIC365 00000000 XXXXXXXX XXXXXXXX XXXXXXXX			
0xB0C025D8	DMA0_CMICIC366 00000000 XXXXXXXX XXXXXXXX XXXXXXXX			
0xB0C025DC	DMA0_CMICIC367 00000000 XXXXXXXX XXXXXXXX XXXXXXXX			
0xB0C025E0	DMA0_CMICIC368 00000000 XXXXXXXX XXXXXXXX XXXXXXXX			
0xB0C025E4	DMA0_CMICIC369 00000000 XXXXXXXX XXXXXXXX XXXXXXXX			
0xB0C025E8	DMA0_CMICIC370 00000000 XXXXXXXX XXXXXXXX XXXXXXXX			
0xB0C025EC	DMA0_CMICIC371 00000000 XXXXXXXX XXXXXXXX XXXXXXXX			
0xB0C025F0	DMA0_CMICIC372 00000000 XXXXXXXX XXXXXXXX XXXXXXXX			
0xB0C025F4	DMA0_CMICIC373 00000000 XXXXXXXX XXXXXXXX XXXXXXXX			
0xB0C025F8	DMA0_CMICIC374 00000000 XXXXXXXX XXXXXXXX XXXXXXXX			
0xB0C025FC	DMA0_CMICIC375 00000000 XXXXXXXX XXXXXXXX XXXXXXXX			
0xB0C02600	DMA0_CMICIC376 00000000 XXXXXXXX XXXXXXXX XXXXXXXX			
0xB0C02604	DMA0_CMICIC377 00000000 XXXXXXXX XXXXXXXX XXXXXXXX			
0xB0C02608	DMA0_CMICIC378 00000000 XXXXXXXX XXXXXXXX XXXXXXXX			
0xB0C0260C	DMA0_CMICIC379 00000000 XXXXXXXX XXXXXXXX XXXXXXXX			
0xB0C02610	DMA0_CMICIC380 00000000 XXXXXXXX XXXXXXXX XXXXXXXX			
0xB0C02614	DMA0_CMICIC381 00000000 XXXXXXXX XXXXXXXX XXXXXXXX			
0xB0C02618	DMA0_CMICIC382 00000000 XXXXXXXX XXXXXXXX XXXXXXXX			
0xB0C0261C	DMA0_CMICIC383 00000000 XXXXXXXX XXXXXXXX XXXXXXXX			
0xB0C02620	DMA0_CMICIC384 00000000 XXXXXXXX XXXXXXXX XXXXXXXX			
0xB0C02624	DMA0_CMICIC385 00000000 XXXXXXXX XXXXXXXX XXXXXXXX			
0xB0C02628	DMA0_CMICIC386 00000000 XXXXXXXX XXXXXXXX XXXXXXXX			
0xB0C0262C	DMA0_CMICIC387 00000000 XXXXXXXX XXXXXXXX XXXXXXXX			

Table 43. Memory Layout for the PERI5_AHB Registers (Continued)

Offset	+3	+2	+1	+0
0xB0C02630	DMA0_CMICIC388 00000000 XXXXXXXX XXXXXXXX XXXXXXXX			
0xB0C02634	DMA0_CMICIC389 00000000 XXXXXXXX XXXXXXXX XXXXXXXX			
0xB0C02638	DMA0_CMICIC390 00000000 XXXXXXXX XXXXXXXX XXXXXXXX			
0xB0C0263C	DMA0_CMICIC391 00000000 XXXXXXXX XXXXXXXX XXXXXXXX			
0xB0C02640	DMA0_CMICIC392 00000000 XXXXXXXX XXXXXXXX XXXXXXXX			
0xB0C02644	DMA0_CMICIC393 00000000 XXXXXXXX XXXXXXXX XXXXXXXX			
0xB0C02648	DMA0_CMICIC394 00000000 XXXXXXXX XXXXXXXX XXXXXXXX			
0xB0C0264C	DMA0_CMICIC395 00000000 XXXXXXXX XXXXXXXX XXXXXXXX			
0xB0C02650	DMA0_CMICIC396 00000000 XXXXXXXX XXXXXXXX XXXXXXXX			
0xB0C02654	DMA0_CMICIC397 00000000 XXXXXXXX XXXXXXXX XXXXXXXX			
0xB0C02658	DMA0_CMICIC398 00000000 XXXXXXXX XXXXXXXX XXXXXXXX			
0xB0C0265C	DMA0_CMICIC399 00000000 XXXXXXXX XXXXXXXX XXXXXXXX			
0xB0C02660	DMA0_CMICIC400 00000000 XXXXXXXX XXXXXXXX XXXXXXXX			
0xB0C02664	DMA0_CMICIC401 00000000 XXXXXXXX XXXXXXXX XXXXXXXX			
0xB0C02668	DMA0_CMICIC402 00000000 XXXXXXXX XXXXXXXX XXXXXXXX			
0xB0C0266C	DMA0_CMICIC403 00000000 XXXXXXXX XXXXXXXX XXXXXXXX			
0xB0C02670	DMA0_CMICIC404 00000000 XXXXXXXX XXXXXXXX XXXXXXXX			
0xB0C02674	DMA0_CMICIC405 00000000 XXXXXXXX XXXXXXXX XXXXXXXX			
0xB0C02678	DMA0_CMICIC406 00000000 XXXXXXXX XXXXXXXX XXXXXXXX			
0xB0C0267C	DMA0_CMICIC407 00000000 XXXXXXXX XXXXXXXX XXXXXXXX			
0xB0C02680	DMA0_CMICIC408 00000000 XXXXXXXX XXXXXXXX XXXXXXXX			
0xB0C02684	DMA0_CMICIC409 00000000 XXXXXXXX XXXXXXXX XXXXXXXX			
0xB0C02688	DMA0_CMICIC410 00000000 XXXXXXXX XXXXXXXX XXXXXXXX			
0xB0C0268C	DMA0_CMICIC411 00000000 XXXXXXXX XXXXXXXX XXXXXXXX			
0xB0C02690	DMA0_CMICIC412 00000000 XXXXXXXX XXXXXXXX XXXXXXXX			
0xB0C02694	DMA0_CMICIC413 00000000 XXXXXXXX XXXXXXXX XXXXXXXX			

Table 43. Memory Layout for the PERI5_AHB Registers (Continued)

Offset	+3	+2	+1	+0
0xB0C02698	DMA0_CMICIC414 00000000 XXXXXXXX XXXXXXXX XXXXXXXX			
0xB0C0269C	DMA0_CMICIC415 00000000 XXXXXXXX XXXXXXXX XXXXXXXX			
0xB0C026A0	DMA0_CMICIC416 00000000 XXXXXXXX XXXXXXXX XXXXXXXX			
0xB0C026A4	DMA0_CMICIC417 00000000 XXXXXXXX XXXXXXXX XXXXXXXX			
0xB0C026A8	DMA0_CMICIC418 00000000 XXXXXXXX XXXXXXXX XXXXXXXX			
0xB0C026AC	DMA0_CMICIC419 00000000 XXXXXXXX XXXXXXXX XXXXXXXX			
0xB0C026B0	DMA0_CMICIC420 00000000 XXXXXXXX XXXXXXXX XXXXXXXX			
0xB0C026B4	DMA0_CMICIC421 00000000 XXXXXXXX XXXXXXXX XXXXXXXX			
0xB0C026B8	DMA0_CMICIC422 00000000 XXXXXXXX XXXXXXXX XXXXXXXX			
0xB0C026BC	DMA0_CMICIC423 00000000 XXXXXXXX XXXXXXXX XXXXXXXX			
0xB0C026C0	DMA0_CMICIC424 00000000 XXXXXXXX XXXXXXXX XXXXXXXX			
0xB0C026C4	DMA0_CMICIC425 00000000 XXXXXXXX XXXXXXXX XXXXXXXX			
0xB0C026C8	DMA0_CMICIC426 00000000 XXXXXXXX XXXXXXXX XXXXXXXX			
0xB0C026CC	DMA0_CMICIC427 00000000 XXXXXXXX XXXXXXXX XXXXXXXX			
0xB0C026D0	DMA0_CMICIC428 00000000 XXXXXXXX XXXXXXXX XXXXXXXX			
0xB0C026D4	DMA0_CMICIC429 00000000 XXXXXXXX XXXXXXXX XXXXXXXX			
0xB0C026D8	DMA0_CMICIC430 00000000 XXXXXXXX XXXXXXXX XXXXXXXX			
0xB0C026DC	DMA0_CMICIC431 00000000 XXXXXXXX XXXXXXXX XXXXXXXX			
0xB0C026E0	DMA0_CMICIC432 00000000 XXXXXXXX XXXXXXXX XXXXXXXX			
0xB0C026E4	DMA0_CMICIC433 00000000 XXXXXXXX XXXXXXXX XXXXXXXX			
0xB0C026E8	DMA0_CMICIC434 00000000 XXXXXXXX XXXXXXXX XXXXXXXX			
0xB0C026EC	DMA0_CMICIC435 00000000 XXXXXXXX XXXXXXXX XXXXXXXX			
0xB0C026F0	DMA0_CMICIC436 00000000 XXXXXXXX XXXXXXXX XXXXXXXX			
0xB0C026F4	DMA0_CMICIC437 00000000 XXXXXXXX XXXXXXXX XXXXXXXX			
0xB0C026F8	DMA0_CMICIC438 00000000 XXXXXXXX XXXXXXXX XXXXXXXX			
0xB0C026FC	DMA0_CMICIC439 00000000 XXXXXXXX XXXXXXXX XXXXXXXX			

Table 43. Memory Layout for the PERI5_AHB Registers (Continued)

Offset	+3	+2	+1	+0
0xB0C02700	DMA0_CMICIC440 00000000 XXXXXXXX XXXXXXXX XXXXXXXX			
0xB0C02704	DMA0_CMICIC441 00000000 XXXXXXXX XXXXXXXX XXXXXXXX			
0xB0C02708	DMA0_CMICIC442 00000000 XXXXXXXX XXXXXXXX XXXXXXXX			
0xB0C0270C	DMA0_CMICIC443 00000000 XXXXXXXX XXXXXXXX XXXXXXXX			
0xB0C02710	DMA0_CMICIC444 00000000 XXXXXXXX XXXXXXXX XXXXXXXX			
0xB0C02714	DMA0_CMICIC445 00000000 XXXXXXXX XXXXXXXX XXXXXXXX			
0xB0C02718	DMA0_CMICIC446 00000000 XXXXXXXX XXXXXXXX XXXXXXXX			
0xB0C0271C	DMA0_CMICIC447 00000000 XXXXXXXX XXXXXXXX XXXXXXXX			
0xB0C02720	DMA0_CMICIC448 00000000 XXXXXXXX XXXXXXXX XXXXXXXX			
0xB0C02724	DMA0_CMICIC449 00000000 XXXXXXXX XXXXXXXX XXXXXXXX			
0xB0C02728	DMA0_CMICIC450 00000000 XXXXXXXX XXXXXXXX XXXXXXXX			
0xB0C0272C	DMA0_CMICIC451 00000000 XXXXXXXX XXXXXXXX XXXXXXXX			
0xB0C02730	DMA0_CMICIC452 00000000 XXXXXXXX XXXXXXXX XXXXXXXX			
0xB0C02734	DMA0_CMICIC453 00000000 XXXXXXXX XXXXXXXX XXXXXXXX			
0xB0C02738	DMA0_CMICIC454 00000000 XXXXXXXX XXXXXXXX XXXXXXXX			
0xB0C0273C	DMA0_CMICIC455 00000000 XXXXXXXX XXXXXXXX XXXXXXXX			
0xB0C02740	DMA0_CMICIC456 00000000 XXXXXXXX XXXXXXXX XXXXXXXX			
0xB0C02744	DMA0_CMICIC457 00000000 XXXXXXXX XXXXXXXX XXXXXXXX			
0xB0C02748	DMA0_CMICIC458 00000000 XXXXXXXX XXXXXXXX XXXXXXXX			
0xB0C0274C	DMA0_CMICIC459 00000000 XXXXXXXX XXXXXXXX XXXXXXXX			
0xB0C02750	DMA0_CMICIC460 00000000 XXXXXXXX XXXXXXXX XXXXXXXX			
0xB0C02754	DMA0_CMICIC461 00000000 XXXXXXXX XXXXXXXX XXXXXXXX			
0xB0C02758	DMA0_CMICIC462 00000000 XXXXXXXX XXXXXXXX XXXXXXXX			
0xB0C0275C	DMA0_CMICIC463 00000000 XXXXXXXX XXXXXXXX XXXXXXXX			
0xB0C02760	DMA0_CMICIC464 00000000 XXXXXXXX XXXXXXXX XXXXXXXX			
0xB0C02764	DMA0_CMICIC465 00000000 XXXXXXXX XXXXXXXX XXXXXXXX			

Table 43. Memory Layout for the PERI5_AHB Registers (Continued)

Offset	+3	+2	+1	+0
0xB0C02768	DMA0_CMICIC466 00000000 XXXXXXXX XXXXXXXX XXXXXXXX			
0xB0C0276C	DMA0_CMICIC467 00000000 XXXXXXXX XXXXXXXX XXXXXXXX			
0xB0C02770	DMA0_CMICIC468 00000000 XXXXXXXX XXXXXXXX XXXXXXXX			
0xB0C02774	DMA0_CMICIC469 00000000 XXXXXXXX XXXXXXXX XXXXXXXX			
0xB0C02778	DMA0_CMICIC470 00000000 XXXXXXXX XXXXXXXX XXXXXXXX			
0xB0C0277C	DMA0_CMICIC471 00000000 XXXXXXXX XXXXXXXX XXXXXXXX			
0xB0C02780	DMA0_CMICIC472 00000000 XXXXXXXX XXXXXXXX XXXXXXXX			
0xB0C02784	DMA0_CMICIC473 00000000 XXXXXXXX XXXXXXXX XXXXXXXX			
0xB0C02788	DMA0_CMICIC474 00000000 XXXXXXXX XXXXXXXX XXXXXXXX			
0xB0C0278C	DMA0_CMICIC475 00000000 XXXXXXXX XXXXXXXX XXXXXXXX			
0xB0C02790	DMA0_CMICIC476 00000000 XXXXXXXX XXXXXXXX XXXXXXXX			
0xB0C02794	DMA0_CMICIC477 00000000 XXXXXXXX XXXXXXXX XXXXXXXX			
0xB0C02798	DMA0_CMICIC478 00000000 XXXXXXXX XXXXXXXX XXXXXXXX			
0xB0C0279C	DMA0_CMICIC479 00000000 XXXXXXXX XXXXXXXX XXXXXXXX			
0xB0C027A0	DMA0_CMICIC480 00000000 XXXXXXXX XXXXXXXX XXXXXXXX			
0xB0C027A4	DMA0_CMICIC481 00000000 XXXXXXXX XXXXXXXX XXXXXXXX			
0xB0C027A8	DMA0_CMICIC482 00000000 XXXXXXXX XXXXXXXX XXXXXXXX			
0xB0C027AC	DMA0_CMICIC483 00000000 XXXXXXXX XXXXXXXX XXXXXXXX			
0xB0C027B0	DMA0_CMICIC484 00000000 XXXXXXXX XXXXXXXX XXXXXXXX			
0xB0C027B4	DMA0_CMICIC485 00000000 XXXXXXXX XXXXXXXX XXXXXXXX			
0xB0C027B8	DMA0_CMICIC486 00000000 XXXXXXXX XXXXXXXX XXXXXXXX			
0xB0C027BC	DMA0_CMICIC487 00000000 XXXXXXXX XXXXXXXX XXXXXXXX			
0xB0C027C0	DMA0_CMICIC488 00000000 XXXXXXXX XXXXXXXX XXXXXXXX			
0xB0C027C4	DMA0_CMICIC489 00000000 XXXXXXXX XXXXXXXX XXXXXXXX			
0xB0C027C8	DMA0_CMICIC490 00000000 XXXXXXXX XXXXXXXX XXXXXXXX			
0xB0C027CC	DMA0_CMICIC491 00000000 XXXXXXXX XXXXXXXX XXXXXXXX			

Table 43. Memory Layout for the PERI5_AHB Registers (Continued)

Offset	+3	+2	+1	+0
0xB0C027D0	DMA0_CMICIC492 00000000 XXXXXXXX XXXXXXXX XXXXXXXX			
0xB0C027D4	DMA0_CMICIC493 00000000 XXXXXXXX XXXXXXXX XXXXXXXX			
0xB0C027D8	DMA0_CMICIC494 00000000 XXXXXXXX XXXXXXXX XXXXXXXX			
0xB0C027DC	DMA0_CMICIC495 00000000 XXXXXXXX XXXXXXXX XXXXXXXX			
0xB0C027E0	DMA0_CMICIC496 00000000 XXXXXXXX XXXXXXXX XXXXXXXX			
0xB0C027E4	DMA0_CMICIC497 00000000 XXXXXXXX XXXXXXXX XXXXXXXX			
0xB0C027E8	DMA0_CMICIC498 00000000 XXXXXXXX XXXXXXXX XXXXXXXX			
0xB0C027EC	DMA0_CMICIC499 00000000 XXXXXXXX XXXXXXXX XXXXXXXX			
0xB0C027F0	DMA0_CMICIC500 00000000 XXXXXXXX XXXXXXXX XXXXXXXX			
0xB0C027F4	DMA0_CMICIC501 00000000 XXXXXXXX XXXXXXXX XXXXXXXX			
0xB0C027F8	DMA0_CMICIC502 00000000 XXXXXXXX XXXXXXXX XXXXXXXX			
0xB0C027FC	DMA0_CMICIC503 00000000 XXXXXXXX XXXXXXXX XXXXXXXX			
0xB0C02800	DMA0_CMCHIC0 XXXXXXXX XXXXXXXX 00000000 00000010			
0xB0C02804	DMA0_CMCHIC1 XXXXXXXX XXXXXXXX 00000000 00000010			
0xB0C02808	DMA0_CMCHIC2 XXXXXXXX XXXXXXXX 00000000 00000010			
0xB0C0280C	DMA0_CMCHIC3 XXXXXXXX XXXXXXXX 00000000 00000010			
0xB0C02810	DMA0_CMCHIC4 XXXXXXXX XXXXXXXX 00000000 00000010			
0xB0C02814	DMA0_CMCHIC5 XXXXXXXX XXXXXXXX 00000000 00000010			
0xB0C02818	DMA0_CMCHIC6 XXXXXXXX XXXXXXXX 00000000 00000010			
0xB0C0281C	DMA0_CMCHIC7 XXXXXXXX XXXXXXXX 00000000 00000010			
0xB0C02820	DMA0_CMCHIC8 XXXXXXXX XXXXXXXX 00000000 00000010			
0xB0C02824	DMA0_CMCHIC9 XXXXXXXX XXXXXXXX 00000000 00000010			
0xB0C02828	DMA0_CMCHIC10 XXXXXXXX XXXXXXXX 00000000 00000010			
0xB0C0282C	DMA0_CMCHIC11 XXXXXXXX XXXXXXXX 00000000 00000010			
0xB0C02830	DMA0_CMCHIC12 XXXXXXXX XXXXXXXX 00000000 00000010			
0xB0C02834	DMA0_CMCHIC13 XXXXXXXX XXXXXXXX 00000000 00000010			

Table 43. Memory Layout for the PERI5_AHB Registers (Continued)

Offset	+3	+2	+1	+0
0xB0C02838	DMA0_CMCHIC14 XXXXXXXX XXXXXXXX 00000000 00000010			
0xB0C0283C	DMA0_CMCHIC15 XXXXXXXX XXXXXXXX 00000000 00000010			
0xB0C02840	DMA0_CMCHIC16 XXXXXXXX XXXXXXXX 00000000 00000010			
0xB0C02844	DMA0_CMCHIC17 XXXXXXXX XXXXXXXX 00000000 00000010			
0xB0C02848	DMA0_CMCHIC18 XXXXXXXX XXXXXXXX 00000000 00000010			
0xB0C0284C	DMA0_CMCHIC19 XXXXXXXX XXXXXXXX 00000000 00000010			
0xB0C02850	DMA0_CMCHIC20 XXXXXXXX XXXXXXXX 00000000 00000010			
0xB0C02854	DMA0_CMCHIC21 XXXXXXXX XXXXXXXX 00000000 00000010			
0xB0C02858	DMA0_CMCHIC22 XXXXXXXX XXXXXXXX 00000000 00000010			
0xB0C0285C	DMA0_CMCHIC23 XXXXXXXX XXXXXXXX 00000000 00000010			
0xB0C02860	DMA0_CMCHIC24 XXXXXXXX XXXXXXXX 00000000 00000010			
0xB0C02864	DMA0_CMCHIC25 XXXXXXXX XXXXXXXX 00000000 00000010			
0xB0C02868	DMA0_CMCHIC26 XXXXXXXX XXXXXXXX 00000000 00000010			
0xB0C0286C	DMA0_CMCHIC27 XXXXXXXX XXXXXXXX 00000000 00000010			
0xB0C02870	DMA0_CMCHIC28 XXXXXXXX XXXXXXXX 00000000 00000010			
0xB0C02874	DMA0_CMCHIC29 XXXXXXXX XXXXXXXX 00000000 00000010			
0xB0C02878	DMA0_CMCHIC30 XXXXXXXX XXXXXXXX 00000000 00000010			
0xB0C0287C	DMA0_CMCHIC31 XXXXXXXX XXXXXXXX 00000000 00000010			
0xB0C02880	DMA0_CMCHIC32 XXXXXXXX XXXXXXXX 00000000 00000010			
0xB0C02884	DMA0_CMCHIC33 XXXXXXXX XXXXXXXX 00000000 00000010			
0xB0C02888	DMA0_CMCHIC34 XXXXXXXX XXXXXXXX 00000000 00000010			
0xB0C0288C	DMA0_CMCHIC35 XXXXXXXX XXXXXXXX 00000000 00000010			
0xB0C02890	DMA0_CMCHIC36 XXXXXXXX XXXXXXXX 00000000 00000010			
0xB0C02894	DMA0_CMCHIC37 XXXXXXXX XXXXXXXX 00000000 00000010			
0xB0C02898	DMA0_CMCHIC38 XXXXXXXX XXXXXXXX 00000000 00000010			
0xB0C0289C	DMA0_CMCHIC39 XXXXXXXX XXXXXXXX 00000000 00000010			

Table 43. Memory Layout for the PERI5_AHB Registers (Continued)

Offset	+3	+2	+1	+0
0xB0C028A0	DMA0_CMCHIC40 XXXXXXXX XXXXXXXX 00000000 00000010			
0xB0C028A4	DMA0_CMCHIC41 XXXXXXXX XXXXXXXX 00000000 00000010			
0xB0C028A8	DMA0_CMCHIC42 XXXXXXXX XXXXXXXX 00000000 00000010			
0xB0C028AC	DMA0_CMCHIC43 XXXXXXXX XXXXXXXX 00000000 00000010			
0xB0C028B0	DMA0_CMCHIC44 XXXXXXXX XXXXXXXX 00000000 00000010			
0xB0C028B4	DMA0_CMCHIC45 XXXXXXXX XXXXXXXX 00000000 00000010			
0xB0C028B8	DMA0_CMCHIC46 XXXXXXXX XXXXXXXX 00000000 00000010			
0xB0C028BC	DMA0_CMCHIC47 XXXXXXXX XXXXXXXX 00000000 00000010			
0xB0C028C0	DMA0_CMCHIC48 XXXXXXXX XXXXXXXX 00000000 00000010			
0xB0C028C4	DMA0_CMCHIC49 XXXXXXXX XXXXXXXX 00000000 00000010			
0xB0C028C8	DMA0_CMCHIC50 XXXXXXXX XXXXXXXX 00000000 00000010			
0xB0C028CC	DMA0_CMCHIC51 XXXXXXXX XXXXXXXX 00000000 00000010			
0xB0C028D0	DMA0_CMCHIC52 XXXXXXXX XXXXXXXX 00000000 00000010			
0xB0C028D4	DMA0_CMCHIC53 XXXXXXXX XXXXXXXX 00000000 00000010			
0xB0C028D8	DMA0_CMCHIC54 XXXXXXXX XXXXXXXX 00000000 00000010			
0xB0C028DC	DMA0_CMCHIC55 XXXXXXXX XXXXXXXX 00000000 00000010			
0xB0C028E0	DMA0_CMCHIC56 XXXXXXXX XXXXXXXX 00000000 00000010			
0xB0C028E4	DMA0_CMCHIC57 XXXXXXXX XXXXXXXX 00000000 00000010			
0xB0C028E8	DMA0_CMCHIC58 XXXXXXXX XXXXXXXX 00000000 00000010			
0xB0C028EC	DMA0_CMCHIC59 XXXXXXXX XXXXXXXX 00000000 00000010			
0xB0C028F0	DMA0_CMCHIC60 XXXXXXXX XXXXXXXX 00000000 00000010			
0xB0C028F4	DMA0_CMCHIC61 XXXXXXXX XXXXXXXX 00000000 00000010			
0xB0C028F8	DMA0_CMCHIC62 XXXXXXXX XXXXXXXX 00000000 00000010			
0xB0C028FC	DMA0_CMCHIC63 XXXXXXXX XXXXXXXX 00000000 00000010			
0xB0C02900- B0C07FFC	reserved XXXXXXXX XXXXXXXX XXXXXXXX XXXXXXXX			
0xB0C08000	MPUXDMA0_CTRL0 00000000 00000000 00000001 00000000			

Table 43. Memory Layout for the PERI5_AHB Registers (Continued)

Offset	+3	+2	+1	+0
0xB0C08004	MPUXDMA0_NMIEN XXXXXXXX XXXXXXXX XXXXXXXX 00000001			
0xB0C08008	MPUXDMA0_WERRC XXXXXXXX XXXXXXXX 00000XXX XXXXXXX0			
0xB0C0800C	MPUXDMA0_WERRA XXXXXXXX XXXXXXXX XXXXXXXX XXXXXXXX			
0xB0C08010	MPUXDMA0_RERRC XXXXXXXX XXXXXXXX 00000XXX XXXXXXX0			
0xB0C08014	MPUXDMA0_RERRA XXXXXXXX XXXXXXXX XXXXXXXX XXXXXXXX			
0xB0C08018	MPUXDMA0_CTRL1 XXXXXXXX XXXXXXXX 00000000 00000000			
0xB0C0801C	MPUXDMA0_SADDR1 00000000 00000000 00000000 00000000			
0xB0C08020	MPUXDMA0_EADDR1 00000000 00000000 00000000 01111111			
0xB0C08024	MPUXDMA0_CTRL2 XXXXXXXX XXXXXXXX 00000000 00000000			
0xB0C08028	MPUXDMA0_SADDR2 00000000 00000000 00000000 00000000			
0xB0C0802C	MPUXDMA0_EADDR2 00000000 00000000 00000000 01111111			
0xB0C08030	MPUXDMA0_CTRL3 XXXXXXXX XXXXXXXX 00000000 00000000			
0xB0C08034	MPUXDMA0_SADDR3 00000000 00000000 00000000 00000000			
0xB0C08038	MPUXDMA0_EADDR3 00000000 00000000 00000000 01111111			
0xB0C0803C	MPUXDMA0_CTRL4 XXXXXXXX XXXXXXXX 00000000 00000000			
0xB0C08040	MPUXDMA0_SADDR4 00000000 00000000 00000000 00000000			
0xB0C08044	MPUXDMA0_EADDR4 00000000 00000000 00000000 01111111			
0xB0C08048	MPUXDMA0_CTRL5 XXXXXXXX XXXXXXXX 00000000 00000000			
0xB0C0804C	MPUXDMA0_SADDR5 00000000 00000000 00000000 00000000			
0xB0C08050	MPUXDMA0_EADDR5 00000000 00000000 00000000 01111111			
0xB0C08054	MPUXDMA0_CTRL6 XXXXXXXX XXXXXXXX 00000000 00000000			
0xB0C08058	MPUXDMA0_SADDR6 00000000 00000000 00000000 00000000			
0xB0C0805C	MPUXDMA0_EADDR6 00000000 00000000 00000000 01111111			
0xB0C08060	MPUXDMA0_CTRL7 XXXXXXXX XXXXXXXX 00000000 00000000			
0xB0C08064	MPUXDMA0_SADDR7 00000000 00000000 00000000 00000000			
0xB0C08068	MPUXDMA0_EADDR7 00000000 00000000 00000000 01111111			

Table 43. Memory Layout for the PERI5_AHB Registers (Continued)

Offset	+3	+2	+1	+0
0xB0C0806C	MPUXDMA0_CTRL8 XXXXXXXX XXXXXXXX 00000000 00000000			
0xB0C08070	MPUXDMA0_SADDR8 00000000 00000000 00000000 00000000			
0xB0C08074	MPUXDMA0_EADDR8 00000000 00000000 00000000 01111111			
0xB0C08078	MPUXDMA0_UNLOCK 00000000 00000000 00000000 00000000			
0xB0C0807C	MPUXDMA0_MID 00000000 00000000 00000000 00000000			
0xB0C08080- B0CFFC00	reserved XXXXXXXX XXXXXXXX XXXXXXXX XXXXXXXX			
0xB0CFFC04	BSU5_BTST 00000000 00000000 00000000 00000000			
0xB0CFFC08- B0CFFFFC	reserved XXXXXXXX XXXXXXXX XXXXXXXX XXXXXXXX			

Table 44. Memory Layout of SYSTEM_RAM_CONFIG Registers

Offset	+7	+6	+5	+4	+3	+2	+1	+0
0xB0D00000	SRCFG_CFG1 00000000 00000000 00000000 00000000				SRCFG_CFG0 00000011 00000011 00000001 00000000			
0xB0D00008	SRCFG_KEY 00000000 00000000 00000000 00000000				SRCFG_CFG2 00000000 00000000 00000000 00000000			
0xB0D00010	SRCFG_INTE 00000000 00000000 00000000 00000000				SRCFG_ERRFLG 00000000 00000000 00000000 00000000			
0xB0D00018	read0 00000000 00000000 00000000 00000000				SRCFG_ECCE 00000000 00000000 00000000 00000001			
0xB0D00020	SRCFG_MID 00000000 00000000 00000000 00000000				SRCFG_ERRADR 00000000 00000000 00000000 00000000			
0xB0D00028- B0D00FF8	reserved XXXXXXXX XXXXXXXX XXXXXXXX XXXXXXXX XXXXXXXX XXXXXXXX XXXXXXXX XXXXXXXX							

Table 45. Memory Map of EXCFG Registers

Offset	+7	+6	+5	+4	+3	+2	+1	+0
0xFFFEF000 - 0xFFFEFF50	reserved XXXXXXXX XXXXXXXX XXXXXXXX XXXXXXXX XXXXXXXX XXXXXXXX XXXXXXXX XXXXXXXX							
0xFFFEFF58	read0 00000000 00000000 00000000 00000000				EXCFG_UNLOCK 00000000 00000000 00000000 00000000			
0xFFFEFF58	read0 00000000 00000000 00000000 00000000				EXCFG_CNFG 00000000 00000000 00000000 00000000			
0xFFFEFF60 - 0xFFFEFF78	reserved XXXXXXXX XXXXXXXX XXXXXXXX XXXXXXXX XXXXXXXX XXXXXXXX XXXXXXXX XXXXXXXX							
0xFFFEFF80	EXCFG_UNDEFINACT 11111111 11111111 00000000 00100100				read0 00000000 00000000 00000000 00000000			
0xFFFEFF88	EXCFG_PABORTINACT 11111111 11111111 00000000 00101100				EXCFG_SYCINACT 11111111 11111111 00000000 00101000			
0xFFFEFF90	read0 00000000 00000000 00000000 00000000				EXCFG_DABORTINACT 11111111 11111111 00000000 00110000			
0xFFFEFF98	read0 00000000 00000000 00000000 00000000				EXCFG_IRQINACT 11111111 11111111 00000000 00111000			
0xFFFEFFA0 - 0xFFFEFFB8	reserved XXXXXXXX XXXXXXXX XXXXXXXX XXXXXXXX XXXXXXXX XXXXXXXX XXXXXXXX XXXXXXXX							
0xFFFEFFC0	EXCFG_UNDEFACT 11111111 11111111 00000000 00100100				read0 00000000 00000000 00000000 00000000			
0xFFFEFFC8	EXCFG_PABORTACT 11111111 11111111 00000000 00101100				EXCFG_SYCACT 11111111 11111111 00000000 00101000			
0xFFFEFFD0	read0 00000000 00000000 00000000 00000000				EXCFG_DABORTACT 11111111 11111111 00000000 00110000			
0xFFFEFFD8	read0 00000000 00000000 00000000 00000000				EXCFG_IRQACT 11111111 11111111 00000000 00111000			
0xFFFEFFE0 - 0xFFFEFFF8	reserved XXXXXXXX XXXXXXXX XXXXXXXX XXXXXXXX XXXXXXXX XXXXXXXX XXXXXXXX XXXXXXXX							

Notes
6. SYSC_SPCCFGR:FASTON register bit is reserved and should be always written as ’0’, since this device does not support “Fast Power domain control” feature.
7. SCCFG_STAT1:EEFCEEN and SCCFG_STAT1:TCFCEEN register bits are read-1(write has no impact and read always returns ’1’) in this device.
8. SCCFG_STAT1:FPPEN and SCCFG_STAT1:SCMEN register bits are read-0 (write has no impact and read always returns ’0’) in this device.

Electrical Characteristics

Absolute Maximum Ratings

WARNING: Semiconductor devices can be permanently damaged by application of stress (voltage, current, temperature, etc.) in excess of absolute maximum ratings. Do not exceed these ratings.

Table 46. Absolute Maximum Ratings

Parameter	Symbol	Rating		Unit	Remarks
		Min	Max		
Power supply voltage	V_{DP5}	V_{SS} - 0.3	V_{SS} + 6.0	V	–
	V_{DP3}	V_{SS} - 0.3	V_{SS} + 4.0	V	–
	V_{DD}	V_{SS} - 0.3	V_{SS} + 1.8	V	–
	AV_{DD5}	AV_{SS5} - 0.3	AV_{SS5} + 6.0	V	$V_{DP5} = AV_{DD5}$ [9]
	V_{DE5}	V_{SS} - 0.3	V_{SS} + 6.0	V	–
	V_{DEA}	V_{SS} - 0.3	V_{SS} + 4.0	V	–
	V_{DDA}	V_{SS} - 0.3	V_{SS} + 1.8	V	–
AD Converter voltage references	AV_{RH5}	AV_{SS5} - 0.3	AV_{SS5} + 6.0	V	$AV_{DD5} \geq AV_{RH5}$, $AV_{RH5} \geq AV_{SS5}$
SMC Power supply	DV_{CC}	DV_{SS} - 0.3	DV_{SS} + 6.0	V	See Note [12] $V_{DP5} = AV_{DD5} = DV_{CC}$ when ZPD functionality is used.
Analog input voltage	V_{IA}	AV_{SS5} - 0.3	AV_{DD5} + 0.3	V	–
Input voltage	V_I	V_{SS} - 0.3	V_{DP5} + 0.3	V	$V_I \leq$ - DV_{CC},V_{DP5} + 0.3V [10]
		V_{SS} - 0.3	V_{DP3} + 0.3	V	–
		DV_{SS} - 0.3	DV_{CC} + 0.3	V	–
Output voltage	V_O	V_{SS} - 0.3	V_{DP5} + 0.3	V	$V_O \leq$ - DV_{CC},V_{DP5} + 0.3V [10]
		V_{SS} - 0.3	V_{DP3} + 0.3	V	–
		DV_{SS} - 0.3	DV_{CC} + 0.3	V	–
Maximum Clamp Current	I_{CLAMP}	-4	+4	mA	Applicable to general purpose I/O pins[11]
		-30	+30	mA	Applicable to SMC I/O pins[13]
Total Maximum Clamp Current	$\Sigma\|I_{CLAMP}\|$	–	20	mA	Applicable to general purpose I/O pins[11]
	$\Sigma I_{CLAMPpos}$	–	+360	mA	Applicable to SMC I/O pins[13] clamping current occurred by sudden switching-off of inductive load (stepper motor coil).
	$\Sigma I_{CLAMPneg}$	- 360	–	mA	Applicable to SMC I/O pins[13] clamping current occurred by sudden switching-off of inductive load (stepper motor coil).
	$\Sigma\|I_{CLAMPAV}\|$	–	20	mA	Applicable to SMC I/O pins[13]. Total max average over 100 µs.
"L" level maximum output current	I_{OL1}	–	2	mA	Normal outputs (BIDI50) with driving strength set to 1mA
	I_{OL2}	–	4	mA	Normal outputs (BIDI50) with driving strength set to 2mA
	I_{OL5}	–	10	mA	Normal outputs (BIDI50) with driving strength set to 5mA
	I_{OLI2C}	–	6	mA	I2C outputs (I2C) with driving strength set to 3mA
	I_{OLHSIO}	–	24	mA	High Speed outputs (BIDI33) with driving strength set to 12mA
	I_{OLSMC}	–	40	mA	SMC outputs (SMC) with driving strength set to 30mA

Table 46. Absolute Maximum Ratings (Continued)

Parameter	Symbol	Rating		Unit	Remarks
		Min	Max		
"L" level maximum overall output current	ΣI_{OLVDP5}	–	100	mA	–
	ΣI_{OLVDP3}	–	100	mA	–
	ΣI_{OLDVCC}	–	360	mA	–
"L" level average output current	I_{OLAV1}	–	1	mA	Normal outputs (BIDI50) with driving strength set to 1mA
	I_{OLAV2}	–	2	mA	Normal outputs (BIDI50) with driving strength set to 2mA
	I_{OLAV5}	–	5	mA	Normal outputs (BIDI50) with driving strength set to 5mA
	$I_{OLAVI2C}$	–	3	mA	I2C outputs (I2C) with driving strength set to 3mA
	$I_{OLAVHSIO}$	–	12	mA	High Speed outputs (BIDI33) with driving strength set to 12mA
	$I_{OLAVSMC}$	–	30	mA	SMC outputs (SMC) with driving strength set to 30mA
"L" level average overall output current	$\Sigma I_{OLAVDP5}$	–	50	mA	–
	$\Sigma I_{OLAVDP3}$	–	50	mA	–
	$\Sigma I_{OLADVCC}$	–	230	mA	–
"H" level maximum output current	I_{OH1}	–	-2	mA	Normal outputs (BIDI50) with driving strength set to 1mA
	I_{OH2}	–	-4	mA	Normal outputs (BIDI50) with driving strength set to 2mA
	I_{OH5}	–	-10	mA	Normal outputs (BIDI50) with driving strength set to 5mA
	I_{OHI2C}	–	-6	mA	I2C outputs (I2C) with driving strength set to 3mA
	I_{OHHSIO}	–	-24	mA	High Speed outputs (BIDI33) with driving strength set to 12mA
	I_{OHSMC}	–	-40	mA	SMC outputs (SMC) with driving strength set to 30mA
"H" level maximum overall output current	ΣI_{OHVDP5}	–	-100	mA	–
	ΣI_{OHVDP3}	–	-100	mA	–
	ΣI_{OHDVCC}	–	-360	mA	–
"H" level average output current	I_{OHAV1}	–	-1	mA	Normal outputs (BIDI50) with driving strength set to 1mA
	I_{OHAV2}	–	-2	mA	Normal outputs (BIDI50) with driving strength set to 2mA
	I_{OHAV5}	–	-5	mA	Normal outputs (BIDI50) with driving strength set to 5mA
	$I_{OHAVI2C}$	–	-3	mA	I2C outputs (I2C) with driving strength set to 3mA
	$I_{OHAVHSIO}$	–	-12	mA	High Speed outputs (BIDI33) with driving strength set to 12mA
	$I_{OHAVSMC}$	–	-30	mA	SMC outputs (SMC) with driving strength set to 30mA
"H" level average overall output current	$\Sigma I_{OHAVDP5}$	–	-50	mA	–
	$\Sigma I_{OHAVDP3}$	–	-50	mA	–
	$\Sigma I_{OHADVCC}$	–	-230	mA	–
Power consumption	P_{TOT}	–	2000	mW	–

Table 46. Absolute Maximum Ratings (Continued)

Parameter	Symbol	Rating		Unit	Remarks
		Min	Max		
Operating ambient temperature	T_A	-40	105	°C	–
Storage temperature	T_{STG}	-55	150	°C	–

Notes

9. AV_{DD5} and V_{DP5} must be set to the same voltage. It is required that AV_{DD5} does not exceed V_{DP5} and that the voltage at the analog inputs does not exceed AV_{DD5} neither when the power is switched on.
10. V_I and V_O should not exceed V_{DP5} + 0.3 V. V_I should also not exceed the specified ratings. However if the maximum current to/from a input is limited by some means with external components, the I_{CLAMP} rating supersedes the V_I rating. Input/output voltages of standard ports depend on V_{DP5}.
11. Clamping current limitation:
    - ❒ Applicable to all general purpose I/O pins (Pi_jj)
    - ❒ Use within recommended operating conditions.
    - ❒ Use at DC voltage (current).
    - ❒ +B signals are input signals that exceed the VDP5 / VDP3 / DVcc voltage.
    - ❒ The +B signals should always be applied a limiting resistance placed between the +B signal and the microcontroller.
    - ❒ The value of the limiting resistance should be set so that when the +B signal is applied the input current to the microcontroller pin does not exceed rated values, either instantaneously or for prolonged periods.
    - ❒ Note that when the microcontroller drive current is low, such as in the power saving modes, the +B input potential may pass through the protective diode and increase the potential at the V_{DP5} pin, and this may affect other devices.
    - ❒ Note that if a +B signal is input when the microcontroller power supply is off (not fixed at 0 V), the power supply is provided from the pins, so that incomplete operation may result.
    - ❒ Note that if the +B input is applied during power-on, the power supply is provided from the pins and the resulting supply voltage may not be sufficient to operate the Power reset (except devices with persistent low voltage reset in internal vector mode).
    - ❒ Sample recommended circuits:

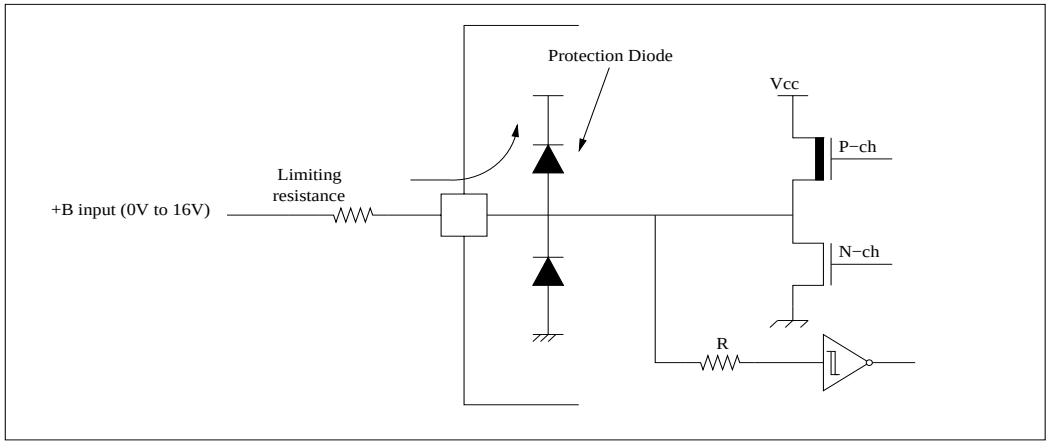

12. DV_{CC}, AV_{DD5} and V_{DP5} must be set to the same voltage during zero point detection (ZPD) on any of the SMC ports. If zero point detection is not required on any of the SMC ports, then DV_{CC} can have any value with-in absolute rating, provided switches are disabled by RICFG0_ADC0ZPDEN:ZPDEN register. Note, for ZPD, conversion time will be more and accuracy of measurement will be low.
13. Clamping current limitation for SMC pins (refer to the Clamping structire in Figure 3):
    - Clamping current occurred by sudden switching-off for an inductive load (stepper motor coils).
    - The Clamping structure of high current SMC pins is independent on the drive strength settings.

Figure 3. ESD Protection Structure for SMC Pins

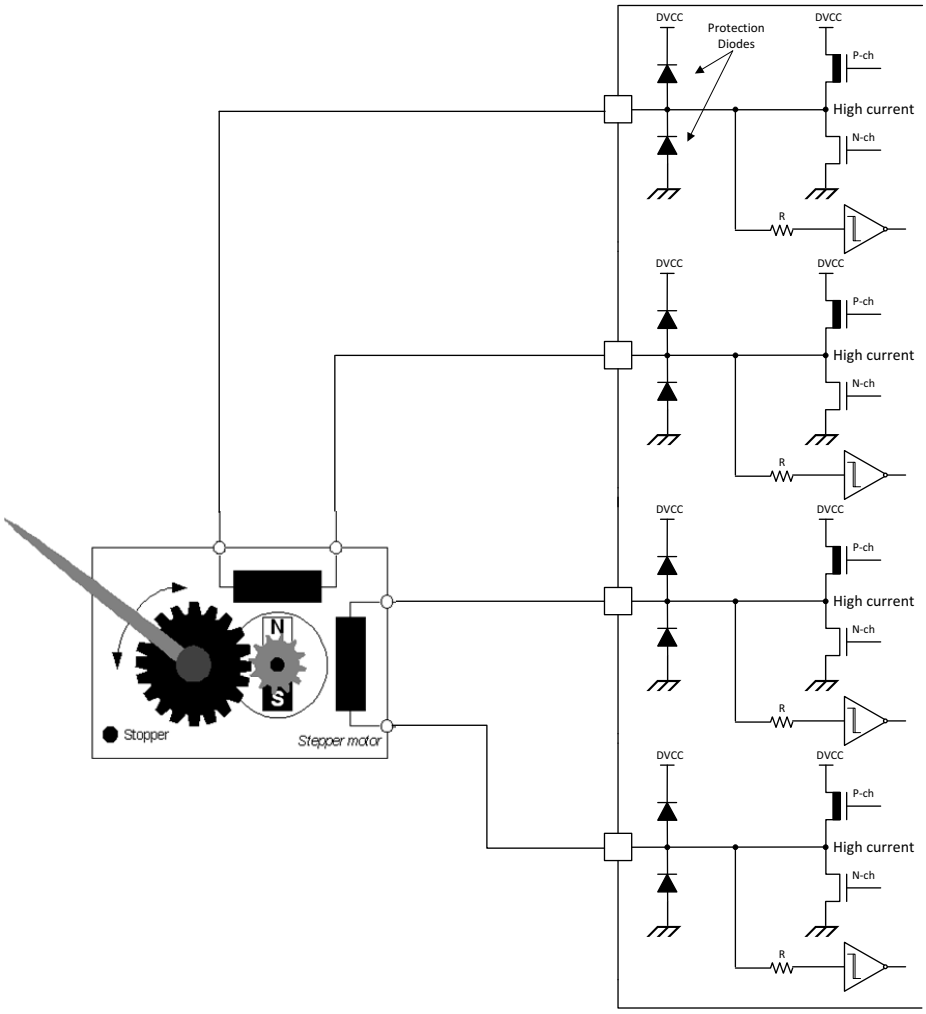

Recommended Operating Conditions

Table 47. Recommended Operating Conditions

Parameter	Symbol	Value			Unit	Remarks
		Min	Typ	Max		
5V power supply voltage	V_{DP5}	3.0	3.3/5.0	5.5	V	
3.3V power supply voltage	V_{DP3}	3.0	3.3	3.6	V	
1.2V power supply voltage	V_{DD}	1.1	1.2	1.3	V	
Analog 5V power supply voltage	V_{DE5}	3.0	3.3/5.0	5.5	V	
Analog 3.3V power supply voltage	V_{DEA}	3.0	3.3	3.6	V	
Analog 1.2V power supply voltage	V_{DDA}	1.1	1.2	1.3	V	
SMC power supply voltage	DV_{CC}	4.5	5.0	5.5	V	If used as SMC
	DV_{CC}	3.0	3.3/5.0	5.5	V	If used as GPIO
Analog power supply voltage	AV_{DD5}	3.0	3.3/5.0	5.5	V	
AD Converter voltage reference	AV_{RH5}	AV_{DD5} - 0.5	-	AV_{DD5}	V	
Operation ambient temperature	T_{OP}	-40	-	105	°C	

WARNING

- The recommended operating conditions are required in order to ensure the normal operation of the semiconductor device. All of the device's electrical characteristics are warranted when the device is operated within these ranges.
- Always use semiconductor devices within their recommended operating condition ranges. Operation outside these ranges may adversely affect reliability and could result in device failure.
- No warranty is made with respect to uses, operating conditions, or combinations not represented on the data sheet. Users considering application outside the listed conditions are advised to contact their representatives beforehand.

DC Characteristics

Table 48. DC Characteristics

(T_A = -40°C to 105°C, V_{DD} = V_{DDA} = 1.1V to 1.3V, V_{DP3} = V_{DEA} = 3.0V to 3.6V, V_{DP5} = AV_{DD5} = V_{DE5} = 3.0V to 5.5V; DV_{CC} = 3.0V to 5.5V, V_{SS} = AV_{SS5} = DV_{SS} = 0V)

Parameter	Symbol	Pin	Condition	Value			Unit	Remarks
				Min	Typ	Max		
Input “H” voltage	V_{IH}	Port inputs Pi_jj	BIDI50 / SMC CMOS	0.8 x V_{DP5}	-	V_{DP5}	V	4.5V ≤ V_{DP5} ≤ 5.5V
				0.8 x V_{DP5}	-	V_{DP5}	V	3.0V ≤ V_{DP5} ≤ 3.6V
			BIDI50 / SMC Hysteresis	0.8 x V_{DP5}	-	V_{DP5}	V	4.5V ≤ V_{DP5} ≤ 5.5V
				0.8 x V_{DP5}	-	V_{DP5}	V	3.0V ≤ V_{DP5} ≤ 3.6V
			BIDI50 / SMC / I2C AUTOMOTIVE	0.8 x V_{DP5}	-	V_{DP5}	V	4.5V ≤ V_{DP5} ≤ 5.5V
				0.8 x V_{DP5}	-	V_{DP5}	V	3.0V ≤ V_{DP5} ≤ 3.6V
			BIDI50 / SMC / I2C TTL	2.0	-	V_{DP5}	V	4.5V ≤ V_{DP5} ≤ 5.5V
				2.0	-	V_{DP5}	V	3.0V ≤ V_{DP5} ≤ 3.6V
			I2C CMOS	0.7 x V_{DP5}	-	V_{DP5}	V	4.5V ≤ V_{DP5} ≤ 5.5V
				0.7 x V_{DP5}	-	V_{DP5}	V	3.0V ≤ V_{DP5} ≤ 3.6V
			I2C Hysteresis	0.7 x V_{DP5}	-	V_{DP5}	V	4.5V ≤ V_{DP5} ≤ 5.5V
				0.7 x V_{DP5}	-	V_{DP5}	V	3.0V ≤ V_{DP5} ≤ 3.6V
	V_{IH}	XTAL0	20 MHz Oscillator	0.8 x V_{DP5}	-	V_{DP5}	V	4.5V ≤ V_{DP5} ≤ 5.5V
				0.8 x V_{DP5}		V_{DP5}	V	3.0V ≤ V_{DP5} ≤ 3.6V
	V_{IH}	X0	4 MHz Oscillator	0.8 x V_{DP5}	-	V_{DP5}	V	4.5V ≤ V_{DP5} ≤ 5.5V
				0.8 x V_{DP5}		V_{DP5}	V	3.0V ≤ V_{DP5} ≤ 3.6V
	V_{IH}	X0A	32 KHz Oscillator	0.8 x V_{DP5}	-	V_{DP5}	V	4.5V ≤ V_{DP5} ≤ 5.5V
				0.8 x V_{DP5}		V_{DP5}	V	3.0V ≤ V_{DP5} ≤ 3.6V
	V_{IHXDF}	X0, XTAL0	External clock iN “Fast Clock Input mode”	0.7 x V_{DP5}	-	V_{DP5}	V	4.5V ≤ V_{DP5} ≤ 5.5V
				0.7 x V_{DP5}		V_{DP5}	V	3.0V ≤ V_{DP5} ≤ 3.6V
	V_{IHXOS}	X0,X1, X0A, X1A	External clock in “oscillation mode”	0.8 x V_{DP5}	-	V_{DP5}	V	4.5V ≤ V_{DP5} ≤ 5.5V
				0.8 x V_{DP5}		V_{DP5}	V	3.0V ≤ V_{DP5} ≤ 3.6V
	V_{IHR}	RSTX	MODE/RSTX Hysteresis	0.7 x V_{DP5}	-	V_{DP5}	V	4.5V ≤ V_{DP5} ≤ 5.5V
				0.7 x V_{DP5}	-	V_{DP5}	V	3.0V ≤ V_{DP5} ≤ 3.6V
	V_{IHM}	MODE	MODE/RSTX Hysteresis	0.7 x V_{DP5}	-	V_{DP5}	V	4.5V ≤ V_{DP5} ≤ 5.5V
				0.7 x V_{DP5}	-	V_{DP5}	V	3.0V ≤ V_{DP5} ≤ 3.6V
	V_{IHHSIO}	pi_jj	BIDI33 Hysteresis	0.8 x V_{DP3}	-	V_{DP3}	V	3.0V ≤ V_{DP3} ≤ 3.6V
			BIDI33 TTL	2	-	V_{DP3}	V	3.0V ≤ V_{DP3} ≤ 3.6V
Input “L“ voltage	V_{IL}	Port inputs pi_jj	BIDI50 / SMC CMOS	V_{SS}	-	0.2 x V_{DP5}	V	4.5V ≤ V_{DP5} ≤ 5.5V
				V_{SS}	-	0.2 x V_{DP5}	V	3.0V ≤ V_{DP5} ≤ 3.6V
			BIDI50 / SMC Hysteresis	V_{SS}	-	0.2 x V_{DP5}	V	4.5V ≤ V_{DP5} ≤ 5.5V
				V_{SS}	-	0.2 x V_{DP5}	V	3.0V ≤ V_{DP5} ≤ 3.6V
			BIDI50 / SMC / I2C AUTOMOTIVE	V_{SS}	-	0.5 x V_{DP5}	V	4.5V ≤ V_{DP5} ≤ 5.5V
				V_{SS}	-	0.3 x V_{DP5}	V	3.0V ≤ V_{DP5} ≤ 3.6V
			BIDI50 / SMC / I2C TTL	V_{SS}	-	0.8	V	4.5V ≤ V_{DP5} ≤ 5.5V
				V_{SS}	-	0.8	V	3.0V ≤ V_{DP5} ≤ 3.6V
			I2C CMOS	V_{SS}	-	0.3 x V_{DP5}	V	4.5V ≤ V_{DP5} ≤ 5.5V
				V_{SS}	-	0.2 x V_{DP5}	V	3.0V ≤ V_{DP5} ≤ 3.6V
			I2C Hysteresis	V_{SS}	-	0.3 x V_{DP5}	V	4.5V ≤ V_{DP5} ≤ 5.5V
				V_{SS}	-	0.2 x V_{DP5}	V	3.0V ≤ V_{DP5} ≤ 3.6V
	V_{IL}	XTAL0	20 MHz Oscillator	V_{SS}	-	0.2 x V_{DP5}	V	4.5V ≤ V_{DP5} ≤ 5.5V
				V_{SS}		0.2 x V_{DP5}	V	3.0V ≤ V_{DP5} ≤ 3.6V

Table 48. DC Characteristics (Continued)

(T_A = -40°C to 105°C, V_{DD} = V_{DDA} = 1.1V to 1.3V, V_{DP3} = V_{DEA} = 3.0V to 3.6V, V_{DP5} = AV_{DD5} = V_{DE5} = 3.0V to 5.5V; DV_{CC} = 3.0V to 5.5V, V_{SS} = AV_{SS5} = DV_{SS} = 0V)

Parameter	Symbol	Pin	Condition	Value			Unit	Remarks
				Min	Typ	Max		
Input “L“ voltage	V_{IL}	X0	4 MHz Oscillator	V_{SS}	-	0.2 x V_{DP5}	V	4.5V ≤ V_{DP5} ≤ 5.5V
				V_{SS}		0.2 x V_{DP5}	V	3.0V ≤ V_{DP5} ≤ 3.6V
	V_{IL}	X0A	32 KHz Oscillator	V_{SS}	-	0.2 x V_{DP5}	V	4.5V ≤ V_{DP5} ≤ 5.5V
				V_{SS}		0.2 x V_{DP5}	V	3.0V ≤ V_{DP5} ≤ 3.6V
	V_{ILX0F}	X0, XTAL0	External clock in"Fast Clock Input mode"	V_{SS}	-	0.3 x V_{DP5}	V	4.5V ≤ V_{DP5} ≤ 5.5V
				V_{SS}		0.3 x V_{DP5}	V	3.0V ≤ V_{DP5} ≤ 3.6V
	V_{ILX0S}	X0,X1 X0A,X1A	External clock in “oscillation mode”	V_{SS}	-	0.2 x V_{DP5}	V	4.5V ≤ V_{DP5} ≤ 5.5V
				V_{SS}		0.2 x V_{DP5}	V	3.0V ≤ V_{DP5} ≤ 3.6V
	V_{ILR}	RSTX	MODE/RSTX Hysteresis	V_{SS}	-	0.3 x V_{DP5}	V	4.5V ≤ V_{DP5} ≤ 5.5V
				V_{SS}	-	0.3 x V_{DP5}	V	3.0V ≤ V_{DP5} ≤ 3.6V
	V_{ILM}	MODE	MODE/RSTX Hysteresis	V_{SS}	-	0.3 x V_{DP5}	V	4.5V ≤ V_{DP5} ≤ 5.5V
				V_{SS}	-	0.3 x V_{DP5}	V	3.0V ≤ V_{DP5} ≤ 3.6V
	V_{ILHSIO}	pi_jj	BIDI33 Hysteresis	V_{SS}	-	0.2 x V_{DP3}	V	3.0V ≤ V_{DP3} ≤ 3.6V
			BIDI33 TTL	V_{SS}	-	0.8	V	3.0V ≤ V_{DP3} ≤ 3.6V
Hysteresis	V_{HYS}	Port inputs pi_jj	BIDI50 / SMC CMOS	-	-	-	V	4.5V ≤ V_{DP5} ≤ 5.5V
				-	-	-	V	3.0V ≤ V_{DP5} ≤ 3.6V
			BIDI50 / SMC Hysteresis	0.05 x V_{DP5}	-	-	V	4.5V ≤ V_{DP5} ≤ 5.5V
				0.05 x V_{DP5}	-	-	V	3.0V ≤ V_{DP5} ≤ 3.6V
			BIDI50 / SMC / I2C AUTOMOTIVE	0.35	-	-	V	4.5V ≤ V_{DP5} ≤ 5.5V
				0.35	-	-	V	3.0V ≤ V_{DP5} ≤ 3.6V
			BIDI50 / SMC / I2C TTL	0.1	-	-	V	4.5V ≤ V_{DP5} ≤ 5.5V
				0.1	-	-	V	3.0V ≤ V_{DP5} ≤ 3.6V
			I2C CMOS	-	-	-	V	4.5V ≤ V_{DP5} ≤ 5.5V
				-	-	-	V	3.0V ≤ V_{DP5} ≤ 3.6V
			I2C Hysteresis	0.05 x V_{DP5}	-	-	V	4.5V ≤ V_{DP5} ≤ 5.5V
				0.05 x V_{DP5}	-	-	V	3.0V ≤ V_{DP5} ≤ 3.6V
		XTAL0	20 MHz Oscillator	0.05 x V_{DP5}	-	-	V	4.5V ≤ V_{DP5} ≤ 5.5V
				0.05 x V_{DP5}		-	V	3.0V ≤ V_{DP5} ≤ 3.6V
		X0	4 MHz Oscillator	0.05 x V_{DP5}	-	-	V	4.5V ≤ V_{DP5} ≤ 5.5V
				0.05 x V_{DP5}		-	V	3.0V ≤ V_{DP5} ≤ 3.6V
		X0A	32 KHz Oscillator	0.05 x V_{DP5}	-	-	V	4.5V ≤ V_{DP5} ≤ 5.5V
				0.05 x V_{DP5}			V	3.0V ≤ V_{DP5} ≤ 3.6V
		X0, XTAL0	External clock in “Fast Clock Input mode”	0.05 x V_{DP5}	-	-	V	4.5V ≤ V_{DP5} ≤ 5.5V
				0.05 x V_{DP5}		-	V	3.0V ≤ V_{DP5} ≤ 3.6V
		X0,X1, X0A, X1A	External clock in “oscillation mode”	0.05 x V_{DP5}	-	-	V	4.5V ≤ V_{DP5} ≤ 5.5V
				0.05 x V_{DP5}			V	3.0V ≤ V_{DP5} ≤ 3.6V
		RSTX	MODE/RSTX Hysteresis	0.05 x V_{DP5}	-	-	V	4.5V ≤ V_{DP5} ≤ 5.5V
				0.05 x V_{DP5}	-	-	V	3.0V ≤ V_{DP5} ≤ 3.6V
		MODE	MODE/RSTX Hysteresis	0.05 x V_{DP5}	-	-	V	4.5V ≤ V_{DP5} ≤ 5.5V
				0.05 x V_{DP5}	-	-	V	3.0V ≤ V_{DP5} ≤ 3.6V
		pi_jj	BIDI33 Hysteresis	0.05 x V_{DP3}	-	-	V	3.0V ≤ V_{DP3} ≤ 3.6V
			BIDI33 TTL	0.1	-	-	V	3.0V ≤ V_{DP3} ≤ 3.6V

Table 48. DC Characteristics (Continued)

(T_A = -40°C to 105°C, V_{DD} = V_{DDA} = 1.1V to 1.3V, V_{DP3} = V_{DEA} = 3.0V to 3.6V, V_{DP5} = AV_{DD5} = V_{DE5} = 3.0V to 5.5V; DV_{CC} = 3.0V to 5.5V, V_{SS} = AV_{SS5} = DV_{SS} = 0V)

Parameter	Symbol	Pin	Condition	Value			Unit	Remarks
				Min	Typ	Max		
Output "H" voltage	V_{OH1}	BIDI50 /SMC / I2C outputs (VDP5)	4.5V ≤ V_{DP5} ≤ 5.5V I_{OH} = -1mA 3.0V ≤ V_{DP5} ≤ 3.6V I_{OH} = -0.8mA	V_{DP5} - 0.5	-	-	V	Driving strength set to 1mA
	V_{OH2}	BIDI50 /SMC / I2C outputs (VDP5)	4.5V ≤ V_{DP5} ≤ 5.5V I_{OH} = -2mA 3.0V ≤ V_{DP5} ≤ 3.6V I_{OH} = -1.5mA	V_{DP5} - 0.5	-	-	V	Driving strength set to 2mA
	V_{OH5}	BIDI50 /SMC / I2C outputs (VDP5)	4.5V ≤ V_{DP5} ≤ 5.5V I_{OH} = -5mA 3.0V ≤ V_{DP5} ≤ 3.6V I_{OH} = -3mA	V_{DP5} - 0.5	-	-	V	Driving strength set to 5mA
	V_{OH3}	I^2C outputs (VDP5)	4.5V ≤ V_{DP5} ≤ 5.5V 3.0V ≤ V_{DP5} ≤ 3.6V	-	-	-	V	Pseudo Open Drain (HIZ for logic value "1")
	V_{OHSMC}	SMC outputs (DVCC)	4.5V ≤ DV_{CC} ≤ 5.5V I_{OH} = -30mA 3.0V ≤ DV_{CC} ≤ 3.6V I_{OH} = -20mA	DV_{CC} - 0.5	-	DV_{CC}	V	Driving strength set to 30mA
	V_{OH3X}	32 KHz oscillator outputs (VDP5)	4.5V ≤ V_{DP5} ≤ 5.5V I_{OH} = -20µA 3.0V ≤ V_{DP5} ≤ 3.6V I_{OH} = -11µA	V_{DP5} - 1.3	-	V_{DP5}	V	-
	V_{OH4X}	4 MHz oscillator outputs (VDP5)	4.5V ≤ V_{DP5} ≤ 5.5V I_{OH} = -200µA 3.0V ≤ V_{DP5} ≤ 3.6V I_{OH} = -115µA	V_{DP5} - 0.9	-	V_{DP5}	V	-
	V_{OH2X}	20 MHz oscillator outputs (VDP5)	4.5V ≤ V_{DP5} ≤ 5.5V I_{OH} = -1.3mA 3.0V ≤ V_{DP5} ≤ 3.6V I_{OH} = -0.7mA	V_{DP5} - 0.5	-	V_{DP5}	V	-
	V_{OH12}	BIDI33 outputs (VDP3)	3.0V ≤ V_{DP3} ≤ 3.6V I_{OH} = -11mA	V_{DP3} - 0.5	-	V_{DP3}	V	Driving strength set to 11mA
Output "L" voltage	V_{OL1}	BIDI50 /SMC / I2C outputs (VDP5)	4.5V ≤ V_{DP5} ≤ 5.5V I_{OL} = +1mA 3.0V ≤ V_{DP5} ≤ 3.6V I_{OL} = +0.8mA	V_{SS}	-	0.4		Driving strength set to 1mA
	V_{OL2}	BIDI50 /SMC / I2C outputs (VDP5)	4.5V ≤ V_{DP5} ≤ 5.5V I_{OL} = +2mA 3.0V ≤ V_{DP5} ≤ 3.6V I_{OL} = +1.5mA	V_{SS}	-	0.4	V	Driving strength set to 2mA
	V_{OL5}	BIDI50 /SMC / I2C outputs (VDP5)	4.5V ≤ V_{DP5} ≤ 5.5V I_{OL} = +5mA 3.0V ≤ V_{DP5} ≤ 3.6V I_{OL} = +3mA	V_{SS}	-	0.4	V	Driving strength set to 5mA

Table 48. DC Characteristics (Continued)

(T_A = -40°C to 105°C, V_{DD} = V_{DDA} = 1.1V to 1.3V, V_{DP3} = V_{DEA} = 3.0V to 3.6V, V_{DP5} = AV_{DD5} = V_{DE5} = 3.0V to 5.5V; DV_{CC} = 3.0V to 5.5V, V_{SS} = AV_{SS5} = DV_{SS} = 0V)

Parameter	Symbol	Pin	Condition	Value			Unit	Remarks
				Min	Typ	Max		
Output "L" voltage	V_{OL3}	I2C outputs (VDP5)	4.5V ≤ V_{DP5} ≤ 5.5V I_{OL} = +3mA	V_{SS}	-	0.4	V	Driving strength set to 3mA
			3.0V ≤ V_{DP5} ≤ 3.6V I_{OL} = +1.7mA					
	V_{OLSMC}	SMC outputs DVCC)	4.5V ≤ DV_{CC} ≤ 5.5V I_{OH} = -30mA	DV_{SS}	-	0.5	V	Driving strength set to 30mA
			3.0V ≤ DV_{CC} ≤ 3.6V I_{OH} = -20mA					
	V_{OL3X}	32 KHz oscillator outputs (VDP5)	4.5V ≤ V_{DP5} ≤ 5.5V I_{OH} = +20µA	V_{SS}	-	1.2	V	-
			3.0V ≤ V_{DP5} ≤ 3.6V I_{OH} = +11µA					
	V_{OL3X}	4 MHz oscillator outputs (VDP5)	4.5V ≤ V_{DP5} ≤ 5.5V I_{OH} = +200µA	V_{SS}	-	1.2	V	-
			3.0V ≤ V_{DP5} ≤ 3.6V I_{OH} = +115µA					
	V_{OL4X}	20 MHz oscillator outputs (VDP5)	4.5V ≤ V_{DP5} ≤ 5.5V I_{OH} = -1.3mA	V_{SS}	-	0.5	V	-
			3.0V ≤ V_{DP5} ≤ 3.6V I_{OH} = -0.7mA					
	V_{OL12}	Normal outputs (VDP3)	3.0V ≤ V_{DP3} ≤ 3.6V I_{OL} = +11mA	V_{SS}	-	0.4	V	Driving strength set to 11mA
Input leak current	I_{IL}	pi_jj (GPIO)	-	-1	-	+1	µA	T_A = 25°C
			-	-3	-	+3	µA	T_A = 105°C
		pi_jj (ANIN)	-	-1	-	+1	µA	T_A = 25°C
			-	-3	-	+3	µA	T_A = 105°C
Total input leakage current	ΣI_{IL}	pi_jj (GPIO, ANIN)	V_{DP5} ≥ V_{IN} ≥ V_{SS} AV_{DD5} ≥V_{IN} ≥ AV_{SS5} Σ(1 to n) [max (|I_LHi|,|I_LLi|)] I_LH: leakage at high level input I_LL: leakage at low level input	-	-	15	µA	i = number of IO = 30 GPIO (in VDP5 IO domain)
		pi_jj (GPIO)	V_{DP3} ≥ V_{IN} ≥ V_{SS} Σ(1 to n) [max(|I_LHi|,|I_LLi|)] I_LH: leakage at high level input I_LL: leakage at low level input	-	-	30	µA	i = number of IO = 58 GPIO (in VDP3 IO domain)
		pi_jj (GPIO)	DV_{CC} ≥ V_{IN} ≥ V_{SS} Σ(1 to n) [max(|I_LHi|,|I_LLi|)] I_LH: leakage at high level input I_LL: leakage at low level input	-	-	15	µA	i = number of IO = 24 GPIO (in DVCC IO domain)
Pull-up resistance	R_{UP}	pi_jj (BIDI50/ SMC/I2C)	-	25	50	100	kΩ	4.5V ≤ V_{DP5} ≤ 5.5V
			-	25	50	200	kΩ	3.0V ≤ V_{DP5} ≤ 3.6V
		pi_jj (BIDI33)	-	15	33	80	kΩ	3.0V ≤ V_{DP3} ≤ 3.6V

Table 48. DC Characteristics (Continued)

(T_A = -40°C to 105°C, V_{DD} = V_{DDA} = 1.1V to 1.3V, V_{DP3} = V_{DEA} = 3.0V to 3.6V, V_{DP5} = AV_{DD5} = V_{DE5} = 3.0V to 5.5V; DV_{CC} = 3.0V to 5.5V, V_{SS} = AV_{SS5} = DV_{SS} = 0V)

Parameter	Symbol	Pin	Condition	Value			Unit	Remarks
				Min	Typ	Max		
Pull-down resistance	R_{DN}	pi_jj (BIDI50/ SMC/I2C)	-	25	50	100	kΩ	4.5V ≤ V_{DP5} ≤ 5.5V
			-	25	50	200	kΩ	3.0V ≤ V_{DP5} ≤ 3.6V
		pi_jj (BIDI33)	-	15	33	80	kΩ	3.0V ≤ V_{DP3} ≤ 3.6V
Low voltage detection current	I_{LYDETI}	(VDP5)	-	-	30	80	µA	Operational
				-	0.008	5	µA	Standby
Main oscillator current (XTAL0/1)	I_{MOSCR}	(VDP5)	-	-	1.7	2.4	mA	Operational @ 20MHz load = 10pF
			-	-	1.0	1.6	mA	Operational @ 4MHz load = 10pF
	I_{MOSCS}	(VDP5)	-	-	-	5	µA	Standby
Sub oscillator current (32 kHz)	I_{SOSCR}	(VDP5)	-	-	10	25	µA	Operational
	I_{SOSCS}		-	-	-	3	µA	Standby
Slow RC oscillator current (100kHz)	I_{RCS}	(VDD)	-	-	2	6	µA	Operational
			-	-	-	0.1	µA	Standby
Fast RCO current (8 MHz)	I_{RFC8}	(VDD)	-	-	7	11	µA	Operational (average with trimming)
		(VDP5)	-	-	305	700	µA	Operational (average with trimming)
		(VDD)	-	-	0.01	3	µA	Standby
		(VDP5)	-	-	0.003	3	µA	Standby
Fast RCO current (12 MHz)	I_{RFC12}	(VDD)	-	-	11	16	µA	Operational (average with trimming)
		(VDP5)	-	-	416	1050	µA	Operational (average with trimming)
		(VDD)	-	-	0.01	3	µA	Standby
		(VDP5)	-	-	0.003	3	µA	Standby
Input capacitance	C_{IN}	-	-	-	5	15	pF	Other than supply pins

Table 49. DC Characteristics

(T_A = -40°C to 105°C, V_{DD} = V_{DDA} = 1.1V to 1.3V, V_{DP3} = V_{DEA} = 3.0V to 3.6V, V_{DP5} = AV_{DD5} = V_{DE5} = 3.0V to 5.5V, DV_{CC} = 3.0V to 5.5V, V_{SS} = AV_{SS5} = DV_{SS} = 0V)

Parameter	Symbol	Pin	Condition	Value			Temp	Remarks
				Typ	Max	Unit		
Power supply current in RUN mode	I_{CCRUN}	(VDD)	RUN mode current of PD1	-	16.6	mA	25°C	With all clocks at max frequency, Includes leakage of respective PD Includes VDDA current for APIX AIC Mode
				-	17.4		105°C	
		(VDD)	RUN mode current of PD2	-	58	mA	25°C	With all clocks at max frequency, Includes leakage of respective PD
				-	80		105°C	
		(VDD)	RUN mode current of PD3	-	139	mA	25°C	With all clocks at max frequency, Includes leakage of respective PD
				-	170		105°C	
		(VDD)	RUN mode current of PD4	-	1	mA	25°C	With all clocks at max frequency, Includes leakage of respective PD
				-	2		105°C	
Power supply current in PSS mode	I_{CCPSS}	(VDD)	Leakage current of PD1	-	0.075	mA	25°C	PCN:2901
				-	0.7		105°C	
		(VDD)	Leakage current of PD2 (excluding PD3)	-	2	mA	25°C	-
				-	16		105°C	
		(VDD)	Leakage current of PD3	-	2	mA	25°C	-
				-	22.8		105°C	
		(VDD)	Leakage current of PD4	-	0.015	mA	25°C	PCN:2901
				-	0.5		105°C	
		(VDDA)	Leakage current of APIX	-	0.05	mA	25°C	Applies only to CY9DF126B, CY9DF126C
				-	0.25		105°C	
Power supply current in Timer mode	$I_{CCTMAIN}$	(VDD)	Main Timer mode with CLKMC = 20MHz	-	0.6	mA	25°C	With PD2, PD3, PD4, switched off PCN:2901
				-	2.3		105°C	
	I_{CCTRCH}	(VDD)	RC Timer mode with CLKRC = 12MHz	-	0.6	mA	25°C	With PD2, PD3, PD4, switched off PCN:2901
				-	2.3		105°C	
	I_{CCTRCL}	(VDD)	Main Timer mode with CLKSRC = 100kHz	-	0.52	mA	25°C	With PD2, PD3, PD4, switched off PCN:2901
				-	2.2		105°C	
	I_{CCTSUB}	(VDD)	Sub Timer mode with CLKSC = 32kHz	-	0.52	mA	25°C	With PD2, PD3, PD4, switched off PCN:2901
				-	2.2		105°C	
TCFLASH Read current (64 MHz)	$I_{CCTCFLASHRD}$	(VDD)	Current for one Instruction Flash module	-	32.9	mA	105°C	Only applicable if PD3 is ON
		(VDP5)		-	21	mA	105°C	
TCFLASH Program/Erase current	$I_{CCTCFLASHPE}$	(VDD)		-	1.8	mA	105°C	
		(VDP5)		-	11.3	mA	105°C	
TCFLASH Sleep current	$I_{CCTCFLASHSB}$	(VDD)		-	412	µA	105°C	
		(VDP5)		-	11	µA	105°C	
EEFLASH Read current	$I_{CCEEFLASHRD}$	(VDD)	Current for one Data Flash module	-	28.1	mA	105°C	Only applicable if PD3 is ON
		(VDP5)		-	21	mA	105°C	
EEFLASH Program/Erase current	$I_{CCEEFLASHPE}$	(VDD)		-	1.8	mA	105°C	
		(VDP5)		-	11.3	mA	105°C	
EEFLASH Sleep current	$I_{CCEEFLASHSB}$	(VDD)		-	236	µA	105°C	
		(VDP5)		-	11	µA	105°C	
Power consumption	P_{OP}	-	-	-	1250	mW	-	

AC Characteristics

Source Clock Timing

(T_A = -40°C to 105°C, V_{DD} = V_{DDA} = 1.1V to 1.3V, V_{DP3} = V_{DEA} = 3.0V to 3.6V, V_{DP5} = AV_{DD5} = V_{DE5} = 3.0V to 5.5V, DV_{CC} = 3.0V to 5.5V, V_{SS} = AV_{SS5} = DV_{SS} = 0V)

Table 50. Source Clock Timing

Parameter	Symbol	PinW	Value			Unit	Remarks
			Min	Typ	Max		
Oscillator Clock frequency	f_c	XTAL0 XTAL1	-	-	20	MHz	When using a crystal oscillator, PLL off
			-	-	20	MHz	When using an opposite phase external clock, PLL off
			4	-	20	MHz	When using a crystal oscillator or opposite phase external clock, PLL on. PLL input clock divider (PLLDIVL) must be greater than 1 since PLL does not support input clock freq more than 16MHz. Please also see limitation for f_{PLLVCO} input frequency
Oscillator Clock frequency	f_{FCI}	XTAL0	0	-	62.5	MHz	When using a single phase external clock in “Fast Clock Input mode”, PLL off
			4	-	62.5	MHz	When using a single phase external clock in “Fast Clock Input mode”, PLL on PLL input clock divider (PLLDIVL) must be greater than 1 since PLL does not support input clock freq more than 16MHz.
Oscillator Clock frequency	f_{CL}	X0A, X1A	32	32.768	100	kHz	When using an oscillation circuit
			0	-	100	kHz	When using a opposite phase external clock
		X0A	0	-	50	kHz	When using a single phase external clock
Slow Clock frequency	f_{CRS}	-	50	100	150	kHz	When using slow frequency of RC oscillator
Fast RCO clock frequency	f_{CRF}		6.3	7.9	10.1	MHz	When using fast frequency of RC oscillator (8MHz mode) and SYSC_RCCFGR:TRM[7:0] = “0x7F”
			9.3	11.6	14.6	MHz	When using fast frequency of RC oscillator (12MHz mode) and SYSC_RCCFGR:TRM[7:0] = “0x7F”
Fast RCO clock stability	f_{PRCF}	-	-2	-	+2	%	T_A = 0..70°C
			-6	-	+6	%	T_A = -40..105°C
PLL Clock frequency	f_{CLKVCO}	-	200	-	400	MHz	Permitted VCO output frequency of PLL (CLKVCO) Please also see limitation for f_{PLLVCO} input frequency
PLL input frequency (after DIVL)	f_{PLLVCO}	-	4	-	16	MHz	Input frequency of PLL after PLLDIVL divider. PLL input clock divider (PLLDIVL) must be greater than 1, if the frequency at the Clock input exceeds 16MHz
PLL Phase jitter	T_{PSKEW}	-	-5	-	±5	ns	For CLKMC (PLL input clock) - 4 MHz, jitter coming from external oscillator, crystal or resonator is not yet recovered
Input clock pulse width	P_{WH}, P_{WL}	XTAL0 XTAL1	8	-	-	ns	Duty ratio is about 30% to 70%
Input clock pulse width	P_{WHL}, P_{WLL}	X0A, X1A	5	-	-	µs	

Figure 4. Source Clock Timing

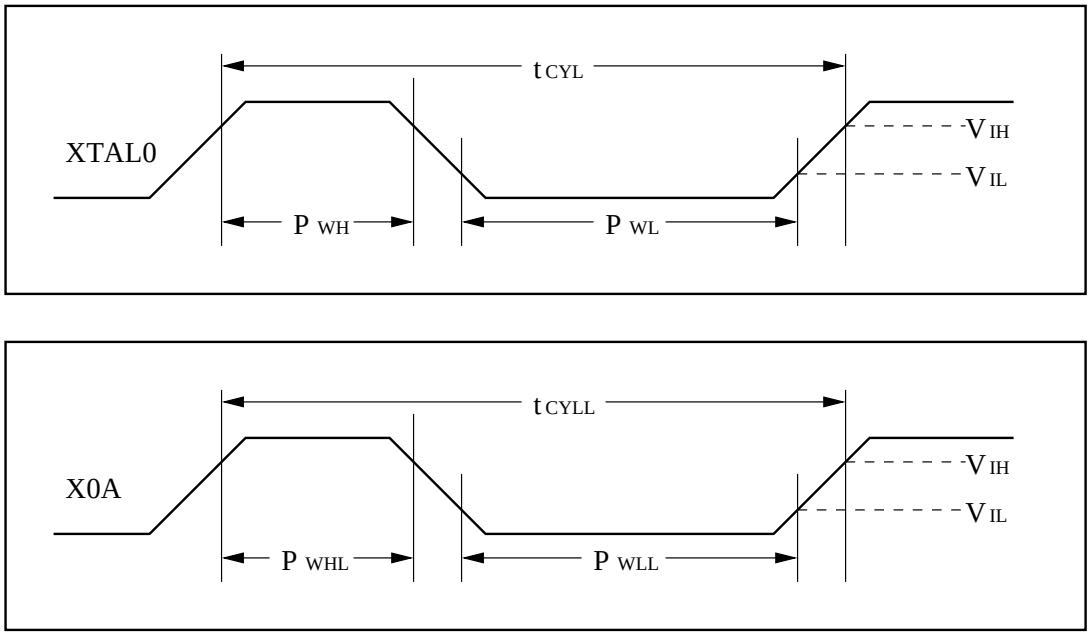

Internal Clock Timing

(T_A = -40°C to 105°C, V_{DD} = V_{DDA} = 1.1V to 1.3V, V_{DP3} = V_{DEA} = 3.0V to 3.6V, V_{DP5} = AV_{DD5} = V_{DE5} = 3.0V to 5.5V
DV_{CC} = 3.0V to 5.5V, V_{SS} = AV_{SS5} = DV_{SS} = 0V)

Table 51. Internal Clock Timing

Parameter	Symbol	Min	Max	Unit	Remarks
CLK_SYS_PD3	fCLK_SYS_PD3	0	128	MHz	–
CLK_DBG_PD2	fCLK_DBG_PD2	0	128	MHz	–
CLK_DBG_PD3	fCLK_DBG_PD3	0	128	MHz	–
CLK_TRACE_PD2	fCLK_TRACE_PD2	0	128	MHz	–
CLK_TRACE_PD3	fCLK_TRACE_PD3	0	128	MHz	–
CLK_HPM_PD2	fCLK_HPM_PD2	0	128	MHz	–
CLK_HPM_PD3	fCLK_HPM_PD3	0	128	MHz	–
CLK_CFG_PD4	fCLK_CFG_PD4	0	64	MHz	–
CLK_DMA_PD2	fCLK_DMA_PD2	0	128	MHz	–
CLK_MEM_I_PD3	fCLK_MEM_I_PD3	0	128	MHz	–
CLK_EXTBUS_PD3	fCLK_EXTBUS_PD3	0	64	MHz	–
CLK_MEM_E_PD3	fCLK_MEM_E_PD3	0	128	MHz	–
CLK_CFG_PD1	fCLK_CFG_PD1	0	64	MHz	–
CLK_PERI4_PD2	fCLK_PERI4_PD2	0	128	MHz	–
CLK_PERI0_PD2	fCLK_PERI0_PD2	0	64	MHz	–
CLK_PERI1_PD2	fCLK_PERI1_PD2	0	32	MHz	–
CLK_PERI3_PD2	fCLK_PERI3_PD2	0	64	MHz	–
CLK_SPI_PD3	fCLK_SPI_PD3	0	128	MHz	–
CKOT, CKOTX	fCKOT, fCKOTX	0	128	MHz	Internal clock, set clock divider >4 for output

External Reset Timing

(T_A = -40°C to 105°C, V_{DD} = V_{DDA} = 1.1V to 1.3V, V_{DP3} = V_{DEA} = 3.0V to 3.6V, V_{DP5} = AV_{DD5} = V_{DE5} = 3.0V to 5.5V DV_{CC} = 3.0V to 5.5V, V_{SS} = AV_{SS5} = DV_{SS} = 0V)

Table 52. External Reset Timing

Parameter	Symbol	Pin	Value			Unit	Remarks
			Min	Typ	Max		
Reset input time	t_{RSTL}	RSTX	500	-	-	ns	

Figure 5. External Reset Timing

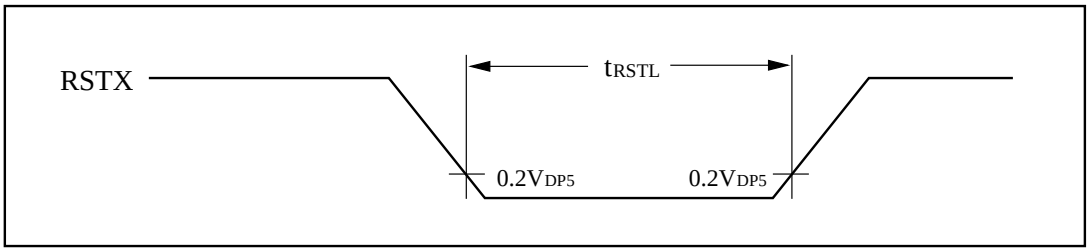

External Input Timing

(T_A = -40°C to 105°C, V_{DD} = V_{DDA} = 1.1V to 1.3V, V_{DP3} = V_{DEA} = 3.0V to 3.6V, V_{DP5} = AV_{DD5} = V_{DE5} = 3.0V to 5.5V DV_{CC} = 3.0V to 5.5V, V_{SS} = AV_{SS5} = DV_{SS} = 0V)

Table 53. External Input Timing

Parameter	Symbol	Pin	Condition	Value		Unit	Used Pin Input Function
				Min	Max		
Input pulse width	t_{INH} t_{INL}	EIC0_INTk	—	200	-	ns	External Interrupt
		NMI					NMI
		Pi_jj		$2 * t_{CLK_PER} + t_{NF}$[14, 15]	-	ns	General purpose IO
		RLTn_TIN					Reload Timer
		PPG_ETRGx					PPG Trigger input
		ADCn_EDGI					AD Converter Trigger
		FRTn_FRCK					Free Running Timer external clock
		ICUn_INm					Input Capture
		UDCn_AIN, UDCn_BIN, UDCn_ZIN					Up/Down Counter

Notes
14. t_{CLK_PER} is the period of the corresponding peripheral clock.
15. t_{NF} is 200ns, if noise filter is enabled and 0ns, if noise filter is bypassed.

Figure 6. External Input Timing

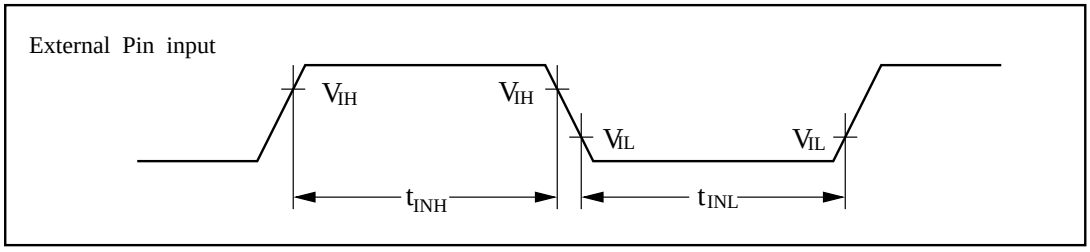

Slew Rate High Current Outputs

(T_A = -40°C to 105°C, V_{DD} = V_{DDA} = 1.1V to 1.3V, V_{DP3} = V_{DEA} = 3.0V to 3.6V, V_{DP5} = AV_{DD5} = V_{DE5} = 3.0V to 5.5V DV_{CC} = 3.0V to 5.5V, V_{SS} = AV_{SS5} = DV_{SS} = 0V)

Table 54. Slew Rate High Current Outputs

Parameter	Symbol	Pin	Condition	Value		Unit	Remarks
				Min	Max		
Output rise/fall time	t_{R30} t_{F30}	I/O circuit type SMC	Output driving strength set to “30mA”	15 @ C_{LOAD} = 0pF	-	ns	

Figure 7. Slew Rate High Current Output Timing

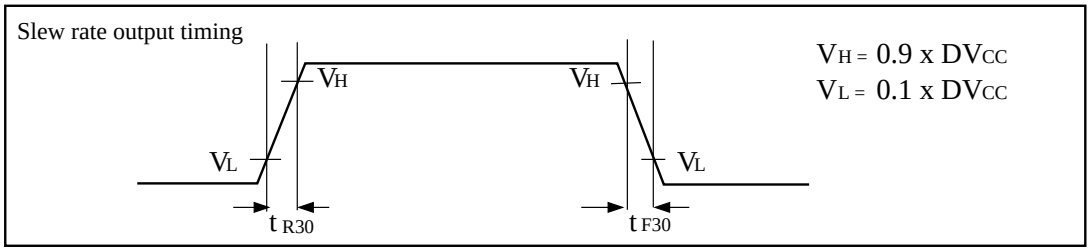

USART Timing

Note The values given below are for an I/O drive strength IOdrive = 5mA. If IOdrive is 2mA, all the maximum output timing described in the different tables must be increased by 10ns.

(T_A = -40°C to 105°C, V_{DD} = 1.1V to 1.3V, V_{DP3} = 3.0V to 3.6V, V_{DP5} = 3.0V to 5.5V, DV_{CC} = 3.0V to 5.5V, V_{SS} = 0V, IO_{drive} = 5mA, C_L = 50pF)

Table 55. USART Timing

Parameter	Symbol	Pin	Condition	V_{DP5} = 4.5V to 5.5V		V_{DP5} = 3.0V to 4.5V		Unit
				Min	Max	Min	Max	
Serial clock cycle time	t_{SCYCI}	SCK	Internal Shift Clock Mode	$4*t_{CLK_PERI0_PD2}$	-	$4*t_{CLK_PERI0_PD2}$	-	ns
SCK SOT delay time	t_{SLOVI}	SCK, SOT		-20	+20	-30	+30	ns
SOT SCK delay time	t_{OVSHI}	SCK, SOT		$N*t_{CLK_PERI0_PD2} - 20$ [16]	-	$N*t_{CLK_PERI0_PD2} - 30$[16]	-	ns
Valid SIN SCK	t_{IVSHI}	SCK, SIN		$t_{CLK_PERI0_PD2} + 45$	-	$t_{CLK_PERI0_PD2} + 55$	-	ns
SCK Valid SIN hold time	t_{SHIXI}	SCK, SIN		0	-	0	-	ns
Serial clock “L” pulse width	t_{SLBHE}	SCK	External Shift Clock Mode	$t_{CLK_PERI0_PD2} + 10$	-	$t_{CLK_PERI0_PD2} + 10$	-	ns
Serial clock “H” pulse width	t_{SHSLE}	SCK		$t_{CLK_PERI0_PD2} + 10$	-	$t_{CLK_PERI0_PD2} + 10$	-	ns
SCK SOT delay time	t_{SLOVE}	SCK, SOT		-	$2 * t_{CLK_DBG_PD2} + 45$	-	$2 * t_{CLK_DBG_PD2} + 45$	ns
Valid SIN SCK	t_{IVSHE}	SCK, SIN		$t_{CLK_PERI0_PD2}/2 + 10$	-	$t_{CLK_PERI0_PD2}/2 + 10$	-	ns
SCK Valid SIN hold time	t_{SHIXE}	SCK, SIN		$t_{CLK_PERI0_PD2} + 10$	-	$t_{CLK_PERI0_PD2} + 10$	-	ns
SCK fall time	t_{FE}	SCK		-	20	-	20	ns
SCK rise time	t_{RE}	SCK		-	20	-	20	ns

Notes

16. AC characteristic in CLK synchronized mode.
17. CL is the load capacity value of pins when testing.
18. Depending on the used machine clock frequency, the maximum possible baud rate can be limited by some parameters.
    $t_{CLK_PERI0_PD2}$ is the cycle time of the clock (CLK_PERI0_PD2), Unit: ns
19. Parameter N depends on t_{SCYCI} and can be calculated as follows:
    - if $t_{SCYCI} = 2*k*t_{CLK_PERI0_PD2}$, then N = k, where k is an integer > 2
    - if $t_{SCYCI} = (2*k+1)*t_{CLK_PERI0_PD2}$, then N = k+1, where k is an integer > 1.

Examples

t_{SCYCI}	N
$4 * t_{CLK_PERI0_PD2}$	2
$5 * t_{CLK_PERI0_PD2}$, $6 * t_{CLK_PERI0_PD2}$	3
$7 * t_{CLK_PERI0_PD2}$, $8 * t_{CLK_PERI0_PD2}$	4
….	….

Figure 8. USART Timing

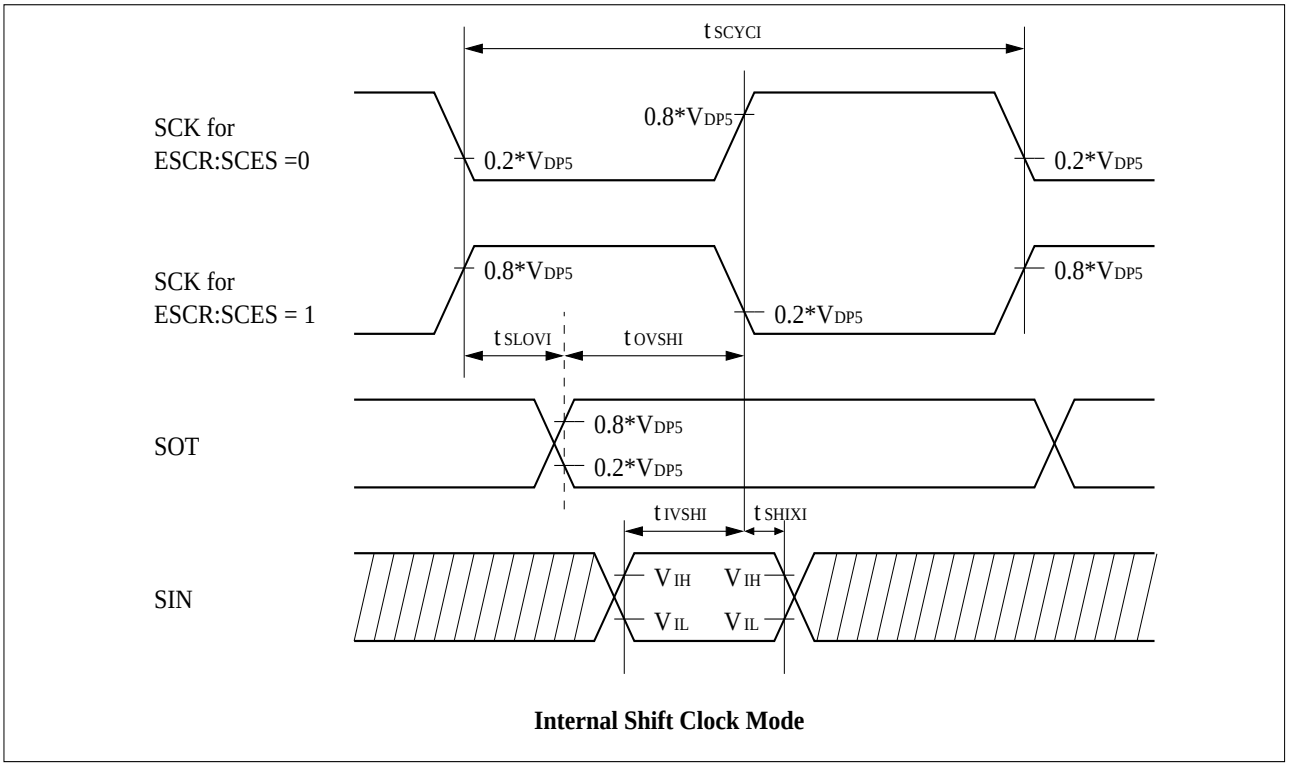

Internal Shift Clock Mode

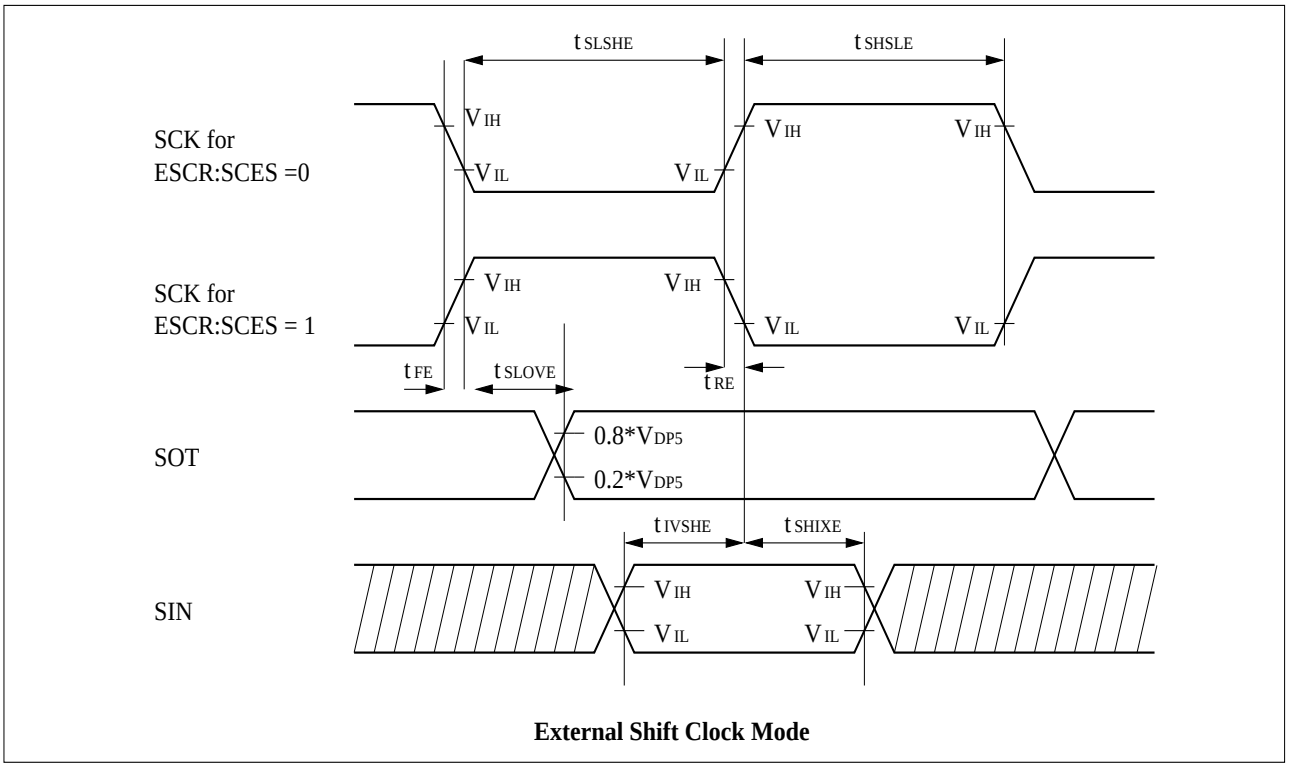

External Shift Clock Mode

I^2C Timing

(T_A = -40°C to 105°C, V_{DD} = V_{DDA} = 1.1V to 1.3V, V_{DP3} = V_{DEA} = 3.0V to 3.6V, V_{DP5} = AV_{DD5} = V_{DE5} = 4.5V to 5.5V[23] DV_{CC} = 4.5V to 5.5V, V_{SS} = AV_{SS5} = DV_{SS} = 0V)

Table 56. I^2C Timing

Parameter	Symbol	Standard-mode		Fast-mode		Unit
		Min	Max	Min	Max	
SCL clock frequency	f_{SCL}	0	100	0	400	kHz
Hold time (repeated) START condition SDA↓→SCL↓	t_{HDSTA}	4.0	-	0.6	-	µs
"L" width of the SCL clock	t_{LOW}	4.7	-	1.3	-	µs
"H" width of the SCL clock	t_{HIGH}	4.0	-	0.6	-	µs
Set-up time for a repeated START condition SCL↑→SDA↓	t_{SUSTA}	4.7	-	0.6	-	µs
Data hold time SCL↓→SDA↓↑	t_{HDDAT}	0	3.45	0	0.9	µs
Data set-up time SDA---↓→SCL↑¦¦-	t_{SUDAT}	250	-	100	-	ns
Set-up time for STOP condition SCL--↑ →SDA-↑	t_{SUSTO}	4	-	0.6	-	µs
Bus free time between a STOP and START condition	t_{BUS}	4.7	-	1.3	-	µs
Output fall time from 0.7 * V_{DP5} to 0.3 * V_{DP5} with a bus capacitance from 10pF to 400pF	t_{of}	20 + 0.1*C_b[21]	250	20 + 0.1*C_b[21]	250	ns
Capacitive load for each bus line	C_b	-	400	-	50	pF
Pulse width of spikes which will be suppressed by input noise filter	t_{SP}	n/a	n/a	0	1 * $t_{CLK_PERI0_PD2}$ * 3	ns

Notes
20.For use at over 100 kHz, set the CLK_PERI0_PD2 to at least 6 MHz.
21.C_b = capacitance of one bus line in pF.
22.$t_{CLK_PERI0_PD2}$ is the cycle time of the peripheral clock CLK_PERI0_PD2
23.I2C spec only guaranteed at VDP5 = 4.5V to 5.5V.

Figure 9. I2C Timing

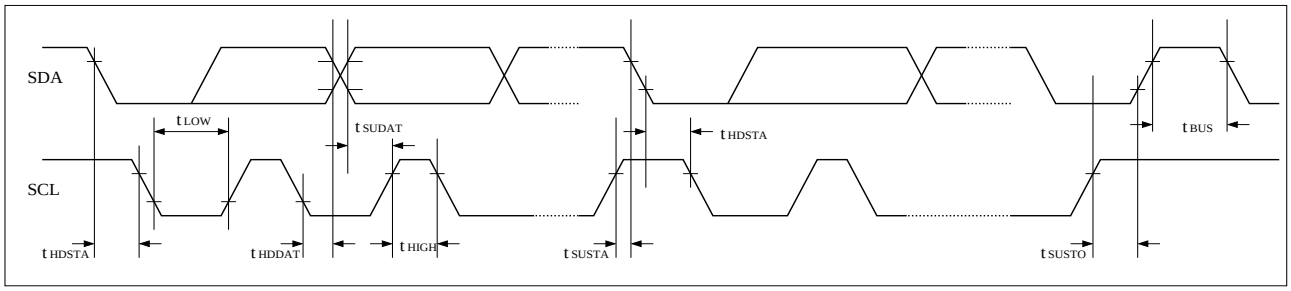

HSSPI Timing

(T_A = -40°C to 105°C, V_{DD} = V_{DDA} = 1.1V to 1.3V, V_{DP3} = V_{DEA} = 3.0V to 3.6V, V_{DP5} = AV_{DD5} = V_{DE5} = 3.0V to 5.5V, DV_{CC} = 3.0V to 5.5V, V_{SS} = AV_{SS5} = DV_{SS} = 0V)

Table 57. HSSPI Interface Timing (Master Mode)

Parameter	Symbol	Value			Units	Remarks
		Min	Typ	Max		
HSSPI clock frequency		-	-	64	MHz	–
Input setup time (HSSPIn_DATAi)	$T_{IS,DATA}$	13.4	-	-	ns	No clock retiming
		5.6	-	-	ns	With clock retiming
Input hold time (HSSPIn_DATAi)	$T_{IH,DATA}$	0	-	-	ns	No clock retiming
		1.5	-	-	ns	With clock retiming
Output delay time (HSSPIn_DATAo)	$T_{OD,DATA}$	-	-	3.8	ns	–
Output hold time (HSSPIn_DATAo)	$T_{OH,DATA}$	5	-	-	ns	–
Output delay time (HSSPIn_SSELo)	$T_{OD,SSEL}$	-	-	5.05	ns	–
Output hold time (HSSPIn_SSELo)	$T_{OH,SSEL}$	0	-	-	ns	–

Figure 10. HSSPI Interface Timing

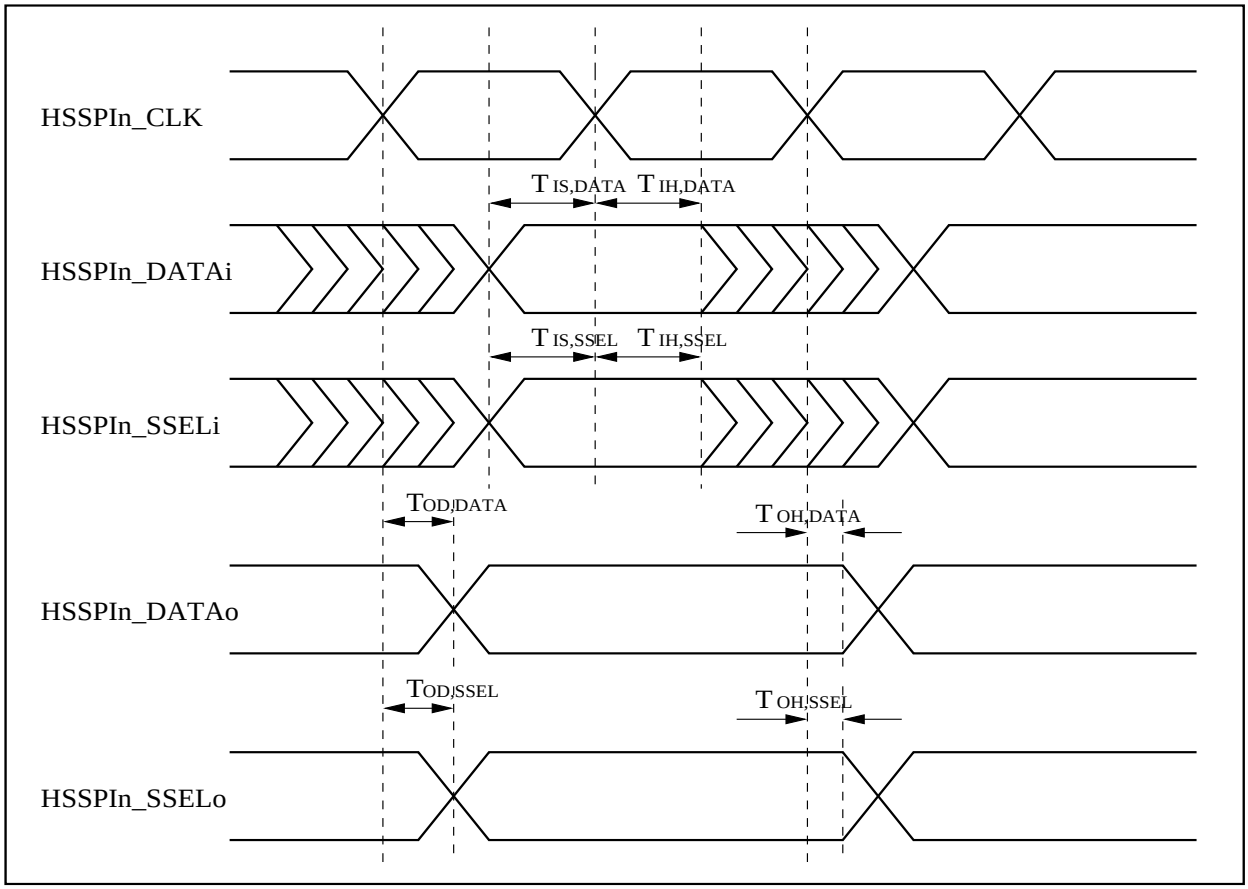

Table 58. HSSPI Interface Timing (Slave Mode)

Parameter	Symbol	Value			Units	Remarks
		Min	Typ	Max		
HSSPI clock frequency		-	-	25	MHz	—
Input setup time (HSSPIn_DATAi)	$T_{IS,DATA}$	5	-	-	ns	
Input hold time (HSSPIn_DATAi)	$T_{IH,DATA}$	0	-	-	ns	
Input setup time (HSSPIn_SSELi)	$T_{IS,SSEL}$	8.2	-	-	ns	
Input hold time (HSSPIn_SSELi)	$T_{IH,SSEL}$	2	-	-	ns	
Output delay time (HSSPIn_DATAo)	$T_{OD,DATA}$	-	-	15.5	ns	
Output hold time (HSSPIn_DATAo)	$T_{OH,DATA}$	0	-	-	ns	

SPI Timing

(T_A = -40°C to 105°C, V_{DD} = V_{DDA} = 1.1V to 1.3V, V_{DP3} = V_{DEA} = 3.0V to 3.6V, V_{DP5} = AV_{DD5} = V_{DE5} = 3.0V to 5.5V, DV_{CC} = 3.0V to 5.5V, V_{SS} = AV_{SS5} = DV_{SS} = 0V)

- For each SPI module, several combinations of I/O pins can be chosen for each SPI signal. The timing depends on the actual combination and is given below as separate values for each possible type of I/O-cell. When I/O/cells of different types are mixed, the worst case table, called “OVERALL SPI Interface timing” (see Table 59) must be used.
- In Master Mode, using the clock retiming function improves the setup and hold times for input data.
- The usable maximum clock frequency depends on the transmission mode (Master to Slave / Slave to Master, using clock-retiming or not). An example for calculation of maximum frequencies for communication of Master (retimed mode) and Slave for the following IO cell types BIDI33/BIDI50/SMC is provided in Table 60, Table 61, and Table 62.

Table 59. OVERALL SPI Interface Timing

Parameter	Symbol	Master Mode, non-retimed clock		Master Mode, retimed clock		Slave Mode		Unit
		Min	Max	Min	Max	Min	Max	
Input setup time (SPIn_DATAi)	$T_{IS,DATA}$	23.9	-	8.0	-	7.9	-	ns
Input hold time (SPIn_DATAi)	$T_{IH,DATA}$	-4.3 [24]	-	5.4	-	5.3	-	ns
Output delay time (SPIn_DATAo)	$T_{OD,DATA}$	-	8.9	-	8.9	-	26.9	ns
Output hold time (SPIn_DATAo)	$T_{OH,DATA}$	-5.7 [24]	-	-5.7 [24]	-	4.0	-	ns
Input setup time (SPIn_SSELi)	$T_{IS,SSEL}$	-	-	-	-	8.4	-	ns
Input hold time (SPIn_SSELi)	$T_{IH,SSEL}$	-	-	-	-	4.9	-	ns
Output delay time (SPIn_SSELo)	$T_{OD,SSEL}$	-	8.0	-	8.0	-	-	ns
Output hold time (SPIn_SSELo)	$T_{OH,SSEL}$	-5.7 [24]	-	-5.7 [24]	-	-	-	ns
Example for calculation of max. frequencies for communication of Master (retimed mode) and Slave:								
Transmission		**Half Period Time**				**Max. Frequency**		**Unit**
From Master to Slave		$T/2 = T_{OD,DATA}$ (Master) + $T_{IS,DATA}$ (Slave)				29.7		MHz
From Slave to Master		$T/2 = T_{OD,DATA}$ (Slave) + $T_{IS,DATA}$ (Master)				14.3		MHz

Note
24. A negative hold time implies that the clock edge output is delayed with respect to data output. In any case, an external device that will receive data, must use a sampling point that is outside the time interval given by Output hold time and Output delay time.

Table 60. SPI Interface Timing for all Cells of Type BIDI33

Parameter	Symbol	Master Mode, non-retimed clock		Master Mode, retimed clock		Slave Mode		Unit
		Min	Max	Min	Max	Min	Max	
Input setup time (SPIn_DATAi)	$T_{IS,DATA}$	16.5	-	4.8	-	4.2	-	ns
Input hold time (SPIn_DATAi)	$T_{IH,DATA}$	-4.3 [25]	-	1.3	-	0.9	-	ns
Output delay time (SPIn_DATAo)	$T_{OD,DATA}$	-	7.7	-	7.7	-	21.4	ns
Output hold time (SPIn_DATAo)	$T_{OH,DATA}$	-2.1 [25]	-	-2.1 [25]	-	4.0	-	ns
Input setup time (SPIn_SSELi)	$T_{IS,SSEL}$	-	-	-	-	4.4	-	ns
Input hold time (SPIn_SSELi)	$T_{IH,SSEL}$	-	-	-	-	0.7	-	ns
Output delay time (SPIn_SSELo)	$T_{OD,SSEL}$	-	4.0	-	4.0	-	-	ns
Output hold time (SPIn_SSELo)	$T_{OH,SSEL}$	1.2	-	1.2	-	-	-	ns
Example for calculation of max. frequencies for communication of Master (retimed mode) and Slave:								
Transmission		**Half Period Time**				**Max. Frequency**		**Unit**
From Master to Slave		$T/2 = T_{OD,DATA}$ (Master) + $T_{IS,DATA}$ (Slave)				42		MHz
From Slave to Master		$T/2 = T_{OD,DATA}$ (Slave) + $T_{IS,DATA}$ (Master)				19		MHz

Note
25. A negative hold time implies that the clock edge output is delayed with respect to data output. In any case, an external device that will receive data, must use a sampling point that is outside the time interval given by Output hold time and Output delay time.

Table 61. SPI Interface timing for all cells of type BIDI50

Parameter	Symbol	Master Mode, non-retimed clock		Master Mode, retimed clock		Slave Mode		Unit
		Min	Max	Min	Max	Min	Max	
Input setup time (SPIn_DATAi)	$T_{IS,DATA}$	23.9	-	5.8	-	5.7	-	ns
Input hold time (SPIn_DATAi)	$T_{IH,DATA}$	-6.4 [26]	-	3.2	-	3.1	-	ns
Output delay time (SPIn_DATAo)	$T_{OD,DATA}$	-	7.2	-	7.2	-	25.8	ns
Output hold time (SPIn_DATAo)	$T_{OH,DATA}$	-2.5 [26]	-	-2.5 [26]	-	6.6	-	ns
Input setup time (SPIn_SSELi)	$T_{IS,SSEL}$	-	-	-	-	6.5	-	ns
Input hold time (SPIn_SSELi)	$T_{IH,SSEL}$	-	-	-	-	2.5	-	ns
Output delay time (SPIn_SSELo)	$T_{OD,SSEL}$	-	6.2	-	6.2	-	-	ns
Output hold time (SPIn_SSELo)	$T_{OH,SSEL}$	0.9	-	0.9	-	-	-	ns
Example for calculation of max. frequencies for communication of Master (retimed mode) and Slave:								
Transmission		**Half Period Time**				**Max. Frequency**		**Unit**
From Master to Slave		$T/2 = T_{OD,DATA}$ (Master) + $T_{IS,DATA}$ (Slave)				38.7		MHz
From Slave to Master		$T/2 = T_{OD,DATA}$ (Slave) + $T_{IS,DATA}$ (Master)				15.8		MHz

Note
26. A negative hold time implies that the clock edge output is delayed with respect to data output. In any case, an external device that will receive data, must use a sampling point that is outside the time interval given by Output hold time and Output delay time.

Table 62. SPI Interface Timing for all Cells of Type SMC

Parameter	Symbol	Master Mode, non-retimed Clock		Master Mode, retimed Clock		Slave Mode		Unit
		Min	Max	Min	Max	Min	Max	
Input setup time (SPIn_DATAi)	$T_{IS,DATA}$	21.2	-	4.7	-	4.6	-	ns
Input hold time (SPIn_DATAi)	$T_{IH,DATA}$	-6.1 [27]	-	3.2	-	3.1	-	ns
Output delay time (SPIn_DATAo)	$T_{OD,DATA}$	-	6.1	-	6.1	-	26.1	ns
Output hold time (SPIn_DATAo)	$T_{OH,DATA}$	-0.7 [27]	-	-0.7 [27]	-	6.5	-	ns
Input setup time (SPIn_SSELi)	$T_{IS,SSEL}$	-	-	-	-	5.5	-	ns
Input hold time (SPIn_SSELi)	$T_{IH,SSEL}$	-	-	-	-	1.5	-	ns
Output delay time (SPIn_SSELo)	$T_{OD,SSEL}$	-	4.6	-	4.6	-	-	ns
Output hold time (SPIn_SSELo)	$T_{OH,SSEL}$	1.8	-	1.8	-	-	-	ns
Example for calculation of max. frequencies for communication of Master (retimed mode) and Slave:								
Transmission		**Half Period Time**				**Max. Frequency**		**Unit**
From Master to Slave		T/2 = $T_{OD,DATA}$ (Master) + $T_{IS,DATA}$ (Slave)				46.7		MHz
From Slave to Master		T/2 = $T_{OD,DATA}$ (Slave) + $T_{IS,DATA}$ (Master)				16.2		MHz

Note

27. A negative hold time implies that the clock edge output is delayed with respect to data output. In any case, an external device that will receive data, must use a sampling point that is outside the time interval given by Output hold time and Output delay time.

Figure 11. SPI Interface Timing

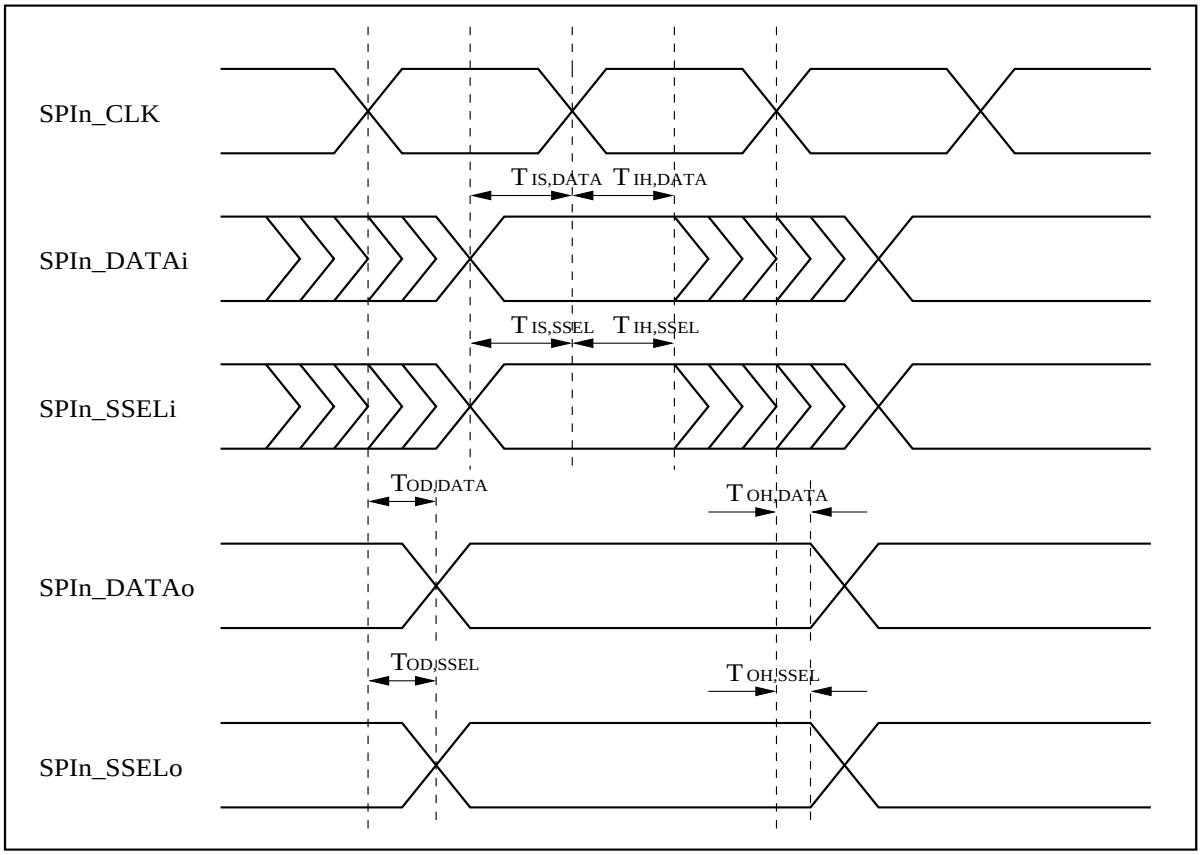

External Bus Interface Timing

(T_A = -40°C to 105°C, V_{DD} = V_{DDA} = 1.1V to 1.3V, V_{DP3} = V_{DEA} = 3.0V to 3.6V, V_{DP5} = AV_{DD5} = V_{DE5} = 4.5V to 5.5V
DV_{CC} = 4.5V to 5.5V, V_{SS} = AV_{SS5} = DV_{SS} = 0V, C_{Load} = 20 pF)

■ **General Timing**

Table 63. General Timing Parameters

Parameter	Symbol	Pin Names	Value		Unit	Note
			Min	Max		
MCSX0~MCSX7	T_{cso}	EBI0_MCLK, EBI0_MCSX0 ~ EBI0_MCSX7	–	7	ns	–
Address delay time	T_{ao}	EBI0_MCLK, EBI0_MAD[23:0]	–	11	ns	–
Data output delay time	T_{do}	EBI0_MCLK, EBI0_MDATA[31:0]	–	9	ns	–
Data output HiZ time	T_{doz}	EBI0_MCLK, EBI0_MDATA[31:0]	–	10	ns	–

■ **SRAM Read Timing**

Table 64. SRAM Read Timing Parameters

Parameter	Symbol	Pin names	Value		Unit	Note
			Min	Max		
SRAM data setup time	T_{dsr}	EBI0_MOEX, EBI0_MDATA[31:0]	15	–	ns	–
SRAM data hold time	T_{dhr}	EBI0_MOEX, EBI0_MDATA[31:0]	0	–	ns	–
MOEX delay time	T_{rdo}	EBI0_MCLK, EBI0_MOEX	–	8	ns	–

Figure 12. SRAM Read Timing

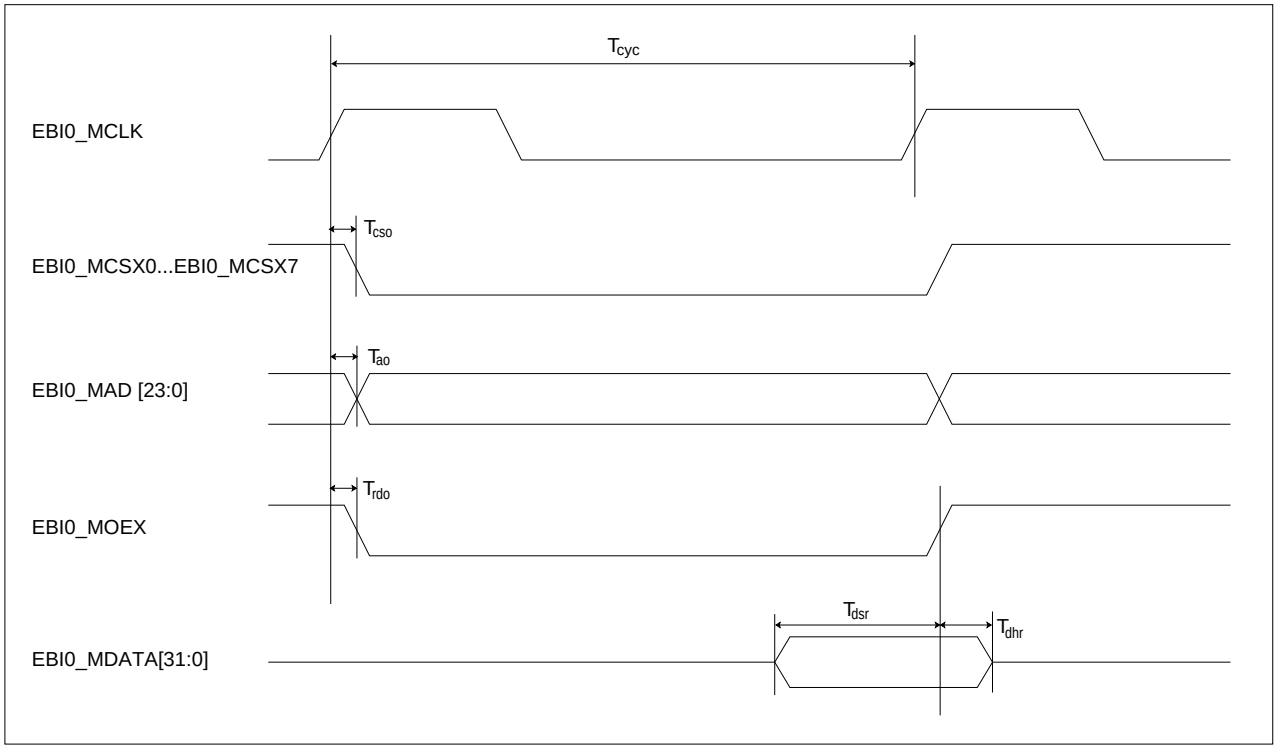

■ SRAM Write Timing

Table 65. SRAM Write Timing Parameters

Parameter	Symbol	Pin names	Value		Unit	Note
			Min	Max		
SRAM WE delay time	T_{weo}	EBI0_MCLK, EBI0_MWEX	–	7	ns	–
MDQM[3:0] delay time	T_{wro}	EBI0_MCLK, EBI0_MDQM[3:0]	–	7	ns	–

Table 66. SRAM Write Timing

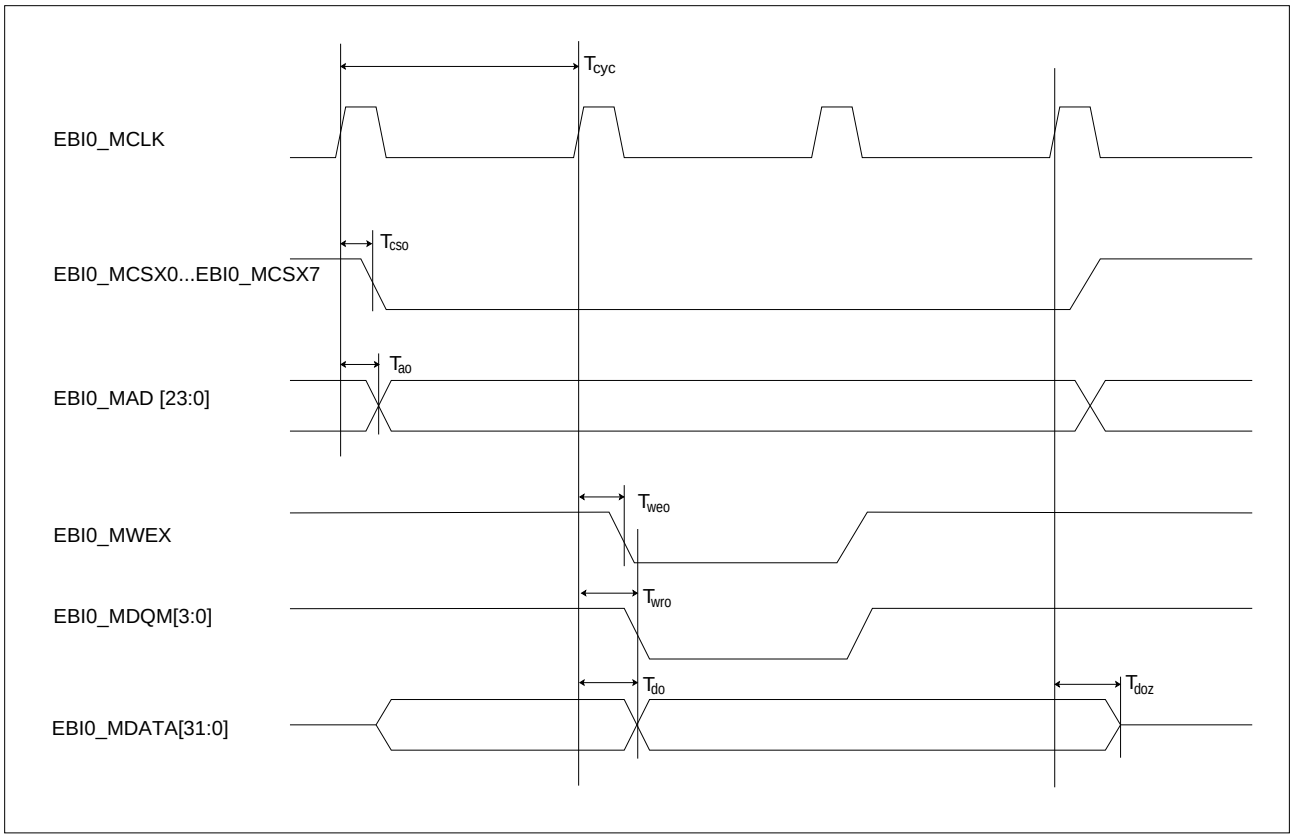

■ SDRAM Access Timing

Table 67. SDRAM Access Timing Parameters

Parameter	Symbol	Pin names	Value		Unit	Note
			Min	Max		
SDRAM CS delay time	T_{mcs}	EBI0_MCLK, EBI0_MCSX0	–	7	ns	–
SDRAM RAS delay time	T_{ras}	EBI0_MCLK, EBI0_MRASX	–	6	ns	–
SDRAM CAS delay time	T_{cas}	EBI0_MCLK, EBI0_MCASX	–	6.5	ns	–
SDRAM WE delay time	T_{mwe}	EBI0_MCLK, EBI0_MDWEX	–	7	ns	–
SDRAM CKE delay time	T_{cke}	EBI0_MCLK, EBI0_MCKE	–	7.5	ns	–
SDRAM data setup time	T_{dssd}	EBI0_MCLK, EBI0_MDATA[31:0]	8.5	–	ns	–
SDRAM data hold time	T_{dhsd}	EBI0_MCLK, EBI0_MDATA[31:0]	0	–	ns	–

Figure 13. SDRAM Access Timing

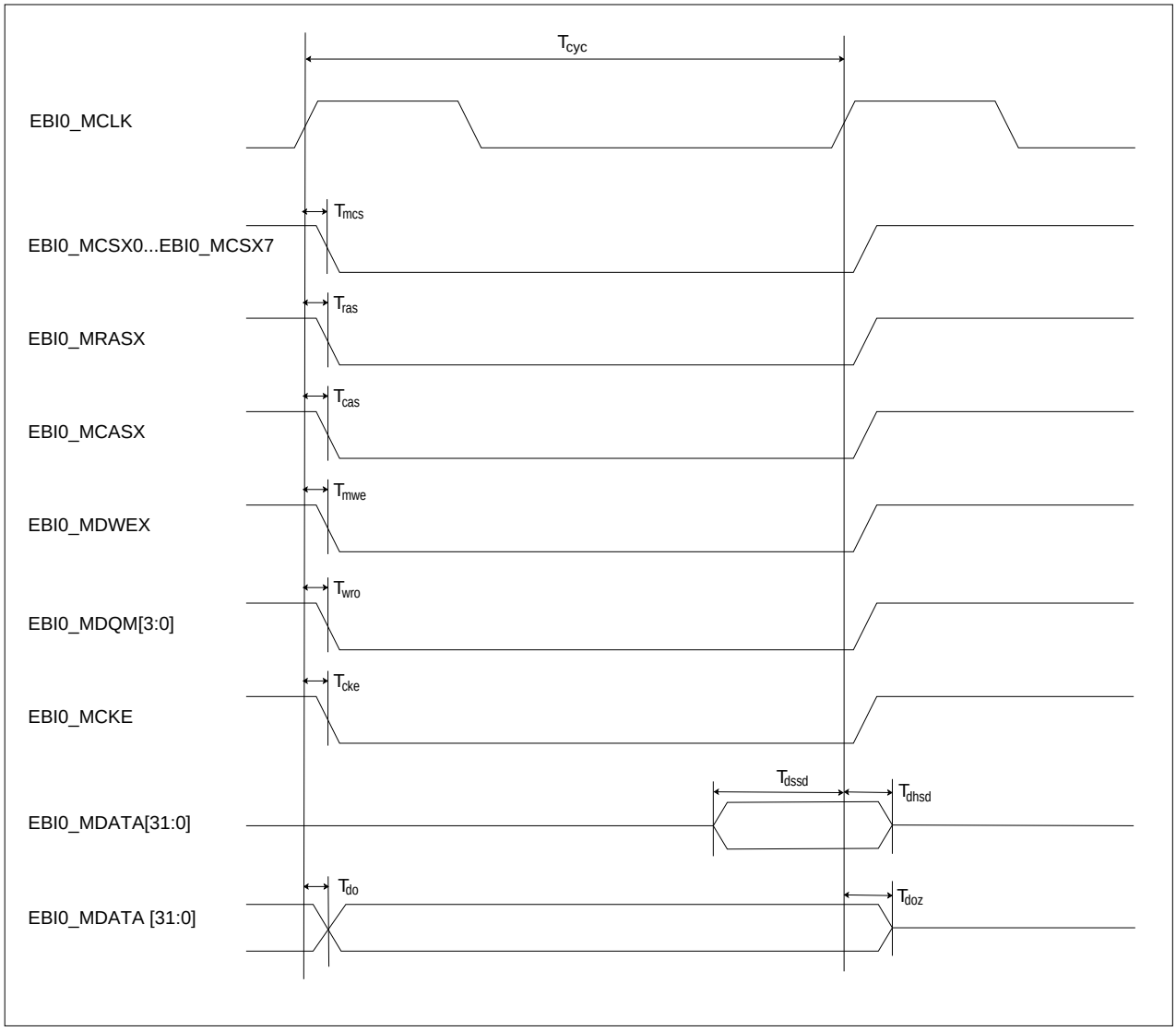

■ NAND Flash Read Timing

Table 68. NAND Flash Read Timing Parameters

Parameter	Symbol	Pin names	Value		Unit	Note
			Min	Max		
NAND Read Enable delay time	T_{reno}	EBI0_MCLK, EBI0_MNREX	–	7.5	ns	–
NAND data setup time	T_{dsn}	EBI0_MCLK, EBI0_MDATA[31:0]	14.5	–	ns	–
NAND data hold time	T_{dhn}	EBI0_MCLK, EBI0_MDATA[31:0]	0	–	ns	–

Figure 14. NAND Flash Read Timing

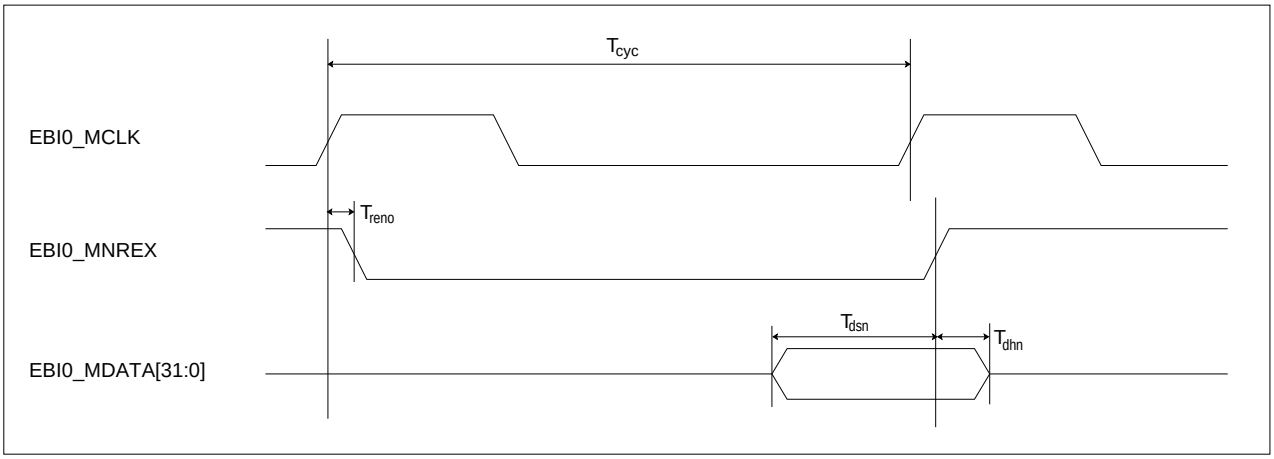

■ NAND Flash Write Timing

Table 69. NAND Flash Write Timing Parameters

Parameter	Symbol	Pin names	Value		Unit	Note
			Min	Max		
NAND Address Latch Enable delay time	T_{aleo}	EBI0_MCLK, EBI0_MNALE	–	6	ns	–
NAND Command Latch Enable delay time	T_{cleo}	EBI0_MCLK, EBI0_MNCLE	–	4.5	ns	–
NAND Write Enable delay time	T_{weno}	EBI0_MCLK, EBI0_MNWEX	–	6.5	ns	–

Figure 15. NAND Flash Write Timing

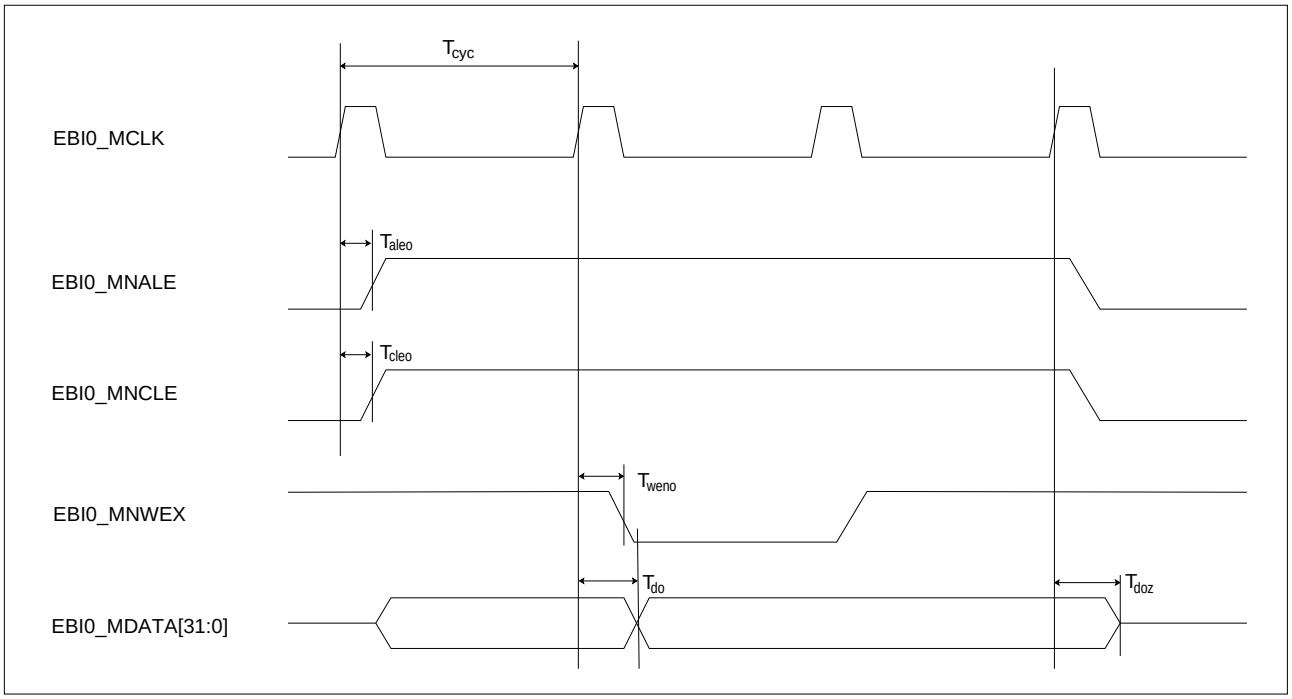

Analog Digital Converter

(T_A = -40°C to 105°C, 3.0V -≤ AV_{RH5}, V_{DD} = V_{DDA} = 1.1V to 1.3V, V_{DP3} = V_{DEA} = 3.0V to 3.6V, V_{DP5} = AV_{DD5} = V_{DE5} = 3.0V to 5.5V, DV_{CC} = 3.0V to 5.5V, V_{SS} = AV_{SS5} = DV_{SS} = 0V)

Table 70. Analog Digital Converter

Parameter	Symbol	Pin	Value			Unit	Remarks
			Min	Typ	Max		
Resolution	-	-	-	-	10	bit	–
Total error	-	-	-3	-	+3	LSB	–
Nonlinearity error	-	-	-2.5	-	+2.5	LSB	–
Differential nonlinearity error	-	-	-1.9	-	+1.9	LSB	–
Full scale transition voltage	V_{FST}	ANi	Typ - 20	AV_{RH5} - 1.5 LSB	Typ + 20	mV	between 1022 and 1023
Zero Transition Voltage	V_{ZT}	ANi	Typ - 20	AV_{SS5} + 0.5 LSB	Typ + 20	mV	between 0 and 1
Conversion Rate	T_S	pi_jj(ANIN)	353	-	1186	KS/s	–
Comparison Time	T_{COMP}	-	646.8	-	-	ns	Fclk=17MHz, Tclk=58.8ns * 11 clocks
			-	-	2750	ns	AVDD5 = 4.5V...5.5V, Fclk = 4MHz, Tclk = 250ns * 11 clocks
			-	-	1837	ns	AVDD5 = 3.0V...4.5V, Fclk = 6MHz, Tclk = 167ns * 11 clocks
Analog input leakage current (during conversion)	I_{AIN}	ANn	-1	-	+1	µA	T_A = 25°C, AV_{SS5} < V_I < AV_{DD5}, AV_{RH5}
			-3	-	+3	µA	T_A ≤ 105°C, AV_{SS5} < V_I < AV_{DD5}, AV_{RH5}
Analog input voltage range	V_{AIN}	ANn	AV_{SS5}	-	AV_{RH5}	V	–
Reference voltage range	AV_{RH5}	AV_{RH5}	AV_{DD5} - 0.5	-	AV_{DD5}	V	–
Power supply current	I_A	AV_{DD5}	-	2	3.4	mA	A/D Converter active
	I_{AH}	AV_{DD5}	-	-	6	µA	25°C, A/D Converter not operated
			-	-	11	µA	105°C, A/D Converter not operated
Reference voltage current	I_R	AV_{RH5}	-	0.6	1	mA	A/D Converter active
	I_{RH}	AV_{RH5}	-	-	0.6	µA	A/D Converter not operated
Offset between input channels	-	ANn	-	-	4	LSB	–

Note
28. The accuracy gets worse as |AV_{RH5} | becomes smaller.

Minimum Sampling Time

The minimum sampling time can be calculated from the following formula:

For pins ADC0_AN0..25:

$T_{samp} = 7.63 \times [R_{ext} \times (C_{ext} + C_{IN}) + (R_{ext} + R_{ADC}) \times C_{ADC}]$

For Pins ADC0_AN26..31:

$T_{samp} = 7.63 \times [R_{ext} \times (C_{ext} + C_{IN}) + (R_{ext} + R_{ADC1}) \times C_{ADC1} + (R_{ext} + R_{ADC1} + R_{ADC}) \times C_{ADC}]$

See the Hardware Manual for an explanation and the reference model for above formulas. The following values are reference values for calculation.

Table 71. Reference values for A/D Converter Sampling Time Calculation[29]

Symbol	Explanation	Condition	Value	Unit
R_{ext}	External driving impedance		-	-
C_{ext}	Capacitance of PCB at A/D Converter input		-	-
C_{IN}	Capacitance of the MCU input pin		16	pF
R_{ADC}	Resitances within MCU for ADC and internal nets	$4.5V \le AV_{DD5} \le 5.5V$	2.4	kΩ
		$3.0V \le AV_{DD5} < 4.5V$	4.9	kΩ
R_{ADC1}	Resitances within MCU for analog switch and internal nets	$4.5V \le AV_{DD5} \le 5.5V$	1.8	kΩ
		$3.0V \le AV_{DD5} < 4.5V$	4.3	kΩ
C_{ADC}	Sampling Capacitance of ADC and internal nets		18	pF
C_{ADC1}	Capacitance within MCU for analog switch and internal nets		3	pF

Note

29. The values given in this table are intended as reference values for calculation of the sampling time for A/D Converter. These values are not guaranteed.

Definition of A/D Converter Terms

- Resolution: Analog variation that is recognized by an A/D converter.
- Total error: Difference between the actual value and the ideal value. The total error includes zero transition error, full-scale transition error and nonlinearity error.
- Deviation between a line across zero-transition line (00 0000 0000 <--> 00 0000 0001) and full-scale transition line (11 1111 1110 <--> 11 1111 1111) and actual conversion characteristics.
- Differential linearity error: Deviation of input voltage, which is required for changing output code by 1 LSB, from an ideal value.
- Zero reading voltage: Input voltage which results in the minimum conversion value.
- Full scale reading voltage: Input voltage which results in the maximum conversion value.

Figure 16. Total Error of Digital Output

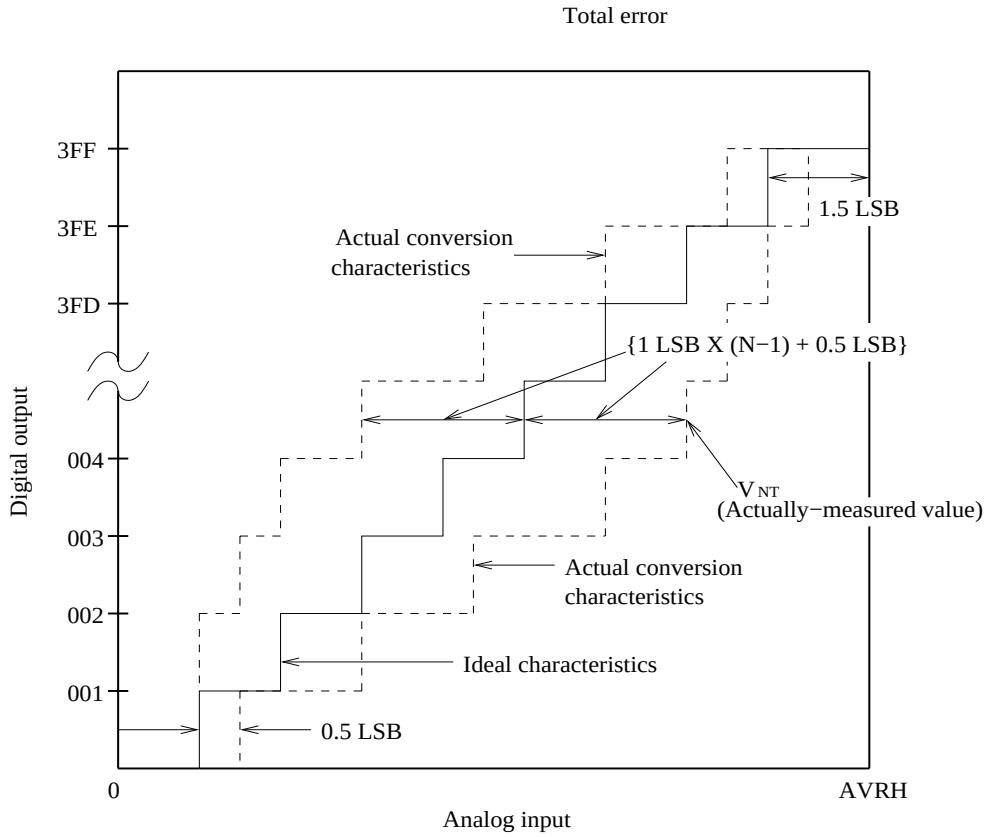

$$\text{Total error of digital output "N"} = \frac{V_{NT} - \{1\ \text{LSB} \times (N-1) + 0.5\ \text{LSB}\}}{1\ \text{LSB}}\ [\text{LSB}]$$

$$1\ \text{LSB} = (\text{Ideal value})\ \frac{\text{AVRH}}{1024}\ [\text{V}]$$

N : A/D converter digital output value

V_{OT} (Ideal value) = 0 + 0.5 LSB [V]

V_{FST} (Ideal value) = AVRH − 1.5LB [V]

V_{NT} : A voltage at which digital output transition from (N−1) to N.

FLASH Memory Program/Erase Characteristics for TCFLASH and EEFLASH

(T_A = -40°C to 105°C, V_{DD} = V_{DDA} = 1.1V to 1.3V, V_{DP3} = V_{DEA} = 3.0V to 3.6V, V_{DP5} = AV_{DD5} = V_{DE5} = 3.0V to 5.5V, DV_{CC} = 3.0V to 5.5V, V_{SS} = AV_{SS5} = DV_{SS} = 0V)

Table 72. Program/Erase Time

Parameter		Value			Unit	Remarks
		Min	Typ[30]	Max		
Sector Erase Time	Small Sector	-	0.3	1.1	s	The internal programming time before the erase procedure starts is included.
	Large Sector	-	0.7	3.7	s	
Macro Erase Time	TCFLASH	-	13.6	68	s	
	EEFLASH	-	2.4	8.8	s	
Word Programming Time		-	12	384	µs	

Note
30. Typical definition: T_A=25°C / V_{DD}=1.2V / Program/Erase cycle = Immediately after shipment.

Table 73. Program/Erase Cycle and Data Retention Time[31]

Program/Erase cycle at each sector		Data Retention time	
Min Value	Unit	Min Value	Unit
1000	cycles	20	years
10000	cycles	10	years
100000	cycles	5	years

Note
31. These values were converted from the technology qualification using Arrhenius equation to translate high temperature measurements into normalized values at +85°C.

Table 74. Execution Time Limit

Parameter		Value	Unit
Program Execution Time limit[32]		**1.3**	**ms**
Macro Erase Execution Time limit	TCFLASH	187.2	s
	EEFLASH	63	s
Sector Erase Execution Time limit[33]		7.8	s

Note
32. This is the time it takes for the macro to detect a Hang up 1 error when 1 is to be programmed to a memory cell whose memory value is either 0 or X.
33. See the Hardware Manual for an explanation about Flash Timing Limit Exceeded Flags. The time during Sector Erase Suspend (period from Suspend Command Write Cycle to Resume Command Write Cycle) is not included.

RC Oscillator Frequency

This chapter provides reference values for the RC Configuration Register (SYSC_RCCFGR) settings. The corresponding oscillator is commonly referred to as the “12 MHz RC Oscillator”, because its typical frequency at the central setting is about 12 MHz, with the SYSC_RCCFGR:SFREQ bit set to “1”.

When the SYSC_RCCFGR:SFREQ bit is set to “0”, the central setting corresponds to about 8 MHz.

The default value of SYSC_RCCFGR:SFREQ is “1” and the default value of SYSC_RCCFGR:TRM[7:0] is “0xFF”, so the default frequency setting is 16.9 MHz (typical value).

Figure 17. RC Oscillator Frequency at SYSC_RCCFGR:SFREQ = 0

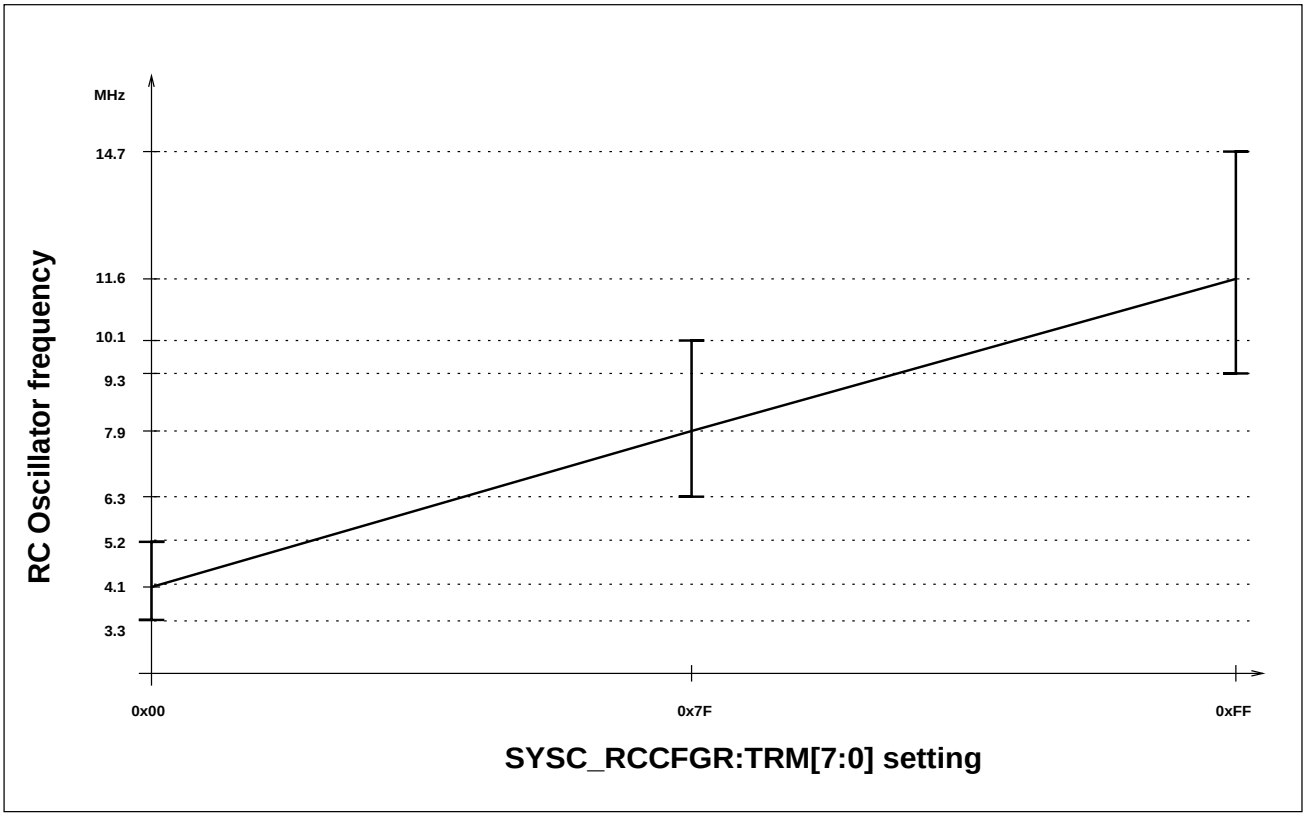

Note
34. The provided function values are not guaranteed and can serve for reference, only. Guaranteed values are listed in Table 50 on page 247.

Figure 18. RC Oscillator Frequency at SYSC_RCCFGR:SFREQ = 1

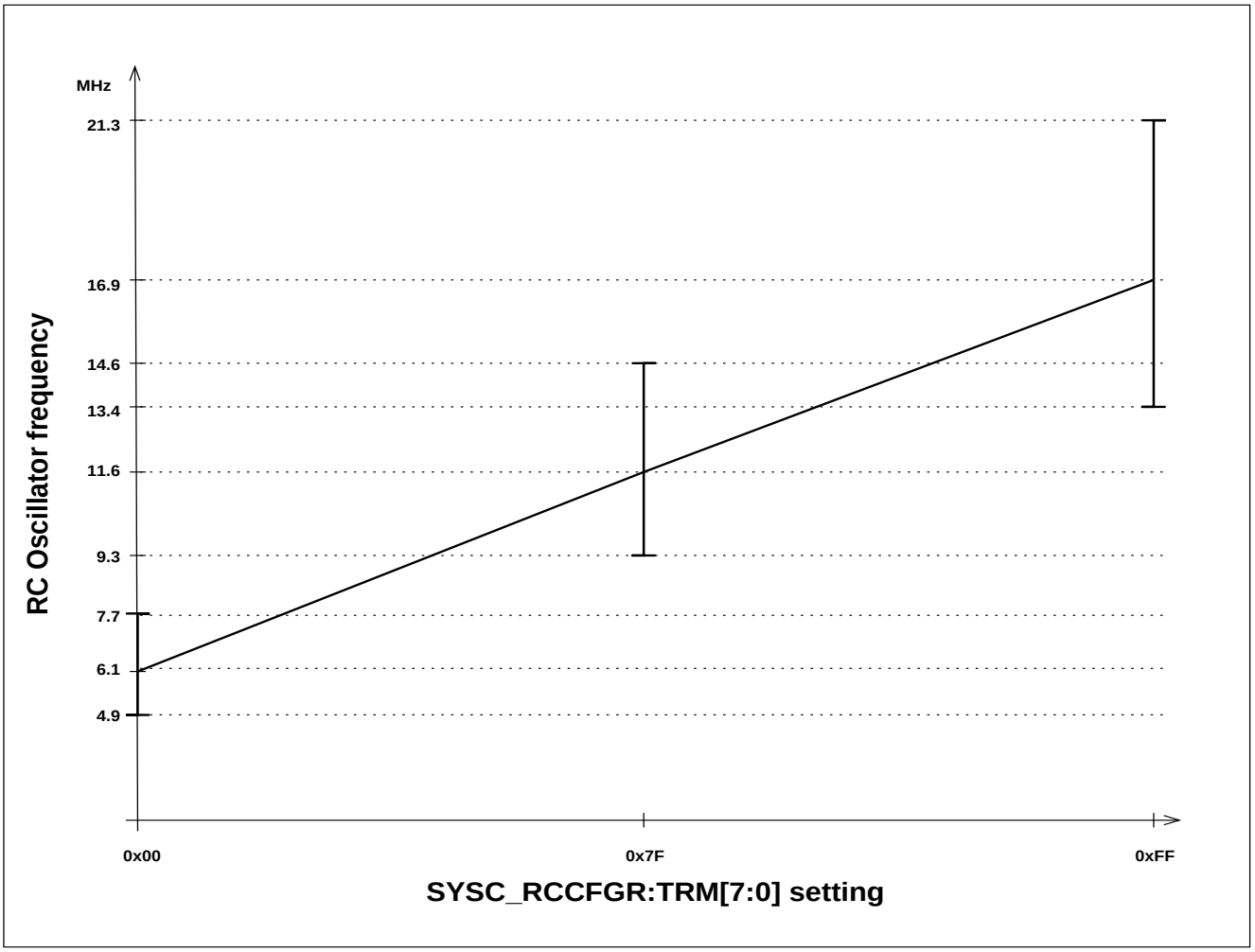

Note
35. The provided function values are not guaranteed and can serve for reference, only. Guaranteed values are listed in Table 50 on page 247.

ESD Structure between Power Domains

There are ESD diodes between VDD, VDP3, and VSS to protect VDD against ESD overvoltage.

Figure 19. ESD Diodes between VDP3, VDD, and VSS

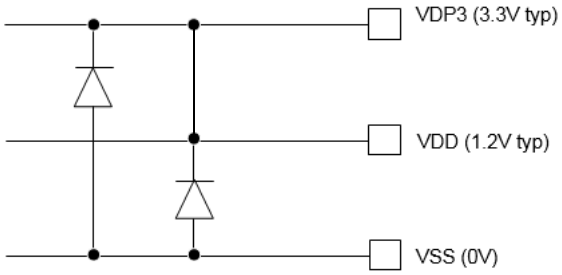

Note The diode between VDP3 and VDD is removed for CY9DF126C.

There are ESD diodes between VDD, VDP5, and VSS to protect VDD against ESD overvoltage.

Figure 20. ESD Diodes between VDP5, VDD, and VSS

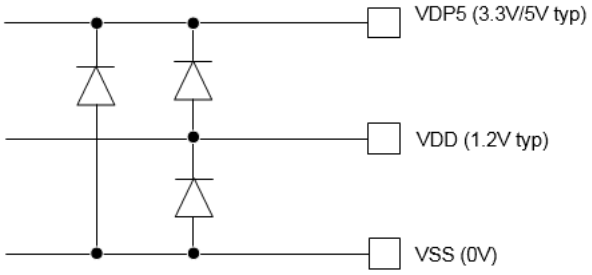

There are ESD diodes between AVSS5, VDP5, and VSS to protect AVSS5 and VSS against ESD overvoltage.

Figure 21. ESD Diodes between VDP5, AVSS5, and VSS

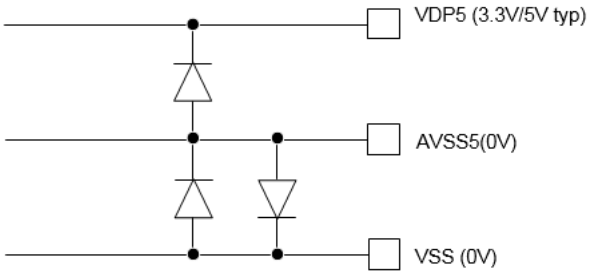

There are ESD diodes between AVDD5 and AVSS5 to protect AVDD5 and AVSS5 against ESD overvoltage.

Figure 22. ESD Diodes between AVDD5 and AVSS5

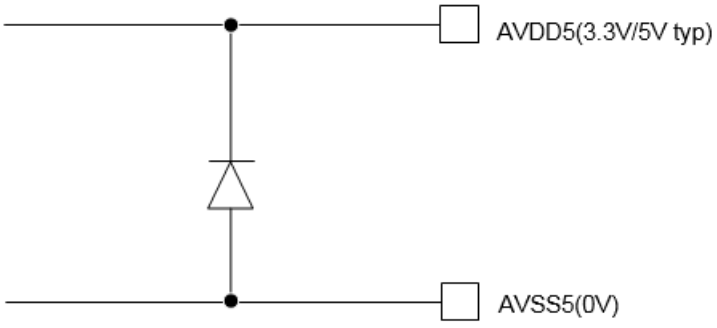

There are ESD diodes between DVSS, DVCC (SMC supply), and VSS to protect DVSS and VSS against ESD overvoltage.

Figure 23. ESD Diodes between DVCC, DVSS, and VSS

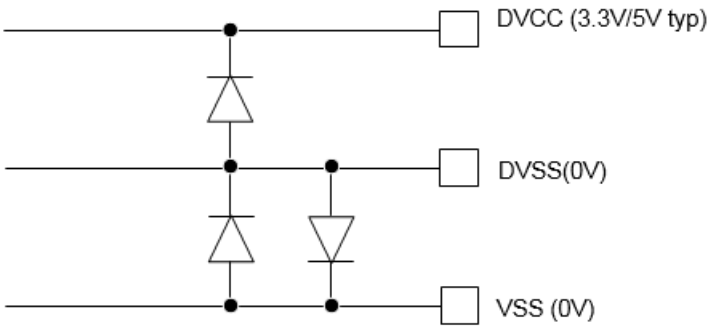

There are ESD diodes between VDP5, AVDD5 and VSS to protect AVDD5 against ESD overvoltage.

Figure 24. ESD Diodes between VDP5, AVDD5, and VSS

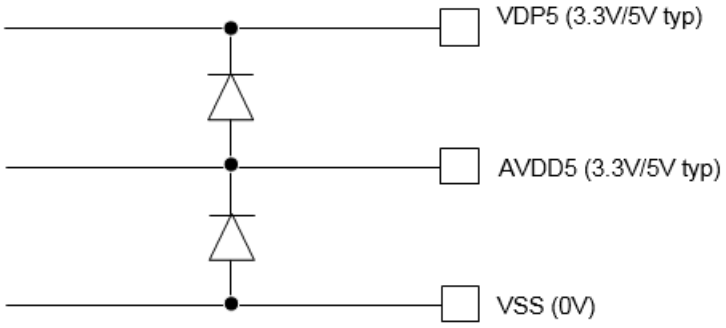

Procedures

Boundary scan

- Boundary scan is supported using standard IEEE 1149.1 JTAG interface. A 5-pin JTAG connection is available on QFP-176. Instruction register supported is 6-bits wide, and the standard instructions listed in Table 75 are supported. Any other value of instruction register is reserved, and should not be entered. Entering reserved values can result in indeterminate operation.
- Boundary scan mode may be entered by setting pins MODE = “1” and MD[0] = “0”.

Table 75. Boundary Scan

Instruction Code (in binary)	Instruction	Accessible Data Register	Remarks
‘000000’	EXTEST	Boundary scan chain	–
‘000001’	SAMPLE	Boundary scan chain	–
‘000010’	PRELOAD	Boundary scan chain	–
‘000011’	IDCODE	Device ID code register	For CY9DF126, IDCODE is 32-bits long, and is 0x0F147009
‘000100’	USERCODE	Device user code register	For CY9DF126, USERCODE is 32-bits long, and is 0xC4AA140B
‘000101’	HIGHZ	Boundary scan chain	–
‘000110’	CLAMP	Boundary scan chain	–
‘010001’	IO_CNTRL	IO Control register	Command must be followed by 16-bit data value: 0x04pp, where: pp is a pin control setting from Table 76.
‘111111’	BYPASS	Bypass register	–

Table 76. IO Control (IO_CNTRL) Register

IO_CNTRL															
• 15	• 14	• 13	• 12	• 11	• 10	• 9	• 8	• 7	• 6	• 5	• 4	• 3	• 2	• 1	• 0
• reserved	• reserved	• reserved	• reserved	• reserved	• SEL	• I2C	• reserved	• reserved	• reserved	• DCPDN	• DCPUP	• OUTDR[1]	• OUTDR[0]	• PITILS[1]	• PITILS[0]
• R0W0	• R0W0	• R0W0	• R0W0	• R0W0	• RW	• RW	• R0W0	• R0W0	• R0W0	• RW	• RW	• RW	• RW	• RW	• RW
• 0	• 0	• 0	• 0	• 0	• 0	• 0	• 0	• 0	• 0	• 0	• 0	• 0	• 0	• 0	• 0

Table 77. IO Control (IO_CNTRL) Register Bits

Bit Position	Bit Field Name	Bit Description
[15:11]	reserved	Reserved. Always write 0 to these bits.
[10]	SEL	Selection of DCPDN, DCPUP, OUTDR and PITILS “0”: IO_CNTRL[5:0] are disabled. Input buffers are disabled. “1”: IO_CNTRL[5:0] will control IO pads
[9]	I2C	Extends IO_CNTRL[3:2], but for I2C IO cell only (see below) “0”: set I2C cell to value selected by IO_CNTRL[3:2] “1”: set I2C cell to “pseudo open drain”
[8:6]	reserved	Reserved. Always write 0 to these bits.
[5]	DCPDN	Control all pull-down resistors of the IOs Valid if bit [10] is “1” “0”: All pull-downs are disabled “1”: All pull-downs are enabled
[4]	DCPUP	Control all pull-up resistors of the IOs Valid if bit [10] is “1” “0”: All pull-uos are disabled “1”: All pull-ups are enabled
[3:2]	OUTDR	Output driver strength Valid if bit 10 is "1" Bit selection depends on IO cell type (see “IO Circuit Types” on page 21)

OUTDR[1:0]	BIDI50	BIDI33	SMC	I2C
“00”	±1mA±	±12mA	±1mA	±1mA
“01”	±5mA	±12mA	±30mA	±5mA
“10”	±2mA	±12mA	±2mA	±2mA
“11”	±2mA	±12mA	±5mA	±2mA
x + bit[9] = “1”	-	-	-	pseudo open drain

[1:0]	PITILS	Pin Input Test Input Level Select Valid if bit 10 is "1" "00”: Hysteresis "01”: Automotive "10”: TTL "11”: CMOS

Note
36. When Bit[10] = “0”, all input buffers are disabled in Boundary Scan mode. Then, input of data via external pins to the BSR (Boundary Scan Register) is impossible. Therefore, the minimum setting to allow input to the BSR is 0x0400.

Procedure for Configuration for Port Input

1. MODE clipped to ’1’ and MD[0] clipped to ’0’.
2. Release JTAG_NRST and RSTX.
3. JTAG-Instruction IO_CNTRL (010001).
4. Set IO_CNTRL-reg 10th bit: (e.g. 0000010000000000).
5. JTAG-Instruction SAMPLE -> Port Input

The serial chain starts with the I/O closest to JTAG_TDI pin, and ends with the I/O closest to the JTAG_TDO pin. Details may be obtained from BSDL files released per package.

Flash Parallel Programming

- Flash Parallel Programming (FPP) mode is supported to allow for quick programming/erase of embedded flashes. In this mode program or erase of flash is done using a flash memory programmer directly via external pins. Flash programming is done either in 8-bit or 16-bit mode through the command sequence. Refer to Section 4 of Tightly Coupled Flash Chapter of HWM for details of Flash program/erase command sequence. Flash addressing in this mode is direct physical addressing, with higher order bits used for flash macro selection.
- In CY9DF126 device, there are 2 flash macros of 1MB+64KB size each, and 1 flash macro of 64KB. Details about flash macro sectoring are shown in Table 78.

Table 78. Flash Sector Information

Flash Macro	Macro Size	Small Sectors (8KB/sector)	Large Sectors (64KB/sector)
TCFLASH macro 0	1MB + 64KB	8	16
TCFLASH macro 1	1MB + 64KB	8	16
EEFLASH macro	64KB	8	Not Available

- Details about mapping of flash pins to external pins are presented in Table 79.

Table 79. Flash Pin Mapping to External Pins

External Pin Number (QFP-176)	External Pin Name	Flash Macro Pin	Function
93	P3_24	DFSEL	Flash select signal. Refer Table 84 for additional details regarding use of DFSEL.
126	XTAL0	FCLK	Flash clock
130	MODE	MODE	Mode pin to enter test mode (MODE = ‘1’)
131	RSTX	RSTX	Device Reset pin
103	P3_32	SMD[0]	Set to ‘1’ when entering FPP mode.
104	P1_26	SMD[1]	Set to ‘1’ when entering FPP mode.
105	P1_27	MD[2]	Set to ‘1’ when entering FPP mode.
106	P1_28	MD[1]	Set to ‘1’ when entering FPP mode.
107	P1_29	MD[0]	Set to ‘1’ when entering FPP mode.
98	P3_27	FRSTX	External flash reset pin ‘0’ : Reset ‘1’ : Normal operation
99	P3_28	FRSTRX	External power enable to flash macro at 5V ‘0’ : Reset ‘1’ : Normal operation
6	P1_00	CEX	Flash macro enable ‘0’ : Macro recognizes read/write commands ‘1’ : Neither read operation nor write operation is executed
146	P0_50	WEX	Write enable ‘0’ : Macro recognizes write commands ‘1’ : Macro recognizes read commands
147	P0_51	BYTEX	Byte access enable ‘0’ : 8-bit write mode ‘1’ : 16-bit write mode
68	P3_33	OEX	Direction control signal for shared pins like data and ECC data ‘0’: Shared data/ECC data pins are in output mode ‘1’: Shared data/ECC data pins are in input mode limitation applies for read (output) data (they appear as logical ORed of all FLASHs)
7	P1_01	FA[00]	Flash address. Refer Table 84 for additional details regarding use of FA[21].

Table 79. Flash Pin Mapping to External Pins (Continued)

External Pin Number (QFP-176)	External Pin Name	Flash Macro Pin	Function
8	P1_02	FA[01]	Flash address. Refer Table 84 for additional details regarding use of FA[21].
9	P1_03	FA[02]	
10	P1_04	FA[03]	
11	P1_05	FA[04]	
12	P1_06	FA[05]	
13	P1_07	FA[06]	
16	P1_08	FA[07]	
17	P1_09	FA[08]	
18	P1_10	FA[09]	
19	P1_11	FA[10]	
20	P1_12	FA[11]	
21	P1_13	FA[12]	
22	P1_14	FA[13]	
23	P1_15	FA[14]	
26	P1_16	FA[15]	
27	P1_17	FA[16]	
28	P1_18	FA[17]	
29	P1_19	FA[18]	
30	P1_20	FA[19]	
31	P1_21	FA[20]	
32	P1_22	FA[21]	
33	P1_23	FA[22]	
150	P2_32	DIN[00]/DOR[00]	Shared data input/output Refer "Input Data Table" on page 280.
151	P2_33	DIN[01]/DOR[01]	
154	P2_34	DIN[02]/DOR[02]	
155	P2_35	DIN[03]/DOR[03]	
156	P2_36	DIN[04]/DOR[04]	
157	P2_37	DIN[05]/DOR[05]	
158	P2_38	DIN[06]/DOR[06]	
159	P2_39	DIN[07]/DOR[07]	
160	P2_40	DIN[08]/DOR[08]	
161	P2_41	DIN[09]/DOR[09]	
162	P2_42	DIN[10]/DOR[10]	
163	P2_43	DIN[11]/DOR[11]	
164	P2_44	DIN[12]/DOR[12]	
165	P2_45	DIN[13]/DOR[13]	
166	P2_46	DIN[14]/DOR[14]	
167	P2_47	DIN[15]/DOR[15]	

Table 79. Flash Pin Mapping to External Pins (Continued)

External Pin Number (QFP-176)	External Pin Name	Flash Macro Pin	Function
136	P0_40	EDIN[00]/EDOR[00]	Shared ECC data input/output Refer "Input Data Table" on page 280.
137	P0_41	EDIN[01]/EDOR[01]	
138	P0_42	EDIN[02]/EDOR[02]	
139	P0_43	EDIN[03]/EDOR[03]	
140	P0_44	EDIN[04]/EDOR[04]	
141	P0_45	EDIN[05]/EDOR[05]	
142	P0_46	EDIN[06]/EDOR[06]	
70	P3_35	ECCA	ECC write access enable '0' : ECC write disable '1' : ECC write enable
144	P0_48	RDYR	Internal voltage ready/busy flag at 5V '0' : Busy '1' : Ready
145	P0_49	RDY	FLASH internal state at PPROGRAM, ERASE and power on 0: busy 1: ready Output behaves as open drain (needs pull-up) to support programming multiple devicves at once.
69	P3_34	RD64	64-bit read enable 0 : 32-bit read mode 1 : 64-bit read mode

■ Timing requirements for flash signals are provided in Figure 25 and Table 77.

Figure 25. Flash Timing Parameters

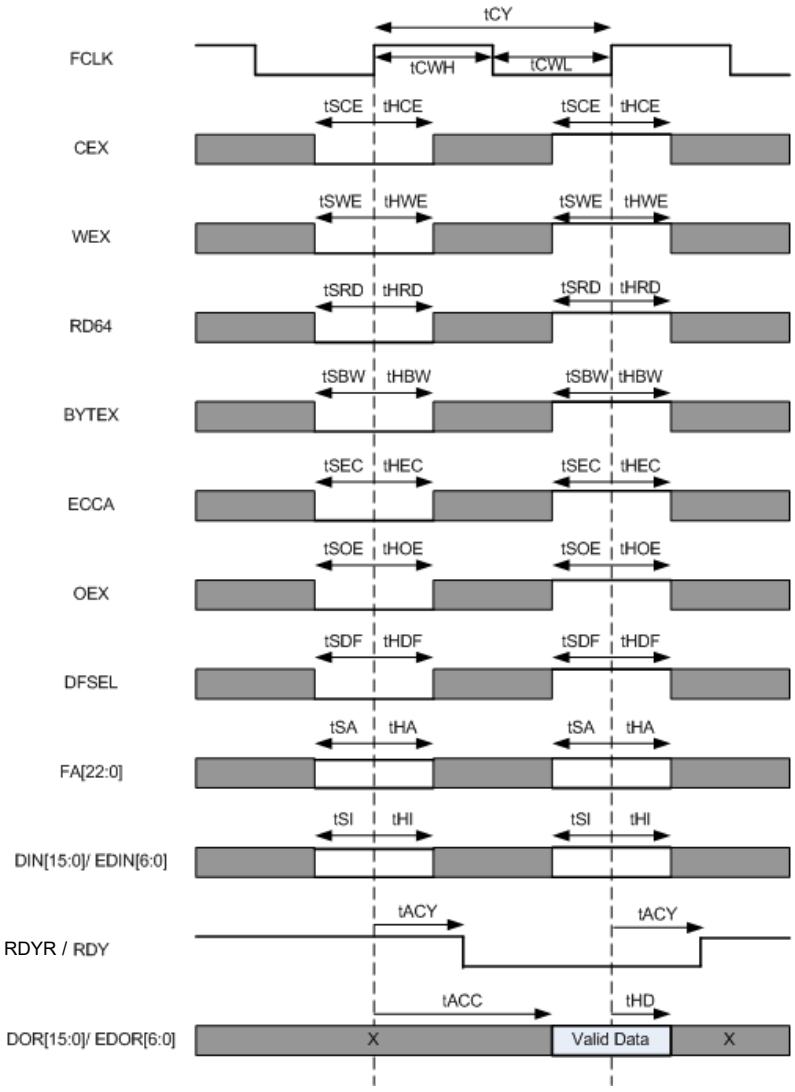

Table 80. Flash Timing Requirements

Parameter	Symbol		Value	Unit
Cycle Time	tCY	min	100	ns
Clock High Time	tCWH	min	25	ns
Clock Low Time	tCWL	min	25	ns
CEX setup	tSCE	min	20	ns
CEX hold	tHCE	min	20	ns
WEX setup	tSWE	min	20	ns
WEX hold	tHWE	min	20	ns
RD64 setup	tSRD	min	20	ns
RD64 hold	tHRD	min	20	ns
BYTEX setup	tSBW	min	20	ns
BYTEX hold	tHBW	min	20	ns
ECCA setup	tSEC	min	20	ns
ECCA hold	tHEC	min	20	ns
OEX setup	tSOE	min	20	ns
OEX hold	tHOE	min	20	ns
DFSEL setup	tSDF	min	20	ns
DFSEL hold	tHDF	min	20	ns
FA setup	tSA	min	20	ns
FA hold	tHA	min	20	ns
DIN/EDIN setup	tSI	min	20	ns
DIN/EDIN hold	tHI	min	20	ns
RDY output delay	tACY	min	80	ns
DOR/EDOR output delay	tACC	min	80	ns
DOR/EDOR hold	tHD	min	5	ns

Notes
37. Input Data should change at falling edge of XTAL0 clock.
38. Output data should be sampled at next rising edge of XTAL0 clock.

Memory Map

- This flash memory consists of 16 sectors of 64k byte (large sector) and 8 sectors of 8k byte (small sector).
- A large sector is composed of 16k word, and a small sector is composed of 2k word. 1word data width is 39bit (regular bit: 32bit + ECC parity bit: 7bit) for both large sector and small sector.

Address Space & Memory Cell Select Address Assignment

- The select address assignment is listed below. The assignment in the large sector and that in the small sector differ.
- When the small sector (FA[20]=0) is selected, no matter what the values (1/0) of FA[19:16] are, the memory cell to be used is determined according to the values of FA[15:0].
- Large Sector (0x100000 ~ 0x1FFFFF)

Table 81. Large Sector (0x100000 ~ 0x1FFFFF)

FA[20]	FA[19:16]	FA[15:2]	FA[1:0]
1	Sector selection (16large sector)	Select a word in the sector (16,384word)	Select a Byte in the word(32bit)

- In read or program mode, an address pin input is ignored as shown below. Apply a given value (1/0) to the corresponding pin. For the correspondence between data output pins and data input pins, see Limitation on CY9DF126 Device and "Input Data Table" on page 280. 8bit program mode (BYTEX=0): Ignore none of FA[20:0] and input 8bit selected in FA[20:0].
- 16bit program mode (BYTEX=1): Ignore FA[0] and input 16bit.
- FPP mode can only output 8 or 16 bit.
- RD64 should always be kept 0.
- BYTEX=0: DQ[7:0] is used
- BYTEX=1: DQ[15:0] is used
- Small Sector (0x0*0000 ~ 0x0*FFFF)

Table 82. Small Sector (0x0*0000 ~ 0x0*FFFF)

FA[20]	FA[15:13]	FA[12:2]	FA[1:0]
0	Sector selection (8small sector)	Select a word in the sector (2,048word)	Select a Byte in the word(32bit)

The left asterisk mark in the value indicates a given value (except an indeterminate value).

- When small sector is selected (FA[20]=0), input a given value (1/0) to FA[19:16] pins.
- In read or program mode, an address pin input is ignored as shown below. Apply a given value (1/0) to the corresponding pin. For the correspondence between data output pins and data input pins, see Limitation on CY9DF126 Device and Input Data Table. Note the limitation in Limitation on CY9DF126 Device.
- 8-bit program mode (BYTEX=0): Ignore none of FA[20,15:0] and input 8bit selected in FA[20,15:0].
- 16-bit program mode (BYTEX=1): Ignore FA[0] and input 16bit.
- FPP mode can only output 8 or 16 bit.
- RD64 should always be kept 0.
- BYTEX=0: DQ[7:0] is used
- BYTEX=1: DQ[15:0] is used

Limitation on CY9DF126 Device

CY9DF126 device has the following limitation:

Reading works only, when both other FLASHs are programmed with all-0 (output data of 3 FLASHs is logically ORed). Therefore, reading of FLASH is not supported.

- Programming/erasing FLASH can be done by checking RDY, verifying of read data is not possible
- It is recommended to choose a JTAG programmer

Input Data Table

- In 8bit program mode, the data of the different input pins based on the FA[0] values is programmed as shown in Table 83.
- When ECCA=1 is input at the program data input, the data is written to ECC parity bit as well as Regular bit. When ECCA=0 is input at the program data input, the data is written only to Regular bit. In this case, EDIN[6:0] input value is “don’t care” and regardless of the value, no value is written to ECC parity bit. In the case of erase operation, regardless of input values to ECCA, both Regular bit and ECC parity bit are erased together.

Table 83. Correspondence Table of Data Input and Memory Cell Bit in Program Bit Modes

Bit Mode	BYTEX	Write Cycle	Select Address				Data Input pins		
			FA[#]	FA[1]	FA[0]	ECCA	DIN[15:8]	DIN[7:0]	EDIN[6:0]
16bit	1	Command data input	1/0	1/0	1/0	1/0	any	command data 7-0	any
		Program data input	1	1	1/0	1	Odd. Sector Regular bit 31-24	Odd. Sector Regular bit 23-16	Odd. Sector Parity bit 6-0
						0			any
				0	1/0	1	Odd. Sector Regular bit 15-8	Odd. Sector Regular bit 7-0	Odd. Sector Parity bit 6-0
						0			any
			0	1	1/0	1	Even Sector Regular bit 31-24	Even Sector Regular bit 23-16	Even Sector Parity bit 6-0
						0			any
				0	1/0	1	Even Sector Regular bit 15-8	Even Sector Regular bit 7-0	Even Sector Parity bit 6-0
						0			any
8bit	0	Command data input	1/0	1/0	1/0	1/0	any	command data 7-0	any
		Program data input	1	1	1	1	Odd. Sector Regular bit 31-24	any	Odd. Sector Parity bit 6-0
						0			any
					0	1	any	Odd. Sector Regular bit 23-16	Odd. Sector Parity bit 6-0
						0			any
				0	1	1	Odd. Sector Regular bit 15-8	any	Odd. Sector Parity bit 6-0
						0			any
					0	1	any	Odd. Sector Regular bit 7-0	Odd. Sector Parity bit 6-0
						0			any
			0	1	1	1	Even Sector Regular bit 31-24	any	Even Sector Parity bit 6-0
						0			any
					0	1	any	Even Sector Regular bit 23-16	Even Sector Parity bit 6-0
						0			any
				0	1	1	Even Sector Regular bit 15-8	any	Even Sector Parity bit 6-0
						0			any
					0	1	any	Even Sector Regular bit 7-0	Even Sector Parity bit 6-0
						0			any

- “Any” a value of either 1 or 0.
- FA[#] indicates the lowest bit of sector-selected address, i.e. FA[16] when the large sector is selected (FA[n]=1), and FA[13] when the small sector is selected (FA[n]=0). When programming, in both 8bit mode and 16bit mode, program/erase operation is executed per one sector specified by the selected addresses.
- Program Data Input means the 4th write cycle of a program command in the normal operation state and the 2nd write cycle of a program command in the Unlock-bypass state.
- Command Data Input means the write cycles in the write command sequence other than those mentioned above in which program data is input.

Flash Macro Selection and Address Mapping in FPP

- Individual flash macros can be accessed using the address decoding scheme as mentioned in Table 84.

Table 84. Flash Macro Selection

DFSEL	FA[21]	Flash Macro selection
0	0	TCFLASH macro 0
0	1	TCFLASH macro 1
1	X	EEFLASH macro

- However, device level memory map differs from actual physical address to flash macro. Hence, it is expected that the flash parallel programmer must translate CPU mode addressing to actual physical address to flash. Hence, CPU execution code must be located at physical addresses that are mapped to the CPU mode addresses.
- Translation of CPU mode address to actual physical address differs based on whether small or large sectors are accessed. Address translation for small sectors of TCFLASH macro 0 and 1 is as shown in Table 85.

Table 85. TCFlash Small Sectors Address Translation

Flash Address Bit	CPU Address Bit
FA[21]	0
FA[20]	0
FA[19]	0
FA[18]	0
FA[17]	0
FA[16]	0
FA[15]	ADDR[15]
FA[14]	ADDR[14]
FA[13]	ADDR[02]
FA[12]	ADDR[13]
FA[11]	ADDR[12]
FA[10]	ADDR[11]
FA[09]	ADDR[10]
FA[08]	ADDR[09]
FA[07]	ADDR[08]
FA[06]	ADDR[07]
FA[05]	ADDR[06]
FA[04]	ADDR[05]

Notes
39. Small sectors are interleaved (even and odd sectors). Even numbered sectors provide lower 4 byte and odd numbered sectors provide upper 4 byte of a 64 bit FLASH line.
40. Address translation for large sectors of TCFlash is shown in Table 86.

Table 85. TCFlash Small Sectors Address Translation

Flash Address Bit	CPU Address Bit
FA[03]	ADDR[04]
FA[02]	ADDR[03]
FA[01]	ADDR[01]
FA[00]	ADDR[00]

Notes
39. Small sectors are interleaved (even and odd sectors). Even numbered sectors provide lower 4 byte and odd numbered sectors provide upper 4 byte of a 64 bit FLASH line.
40. Address translation for large sectors of TCFlash is shown in Table 86.

Table 86. TCFlash Large Sectors Address Translation

Flash Address Bit	CPU Address Bit
FA[21]	ADDR[03]
FA[20]	1
FA[19]	ADDR[20]
FA[18]	ADDR[19]
FA[17]	ADDR[18]
FA[16]	ADDR[02]
FA[15]	ADDR[17]
FA[14]	ADDR[16]
FA[13]	ADDR[15]
FA[12]	ADDR[14]
FA[11]	ADDR[13]
FA[10]	ADDR[12]
FA[09]	ADDR[11]
FA[08]	ADDR[10]
FA[07]	ADDR[09]
FA[06]	ADDR[08]
FA[05]	ADDR[07]
FA[04]	ADDR[06]
FA[03]	ADDR[05]
FA[02]	ADDR[04]
FA[01]	ADDR[01]
FA[00]	ADDR[00]

Notes
41. Large sectors of TCFLASH are 4-times interleaved for best read performance (see also “FCR4 Cluster Series Hardware Manual (002-09388)” Figure. 9.3-2 TCFLASH sector/address mapping - CPU mode).
42. Large sectors are interleaved (even and odd numbered sectors). Even numbered sectors provide lower 4 byte and odd numbered sectors provide upper 4 byte of a 64 bit FLASH line.
43. Address space is interleaved between TCFLASH0 and TCFLASH1. TCFLASH0 keeps lower 8 byte and TCFLASH1 keeps upper 8 byte of a 128 bit FLASH line (2 FLASHs are read in parallel).
44. EEFlash macro small sectors address translation is as shown in Table 87.

Table 87. EEFlash Small Sectors Address Translation

Flash Address Bit	CPU Address Bit
FA[15]	ADDR[15]
FA[14]	ADDR[14]
FA[13]	ADDR[13]
FA[12]	ADDR[12]
FA[11]	ADDR[11]
FA[10]	ADDR[10]
FA[09]	ADDR[09]
FA[08]	ADDR[08]
FA[07]	ADDR[07]
FA[06]	ADDR[06]
FA[05]	ADDR[05]
FA[04]	ADDR[04]
FA[03]	ADDR[03]
FA[02]	ADDR[02]
FA[01]	ADDR[01]
FA[00]	ADDR[00]

Flash Power On Sequence

■ Prior to entering flash parallel programming mode, the sequence mentioned below must be followed:

1. Apply following constant pin setting: MODE = 1 and MD[2:0] = 111. The pins for MD[2:0] have pull-up, thus can be left open.
2. Assert RSTX = 0 and JTAG_nTRST = 0. The pin JTAG_nTRST has pull-down, so it will be kept in reset by the device if it is left open. Asserting FRSTX = 0 and FRSTRX = 0 is optional. This is done internally at device startup.
3. Ramp up the power supply (please refer to device specific datasheet for power supply sequence) and wait till all power suppliess (VDP5, VDP3 & VDD) are stable
4. Wait for at least 500ns after all power supplies are stable.
5. De-assert RSTX= 1, also deassert FRSTX = 1 and FRSTRX = 1 if those were asserted before.
6. Wait until Flash Parallel Programming mode is entered by the bootROM program (boot time). Wait time should be >=2.5 ms after RSTX release. Note that the wait time is necessary because RDY pin is High-Z before FPP mode is entered. Looking at RDY (which has pull-up) alone would cause mis-interpretation before that time is elapsed.
7. Flash access is possible after RDY pin goes to “1” . Clock supply is needed for monitoring RDY.

■ RDY pin is pseudo open drain and thus needs a pull-up resistor. That makes it possible to program multiple devices at once by using wired-AND of the RDY outputs, to detect when slowest device becomes ready.

■ Failure to follow the above sequence can result in indeterminate behavior. Once the above sequence is completed, flash parallel programming mode may be entered.

Flash parallel programming mode standard usage:

Entering FPP by releasing RSTX while keeping

- MODE = ‘1’
- MD[1] = ‘1’ , MD[0] = ‘1’
- SMD[2] = ‘1’ , SMD[1] = ‘1’ , SMD[0] = ‘1’
- Furthermore, Flash parallel programming mode may be entered using 2 options:
    1. Setting MCFG_DTAR:FPPREQ
    2. Setting MCFG_TSR:MD= ’XXX111’, and MCFG_TSR:SMD= ’11111’
- Once flash parallel mode is requested, the bit SYSC_MCR:FPPEN is set, which enables entry to FPP mode. However, it must be noted that FPP access must also be enabled in Security Description Record (SDR) (see HWM).
- The external programmer must also take care to program ECC bits for flash data contents. This also applies to flash erase, where bit flipping (XOR with 0x73) is to be performed to handle ECC checking for erased flash.

Figure 26. Power On Sequence

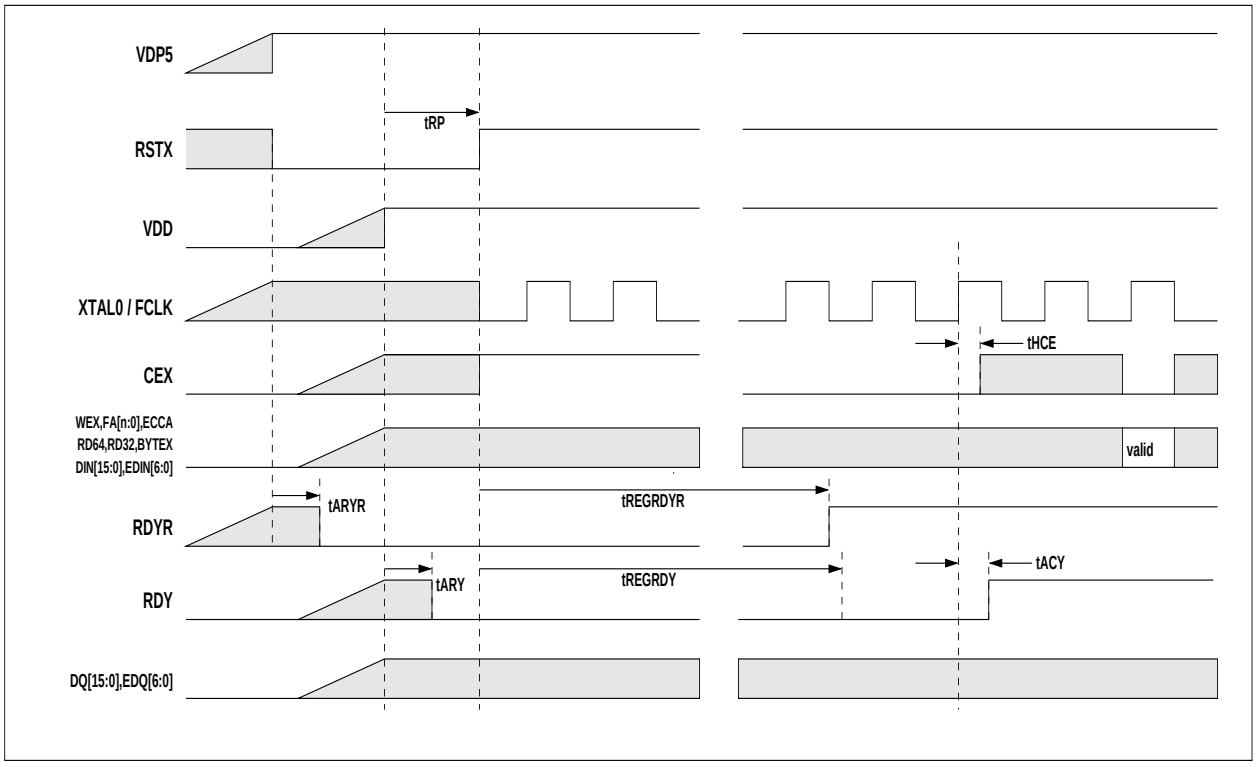

Recommendation: FRSTX = FRSTRX = ’1’

Table 88. Timing Parameters Related to Power ON Sequence

Parameter	Symbol	Value		Unit
		Min	Max	
Hardware Reset(FRSTX=0) period	tRP	440	-	ns
Hardware Reset(RSTX=0) period	tRP	500	-	ns
FRSTRX fall to RDYR fall access	tARYR	-	80	ns
FRSTX fall to RDY reset	tARY	-	80	ns
FRSTRX rise to RDYR rise access	tREGRDYR	-	80	ns
FRSTRX rise to RDY rise access	tREGRDY	-	80	ns

Debug and Trace

- A standard 5-pin JTAG interface is supported for debug and trace. Conventional debug (core halted, and invasive) as well as trace debug (core not halted and non-invasive) are supported. The procedures for debug and trace are based on Arm Coresight technology. The features for debug are:
- Secure mode entry for debugger
- Up to 8 breakpoints, or 8 watchpoints
- Tracing support is provided on both packages as shown below:
- QFP-176: 4-bit, 8-bit trace data shared with resources.
- Trace port to pin mapping in QFP-176 (see Table 89).

Table 89. Trace Port to External Pin Mapping

External Pin Number (QFP-176)	External Pin Name	Trace Port
106	P1_28	DBG0_CTL
107	P1_29	DBG0_CLK
104	P1_26	DBG0_TRACE0
105	P1_27	DBG0_TRACE1
45	P1_30	DBG0_TRACE2
46	P1_31	DBG0_TRACE3
47	P1_32	DBG0_TRACE4
48	P1_33	DBG0_TRACE5
66	P1_24	DBG0_TRACE6
67	P1_25	DBG0_TRACE7

- Package QFP-176 has no dedicated trace pins. See the Port Pin Multiplexing table (Table 18 on page 25) in “Port Pin Multiplexing” on page 25 for relevant pins and the corresponding settings for their activation.
- In general, additional information regarding debug and trace methodology can be obtained from Coresight TRM provided by Arm Limited. However, an additional characteristic is the support of security feature to prevent unauthorized access through the debug port. At the time of initiating the debugger access, it depends on the security configuration of the device, whether it is necessary to transmit a security key. The security key can only be transmitted once after reset. If a wrong key is entered, further accesses are disabled, and the only method to regain access is through application of external reset.
- In the device, trace support is provided for the following components/busses:
    1. Embedded Trace Macro (ETM) and Instrumentation Trace Macro (ITM) for processor core.
    2. Two independent AHB bus trace macro (HTM) for up to 8 busses. Refer Table 90 for details.
- Further, Cross Trigger Interface (CTI) macros are included to support cross triggering among all the above macros.

Table 90. HTM Trace Sources

Bus	Width (bits)	Source ID
DMA master	64	1
PERI4 master	32	2
MEMORY_CONFIG slave	64	3
MCU_CONFIG slave	32	4
PERI5 slave	32	5
PERI3 slave	64	6
PERI4 slave	32	7
HSSPI slave	32	8
EBI slave	32	9

- Power domain on/off status information can be obtained through debug port by accessing register on memory mapped address 0xB0509400. This provides an easy method to obtain information on current state of power domains, without the need to access device level internal registers. See Table 91 on page 286 for details.

Table 91. Power Domain Status Information for Debugger

Bit Number	Function
31:3	Reserved
2	PD4 on/off status ‘0’ : Power domain is off ‘1’ : Power domain is on
1	PD3 on/off status ‘0’ : Power domain is off ‘1’ : Power domain is on
0	PD2 on/off status ‘0’ : Power domain is off ‘1’ : Power domain is on

Handling Devices

Preventing Latch-up

- Latch-up may occur in a CMOS IC if a voltage higher than (V_{DD}, V_{DP3} or V_{DP5}) or less than (V_{SS}) is applied to an input or output pin or if a voltage exceeding the rating is applied between the power supply pins and ground pins. If latch-up occurs, the power supply current increases rapidly, sometimes resulting in thermal breakdown of the device. Therefore, be very careful not to apply voltages in excess of the absolute maximum ratings.

Handling of Unused Input Pins

- If unused input pins are left open, abnormal operation may result. Any unused input pins should be connected to pull-up or pull-down resistor (2kΩ to 10kΩ) or enable internal pullup or pulldown resistors (PUE/PDE) before the input enable (PIE) is activated by software. The pins of circuit type MODE can be connected to V_{SS} or $V_{DP}5$ directly.

Power Supply Pins

- In FCR4 series, devices including multiple power supply pins and ground pins are designed as follows: pins necessary to be at the same potential are interconnected internally to prevent malfunctions such as latch-up. All of the power supply pins and ground pins must be externally connected to the power supply and ground respectively in order to reduce unnecessary radiation, to prevent strobe signal malfunctions due to the ground level rising and to follow the total output current ratings. Furthermore, the power supply pins and ground pins of the FCR4 series must be connected to the current supply source via a low impedance.
  It is also recommended to connect a ceramic capacitor of approximately 0.1 μF as a bypass capacitor between power supply pin and ground pin near this device. If DV_{CC} is not set to the same voltage level as AV_{DD5}, the ZPD functionality of SMC pins cannot be used.

Power on Sequence

- At any time, the difference between the power supply pins belonging to the same voltage level must not exceed 0.5V. This especially applies to the power on sequence. Otherwise, the risk of latchup will increase. Figure 27 on page 288 shows the power on sequence and the groups of power supply that might be used, depending on the actual application.
- Furthermore, V_{DP5} supply must be switched on before any other power supply or at least at the same time. The following conditions must be fulfilled at any moment:
  1. The voltage of V_{DP5} must be higher or equal than the voltage on V_{DE5}, AV_{DD5} and AV_{RH5}.
  2. ForCY9DF126, CY9DF126B the voltage of V_{DP3} must be higher or equal than the voltage on V_{DD} and V_{DDA}. In particular, V_{DP3} must not be switched off for saving power.
  3. The supply voltage for MODE and RSTX pins must reach the minimum operational value before switching on core voltage suppy.
  4. APIX module, which is supplied by V_{DEA}, must be able to receive a reset signal from the core domain, so the corresponding power supply must be within the operational range while the reset occurs.

Figure 27. Power on Sequence

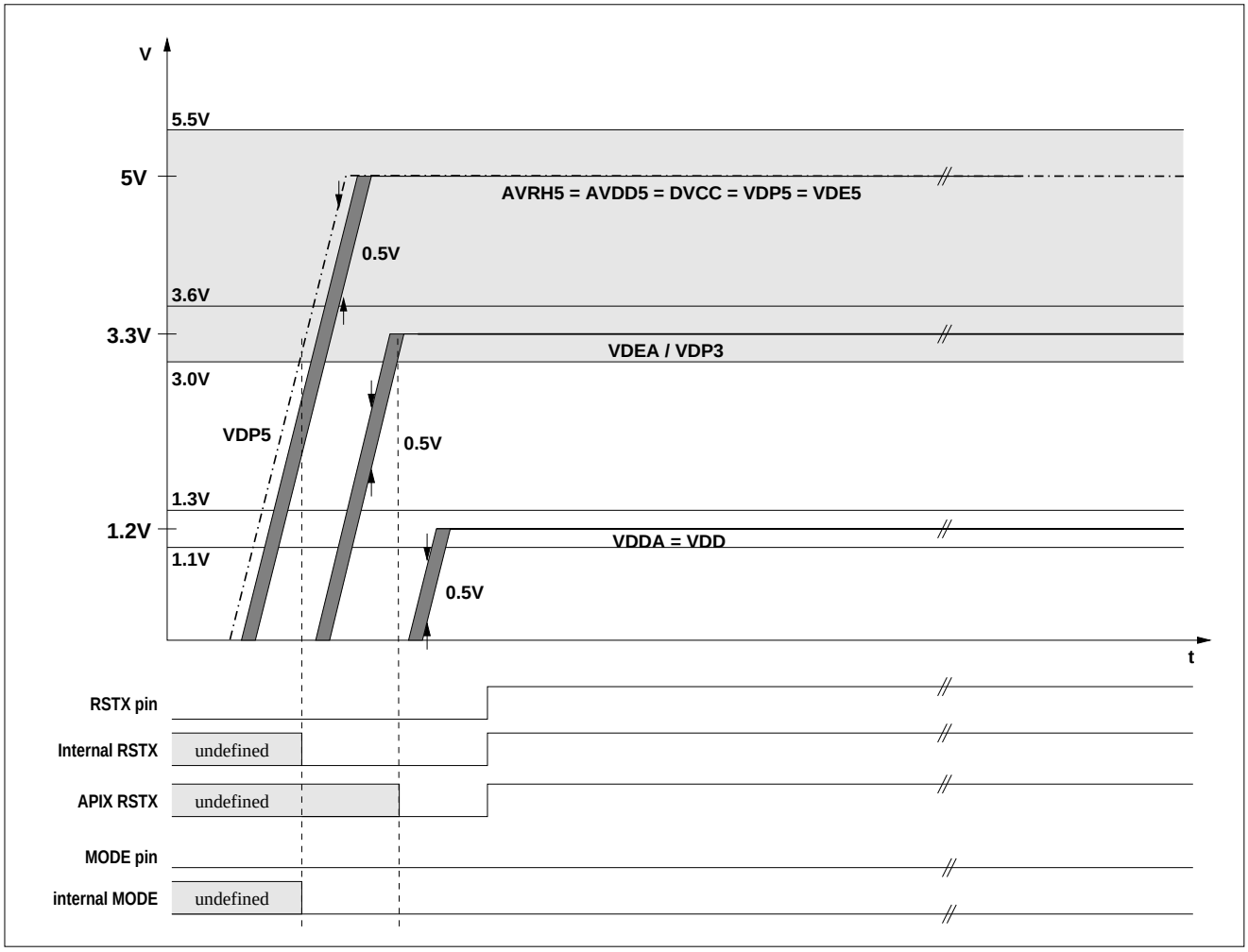

Note It is possible to switch off V_{DP3} for saving power for CY9DF126C, not applicable for CY9DF126, CY9DF126B.

Pin State while Power-On-Reset

■ Table 92 shows the state of output/bidirectional pins during Power-On-Reset. For subsequent reset or power saving states, the pin state can be programmed according to the possibilities listed in HWM. Before software execution is started, however, the user must pay attention to the listed behavior.

Table 92. Pin State during Active Power-On-Reset

Pin Type	Reset State
JTAGO	HIZ
BIDI50	HIZ
BIDI33	HIZ
SMC	HIZ
I2C	HIZ
SDOUT	HIZ

Crystal Oscillator Circuit

- Noise in proximity to the XTAL0/X0/X0A and XTAL1/X1/X1A pins can cause the device to operate abnormally. Printed circuit boards should be designed so that the XTAL0/X0/X0A and XTAL1/X1/X1A pins, and crystal oscillator, as well as bypass capacitors connected to ground, are located near the device and ground.
  It is recommended that the printed circuit board layout be designed such that the XTAL0/X0/X0A and XTAL1/X1/X1A pins are surrounded by ground plane for the stable operation.
  Please request the oscillator manufacturer to evaluate the related characteristics of the crystal and this device.

Notes on using External Clock

Opposite Phase Clock Supply: Oscillation Mode

- When using the external clock, it is possible to simultaneously supply the XTAL0/X0/X0A and XTAL1/X1/X1A pins. In the described combination XTAL0/X0/X0A should be supplied with a clock signal which has the opposite phase to the XTAL1/X1/X1A pins. However, in this case the stop mode (oscillation stop mode) must not be used (This is because the XTAL1/X1/X1A pin stops at ”H” output in STOP mode).
- With opposite phase supply at XTAL0/X0 and XTAL1/X1, a frequency up to 16 MHz is possible.

Example of using Opposite Phase Supply

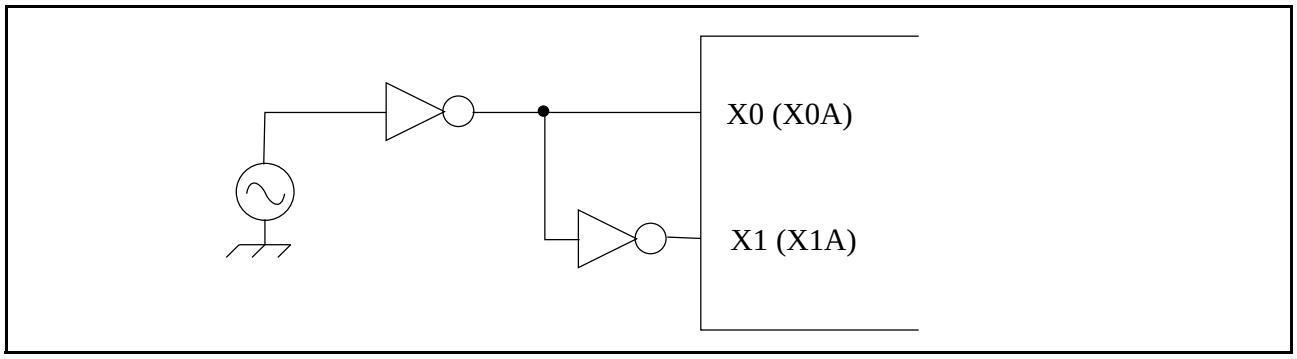

Single Phase Clock Supply

- For lower frequencies, up to 4 MHz, it is possible to supply a single phase clock at XTAL0/X0.

Figure 28. Example of using Single Phase Supply

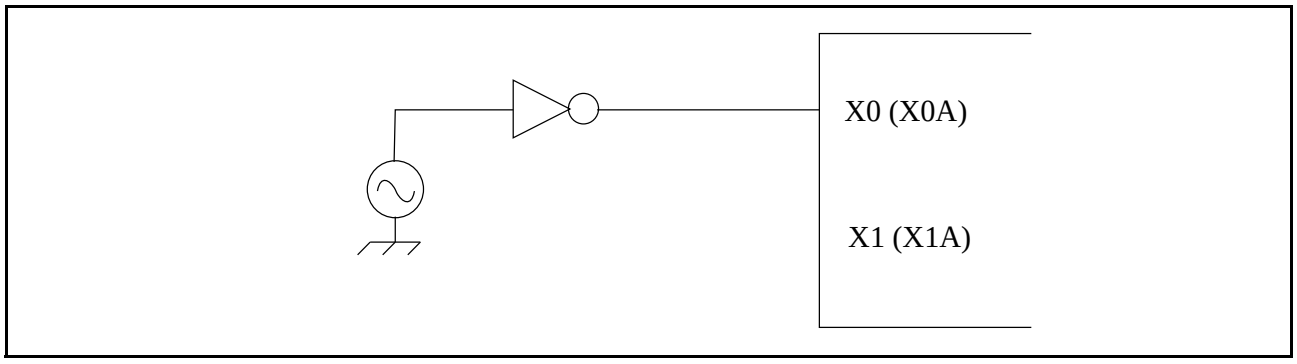

Single Phase Clock Supply: Fast Clock Input Mode

- When a high frequency clock needs to be fed, it is possible to directly supply a single phase clock at XTAL0/X0. For this mode:
  - SYSC_SPCCFGR:FCIMEN bit must be set to “1”.
  - the input clock must have 50% duty cycle.

Example of using Fast Clock Input Mode

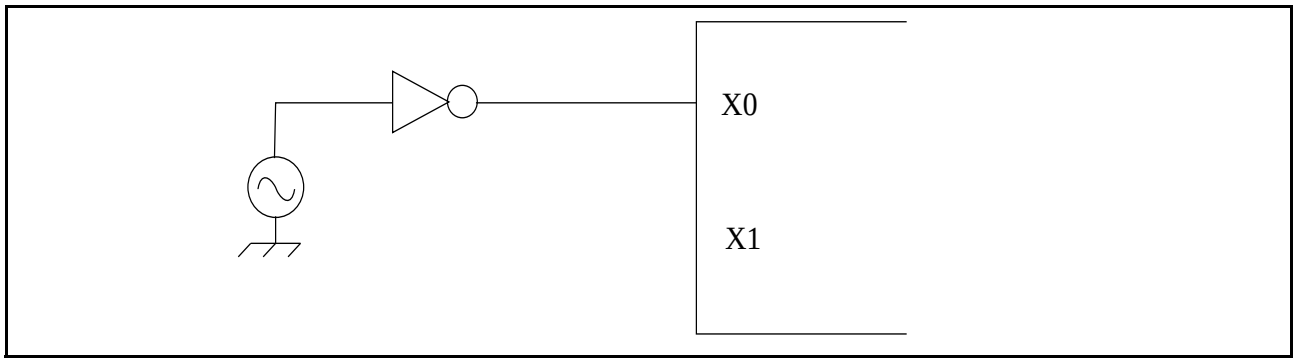

Unused Sub clock Signal

- If the pins X0A and X1A are not connected to an oscillator, a pull-down resistor must be connected on the X0A pin and the X1A pin must be left open.

Errata

This section describes the errata for the Atlas, CY9DF126. Details include errata trigger conditions, scope of impact, available workaround, and silicon revision applicability. Contact your local Cypress Sales Representative if you have questions.

Product Status: In Production

The following table defines the errata applicability to available Atlas, CY9DF126BPMC-GSE2 and CY9DF126CPMC-GSE2.

Items	Part Number	Fix Status
[1.]. Flash Erase Suspend Issue	CY9DF126BPMC-GSE2 CY9DF126CPMC-GSE2	No silicon fix planned. Use workaround.
[2]. TCFlash TCM Access		
[3]. TCFlash AXI Access		
[4]. EEFlash FAWC=0 Access		
[5]. SYSCON SCT Register Protection		No silicon fix planned. No workaround available.
[6]. FLASH Parallel Programming Mode		No silicon fix planned. Use workaround.
[7]. RTC IRQ Wakeup		
[8]. External Bus Hang-up		
[9]. EEFlash Single Bit ECC Error		
[10]. EICU Capture Misoperation		
[11]. IRQ Unit Register Read Timing Issue		
[12]. IUNIT Interrupt Handling Problem		
[13]. IUNIT Nesting Level Status Problem		
[14]. 1.2V LVD VDP3 Supply Problem	CY9DF126BPMC-GSE2	Silicon fix planned. Use workaround.
	CY9DF126CPMC-GSE2	Silicon fix done. No limitation.
[15]. Clock Supervisor Disable-Enable Problem	CY9DF126BPMC-GSE2 CY9DF126CPMC-GSE2	No silicon fix planned. Use workaround.
[16]. SCT Compare Value Update Limitation		
[17]. Flash Execution Limitation		No silicon fix planned. No workaround available.
[18]. RTC Configuration Synchronization Problem		No silicon fix planned. Use workaround.
[19]. PSS Wakeup Problem		
[20]. 3V IO Doman ESD Diode	CY9DF126BPMC-GSE2	Silicon fix planned. Use workaround.
	CY9DF126CPMC-GSE2	Silicon fix done. No limitation.
[21]. Undefined Port Pin State while Core Supply (VDD) is Unavailable	CY9DF126BPMC-GSE2 CY9DF126CPMC-GSE2	Silicon fix planned. Use workaround.

<table>
<tr><th colspan="2">1. Flash Erase Suspend Issue</th></tr>
<tr><td>Problem Definition</td><td>The functional limitation was found with Flash memory implemented in the FCR4 cluster series MCUs. After issuing a Flash memory erase suspend command during Flash memory erase operation data of Flash memory may not be correctly readable even when the erase suspend state is reached. This functional limitation can only occur when erase suspend is used.</td></tr>
<tr><td>Conditions for Functional Limitation</td><td>The limitation may occur when all following conditions are met:
■ The sector erase suspend command is issued during sector erase.
■ When a read command is issued to one of the sectors inside the Flash macro currently in sector erase suspend state.</td></tr>
<tr><td>Details of the Limitation</td><td>Data may not be read correctly irrespective of the large sectors or small sectors if the following operations are executed in sequence:
■ The sector erase suspend command is issued to the flash memory during sector erase.
■ After the state of the sector erase suspend is completed, the reading operation for the flash memory (instruction read or data read) is performed.
In this case, the read data are undefined. After this, read data will remain undefined until the sector erase resume command is issued. Combination of operating conditions for flash memories is the following table.
Table 95. Combination of Operating Conditions for Flash Memories (FCR4 Family)
<table>
<tr><th></th><th>Flash Memory to which the Sector Erase Suspend Command is Issued</th><th>Flash Memory from which Data is Read</th><th>Read Value of Data in the Sector Erase Suspend State</th></tr>
<tr><td>1</td><td>TC Flash-A</td><td>TC Flash-A</td><td>Undefined</td></tr>
<tr><td>2</td><td>TC Flash-B</td><td>TC Flash-B</td><td>Undefined</td></tr>
<tr><td>3</td><td>EE Flash</td><td>EE Flash</td><td>Undefined</td></tr>
<tr><td>4</td><td>TC Flash-A</td><td>TC Flash-B / EE Flash</td><td>Normal</td></tr>
<tr><td>5</td><td>TC Flash-B</td><td>TC Flash-A / EE</td><td>Normal</td></tr>
<tr><td>6</td><td>EE Flash</td><td>TC Flash-A / TC Flash-B</td><td>Normal</td></tr>
</table></td></tr>
<tr><td>Causes of the Limitation</td><td>The flash memory control circuit consists of the following two circuits:
■ The circuit to control automatic algorithm execution for sector erase operation.
■ The circuit, which receives the sector erase suspend command from the above mentioned circuit, to stop the automatic algorithm execution and to switch to the state where the read operation is enabled.
The limitation is caused by the circuitry changing the erase state to erase suspend state not allowing normal data read.</td></tr>
<tr><td>Workaround</td><td>Refer to “Workaround for Flash Erase Suspend Issue” on page 313.</td></tr>
<tr><td>Fix Status</td><td>There is no plan to fix this limitation. SW workaround is available.
The following software products (all releases) are not affected by this limitation, because they do not use erase suspend:
■ FCR4 MCAL (SW-MCAL31-DRV-FCR4-E01, SW-MCAL31-DRV-FCR4-E02, SW-MCAL40-DRV-FCR4-E01)
■ FCR4 FEE/FLS (SW-FEEFLS-DRV-FCR4-E01, SW-FEE40-DRV-FCR4-E01)</td></tr>
</table>

2. TCFlash TCM Access	
Problem Definition	A problem was found in the instruction fetch from TCFlash over TCM at all wait cycle settings on 32-bit FCR4 Cluster Series MCUs. This problem is called 'TCFlash TCM Access Problem'.
Trigger Conditions	Problem may occur if all of the following conditions are met: ■ Instruction fetch and data access from TCFlash over TCM port ■ TCFCFG_FCFGR:FAWC[1:0] set to 0, 1, 2 or 3 (00, 01, 10, 11)
Rootcause	Wrong interpretation of TCM protocol in case of instruction fetch idle.
Workaround	Refer to "Workaround for TCFlash TCM Access" on page 314.
Fix Status	There is no plan to fix this limitation. SW workaround is available.

3. TCFlash AXI Access	
Problem Definition	A problem was found in the instruction fetch from TCFlash over AXI on 32-bit FCR4 Cluster Series MCUs. This problem is called "TCFlash AXI Access Problem".

Trigger Conditions	Problem may occur if all of the following conditions are met:
	■ Code execution from TCFlash over AXI port
	■ Flash content (including inline literals and constants) pre-fetched by CPU and interpreted by CPU pipeline as jump/branch instructions where the target address is located in reserved TCFlash AXI address space.
	Example Code:
	`; Label is linked to address 0x01000018`
	`test_start:`
	`MOV R0, #0 ; "a": Prerequisite for this example`
	`CMP R0, #4 ; "a": Prerequisite for this example`
	`BHI test_end ; "a": Prerequisite for this example (branch not taken)`
	`LDRB R1, [PC, R0] ; "a": Loading inline literal`
	`ADD PC, PC, R1,LSL #+2 ; "a": Branch over inline literals`
	`DATA`
	`DCB 0x1,0x5,0xA,0xA ; "b": Inline literal, if interpreted as code:`
	`; 0x0A0A0501 -> BEQ 0x281404`
	`; (branch to address 0x01281438,`
	`; which is reserved TCFlash AXI address space)`
	`ARM`
	`MOV R0, R0 ; "c": Code continues here`
	`test_end:`
	`B test_end ; "c":`

3. TCFlash AXI Access (Continued)	
Rootcause	■ If code in TCFlash is similar as follows: a. Normal code block ending with jump/branch to "c" b. Data section or inline literals directly following the normal code block "a" c. Other normal code block (continuing code execution from "a"). ■ Due to pre-fetch and pipeline behaviour of Arm® Cortex-R4®, the CPU already starts decoding of "b" while execution of “a” is still in progress. Depending on the binary value of "b" a jump/branch instruction could be decoded. In this case, a new pre-fetch from that potential target address is started. If this potential target address is located in a reserved TCFlash AXI address space, an error response from the TCFlash AXI slave is generated. In a correct implementation this error response reaches the CPU at the right time and is discarded if the jump/branch to this potential target address is not taken. ■ The current implementation of TCFlash AXI slave generates the error response too early for an access to a reserved address. Therefore, this early error response is wrongly assigned by the CPU to the current instruction within “a”, and not to the pre-fetch from the potential target address (decoded from "b"). The CPU will then issue an "abort exception".
Workaround	Refer to “Workaround for TCFlash AXI Access” on page 316.
Fix Status	There is no plan to fix this limitation. SW workaround is available.

4. EEFlash FAWC=0 Access	
Problem Definition	A problem was found in the data access from EEFlash at wait cycle settings 0 on 32-bit FCR4 Cluster Series MCUs. This problem is called “EEFlash FAWC=0 Access Problem”.
Trigger Conditions	Problem may occur if all of the following conditions are met: ■ Data access from EEFlash ■ EEFCFG_CR:FAWC[1:0] set to 0 (00), (remark: default FAWC=11)
Rootcause	Wrong access cycles of EEFlash Interface state machine in case of 0 wait cycles.
Workaround	Use data access from EEFlash only with setting EEFCFG_CE:FAWC[1:0]=1, 2 or 3 (01, 10 or 11).
Fix Status	There is no plan to fix this limitation. SW workaround is available.

5. SYSCON SCT Register Protection	
Problem Definition	A problem was found in the PPU access protection of SCT* registers of the System Controller on 32-bit FCR4 Cluster Series MCUs. This problem is called “SysCon SCT Register Protection”.
Trigger Conditions	The following registers from SCT register set do not have register protection implemented in logic: ■ SYSC_${CLOCK}SCTTRG ■ SYSC_${CLOCK}SCTSTATR ■ SYSC_${CLOCK}SCTICLR where $CLOCK is {SRC, RC, MAIN, SUB} The error response is not generated when they are accessed in user mode and their PPU attributes (read, access) are at "0". Read data is correct. Remaining registers from the complete set are correct.
Rootcause	Missing PPU protection circuitry at address decoders of given registers.
Workaround	No workaround available. No impact to register function, but safety related issue.
Fix Status	There is no plan to fix this limitation.

6. FLASH Parallel Programming Mode	
Problem Definition	A problem was found in the Flash Parallel Programming mode on 32-bit FCR4 Cluster Series MCUs. In Flash Parallel Programming mode, it is not possible to read back data which is written to Flash memory. This problem is called “Flash Parallel Programming Mode Problem”.
Trigger Conditions	There are no conditions. Problem always occur when trying to read data from Flash memory in Flash Parallel Programming mode.
Rootcause	OR'ing of output data of all implemented Flash macros without considering selected Flash macro via address lines.
Workaround	Two possible workarounds exist. 1. Using RDY output for write data validation The Flash macro auto algorithm is self-checking the validity of written data (after each write of individual word). On validation success of the written word, the RDY output is pulled high consecutively within a maximum time of 288us (8-bit programming mode), resp. within a maximum time of 384us (16-bit programming mode). If validation fails then RDY will remain low beyond these times. CY9EF126, Calypso : RDY is on Pin 215 (BGA320), Pin 63 (QFP296), GPIO P1_57 CY9DF126, Atlas : RDY is on Pin 145 (QFP176), Pin 249 (QFP296), GPIO P0_49 2. Using JTAG access for write data validation The Flash memory can be accessed via JTAG connection.
Fix Status	There is no plan to fix this limitation. A workaround is available.

7. RTC IRQ Wakeup	
Problem Definition	A problem was found in the Wakeup from RTC (Real Time Clock) IRQ (Interrupt) in PSS (Power Saving State) on 32-bit FCR4 Cluster Series MCUs. The MCU does not wake up from RTC interrupt(s) due to the transition from PSS to RUN state is not performed correctly, operation stops. Other wakeup sources cannot recover this state, recovery only by external reset. This problem is called “RTC IRQ Wakeup Problem”.
Trigger Conditions	The problem occurs if all of the following conditions are met: ■ MCU is in PSS state ■ CLK_RC is disabled during PSS state ■ At least one of the following RTC IRQ is enabled and is triggering: ❒ RTC_WINS:CALD (enabled by RTC_WINE:CALDE = 1) ❒ RTC_WINS:CFD (enabled by RTC_WINE:CFDE = 1) ❒ RTC_WINS:DAY(enabled by RTC_WINE:DAYE = 1) ❒ RTC_WINS:HOUR(enabled by RTC_WINE:HOURE = 1) ❒ RTC_WINS:MIN(enabled by RTC_WINE:MINE = 1) ❒ RTC_WINS:SEC(enabled by RTC_WINE:SECE = 1) ❒ RTC_WINS:SUBSEC(enabled by RTC_WINE:SUBSECE = 1)
Rootcause	Interrupt registers of RTC are not updated correctly in the transition from asynchronous (operation without clock) PSS state to synchronous (operation with clock) RUN state, interrupts get lost. Due to this problem, the state transition stops before reaching RUN state.
Workaround	For periodical wakeup: use SCT (Source Clock Timer) IRQ as PSS state wakeup trigger instead of RTC IRQ trigger (do not set RTC_WINE:*** = 1).
Fix Status	There is no plan to fix this limitation. SW workaround is available.

8. External Bus Hang-up	
Problem Definition	A problem was found in the External Bus Interface (EBI) on 32-bit FCR4 Cluster Series MCUs leading to system hang-up. According to the Hardware Manual (HWM), configuring the EBI SRAM/Flash controller for external SRAM, Flash or other peripherals does not require configuration of SDRAM controller. Because of this problem, not configuring the SDRAM controller before accessing the SRAM/Flash address space may result in system hang-up. This problem is called “External Bus Hang-Up Problem”.
Trigger Conditions	Problem occurs if all of the following conditions are met: ■ the SDRAM controller is not configured after reset has occurred ■ a register within SDRAM controller, not initialized by reset, settles to '1' after power up, indicating to the state machine that SDRAM controller is enabled ■ an access to the EBI SRAM/Flash address space is executed The uninitialized register within SDRAM controller may also settle to '0' after power up. In this case, the problem does not manifest. Implications: If this problem occurs, access to EBI SRAM/Flash address space results in AHB bus hang-up, causing system hang-up.
Rootcause	Uninitialized register within SDRAM controller, not initialized by reset, settles to '1' after power up and causing state machine hang-up.

Workaround	Execute the following code sequence before the main configuration of the External Bus Interface to disable the SDRAM controller reliably:
	`// Unlock EBI register interface for configuration`
	`EBI_UNLOCK = 0xEB1410CE;`
	`// Enable SDRAM controller`
	`EBI_SDMODCR_SDON = 1;`
	`// Data and Instruction Synchronization Barrier for immediate execution`
	`DSB();`
	`ISB();`
	`// Disable SDRAM controller`
	`EBI_SDMODCR_SDON = 0;`
	`// Lock EBI register interface after configuration`
	`EBI_UNLOCK = 0x10CE0EB1;`
	`// Data and Instruction Synchronization Barrier for immediate execution`
	`DSB();`
	`ISB();`

Fix Status	There is no plan to fix this limitation. SW workaround is available.

9. EEFlash Single Bit ECC Error	
Problem Definition	A problem was found in the ECC logic of EEFlash on 32-bit FCR4 Cluster Series MCUs. Because of this problem, the Single Bit ECC Error is not corrected. Double bit error detection is not effected i.e. will result in bus error response as specified. This problem is called “EEFlash Single Bit ECC Error Problem”.
Trigger Conditions	Problem occurs if all of the following conditions are met: ■ ECC check enabled (EEFCFG_ECR:ECCOFF = 0) ■ Read access to EEFLASH_ECC_MIR and accessing data with single bit ECC error The read data contains single bit ECC errors, even though they should have been corrected. Double bit error detection is not effected i.e. will result in bus error response as specified. Impact on Boot ROM behavior: ■ Single bit error behave like non-detectable multi-bit errors (> 2-bit errors) ■ EEFLASH Link Key corruption: EEFLASH not readable and no code execution possible (read/exec access will result in bus error response) ❒ EEFLASH Permission Key corruption: May prevent switching of permission sets ❒ EEFLASH Sector Permission corruption: Wrong sector permissions for read/write/exec may be set
Rootcause	Wrong state assignment of ECC-error corrected data to AHB bus protocol (corrected data is generated but output to bus at wrong timing).
Workaround	To detect single bit ECC error: Because the interrupt flag indicating a single bit ECC error (EEFCFG_SECIR:SECINT) is set regardless of the bug the application is still able to detect the occurrence of a single bit ECC error. The SW needs to handle the interrupt or check the EEFCFG_SECIR:SECIC flag) to detect, whether a read data word is wrong. To correct single bit ECC error, use the following sequence: 1. SuspendAllInterrupts() to avoid an interrupt interferes the protected sequence for ECC error injection 2. Repeat steps 3 to 5 for i = 0,...,38 to test which bit caused the single bit ECC error 3. If i < 32 Write unlock key to EEFCFG_CPR Write 2^i to Data Bit Error Injection Register (EEFCFG_DBEIR) Write unlock key to EEFCFG_CPR Write 0 to ECC Bit Error Injection Register (EEFCFG_EEIR) else Write unlock key to EEFCFG_CPR Write 0 to Data Bit Error Injection Register (EEFCFG_DBEIR) Write unlock key to EEFCFG_CPR write 2^(i-32) to ECC Bit Error Injection Register (EEFCFG_EEIR) 4. Read ECC Error Address 5. If no ECC error detected and i <32 corrected data is "data XOR (2^i)" 6. Clear ECC injection: Write unlock key to EEFCFG_CPR Write 0 to Data Bit Error Injection Register (EEFCFG_DBEIR) Write unlock key to EEFCFG_CPR Write 0 to ECC Bit Error Injection Register (EEFCFG_EEIR) 7. ResumeAllInterrupts();
Fix Status	There is no plan to fix this limitation. SW workaround is available.

10. EICU Capture Misoperation	
Problem Definition	A problem was found in the logic of the EICU on 32-bit FCR4 Cluster Series MCUs. Because of this problem, the behavior of the capture operation is not working as specified. This problem is called “EICU Capture Misoperation Problem”.
Trigger Conditions	Problem occurs if following condition is met: ■ Sampling is being armed by setting EICU0_CNFGR:OBSEN := 1 The sampling is started immediately and unconditionally (even though specified to be activated on event of selected and enabled external interrupt pin). The currently being sampled channel may switch to any other higher prioritized channel getting activated or current channel getting deactivated (even though specified that activated channel will be locked for whole sampling period).
Rootcause	Wrong types of inferred latches causing signal race condition between data/enable inputs of cell controlling clock request logic and channel priority decoder logic.
Workaround	Sampling can only be started immediately by setting EICU0_CNFGR:OBSEN := 1 (it cannot be armed prior to an EIC0_INTxx event). Sampling channel shall be always set to EIC0_INT00 (by setting EICU0_IRENR := 0x0000_0001) to prevent switching channel in sampling period. Sampling shall be started only with already active EIC0_INT00 event (by confirming EICU0_EIRR:ER0 = 1).
Fix Status	There is no plan to fix this limitation. SW workaround is available.

11. IRQ Unit Register Read Timing Issue	
Problem Definition	The IRQ Unit register read timing issue was found in the Interrupt Unit (i.e., IRQ-Unit or I-Unit) on the 32-bit FCR4 Cluster Series MCUs. Due to this problem, data from I-Unit registers may be invalid when read at CLK_MEM_I_PD3 frequencies higher than 64 MHz (even though CLK_MEM_I_PD3 maximum frequency is specified up to 128 MHz). The following are not affected by the timing issue: ■ Write accesses to Interrupt Unit ■ IRQ vector address transfer to CPU via Arm VIC port (if enabled)
Trigger Conditions	The problem may occur at the following conditions: ■ CLK_MEM_I_PD3 is set to more than 64 MHz, and ■ Data is read from I-Unit addresses (0xB0400000 - 0xB0400D57) or IRQ0_NMIVAS mirror register at address 0xFFFEFBFC Since occurrence of this timing issue is depending on logic path delays, the probability of reading invalid data is increasing with: ■ Higher temperature conditions than room temperature ■ Lower voltage conditions on VDD supply than nominal 1.2V ■ Wafer process slow conditions
Rootcause	The root cause for this problem is a misinterpretation of the internal specification document, which states that one wait cycle is inserted in AHB read transactions while reading of all registers of the interrupt controller module. In the RTL design, there is one additional wait cycle added on the AHB bus, but internally, there was just one pipeline register added to the register read paths. With this, the valid read data is captured after one clock cycle, and then simply delayed by another clock cycle. For creating the timing constraining of the interrupt controller module, it was incorrectly assumed that the register read data actually has two clock cycles 'time' until it is being captured (and then output to the AHB bus). This assumption then led to the incorrect introduction of a multicycle_path definition in the timing constraints file, which effectively causes a frequency relaxation of a factor of 2 for all register read accesses to interrupt controller registers.
Workaround	For workaround details, refer to “Workaround for IRQ Unit Register Read Timing Issue” on page 319.
Fix Status	There is no plan to fix this limitation. SW workaround is available.

12. IUNIT Interrupt Handling Problem	
Problem Definition	The IUNIT Interrupt Handling problem was found in the logic of the IUNIT on 32-bit FCR4 Cluster Series MCUs. Because of this problem, the IUNIT is not working as specified. ■ IRQ Priority Level Mask: If enabled IRQ[n] is selected by the priority encoder (no other interrupt with higher priority pending and IRQ0_IRQPLn < IRQ0_IRQPLM) and IRQ0_IRQPLM is changed to IRQ0_IRQPLM ≤ IRQ0_IRQPLn while the interrupt unit is waiting for the CPU to read the interrupt vector address, the interrupt hold status for IRQ[n] in IRQ0_IRQHSn is not set. ❒ If IRQ[n] is active and IRQ0_IRQPLM is set to IRQ0_IRQPLM > IRQ0_IRQPL[n] before the interrupt flag at the peripheral is cleared and no enabled interrupt with high priority was asserted then IRQ[n] will be selected again for interrupt service. ❒ If IRQ[n]/IRQ[m] is active and IRQ0_IRQPLM is set to IRQ0_IRQPLM > IRQ0_IRQPL[m] > IRQ0_IRQPL[n] after the interrupt flag at the peripheral asserting IRQ[n] is cleared and no enabled interrupt with higher priority was asserted, then IRQ[n] will be nested by IRQ[m]. ■ IRQ/NMI Priority Level: IRQ0_IRQPL0~127, IRQ0_NMIPL0~7 are changed during interrupt priority evaluation. ❒ Wrong IRQ/NMI interrupt number and vector (even the number and vector of a non-existing IRQ/NMI interrupt) can be handed over to the CPU. ❒ One IRQ/NMI interrupt is executed, but the hold status bit of another IRQ/NMI interrupt (or no hold status bit or several hold status bits) may get set. ■ IRQ/NMI Hold clear: IRQ0_IRQHC, IRQ0_NMIHC are written during interrupt priority evaluation. ❒ Wrong IRQ/NMI interrupt number and vector (even the number and vector of a non-existing IRQ/NMI interrupt) can be handed over to the CPU. ■ IRQ0_IRQHC byte write access: 8-bit (byte) width write access to IRQ0_IRQHC register triggers the hold clear of partly specified IRQ number.
Trigger Conditions	The problem occurs if: 1. Enabled IRQ[n] is selected for interrupt service (no other interrupt with higher priority pending and IRQ0_IRQPLn < IRQPLM) and IRQ0_IRQPLM is changed to equal or lower value than IRQ0_IRQPLn before IRQ0_IRQHS is set (point in time when CPU reads the interrupt vector address). 2. Priorities of active IRQ/NMI are changed during interrupt priority evaluation. 3. IRQ/NMI Hold Bit is cleared during interrupt priority evaluation. 4. IRQ0_IRQHC write access with 8-bit access width.
Rootcause	1. Not all inputs of priority encoder are latched during interrupt processing (period from start of priority evaluation until handover to CPU), in this case priority level mask IRQ0_IRQPLM. 2. Not all inputs of priority encoder are latched during interrupt processing (period from start of priority evaluation until handover to CPU), in this case priority level IRQ0_IRQPL0~127, resp. IRQ0_NMIPL0~7. 3. Not all inputs of priority encoder are latched during interrupt processing (period from start of priority evaluation until handover to CPU), in this case hold status IRQ0_IRQHS0~15 cleared by IRQ0_IRQHC, resp. IRQ0_NMIHS cleared by IRQ0_NMIHC. 4. Write strobes for the relevant 2 bytes of IRQ0_IRQHC are evaluated by OR instead of AND which causes byte write access effects change on full 16 Bit.
Workaround	Refer to "Workaround for IUNIT Interrupt Handling Problem" on page 326.
Fix Status	There is no plan to fix this limitation. SW workaround is available.

13. IUNIT Nesting Level Status Problem	
Problem Definition	The IUNIT Nesting Level Status Register problem was found in the logic of IUNIT on the 32-bit FCR4 Cluster Series MCUs. Because of this problem, the IUNIT Nesting Level Status Register (IRQ0_NESTL) is not working as specified.
Trigger Conditions	At least one of the following conditions must occur: ■ Handover of IRQ vector address to CPU (by VIC protocol) and clearing of IRQ Hold status (by CPU executing ISR) occurs in the same clock cycle ■ Handover of NMI vector address to CPU (by CPU reading the IRQ0_NMIVAS register) occurs one clock cycle before clearing of NMI Hold status (by CPU executing NMI handler).
Rootcause	IRQ0_NESTL:IRQNL: If handover of IRQ vector address to CPU (by VIC protocol) and clearing of IRQ Hold status (by CPU executing ISR) occurs in the same clock cycle, then IRQ0_NESTL:IRQNL is incremented (if it is =0) or decremented (if it is !=0), but its value should not be changed. IRQ0_NESTL:NMINL: If handover of NMI vector address to CPU (by CPU reading the IRQ0_NMIVAS register) occurs one clock cycle before clearing of NMI Hold status (by CPU executing NMI handler), then IRQ0_NESTL:NMINL is incremented (if it is =0) or decremented (if it is !=0), but its value should not be changed.
Workaround	Do not evaluate the value returned by reading IUNIT Nesting Level Status Register (IRQ0_NESTL). If software needs information about the current nesting level, a variable counter can be implemented which is incremented/decremented in the interrupt handler entry/exit code.
Fix Status	There is no plan to fix this limitation. SW workaround is available.

14.1.2V LVD VDP3 Supply Problem	
Problem Definition	The 1.2V Low Voltage Detection – VDP3 Supply problem was found on 32-bit FCR4 Cluster Series MCUs in the behavior of the 1.2V Low Voltage Detection (1.2V LVD, which is supervising the 1.2V core supply VDD) which is linked to the VDP3 supply voltage. Because of this problem, the 1.2V LVD may not output power-good even if VDD supply is above set limit of LVD. This may cause prevention of system startup after power-on and reset release and/or wrong 1.2V LVD behavior (Reset/Interrupt) at RUN and PSS mode.
Parameters Affected	All part numbers of the CY9DF126B series are affected.
Trigger Conditions	The problem may occur at the following conditions: ■ VDD is above set limits of 1.2V LVD (set by default to 0.8V lower limit at reset) ■ 1.2V LVD is enabled (enabled by default at reset) ■ VDP3 supply is smaller than 2.2V
Rootcause	The band-gap reference (BGR) of 1.2V LVD (supervising 1.2V core supply VDD) is connected to VDP3 supply. If VDP3 supply is <2.2V, then 1.2V LVD may not output power-good even if VDD supply is above set limit of LVD.
Workaround	Keep VDP3 supply ≥ 2.2V for correct operation of 1.2V LVD (at device startup and in RUN/PSS modes). If 1.2V LVD is disabled at: ■ RUN mode SYSC_RUNLVDCFGR. LVDE12 := 0, and ■ PSS mode: SYSC_PSSLVDCFGR.LVDE12 := 0, then VDP3 can be lower than 2.2V, but consider behavior as described in “3V IO Doman ESD Diode”.
Fix Status	Use CY9DF126C to fix this limitation or workaround is available for CY9DF126B.

15.Clock Supervisor Disable-Enable Problem	
Problem Definition	The Clock Supervisor Disable-Enable problem was found on 32-bit FCR4 Cluster Series MCUs in the behavior of the Clock Supervisor (CSV). Sporadically when re-enabling a CSV, a reset/NMI is triggered by the CSV even if the observed frequency is in the permitted range. This phenomenon can only happen, if the CSV had already been used since the last hard reset. Affected are all Clock Supervisor instances: ■ Main Oscillator CSV ■ Sub Oscillator CSV ■ Main PLL CSV ■ SSCG PLL CSV ■ GFX PLL CSV (GFX not available on CY9DF125, CY9DF126)
Trigger Conditions	The problem occurs if all of the following conditions are met: ■ The CSV had been running, then got disabled and is re-enabled again ■ The sequence above has not been interrupted by any hard reset The typical use case leading to the occurrence of the problem may be the supervising of clocks which are active in RUN state and switched off during power-save state (PSS). For example, Main Oscillator and Main PLL.
Rootcause	The CSV does not reset internal counters, when it is disabled. After re-enabling the CSV, it starts from the previous position and it is possible that it detects the observed frequency being out of range, although it is inside. Due to desired short reaction time, the error counters do not tolerate some additional margin at its start-up condition.
Workaround	■ Do not disable and re-enable the CSV ■ Trigger a hard reset before enabling a CSV that had already been enabled since the last hard reset. The hard reset will reset the CSV logic so that it can start its operation from known start conditions ■ When re-enabling a CSV, either with a RUN-to-RUN state transition or on wake-up (PSS-to-RUN), do not select the observed clock as source clock for any clock tree in the System Controller profile (SYSC_RUNCKSELR) or as watchdog clock (WDG_CFG_CLKSEL). As a result, only a CSV NMI might occur which can be handled by software. After such an NMI has occurred or a certain time after the state change has elapsed, the observed clock can be assigned to the desired clock trees in a further state transition.
Fix Status	There is no plan to fix this limitation. SW workaround is available.

16. SCT Compare Value Update Limitation	
Problem Definition	The SCT compare value update limitation problem was found in the Slow RC, RC, Main and Sub Source Clock Timer on 32-bit FCR4 Cluster Series MCUs. In case a new compare value SYSC_SRCSCTCPR_CMPR is captured triggered by writing '1' to SYSC_SRCSCTTRG_CGCPT it could happen that the Slow RC Source Clock Timer Counter is set to an arbitrary value. In case a new compare value SYSC_RCSCTCPR_CMPR is captured triggered by writing '1' to SYSC_RCSCTTRG_CGCPT it could happen that the RC Source Clock Timer Counter is set to an arbitrary value. In case a new compare value SYSC_MAINSCTCPR_CMPR is captured triggered by writing '1' to SYSC_MAINSCTTRG_CGCPT it could happen that the Main Source Clock Timer Counter is set to an arbitrary value. In case a new compare value SYSC_SUBSCTCPR_CMPR is captured triggered by writing '1' to SYSC_SUBSCTTRG_CGCPT it could happen that the Sub Source Clock Timer Counter is set to an arbitrary value.
Trigger Condition	Problem may occur for Slow RC Source Clock Timer if all of the following conditions are met: ■ SRC source clock timer runs with compare value "old value" ■ SYSC_SRCSCTCPR_CMPR is set to "new value" ■ SYSC_SRCSCTTRG_CGCPT set to '1' trigger compare value update ■ Bitwise AND of "new value" and "old value" is equal to 0 and neither "new value" nor "old value" equal to 0. By hard reset "old value" is initialized to 0x0001. Problem may occur for RC Source Clock Timer if all of the following conditions are met: ■ RC Source Clock Timer runs with compare value "old value" ■ SYSC_RCSCTCPR_CMPR is set to "new value" ■ SYSC_RCSCTTRG_CGCPT set to '1' trigger compare value update ■ Bitwise AND of "new value" and "old value" is equal to 0 and neither "new value" nor "old value" equal to 0. By hard reset "old value" is initialized to 0x001E. Problem may occur for Main Source Clock Timer if all of the following conditions are met: ■ Main Source Clock Timer runs with compare value "old value" ■ SYSC_MAINSCTCPR_CMPR is set to "new value" ■ SYSC_MAINSCTTRG_CGCPT set to '1' trigger compare value update ■ Bitwise AND of "new value" and "old value" is equal to 0 and neither "new value" nor "old value" equal to 0. By hard reset "old value" is initialized to 0x1000. Problem may occur for Sub Source Clock Timer if all of the following conditions are met: ■ Sub Source Clock Timer runs with compare value "old value" ■ SYSC_SUBSCTCPR_CMPR is set to "new value" ■ SYSC_SUBSCTTRG_CGCPT set to '1' trigger compare value update ■ Bitwise AND of "new value" and "old value" is equal to 0 and neither "new value" nor "old value" equal to 0. By hard reset "old value" is initialized to 0x0400.
Rootcause	The current implementation of the Source Clock Timer generates an asynchronous reset for the Source Clock Timer Counter in case the updated compare value is 0. This condition could be met for a short period of time when the compare value register in the Source Clock Timer captures the new compare value and generates a glitch at the reset of the counter registers. The width of this glitch does not guarantee a valid reset. As a result of this glitch, it is unpredictable which of the counter register bits is reset and which is not.
Workaround	For changing the compare value of a Source Clock timer from effective "old value" to a "new value", ensure the following conditions is true: "old value" & "new value" != 0
Fix Status	There is no plan to fix this limitation. SW workaround is available.

17. Flash Execution Limitation	
Problem Definition	The Flash Code Execution Limitation problem was found on 32-bit FCR4 Cluster Series MCUs. In case device is secured and code execution is done from following address areas in TCFlash: SA0/SA1: 0x00FF0000 - 0x00FF3FFF (TCM)/ 0x017F0000 - 0x017F3FFF (AXI) SB0/SB1: 0x00FE0000 - 0x00FE3FFF (TCM)/ 0x017E0000 - 0x017E3FFF (AXI) (not on CY9DF125) a prefetch abort exception occurs
Trigger Conditions	The problem occurs when device is secured and a code fetch is done from following addresses in TC Flash 0x00FF0000 - 0x00FF3FFF (TCM)/ 0x017F0000 - 0x017F3FFF (AXI) 0x00FE0000 - 0x00FE3FFF (TCM)/ 0x017E0000 - 0x017E3FFF (AXI) (not on CY9DF125)
Rootcause	The current implementation of the flash security for protecting code execution from address space reserved for Main SDR and TCFlash SDR uses for comparison of the access area the CPU address translated into flash address. As limits there are used the lowest and highest CPU address without reflecting the interleaved arrangement of the flash sectors. So data access for code fetch within in the address range FA=0x0000 to 0x20DF for TCFlash A and range FA=0x0000 to 0x209F for TCFlash B is rejected and leads to prefetch abort exception. Code fetch is done 64Bit aligned therefore always a Flash address from sector 0 is used for comparison. Due to the interleaved arrangement of sector 0, sector 1 in the CPU address space this prevents to use sector 1 for code execution too.

Interleaved arrangement of Flash sectors in CPU Address Map

TCM Address	AXI Address	Flash Sectors	
…			
0x00FF3FFF 0x00FF01C0	0x017F3FFF 0x017F01C0	SA1	SA0
0x00FF01BF 0x00FF0000	0x017F01BF 0x017F0000	SDR	SDR
…			
0x00FE3FFF 0x00FF0140	0x017E3FFF 0x017E0140	SB1	SB0
0x00FE013F 0x00FE0000	0x017E013F 0x017E0000	SDR	SDR
…			

Sequential arrangement of the sectors in the flash

FA	TCFlash A
…	
0x3FFF 0x20E0	SA1
0x20DF 0x2000	SDR
0x1FFF 0x00E0	SA0
0x00DF 0x0000	SDR

FA	TCFlash B
…	
0x3FFF 0x20A0	SB1
0x209F 0x2000	SDR
0x1FFF 0x00A0	SB0
0x009F 0x0000	SDR

Rootcause (Cont.)	Example TCFlash macro A: 0x017F0000 - 0x017F01BF (AXI) shall be non-executable if device is secured. The address comparison is done after translation to sequential flash addresses: 0x017F0000 --> 0x0000 0x017F01BF --> 0x20DF Any code fetch (after translation) from flash address 0x0000 - 0x20DF will be prohibited, which effectively covers 0x0000 - 0x3FFF area since code fetches are always done with 64-bit width. A correct implementation would need to compare the access with two areas: 0x0000 - 0x00DF and 0x2000 - 0x20DF
Workaround	None, but read accesses are not prohibited, hence the affected regions can be used for constants.
Fix Status	There is no plan to fix this limitation.

18. RTC Configuration Synchronization Problem	
Problem Definition	The RTC Configuration Synchronization problem was found in synchronization architecture of the RTC on 32-bit FCR4 Cluster Series MCUs. In the case of two consecutive write accesses to RTC_WTCR register, it could happen that the values UPCAL, SCAL[2:0], ENUP, ACAL are synchronized as random values into the CLK_MAIN clock domain or cannot be changed inside CLK_MAIN clock domain until next hard reset occurrence. In the case of two consecutive write accesses to RTC_WTCR register it could happen that the values RCKSEL[1:0], CSM are synchronized as random value into the RTC clock domain or cannot be changed inside RTC clock domain until next hard reset occurrence. That UPCAL, SCAL[2:0], ENUP, ACAL, RCKSEL[1:0], CSM cannot be changed in CLK_MAIN or RTC clock domain cannot be identified by reading back RTC_WTCR.
Trigger Conditions	The problem could occur if the following conditions are met: Two write accesses to RTC_WTCR are performed within less than 10 times the period of slowest clock out of CLK_MAIN, previous and new CLK_S_RTC and CLK_CFG_PD1 in between.
Figure 28. RTC Timer Module Diagram	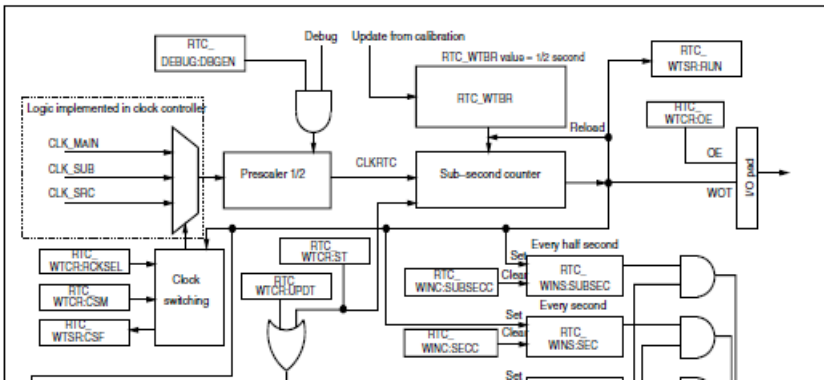
Cause of Failure	The synchronization of the random data for UPCAL, SCAL[2:0], ENUP, ACAL into the CLK_MAIN clock domain is caused if the data sampled in CLK_CFG_PD1 domain changes at sampling by CLK_MAIN. The synchronization of the random data for RCKSEL[1:0], CSM into the rtc clock domain is caused if the data sampled in CLK_CFG_PD1 domain changes at sampling by CLK_S_RTC. The locking of UPCAL, SCAL[2:0], ENUP, ACAL inside CLK_MAIN clock domain until hard reset occurrence is caused if the second write access occurs during handshake of synchronization flag. The locking of RCKSEL[1:0], CSM inside rtc clock domain until hard reset occurrence is caused if the second write access occurs during handshake of synchronization flag. The waveform in Figure 29 shows the principle of handshake interference which causes a deadlock.

18. RTC Configuration Synchronization Problem (Continued)

Figure 29. Handshake Synchronization

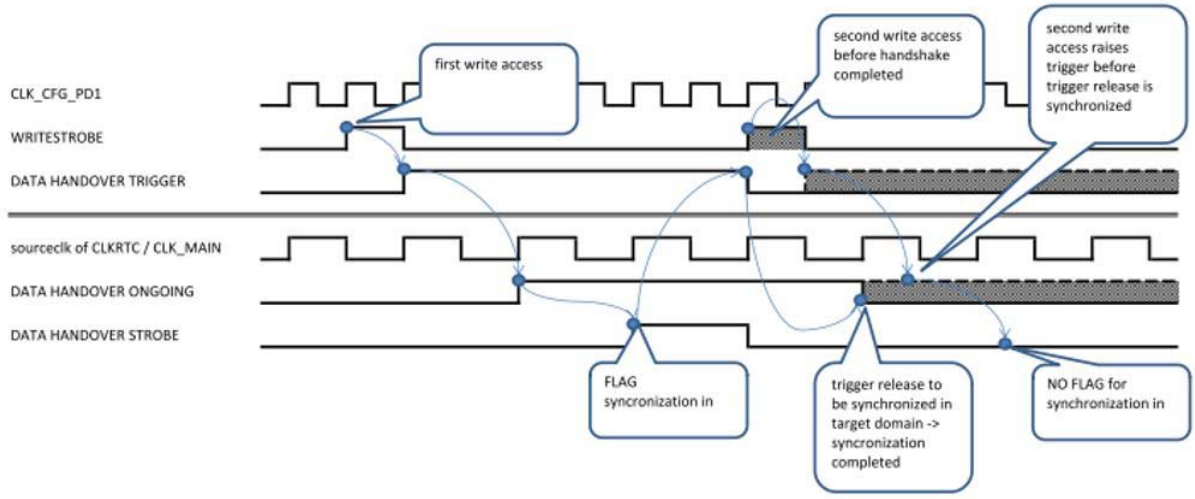

Workaround	■ Ensure that after write accesses to RTC_WTCR there is no write to RTC_WTCR for 10 times the period of slowest clock out of CLK_MAIN, previous and new CLK_S_RTC and CLK_CFG_PD1. 1. Write RTC_WTCR 2. Read RTC_WTCR to ensure that first write has arrived at RTC due to CPU store buffer. 3. Wait 10 times the period of slowest clock out of CLK_MAIN, previous and new CLK_S_RTC and CLK_CFG_PD1 before next write access to RTC_WTCR.
Fix Status	There is no plan to fix this limitation. SW workaround is available.

19. PSS Wakeup Problem	
Problem Definition	The PSS Wakeup problem was found at wakeup from Power Saving State (PSS) on 32-bit FCR4 Cluster Series MCUs. At wakeup from PSS, an unexpected Non-Maskable Interrupt (NMI) will appear if the PSS profile settings meet certain conditions.

Problem Conditions	The problem will occur if the following conditions are met:
	The device is in PSS state and receives a wakeup event
	AND the RC oscillator is OFF in PSS state (`SYSC_PSSCKSRER:RCOSCEN=0`)
	AND the Low Voltage Detection (LVD) threshold settings differ between RUN and PSS profile
	(
	`(SYSC_RUNLVDCFGR:SV12[2:0] != SYSC_PSSLVDCFGR:SV12[2:0])`
	`OR (SYSC_RUNLVDCFGR:SV33[2:0] != SYSC_PSSLVDCFGR:SV33[2:0])`
	`OR (SYSC_RUNLVDCFGR:SV50[2:0] != SYSC_PSSLVDCFGR:SV50[2:0])`
	)

Rootcause	Before the transition from RUN to PSS state, the PSS profile is checked for validity. If the PSS profile is not valid, `SYSC_SYSSTSR:IPPAPSS` would be set and a transition to PSS would not be possible. When the profile was good and the device has entered the PSS state, following happens after a wakeup event: 1. The fast RC oscillator is started (in case it was OFF in PSS). 2. An unintended PSS profile check is executed, caused by a logic bug. 3. The RUN profile is checked normally as described in hardware manual.

Figure 28. PSS to RUN State Switching

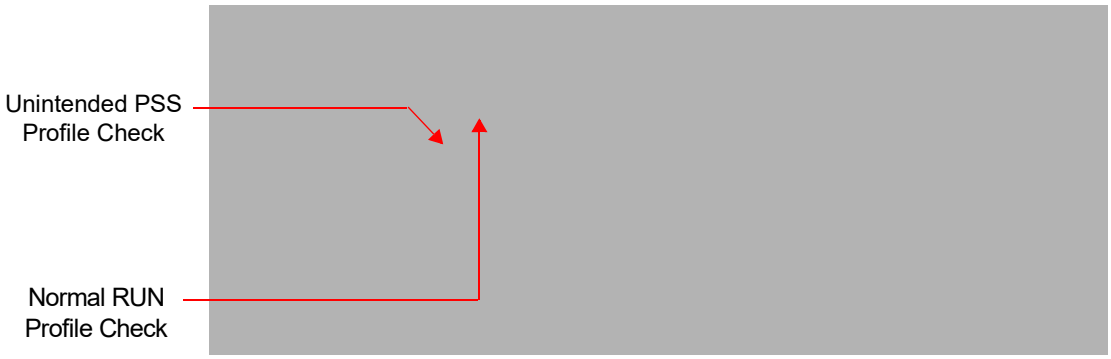

Reference: Hardware Manual FCR4-Cluster-MN707-00001-1v2-E.pdf section “2.3.2.6 PSS to RUN State Switching”, page 294

Generally, the unintended PSS profile check has no effect because of the PSS profile was already checked at the preceding RUN to PSS transition. However, at startup, the following invalid PSS profile setting rule builds an exception:

- An LVD is switched on (i.e. the LVD is off in APP profile and on in PSS profile) or an LVD threshold is changed (i.e. the LVD threshold differs between APP and PSS profiles) when the RC oscillator is disabled in the PSS profile. This check is necessary to make sure the RC clock is available for the stabilization time of the LVD

Reference: FCR4 Cluster Series Hardware Manual (002-09388)

After wakeup, the APP profile of LVD already holds the settings for RUN state. Now, the mentioned rule compares the LVD threshold settings (APP differ from PSS?), and if the RC oscillator is disabled in PSS, the rule is fulfilled, the PSS profile error flag `SYSC_SYSERRR:PSSERRIF` is set and NMI is triggered.

19. PSS Wakeup Problem (Continued)	
Workaround	Do not use the combination of settings mentioned in the above Problem Conditions. If the mentioned combination of settings was applied, execute and handle this particular NMI exception by ignoring it once after every wake-up.
Fix Status	There is no plan to fix this limitation.

20. 3V IO Doman ESD Diode	
Problem Definition	The 3V IO domain ESD diode problem was found in the specific use-case of switching off the VDP3 supply (3V IO domain) on 32-bit FCR4 Cluster Series MCUs. Due to an ESD diode between VDD (core supply) and VDP3 (3V IO domain supply), the voltage on VDP3 does not reach 0V even if not supplied. External components connected to same supply as VDP3 will be supplied with a voltage around 0.55V from VDD supply. Therefore, power saving target in standby modes may not be achieved.
Parameters Affected	All part numbers of the CY9DF126B series are affected.
Trigger Conditions	The problem occurs if the supply of the 3V IO domain (VDP3) is switched off.
Rootcause	There is an ESD diode between VDD and VDP3 in the core supply cell to protect VDD against ESD overvoltage. 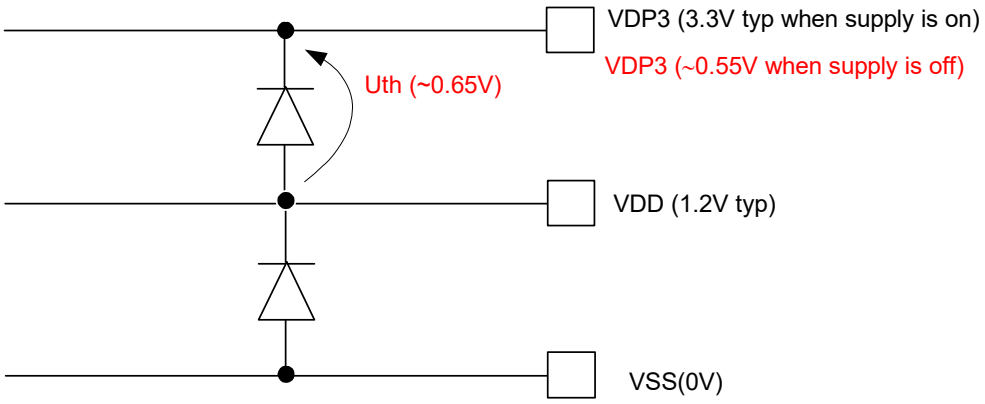 In case VDP3 supply is switched off, then VDP3 is supplied by VDD - Uth (threshold voltage of diode) which is around 1.2V - 0.65V = 0.55V.
Workaround	Choose any one of the following workaround: 1. Keep 3V power on in standby modes, or 2. Switch 3V power off in standby modes, and use separated supplies of MCU and external components to avoid external components being supplied via ESD diode, or 3. Switch 3V power off in standby modes, and use same supply of MCU and external components, but do not exceed the maximum current limit of forward-biased diode which is 4mA, i.e. current on VDP3 must not exceed 4mA in that case.
Fix Status	Use CY9DF126C to fix this limitation or HW workaround is available for CY9DF126B.

21. Undefined Port Pin State while Core Supply (VDD) is Unavailable	
Problem Definition	This functional limitation is possibly undefined port pin (Pi_jj) states while the 1.2V core supply VDD is unavailable with 32-bit FCR4 family microcontrollers. From assertion of VDP3 or VDP5 until VDD is within the recommended operating conditions the port pin (Pi_jj) states maybe undefined.
Details of the Limitation	Refer to "Limitation for Undefined Port Pin State while Core Supply (VDD) is Unavailable" on page 330.
Workaround	It is necessary to analyze the application design to identify the impact of the undefined behavior of the port pins during the power-up phase, i.e., in the time between VDP3/VDP5 is powered until VDD is powered. In case the application allows that VDP3/VDP5 is powered and VDD is not powered for a longer time, this must also be analyzed.
Fix Status	Future devices will not have this limitation.

Ordering Information

Table 96 lists the CY9DF126 series key package features and ordering codes.

Table 96. Ordering Information

Part Number	Package	Remarks
CY9DF126BPMC-GSE2	176-pin plastic LQFP LQP-176	Lead-free package
CY9DF126CPMC-GSE2	176-pin plastic LQFP LQP-176	Lead-free package

Appendix

Workaround for Flash Erase Suspend Issue

To avoid this limitation, the following workaround by software is recommended.

After the flash sector erase suspend operation (issue of the suspend command + verification of DQ6/TOGG1 bit) is finished, check the hardware sequence flag DQ4 bit indicating the specific internal state which can read flash or not (see Figure 29).

If the value of DQ4 bit is “1”, then issue the sector erase resume command and restart the sector erase suspend operation after the waiting time.

Figure 29. Workaround by Software

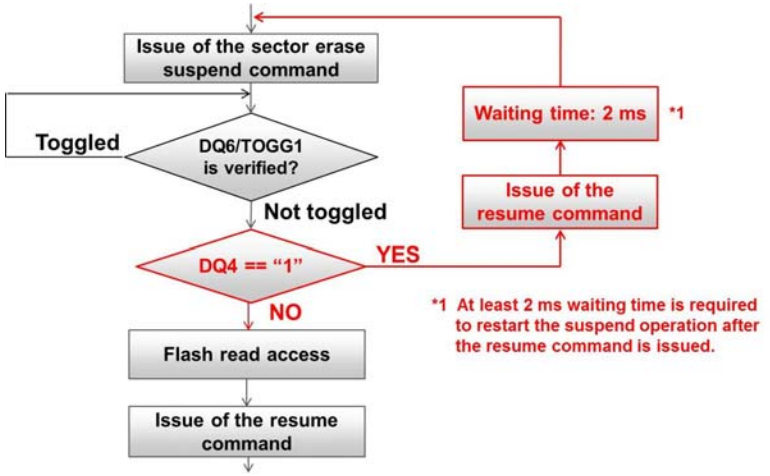

Please note the following factors of internal circuit when using the software workaround:

- At least 2 ms waiting time is required to restart the sector erase suspend operation after the resume command is issued by DQ4 = "1" (see *1 in Figure 29).
- Approximately a maximum of 10 ms would be required for DQ4 to become “0” after the suspend command is issued first.

Though DQ4 is an undefined bit on the hardware manual, it can be used to read the internal sequence state. If DQ4 = 0, it indicates the internal state allowing data read/instruction fetch from flash. But if DQ4 = 1, internal circuit have not changed to the state allowing data read/instruction fetch. See the following table and figure representing bit assignment of DQ4 bit for FCR4 family and FR5 family, respectively. See Table 97 and figure representing bit assignment of DQ4 bit for FCR4 family and FR5 family, respectively.

Table 97. Bit Assignment of Hardware Sequence Flags (Cypress Cortex R4 Family)

Read Data Bit No.	7	6	5	4	3	2	1	0
Hardware Sequence Flag	DQ7	DQ6	DQ5	DQ4	DQ3	DQ2	-	-
Read Data Bit No.	15	14	13	12	11	10	9	8
Hardware Sequence Flag	DQ15	DQ14	DQ13	-	DQ11	DQ10	-	-

Workaround for TCFlash TCM Access

General code location:

Use instruction fetch and data access from TCFlash only over AXI port. It is recommended to exclusively use TCFLASH AXI interface addresses in the linker directives (start address 0x01000000).

Application entry address:

- Default application entry
- Alternative boot vector (ABV)

Default Application Entry

In case the Alternative Boot Vector (ABV) in the Boot Description Record (BDR_ABV) is not used (or invalid during interrupted flash update), the Boot ROM will jump to the default application entry address at 0x00800000, which is the first address in TCFLASH TCM interface address space. Due to the above described functional limitation, a jump instruction must be placed at this address to directly jump into TCFLASH AXI address space.

Figure 30 shows the definition of required linker section, jump instruction (LDR) and literal definition with 32-bit start address (ADDRESS_START_LABEL) in the assembly start-up file, based on an example assembly code for Greenhills Multi toolchain.

The 8-byte section (.DEFAULT_APPLICATION_START) must be placed by linker directive to TCFLASH address 0x01000000 (which is the same physical flash address 0x00800000 from TCM interface address space). Figure 31 shows the corresponding linker directive file.

Alternative Boot Vector (ABV)

In addition to the jump instruction at default application entry the Alternative Boot Vector in the Boot Description Record (located in TCFLASH) can be used. This record is read and evaluated by Boot ROM before jumping into the user application.

Figure 30 shows the definition of required linker section with 32-bit start address BDR_ABVM (_start) and ABV Enable Marker BDR_ABVEM (0x292d3a7b), based on an example assembly code for Greenhills Multi toolchain.

The 8-byte section (.BDR_ALTERNATIVE_BOOT_VECTOR) must be placed by linker directive to TCFLASH address 0x017FFFF8 (location of Boot Description Record). Figure 31 shows the corresponding linker directive file.

Figure 30. Definition of BDR_ABV and Default Application Entry (Example for Greenhills Multi Toolchain, File crt0.arm)

```
 .section ".BDR_ALTERNATIVE_BOOT_VECTOR", "a"

_bdr_abv:
        DCD _start ;* Alternative Boot Vector *
        DCD 0x292d3a7b ;* Alternative Boot Vector Enable Marker *

;*********************************************************************
;* 7  Start-up Code                                                  *
;*********************************************************************
        .section ".DEFAULT_APPLICATION_START", "ax"
        .force_nothumb

_def_appl_start: ;* Default application entry (in case BDR_ABV is not used) *
        LDR PC,ADDRESS_START_LABEL ;* Jump to AXI start of flash *

ADDRESS_START_LABEL:
        DCD _start

        .section ".BOOTSTART", "ax"
        .text
        .force_nothumb

_start:

        [...]
```

Figure 31. Linker Directive File for Default and Alternative Boot Vector Section Mapping (Example for Greenhills Multi Toolchain, File Standalone_tcflash_axi.ld)

```
 MEMORY
{
    [...]
    bdr_abv       : ORIGIN = 0x017FFFF8, LENGTH = 0x000008
    // alternative boot vector
    def_appl_start: ORIGIN = 0x01000000, LENGTH = 0x000008
    // = 0x00800000 TCFLASH TCM interface (default application start)
    tcflash_axi   : ORIGIN = 0x01000008, LENGTH = 0x1FFFF8
    // reserve 8 byte in flash for def. appl. start (0x00800000...0x00800007)
    [...]
}

SECTIONS
{
    .BOOTSTART                                ALIGN(16) : > tcflash_axi
    [...]                                               : > .
    .DEFAULT_APPLICATION_START                          : > def_appl_start
    .BDR_ALTERNATIVE_BOOT_VECTOR                        : > bdr_abv
    [...]
}
```

Note

It is strongly recommended to implement both definitions for user application start address i.e. default and alternative vector. In case of updating the whole application or parts of it, it can be ensured to always have valid application/boot loader code located on at least one of those two entry addresses.

Workaround for TCFlash AXI Access

The Arm® Cortex®-R4 Memory Protection Unit (MPU) must be used to already block accesses to the reserved TCFlash AXI address space in the CPU. The resulting error responses will occur at the right time and are handled correctly by the CPU.

Figure 32. Example of MPU Configuration

```
; ============================== ARM MPU configuration ================================
;
; Core accesses to the reserved Flash area (0x01200000 - 0x017DFFFF = 6016 kB)
; must be prevented. Two overlapping MPU regions are required to achieve this:
;
;
; Region 11:
;        1 MB     1 MB     1 MB     1 MB     1 MB     1 MB     1 MB     1 MB
;     |vvvvvvvv|vvvvvvvv|--------|--------|--------|--------|--------|vvvvvvvv|
;0x01000000                                                                0x017FFFFF
;
;                                                                      8*128 kB
; Region 10:                                                          |-------v|
;                                                          0x01700000        0x017FFFFF
;
;
; Resulting:
;     |vvvvvvvv|vvvvvvvv|--------|--------|--------|--------|--------|-------v|
;0x01000000             0x011FFFFF                                0x017E0000 0x017FFFFF
;
; <"User regions may be placed here">
;
; Background Region  0x00000000 <~~~     ARM default memory map    ~~~> 0xFFFFFFFF
;
; Legend:
;  'vvvvvvvv': Subregion disabled (Region 11) 'v': "Subregion disabled" (Region 10)
;  '--------': "No access" (Region 11)        '-': "No access" (Region 10)
;
; If application switches to non-privileged User mode, further regions must be
; setup because Background Regions is not effective in User mode and hence an
; MPU fault would be raised immediately because code execution is not possible.
; -------------------------------------------------------------------------------

        ; Disable MPU
        MRC   p15, 0, r0, c1, c0, 0
        AND   r0, r0, #0xfffffffe
        MCR   p15, 0, r0, c1, c0, 0

        ; Select MPU region 11 for configuration
        MOV   r0, #11
```

```
        MCR   p15, 0, r0, c6, c2, 0
        ; Set region base address
        MOV   r0, #0x01000000
        MCR   p15, 0, r0, c6, c1, 0
        ; Set region size, sub-regions and enable
        MOV   r0,     #0x00008300 ; Sub-Region 7,1,0 (1MB) disabled,
        ORR   r0, r0, #0x0000002d ; 8 MB Region size (0x0080000) & enabled
        MCR   p15, 0, r0, c6, c1, 2
        ; Set region access control
        MOV   r0, #0x00000000 ; No access
        MCR   p15, 0, r0, c6, c1, 4
; Select MPU region 10 for configuration
        MOV   r0, #10
        MCR   p15, 0, r0, c6, c2, 0
        ; Set region base address
        MOV   r0, #0x01700000
        MCR   p15, 0, r0, c6, c1, 0
        ; Set region size, sub-regions and enable
        MOV   r0,     #0x00008000 ; Sub-Region 7 (128KB) disabled,
        ORR   r0, r0, #0x00000027 ; 1 MB Region size (0x0010000) & enabled
        MCR   p15, 0, r0, c6, c1, 2
        ; Set region access control
        MOV   r0, #0x00000000 ; No access
        MCR   p15, 0, r0, c6, c1, 4
        ;---
        ;
        ; < User specific configuration for regions 0-9 may be added here,
        ;   region disabling below must be adapted accordingly then        >
        ;
        ;---
        ; According to ARM architecure reference, the reset value of MPU region registers
        ; (and others) is undefined. Therefore, it is ensured that all other regions
        ; are disabled
        ;---
        ; Loop through MPU regions 0 - 9 for configuration
        MOV   r0, #0x00000000
        MOV   r1, #0
        ; Select region
mpu_disable_loop:
        MCR   p15, 0, r1, c6, c2, 0
        ; Disable region
        MCR   p15, 0, r0, c6, c1, 2
        ADD   r1, r1, #1
        CMP   r1, #10
        BNE   mpu_disable_loop
        ;---
        ; Enable ARM default background region and MPU
        MRC   p15, 0, r0, c1, c0, 0
        ORR   r0, r0, #0x00020000
        ORR   r0, r0, #0x00000001
        MCR   p15, 0, r0, c1, c0, 0
        ; Execute data and instruction synchronization barrier, so that afterwards
        ; the new CP15 settings can become effective
        DSB
        ISB
        NOP
        NOP
; ================================================================================
```

Workaround for External Bus Hang-Up

Execute the following code sequence before the main configuration of the External Bus Interface to disable the SDRAM controller reliably.

```
// Unlock EBI register interface for configuration
EBI_UNLOCK = 0xEB1410CE;
// Enable SDRAM controller
EBI_SDMODCR_SDON = 1;
// Data and Instruction Synchronization Barrier for immediate execution
DSB();
ISB();
// Disable SDRAM controller
EBI_SDMODCR_SDON = 0;
// Lock EBI register interface after configuration
EBI_UNLOCK = 0x10CE0EB1;
// Data and Instruction Synchronization Barrier for immediate execution
DSB();
ISB();
```

Workaround for EEFlash Single Bit ECC Error

To detect single bit ECC error:

Because the interrupt flag indicating a single bit ECC error (EEFCFG_SECIR:SECINT) is set regardless of the bug the application is still able to detect the occurrence of a single bit ECC error. The SW needs to handle the interrupt or check the EEFCFG_SECIR:SECIC flag) to detect, whether a read data word is wrong.

To correct single bit ECC error, use the following sequence:

1. SuspendAllInterrupts() to avoid an interrupt interferes the protected sequence for ECC error injection
2. Repeat steps 3)-5) for i = 0,...,38 to test which bit caused the single bit ECC error
3. If i < 32
   Write unlock key to EEFCFG_CPR
   Write 2^i to Data Bit Error Injection Register (EEFCFG_DBEIR)
   Write unlock key to EEFCFG_CPR
   Write 0 to ECC Bit Error Injection Register (EEFCFG_EEIR)
   else
   Write unlock key to EEFCFG_CPR
   Write 0 to Data Bit Error Injection Register (EEFCFG_DBEIR)
   Write unlock key to EEFCFG_CPR
   write 2^(i-32) to ECC Bit Error Injection Register (EEFCFG_EEIR)
4. Read ECC Error Address
5. If no ECC error detected and i <32 corrected data is "data XOR (2^i)"
6. Clear ECC injection:
   Write unlock key to EEFCFG_CPR
   Write 0 to Data Bit Error Injection Register (EEFCFG_DBEIR)
   Write unlock key to EEFCFG_CPR
   Write 0 to ECC Bit Error Injection Register (EEFCFG_EEIR)
7. ResumeAllInterrupts();

Workaround for IRQ Unit Register Read Timing Issue

General Considerations

It is assumed that for normal operation of the MCU and most use cases it is not necessary to read back any I-Unit registers, i.e. the application software e.g. knows which vector addresses are configured, which priorities are set, and which IRQ channels are enabled.

Furthermore, it is assumed that for IRQ handling the application enables the Arm VIC port which is not affected by the read timing issue.

It is not necessary to poll the I-Unit lock status bit (IRQ0_CSR_LST) after unlocking/locking the I-Unit. This bit does not indicate any I-Unit internal time consuming operations. Its purpose is to inform the application about the current lock state so that exceptions caused by double unlocking or locking can be avoided. This can also be implemented with software means (e.g. semaphore).

For debugging during development or error logging purposes, it may be useful to read certain status registers from the I-Unit (e.g. IRQ0_IRQST, IRQ0_EAN) which still can be done but it must be regarded that the gathered information may not be reliable.

Considering above mentioned assumptions, the only functionality that is affected by the read timing issue is the NMI handling. FCR4 MCUs by default use the Arm "high exception vectors" option with exception vector table located at address 0xFFFF0000. This area is implemented as ROM and its contents are not changeable. The instruction placed at the FIQ exception vector (**Note** FIQ and NMI are used synonymously throughout the document) will read from the NMIVAS mirror register at address 0xFFFEFBFC to retrieve the branch target. Due to the read timing issue, the target address is not reliable and the read must be prevented.

Following two workarounds exist to overcome this situation and still provide NMI functionality:

- Workaround #1: Using Memory Protection Unit -> preventing the read from NMIVAS mirror
- Workaround #2: Using Arm "low exception vector" option -> allowing to replace the instruction at FIQ exception vector

All described preparatory steps in these workarounds (for example, MPU configuration) must be completed before application enables NMIs (clearing of 'F'-bit in CPU Current Program Status Register).

If these workarounds are used, it is also not necessary to initialize the NMI specific I-Unit registers (NMI priorities, NMI vectors).

Software samples are provided to demonstrate both workarounds:

- Workaround #1: fcr4_nmi_mpu_mbxxxxx-vxx
- Workaround #2: fcr4_nmi_low_exception_mbxxxxx-vxx

Workaround #1 (MPU)

Overview

This workaround aims to detect the read access to the IRQ0_NMIVAS mirror register from the instruction at the FIQ exception vector. The NMIVAS mirror register is located at address 0xFFFEFBFC which will be secured by a memory protection region supported by the Arm core MPU.

The flowchart below introduces the process of the workaround when the application code is interrupted by an NMI event.

Figure 33. Workaround #1 Software Flow

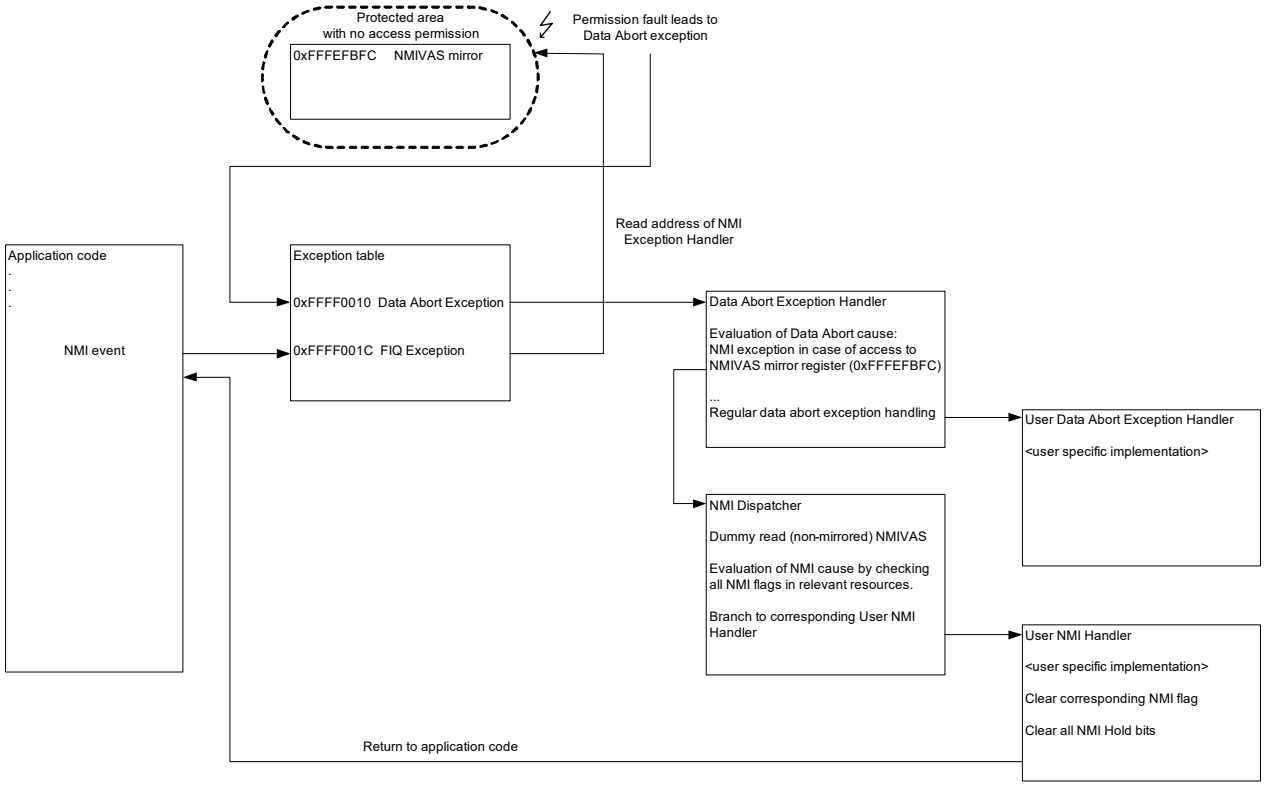

Problem Description

1. Each non-maskable interrupt will cause an FIQ exception and the instruction at address 0xFFFF001C is executed. The instruction reads the vector for the NMI exception handler. This vector is determined by the I-Unit and made available via NMIVAS register and because of the specified hardware fault in the I-Unit cannot be read reliably.
   To prevent a branch to a corrupted NMI vector address, the access to NMIVAS mirror register at address 0xFFFEFBFC must be protected by an Arm MPU region.
2. When the FIQ exception instruction accesses the NMIVAS mirror register, a Data Abort exception will occur because of the MPU protection.
3. After the Data Abort handler is entered, the Data Fault Status Register (DFSR) and Data Fault Address Register (DFAR) which are located in System Control coprocessor and the CPU Link Register (R14) are evaluated to determine whether the Data Abort was caused by the occurrence of an NMI.
   Conditions for NMI cause:
   - Data Fault Status Register
     DFSR[10,3:0] = 0b01101 (Permission Fault)
     DFSR[11] = 0 (read access)
   - Data Fault Address Register
     DFAR = 0xFFFEFBFC (NMIVAS mirror register)
   - Link Register R14_abt = 0xFFFF0024 shows that an NMI caused the abort (0xFFFF001C + 0x8)

   Before evaluation starts, all CPU registers modified by the code are pushed on Data Abort stack (R13_abt).
4. There are two cases depending on this evaluation result:
   a. In case not all conditions are true, the Data Abort was not caused by the occurrence of an NMI.

      The modified registers are restored from the stack and the Data Abort handler branches to the user's Data Abort handler ("branch without link" -> Link Register is not modified). This behavior is transparent for the user's Data Abort handler which can be written assuming that the handler is directly executed from a Data Abort exception.

b. In case all conditions are true, the Data Abort was caused by the occurrence of an NMI.

   Data Fault Status and Data Fault Address register are explicitly cleared to prevent a repetitive NMI handling in case an NMI occurred shortly after a "normal" Data Abort. After that, the modified registers are restored from the stack and the CPU mode is changed from "Abort" to "FIQ".

   The program continues at NMI Dispatcher function where a dummy read to the NMIVAS register is done, because this read has the I-Unit internal effect of deasserting the nFIQ CPU signal and setting the NMI Hold bit of the NMI which has won I-Unit priority decision.

   Finally, the NMI cause must be evaluated. This is done by checking all NMI flags in the corresponding peripheral resources (availability may vary for different FCR4 derivates). As it is not possible to reliably read the I-Unit ECC Double Bit Error NMI flag (IRQ0_EEI_EENS), the software must assume that this is the NMI cause in case no other NMI is present. Once the NMI cause has been detected, the software can branch to the user's NMI handler. Before doing the "branch without link", the stack and registers should be restored (if used by NMI Dispatcher), as the user handler will directly return to the program location where the NMI occurred.

5. The user NMI handler must be changed as described in “Changes to User NMI Handler” on page 324. It will directly return to the application code.

Arm MPU Configuration

The MPU is a part of Cortex-R4 MCU and can be configured via System Control Coprocessor. It controls the accesses to defined memory regions with the configuration of permission rights.

For protection of NMIVAS mirror register, this function will be used as follows.

The setup of MPU is done by defining:

- Region number
- Region access permissions
- Region size and enable setting
- Region base address

The region number with the highest priority ('11') must be chosen.

The access permission must be set to 'No Access' in User and in Privileged Mode.

The region size (bit 5..1) is set to minimum size (32 byte) which will not influence any other used memory area. Bit 0 enables the configured MPU setup.

It must be ensured that the region base address is 32 byte aligned and the NMIVAS mirror address is within the given region size.

In addition, two more settings in the System Control Register (also located in System Control Coprocessor) must be done for activating the MPU function:

- M (bit 0) = 1: MPU enable
- BR (bit 17) = 1: MPU background region enable

Refer to the Arm Cortex-R4 Technical Reference Manual and the provided software sample for information on how to configure and enable the MPU.

Configuration Sequence

The following configuration sequence for this workaround is recommended:

1. Reset (High Exception Vectors active, FIQ/NMI masked, IRQ masked).
2. Configure MPU to prohibit access to NMIVAS mirror register.
3. Enable NMI processing in CPU (clear 'F'-bit in CPSR register).
4. Configure IRQ vector table, priority levels and channel enable status in I-Unit.
5. Enable VIC port (to enable IRQ processing via not-affected VIC port).
6. Enable IRQ processing in I-Unit (IRQ0_CSR_IRQEN).
7. Enable IRQ processing in CPU (clear 'I'-bit in CPSR register).

Workaround Limitations

The following limitations need to be considered, if this workaround is used:

- NMI dispatcher and all called NMI handlers must not allow NMI nesting.

  If NMIs would be re-enabled (clearing of 'F'-bit in CPU Current Program Status Register), another NMI exception could occur. In case the NMI flag of the already handled NMI is evaluated again by the new/nested NMI Dispatcher function, the same handler will be called again. Further error scenarios are imaginable which can also result in some inconsistent state.

- Return from a "normal" Data or Prefetch Abort may not be possible.

  It can happen that while a “normal” Data or Prefetch Abort handler is currently executed, an NMI occurs because they are not masked on Abort exception entry. As a consequence, this NMI will lead to another Data Abort exception that overwrites the original SPSR_abt and R14_abt CPU register values, and the Fault Status Registers in the System Control Coprocessor. This makes it impossible for the user's Data or Prefetch Abort handler to return to application or correctly evaluate the circumstances (for example, program location and processor state) of the original Abort.

  Basically, a similar behavior can occur on any Armv7-R architecture if another precise Abort occurs while an Abort handler is executed.

Workaround #2 (Low Exception)

Overview

The application needs to set up an exception table at the “low exception table” location at address 0x0 (inside TCMRAM) and afterwards make this the active table. With this solution, the instruction at the FIQ exception vector can be chosen arbitrarily and the read to NMIVAS register is avoided.

Problem Description

Preconditions

For the implementation shown in the software samples, the linker settings of the application must ensure that 64 bytes starting from address 0x0 are reserved for the low exception table and corresponding handler addresses (address area 0x00 - 0x3F).

Exception Table Setup

The exception table in Armv7-R architecture is defined as provided in Table 98.

Table 98. Armv7-R Exception Table

Offset to Table Base (0x0 or 0xFFFF0000)	Exception Type
0x00	Reset
0x04	Undefined Instruction
0x08	Supervisor Call / (Software Interrupt)
0x0C	Prefetch Abort
0x10	Data Abort
0x14	Reserved
0x18	IRQ (if VIC port disabled)
0x1C	FIQ

Typically, a LDR PC, [PC, #+/-<imm>] instruction is placed at each of these exception vectors which will do a 32-bit read at a PC-relative location and move this value to the PC (= branch to this address). In Arm terminology, the data that is read are called “literals”. These literals are the addresses of the corresponding exception handler functions.

In the sample software, the exception table and literals are setup as provided in Table 99.

Table 99. Exception Table Setup in Sample Software

Absolute Address	Content
0x00	don't care (on reset high exception table is getting active anyway)
0x04	LDR PC, [PC, #+0x18]
0x08	LDR PC, [PC, #+0x18]
0x0C	LDR PC, [PC, #+0x18]
0x10	LDR PC, [PC, #+0x18]
0x14	don't care
0x18	LDR PC, [PC, #+0x18]
0x1C	LDR PC, [PC, #+0x18]
0x20	don't care
0x24	Address of Undefined Instruction handler
0x28	Address of Supervisor Call handler
0x2C	Address of Prefetch Abort handler
0x30	Address of Data Abort handler
0x34	don't care
0x38	Address of IRQ handler (in case VIC port disabled)
0x3C	Address of special NMI dispatcher function (see"Problem Description of NMI Dispatcher" on page 323)

The offset value in the LDR PC, [PC, #+0x18] instruction regards the fact that in Armv7-R architecture, the PC always points to the address of the currently executed instruction + 0x8→ 0x18 + 0x8 = 0x20 offset between instruction and corresponding literal.

MPU protection of low exception table (optional)

Especially when considering the probability of immature software using uninitialized NULL pointers, it is recommended to protect the low exception table and related literals against accidental write accesses by setting up a read-only MPU region for that address area.

Refer to the Arm Cortex-R4 Technical Reference Manual and the provided software sample for information on how to configure and enable the MPU.

Switching the active exception table

To make the low exception table active, the 'V' bit (bit 13) in the System Control Register of the System Control Coprocessor must be cleared.

Problem Description of NMI Dispatcher

The same NMI Dispatcher as for Workaround #1 is also used for Workaround #2.

This function executes a dummy read to the NMIVAS register, because this read has the I-Unit internal effect of deasserting the nFIQ CPU signal and setting the NMI Hold bit of the NMI which has won I-Unit priority decision. Finally, the NMI cause must be evaluated. This is done by checking all NMI flags in the corresponding peripheral resources (availability may vary for different FCR4 derivates). As it is not possible to reliably read the I-Unit ECC Double Bit Error NMI flag (IRQ0_EEI_EENS), the software must assume that this is the NMI cause in case no other NMI is present. Once the NMI cause has been detected, the software can branch to the user's NMI handler. Before doing the "branch without link", the stack and registers should be restored (if used by NMI Dispatcher), as the user handler will directly return to the program location where the NMI occurred.

The user NMI handler must be changed as described in "Changes to User NMI Handler" on page 324.

Configuration Sequence

The following configuration sequence for this workaround is recommended:

1. Reset (High Exception Vectors active, FIQ/NMI masked, IRQ masked).
2. Create Low Exception Vector table at 0x00000000.
3. Configure MPU to protect exception vector table in TCMRAM.
4. Switch to Low Exception Vector table.
5. Enable NMI processing in CPU (clear 'F'-bit in CPSR register).
6. Configure IRQ vector table, priority levels, and channel enable status in I-Unit.
7. Enable VIC port (to enable IRQ processing via not-affected VIC port).
8. Enable IRQ processing in I-Unit (IRQ0_CSR_IRQEN).
9. Enable IRQ processing in CPU (clear 'I'-bit in CPSR register).

Workaround Limitations

Following limitations need to be considered, if this workaround is used:

■ NMI dispatcher and all called NMI handlers must not allow NMI nesting.

If NMIs would be re-enabled (clearing of 'F'-bit in CPU Current Program Status Register), another NMI exception could occur. In case the NMI flag of the already handled NMI is evaluated again by the new/nested NMI Dispatcher function, the same handler will be called again. Further error scenarios are imaginable which can also result in some inconsistent state.

Changes to User NMI Handler

The limitation and workarounds covered by this document result in necessary changes to the user NMI handlers.

A different NMI handler exit code is required for correct operation. Instead of only clearing the corresponding NMI Hold bit, all NMI Hold bits must be cleared (as currently set Hold Bit cannot be read back from I-Unit).

If this is not done, a problem can occur in case of multiple pending NMIs. The software NMI dispatcher may have evaluated a different “winning” NMI than the I-Unit hardware logic (in case of multiple pending NMIs), because it uses the resource NMI flags to determine pending NMIs. Consequently, the NMI Hold bit would not be cleared by the user NMI handler and this prevents the I-Unit from asserting the nFIQ signal to CPU again for this still pending and not yet handled NMI.

Ordering of NMI Flag Evaluation

In the event of an NMI, no information can be read from the I-Unit, hence the NMI flag(s) of all resources that can generate NMIs need to be evaluated.

Following order of NMI flag evaluation is used in the provided software samples:

1. Low voltage detection NMI
2. System controller error NMI
3. External NMI pin
4. Watchdog NMI
5. Timing Protection Unit NMI
6. MPU DMA Access Violation NMI
7. MPU IRIS Access Violation NMI (if available)
8. MPU MLB0 Access Violation NMI (if available)
9. Bus Error Collection Unit BECU0 Access Violation (Peripheral group 0)
10. Bus Error Collection Unit BECU1 Access Violation (Peripheral group 1)
11. Bus Error Collection Unit BECU3 Access Violation (Peripheral group 3)
12. Iris Signature Unit NMI (if available)
13. MPU SHE Access violation (if available)
14. IRQ Double Error NMI

The order may be re-arranged to decrease NMI latency for certain use cases, except "IRQ Double Error NMI", which must remain on last position as it must be determined by exclusion principle.

Writing I-Unit Registers

Care must be taken when writing code for the initialization of I-Unit registers.

Any code that would result in RMW (Read-Modify-Write) accesses must be avoided. RMW accesses may be generated if register bit field types are used for assigning values.

Example:

If priority level for IRQ channel 2 shall be set to 19:

C-Code: IRQ0_IRQPL0_IRQPL2 = 19; **(wrong!)**

Compiler Output: 32-bit read of IRQ0_IRQPL0 register

Modify bits belonging to IRQPL2 bit field

32-bit write of IRQ0_IRQPL0 register

Because the read of this RMW access is affected by the limitation described in this Customer Information, a possibility that other priority levels in the same register are getting corrupted exists.

Workaround for IUNIT Interrupt Handling Problem

1. To change the IRQ Priority Level Mask Register (IRQ0_IRQPLM), use the following workaround:
   a. Safe sequence to change IRQ0_PLM (temporarily disable interrupt processing and perform wait until IUNIT idle)

```
SuspendAllInterrupts();       // globally disable all IRQs with
// 'I'-bit in CPU CPSR
IRQ0_UNLOCK = <unlock-key>;
IRQ0_CSR = 0;                 // setting IRQEN bit to '0'
IRQ0_CSR;                     // dummy read to generate wait cycles
// until state machine has returned to
// idle state
IRQ0_IRQPLM = <new PLM value>;
IRQ0_CSR = 1;                 // setting IRQEN bit to '1'
IRQ0_UNLOCK = <lock-key>;
ResumeAllInterrupts();        // restore previous state of 'I'-
      // bit in CPU CPSR
```

   b. Extension for each ISR entry code (check if corresponding IRQ0_IRQPL[n] < current IRQ0_IRQPLM)

```
Pseudocode:

__interrupt void Interrupt_1_Handler(void)
{
    // Check if priority of current IRQ is higher (means lower value)
    // than the currently active priority level mask
        if (Interrupt_1_Prio < Current_PLM_Value)
      {
        // The interrupt is "valid" and corresponding code
// shall be executed
        // Call user callback function, which is also responsible
// for clearing the interrupt flag in the peripheral
        ....
      }

      // Clear Hold-Bit of Interrupt_1
      ...
}
```

   IMPORTANT:

   "Interrupt_1_Prio" must be determined indirectly by the called ISR and OS/application internal interrupt priority configuration variable(s).

   IRQ0_IRQPL0~127 and IRQ0_IRQST:IRQSN must not be read. (see "Workaround for IRQ Unit Register Read Timing Issue" on page 319)

   Current_PLM_value must be read from OS/application internal buffer variable IRQ0_IRQPLM must not be read.

   (see Workaround for IRQ Unit Register Read Timing Issue).

2. To avoid changing the priority level of an active IRQ interrupt, configure IRQ0_IRQPL0~127 only in initial phase before enabling interrupts by setting IRQ0_CSR.IRQEN=1.

   With the software workaround explained in Workaround for IRQ Unit Register Read Timing Issue, it is not necessary to change IRQ0_NMIPL0~7.

3. IRQ Hold Clear - use following sequence to clear the bit:

```
IRQ0_UNLOCK = <unlock-key>
IRQ0_CSR = 0; // setting IRQEN bit to '0'
IRQ0_CSR; // dummy read to generate wait cycles
// until IRQ is latched in IUNIT, resp.
// state machine returned to idle state
IRQ0_IRQHC = <IRQ-Nr>// clear Hold-bit of IRQ
IRQ0_CSR = 1; // setting IRQEN bit to '1'
IRQ0_UNLOCK = <lock-key>
```

   NMI Hold Clear - use following workaround:

   NMI handling shall be implemented according to workarounds in “Workaround for IRQ Unit Register Read Timing Issue” on page 319 (will not use any potential wrong NMI register values, as reading is prohibited anyway).

4. Perform write access to IRQ0_IRQHC only with 16-bit or 32-bit access width.

Rootcause for APIX VDDA Current Problem

Uninitialized FF (flipflop) are generating forbidden states on differential clock buffer:

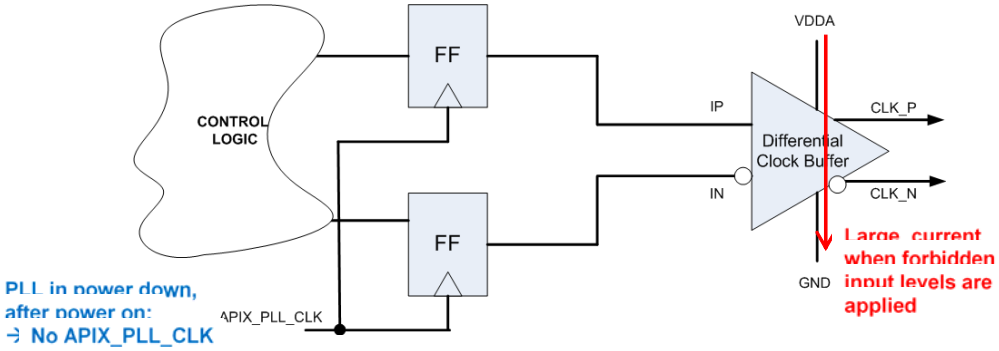

IP	IN	RootCause 1	RootCause 2
Low	Low	Forbidden, forces DC current path in differential clock buffer	Forbidden, forces DC current path in differential clock buffer
Low	High	Functional	Functional
High	Low	Functional	Functional
High	High	Forbidden, but no DC current path	Forbidden, forces DC current path in differential clock buffer

Critical circuit as shown above is present 2x for root cause 1 and 1x for root cause 2.

Explanation of different current values on VDDA:

- FF settings after power on are random and depends basically on mismatch of transistors
- FF setting is forcing all combinations of current values in differential clock buffers
- Current is depending on process corner, temperature and VDDA
- Current worst case: LT, fast corner, VDDA=1.3V

Process Corner: Typ VDDA=1.2V					
	Root Cause1	Root Cause 2		Leakage APIX Macro	Worst IDDQ on VDDA
Amount of IDDQ critical circuits	2	1			
FF Setting	00	00	11		
25 degree	1760 uA	193 uA	**214 uA**	5 uA	**3739 uA**

Process Corner: FF VDDA=1.3V					
	Root Cause1	Root Cause 2		Leakage APIX Macro	Worst IDDQ on VDDA
Amount of IDDQ critical circuits	2	1			
FF Setting	00	00	11		
-40 degree	2712 uA	338uA	**357uA**	5 uA	**5804 uA**
25 degree	2479 uA	315uA	**335 uA**	5 uA	**5298 uA**
125 degree	2300 uA	312uA	**333 uA**	200uA	**5133 uA**
150 degree	2095 uA	**311uA**	309uA	250uA	**4751 uA**

Reliability Check - Electro migration

- Simulated the APIX macro by using the forbidden states of root cause 1 and 2
- Applied conditions for simulation:
  - Temperature: 150 degree (worst case for metal aging)
  - VDDA: 1.3V
  - Corner: FF
- Result of electro migration check:
  - **Under these conditions, there is NO electro migration reliability problem for these two critical circuits across a assumed life time of 100,000h**

Workaround for APIX VDDA Current Problem

- FF has to be initialized by enabling APIX PLL for a short time period (1ms)
- FF will be forced in functional state
- That workaround will be save and can be guaranteed for all samples (checked during fabrication as well)
- Requirements for workaround:
  - VDEA and VDEA_VCO have to be supplied
  - RREF=2k4 is needed for PLL bias current
  - Software has to enable PLL for a short time period (1 ms)

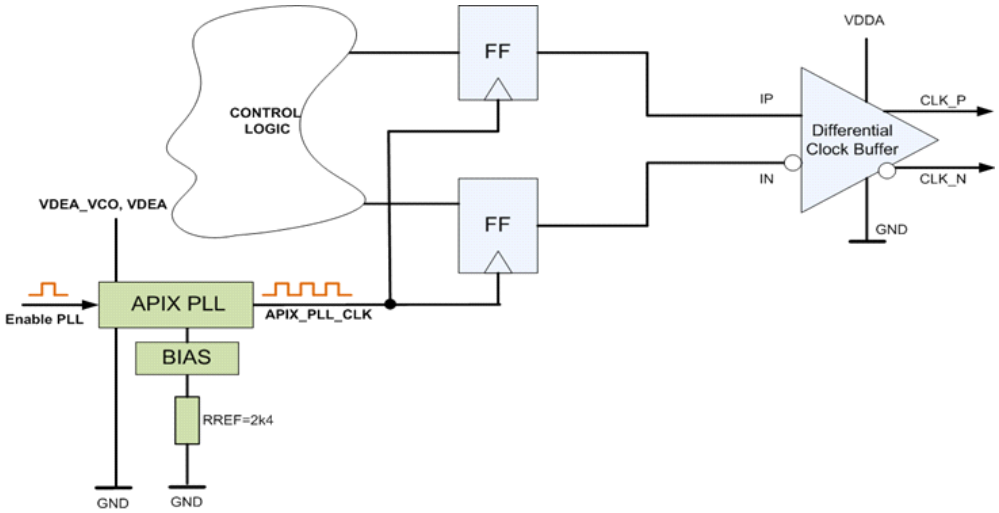

Example program:

```
// enable APIX PHY clock
ARH0_APCFG00 |= 0x80000000; // set bit 31(PHY Global power down) to power up

// delay (minimum 1ms)

// disable APIX PHY clock;
 ARH0_APCFG00 &= 0x7FFFFFFF; // set bit 31(PHY Global power down) to power down
```

Limitation for Undefined Port Pin State while Core Supply (VDD) is Unavailable

When the port pins (Pi_jj) are powered (i.e. depending on the IO Pin type, VDP3 or VDP5 is applied) and the core supply voltage VDD is out of the recommended operating conditions, then two issues occur:

1. The port pins (Pi_jj) may drive any state, i.e., they may show any of the following states high/low, pull-up, pull-down or high-Z instead of the intended state high-Z.
2. The states of the analogue switches to connect the Stepper Motor Controller (SMC) port pins to the A/D converter may be undefined. Several switches may be in the conducting state at once and create connections between the SMC port pins. Depending on the voltage levels on the SMC port pins internal currents may flow.

This is described in more detail in the next two sections.

Undefined Port Pin State

As can be seen in Figure 34, port pins Pi_jj in VDP3 and VDP5 power domain may enter undefined state while the 1.2V core supply VDD is below the recommended operating conditions.

As an example, the figure shows a system in which a VDP5 power drop is starting at T0.

At T_1 an external supply voltage monitor asserts RSTX. This switches the port pins Pi_jj to high-Z state.

At T_2, VDP3, which was also decreasing, is out of recommended operating conditions. The port pins Pi_jj should stay in the high-Z state down to a lower VDP3 voltage. However, as they are operated outside recommended operating conditions, this is shown as X.

At T_3, VDP5 is out of recommended operating conditions. The port pins Pi_jj should stay in the high-Z state down to a lower VDP5 voltage. However, as they are operated outside recommended operating conditions, this is shown as X.

Figure 34. Undefined Port Pin Pi_jj State while VDP3/VDP5 is Powered, but VDD is Not

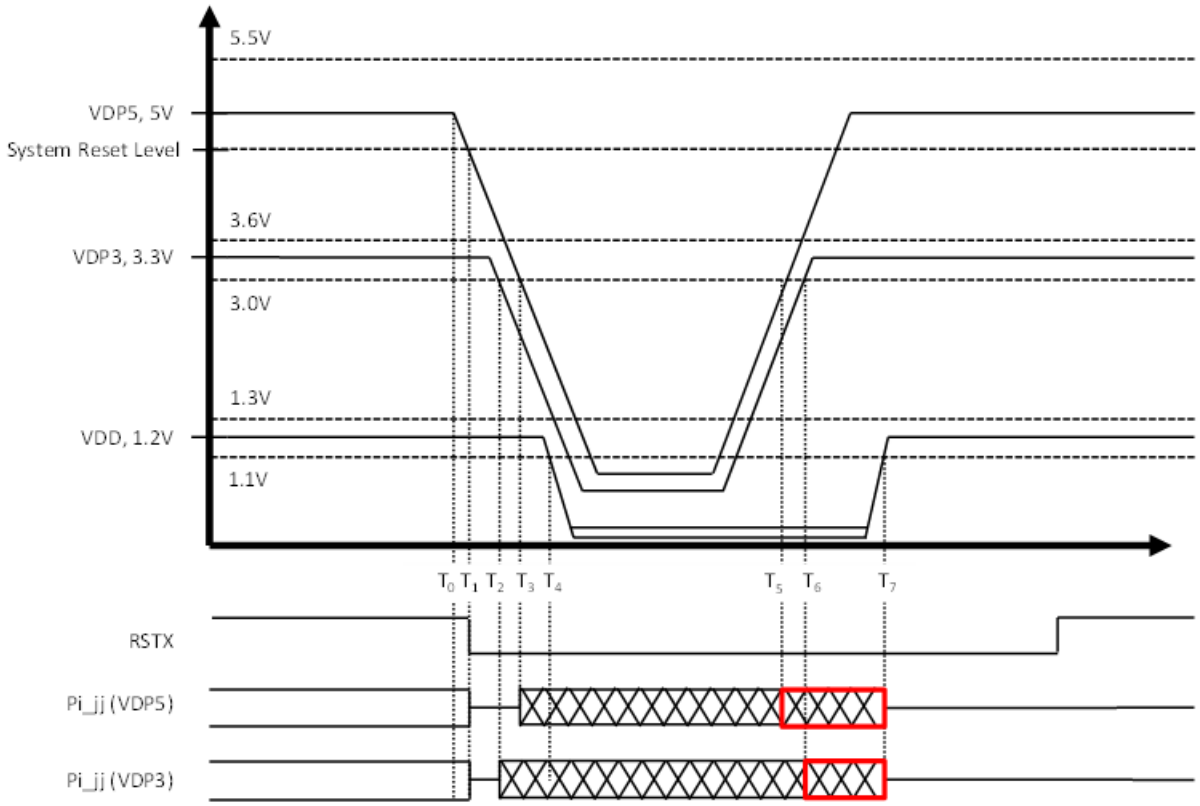

Thereafter, also VDD is decreasing, being below the recommended operating conditions at T_4. If VDD is reaching a critical low value, the port pins Pi_jj enter undefined state. When VDP3 and VDP5 are rising again, the port pins Pi_jj remain in undefined state. At T_5 VDP5 is back in recommended operating conditions and at T_6 VDP3 is also back. Even though RSTX is still asserted, the port pins Pi_jj show the undefined state instead of the intended high-Z state. This failure case is indicated by the red rectangles.

Only when at T_7 VDD has reached a certain level (in this example: minimum value of recommended operating conditions) they are switched back to high-Z state caused by the still asserted RSTX.

Changed Behaviour of Fixed Devices in Boundary Scan Test in User Mode

Fixed devices behave differently in boundary scan test as described in following. If boundary scan test is enabled in user mode using a sequence of JTAG commands, then driving RSTX pin low during the boundary scan will force all output device pins to go to High-Z state. This also applies to the JTAG_TDO pin. Previously no output pin state change would have occurred.

Behavior of the boundary scan test if enabled through the board test mode (MODE pin = '1') is not affected by the fix.

Multiple Analogue Switches of the SMC Port Pins in Conducting State

When the port pins Pi_jj enter undefined state as described above, also the states of the analogue switches to connect the Stepper Motor Controller (SMC) port pins to the A/D converter may be undefined. Other A/D converter switches than the ones of the SMC IOs are not affected. As the state is undefined, several switches of the SMC port pins may be in the conducting state at once and create chip internal connections between the SMC port pins. Depending on the voltage levels on the SMC port pins, internal currents may flow.

Figure 35. Current Flowing between SMC Pins of Different State Because of Multiple Analog Switches are in Conducting State

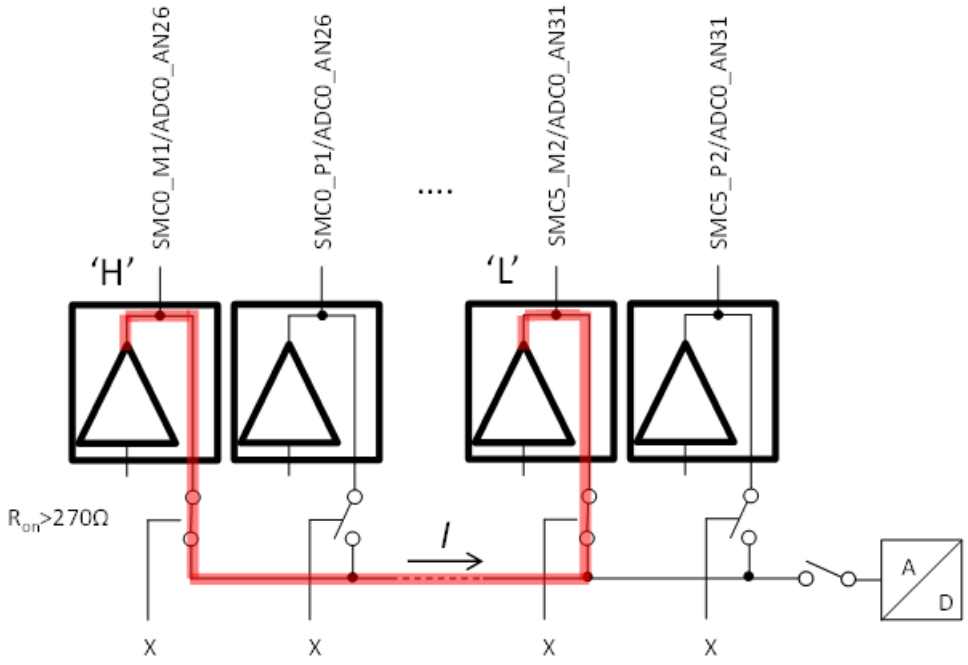

The minimum resistance of the internal switches when closed is RON = 270?.

Depending on the state of the connected pins, a current / may flow.

The maximum number of SMC output drivers is 6 channels x 4 output drivers / SMC channel = 24.

The two worst case scenarios creating the maximum currents are as follows:

i. Worst case for one switch: One SMC output buffer is driving against all others, i.e. one SMC output driver is driving 'H', all others are driving 'L' or vice versa and all analogue switches are in conducting state.

   In this case, the maximum current flowing through the switch of the one SMC output buffer driving against all others is:

$$I_{MAX} = \frac{VDP5_{MAX}}{R_{ON} + \frac{1}{23}R_{ON}} = \frac{5.5V}{270\Omega + \frac{1}{23}270\Omega} = 19.5mA$$

This current is still in the allowable limits for short times (some ten milliseconds) but will destroy the switches in case it is flowing for longer time as the current flowing through a single switch (10mA) is exceeding the allowable sustained current of 1mA.

The maximum total current of 120mA, respectively the total power consumption P = 120mA x 5.5V = 660mW is adding to the total power consumption PTOT. Make sure the total power consumption PTOT(max) = 2000mW at T_A = 105°C is not exceeded.

However, as in the failure case VDD is below spec and RSTX is active, all clocks are stopped, and the current consumption of the microcontroller is expected to be low.

Document History Page

Spansion Document Number: DS707-00005-4v1-E

Version	Date	Description of Change
0.01	2010-08-12	Initial draft
0.02	2010-08-24	Updated according to latest short spec
0.03	2011-01-27	Updated Overview, Memory Map, Package and Pin Assignment, Interrupt/ DMA chapter with relavent information. Removed Recommended settings chapter.
0.04	2011-02-01	Updated Electrical characteristics chapter and modfied the document footer.
0.05	2011-02-04	Updated Block diagram with CRC, Overview, Table 2-1, Table 3-2, Table 4-1, Table 4-3, Table 6-1, Table 6-3, Figure 6-3, Table 6-4, Table 6-5, Table 6-9, Table 6-11, Table 6-14, Figure 6-8. Renamed Pnn_m to Pi_jj.
0.06	2011-02-15	Updated Document code. Updated Figure 3-2, Table 3-1, and Section 3.3.2
0.07	2011-03-10	Updated QFP-296 diagram, QFP-296 Package pinout table, Pin circuit type of QFP-296, I/O circuit types.
1.00	2011-03-18	Updated IO_MAP.
1.01	2011-03-31	Updated Table 6-5 with PLL information and modified Table2-2.
1.02	2011-04-06	Updated Section I/O Pins and their functions and I/O Pin Types.
1.03	2011-05-04	Added RICFG information in Section 3.2.2. Added Procudures chapter. Renamed EEFLASH in Memory and Config(MEMORY_CONFIG)AHB Bus Memory Map
1.04	2011-05-13	Renamed APIX power supply pins in QFP-296 Package diagram and QFP-296 Package pinout table.
1.05	2011-05-27	Added Section Master ID.
1.06	2012-05-04	Added Input Level Description and Drive Strenght Information. Corrected IO circuit diagrams, ID value and reference supply in DC characrteristics. Added current consumption values
1.07	2012-07-02	Added handling devices, ordering information, flash programming times.
1.08	2012-07-10	Added RC Oscillator Frequency, modified Characteristics to match evaluation results. DMA channel registers limited to 8.
2.0	2012-08-21	No longer preliminary revision
2.1	2012-12-13	Trademark note added, Support note removed, package information updated, std version for Warning, back cover changed, boundary scan chapter updated, new HSSPI timing, ADC reference values
2.2	2013-02-08	Corrected TC-Flash ID in table 2-14: List of Module ID Updated IO circuit type JTAGO and SDIN/SDOUT/RREF in table 3-3 Changed item name of table 4-3 Modules with DMA Corrected reset value of PPC_PCFGR040 ~ PPC_PCFGR123 in table 5-6 memory layout for the PERI0_RBUS registers Updated pin, condition, value and remarks of DC characteristics in table 6-3 Extended 7.1 Boundary Scan chapter. Updated 8.4 Power on sequence Added 8.5 Pin State while Power-On-Reset Added CY9DF126BPMC-GSE2 to 9.Ordering Information
2.3	2013-06-19	Specified APIX leakage current of ICCPSS in table 6-3 Changed condition of ICCPSS for PD2 and PD3 in table 6-3
2.4	2013-06-28	Corrected condition of ICCPSS for PD2 and PD3 in table 6-3 back to version 2v1
3.0	2013-07-01	Added figure 3-2: Package Dimensions QFP-296 Corrected order information in chapter 9. by updating partnumber for QFP-296 variant and removing unnecessary "*1" marks from part number
4.0	2014-01-31	corrected number of MPU channels from 8 to 12, corrected name of QFP176 package pin 127 from VSS5 to VSS, extented remark for PD1 run mode current, removed precondition from flash program/erase cycle and data retention time, corrected HTM trace sources with ID2, corrected partnumber for QFP-296, added CY9DF126C
4.1	2015-10-28	Updated electrical specifications per PCN: 2901. DC Characteristics, Power supply current in PSS mode DC Characteristics, Power supply current in Timer mode In addition, updated document from Fujitsu look and feel to Cypress. Cosmetic changes only.

Document History

Document Title: CY9DF126 - Atlas, CY9DF126 Series Document Number: 002-09314				
Revision	**ECN**	**Orig. of Change**	**Submission Date**	**Description of Change**
**	–	–	08/12/2010	0.01 Rev: Initial draft.
			08/24/2010	0.02 Rev: Updated according to latest short spec.
			01/27/2011	0.03 Rev: Updated Overview, Memory Map, Package and Pin Assignment, Interrupt/ DMA chapter with relavent information. Removed Recommended settings chapter.
			02/01/2011	0.04 Rev: Updated Electrical characteristics chapter and modfied the document footer.
			02/04/2011	0.05 Rev: Updated Block diagram with CRC, Overview, Table 2-1, Table 3-2, Table 4-1, Table 4-3, Table 6-1, Table 6-3, Figure 6-3, Table 6-4, Table 6-5, Table 6-9, Table 6-11, Table 6-14, Figure 6-8. Renamed Pnn_m to Pi_jj.
			02/15/2011	0.06 Rev: Updated Document code. Updated Figure 3-2, Table 3-1, and Section 3.3.2.
			03/10/2011	0.07 Rev: Updated QFP-296 diagram, QFP-296 Package pinout table, Pin circuit type of QFP-296, I/O circuit types.
			03/18/2011	1.00 Rev: Updated IO_MAP.
			03/31/2011	1.01 Rev: Updated Table 6-5 with PLL information and modified Table2-2.
			04/06/2011	1.02 Rev: Updated Section I/O Pins and their functions and I/O Pin Types.
			05/04/2011	1.03 Rev: Added RICFG information in Section 3.2.2. Added Procudures chapter. Renamed EEFLASH in Memory and Config(MEMORY_CONFIG)AHB Bus Memory Map.
			05/13/2011	1.04 Rev: Renamed APIX power supply pins in QFP-296 Package diagram and QFP-296 Package pinout table.
			05/27/2011	1.05 Rev: Added Section Master ID.
			05/04/2012	1.06 Rev: Added Input Level Description and Drive Strenght Information. Corrected IO circuit diagrams, ID value and reference supply in DC characrteristics. Added current consumption values.
			07/02/2012	1.07 Rev: Added handling devices, ordering information, flash programming times.
			07/10/2012	1.08 Rev: Added RC Oscillator Frequency, modified Characteristics to match evaluation results. DMA channel registers limited to 8.
			08/21/2012	2.0 Rev: No longer preliminary revision.
			12/13/2012	2.1 Rev: Trademark note added, Support note removed, package information updated, std version for Warning, back cover changed, boundary scan chapter updated, new HSSPI timing, ADC reference values.
			02/08/2013	2.2 Rev: Corrected TC-Flash ID in table 2-14: List of Module ID. Updated IO circuit type JTAGO and SDIN/SDOUT/RREF in table 3-3. Changed item name of table 4-3 Modules with DMA. Corrected reset value of PPC_PCFGR040 ~ PPC_PCFGR123 in table 5-6 memory layout for the PERI0_RBUS registers. Updated pin, condition, value and remarks of DC characteristics in table 6-3. Extended 7.1 Boundary Scan chapter. Updated 8.4 Power on sequence. Added 8.5 Pin State while Power-On-Reset. Added CY9DF126BPMC-GSE2 to 9.Ordering Information.
			06/28/2013	2.3 Rev: Specified APIX leakage current of ICCPSS in table 6-3. Changed condition of ICCPSS for PD2 and PD3 in table 6-3.
			07/01/2013	2.4 Rev: Corrected condition of ICCPSS for PD2 and PD3 in table 6-3 back to version 2v1
			01/31/2014	3.0 Rev: Added figure 3-2: Package Dimensions QFP-296. Corrected order information in chapter 9. by updating partnumber for QFP-296 variant and removing unnecessary "*1" marks from part number.

Document Title: CY9DF126 - Atlas, CY9DF126 Series Document Number: 002-09314				
** (Cont.)	–	–	10/28/2015	4.0 Rev: Corrected number of MPU channels from 8 to 12, corrected name of QFP176 package pin 127 from VSS5 to VSS, extented remark for PD1 run mode current, removed precondition from flash program/erase cycle and data retention time, corrected HTM trace sources with ID2, corrected partnumber for QFP-296, added CY9DF126C.
				4.1 Rev: Updated electrical specifications per PCN: 2901. DC Characteristics, Power supply current in PSS mode. DC Characteristics, Power supply current in Timer mode. In addition, updated document from Fujitsu look and feel to Cypress. Cosmetic changes only.
**	–	–	09/27/2017	Updated to Cypress template.
*A	6588080	NOFL	06/04/2019	Updated template. Updated Errata. Added Appendix. Removed Section “Recommended Settings”.

Sales, Solutions, and Legal Information

Worldwide Sales and Design Support

Cypress maintains a worldwide network of offices, solution centers, manufacturer's representatives, and distributors. To find the office closest to you, visit us at Cypress Locations.

Products

Arm® Cortex® Microcontrollers	cypress.com/arm
Automotive	cypress.com/automotive
Clocks & Buffers	cypress.com/clocks
Interface	cypress.com/interface
Internet of Things	cypress.com/iot
Memory	cypress.com/memory
Microcontrollers	cypress.com/mcu
PSoC	cypress.com/psoc
Power Management ICs	cypress.com/pmic
Touch Sensing	cypress.com/touch
USB Controllers	cypress.com/usb
Wireless Connectivity	cypress.com/wireless

PSoC® Solutions

PSoC 1 | PSoC 3 | PSoC 4 | PSoC 5LP | PSoC 6 MCU

Cypress Developer Community

Community | Projects | Video | Blogs | Training | Components

Technical Support

cypress.com/support

© Cypress Semiconductor Corporation, 2012-2019. This document is the property of Cypress Semiconductor Corporation and its subsidiaries ("Cypress"). This document, including any software or firmware included or referenced in this document ("Software"), is owned by Cypress under the intellectual property laws and treaties of the United States and other countries worldwide. Cypress reserves all rights under such laws and treaties and does not, except as specifically stated in this paragraph, grant any license under its patents, copyrights, trademarks, or other intellectual property rights. If the Software is not accompanied by a license agreement and you do not otherwise have a written agreement with Cypress governing the use of the Software, then Cypress hereby grants you a personal, non-exclusive, nontransferable license (without the right to sublicense) (1) under its copyright rights in the Software (a) for Software provided in source code form, to modify and reproduce the Software solely for use with Cypress hardware products, only internally within your organization, and (b) to distribute the Software in binary code form externally to end users (either directly or indirectly through resellers and distributors), solely for use on Cypress hardware product units, and (2) under those claims of Cypress's patents that are infringed by the Software (as provided by Cypress, unmodified) to make, use, distribute, and import the Software solely for use with Cypress hardware products. Any other use, reproduction, modification, translation, or compilation of the Software is prohibited.

TO THE EXTENT PERMITTED BY APPLICABLE LAW, CYPRESS MAKES NO WARRANTY OF ANY KIND, EXPRESS OR IMPLIED, WITH REGARD TO THIS DOCUMENT OR ANY SOFTWARE OR ACCOMPANYING HARDWARE, INCLUDING, BUT NOT LIMITED TO, THE IMPLIED WARRANTIES OF MERCHANTABILITY AND FITNESS FOR A PARTICULAR PURPOSE. No computing device can be absolutely secure. Therefore, despite security measures implemented in Cypress hardware or software products, Cypress shall have no liability arising out of any security breach, such as unauthorized access to or use of a Cypress product. CYPRESS DOES NOT REPRESENT, WARRANT, OR GUARANTEE THAT CYPRESS PRODUCTS, OR SYSTEMS CREATED USING CYPRESS PRODUCTS, WILL BE FREE FROM CORRUPTION, ATTACK, VIRUSES, INTERFERENCE, HACKING, DATA LOSS OR THEFT, OR OTHER SECURITY INTRUSION (collectively, "Security Breach"). Cypress disclaims any liability relating to any Security Breach, and you shall and hereby do release Cypress from any claim, damage, or other liability arising from any Security Breach. In addition, the products described in these materials may contain design defects or errors known as errata which may cause the product to deviate from published specifications. To the extent permitted by applicable law, Cypress reserves the right to make changes to this document without further notice. Cypress does not assume any liability arising out of the application or use of any product or circuit described in this document. Any information provided in this document, including any sample design information or programming code, is provided only for reference purposes. It is the responsibility of the user of this document to properly design, program, and test the functionality and safety of any application made of this information and any resulting product. "High-Risk Device" means any device or system whose failure could cause personal injury, death, or property damage. Examples of High-Risk Devices are weapons, nuclear installations, surgical implants, and other medical devices. "Critical Component" means any component of a High-Risk Device whose failure to perform can be reasonably expected to cause, directly or indirectly, the failure of the High-Risk Device, or to affect its safety or effectiveness. Cypress is not liable, in whole or in part, and you shall and hereby do release Cypress from any claim, damage, or other liability arising from any use of a Cypress product as a Critical Component in a High-Risk Device. You shall indemnify and hold Cypress, its directors, officers, employees, agents, affiliates, distributors, and assigns harmless from and against all claims, costs, damages, and expenses, arising out of any claim, including claims for product liability, personal injury or death, or property damage arising from any use of a Cypress product as a Critical Component in a High-Risk Device. Cypress products are not intended or authorized for use as a Critical Component in any High-Risk Device except to the limited extent that (i) Cypress's published data sheet for the product explicitly states Cypress has qualified the product for use in a specific High-Risk Device, or (ii) Cypress has given you advance written authorization to use the product as a Critical Component in the specific High-Risk Device and you have signed a separate indemnification agreement.

Cypress, the Cypress logo, Spansion, the Spansion logo, and combinations thereof, WICED, PSoC, CapSense, EZ-USB, F-RAM, and Traveo are trademarks or registered trademarks of Cypress in the United States and other countries. For a more complete list of Cypress trademarks, visit cypress.com. Other names and brands may be claimed as property of their respective owners.