Please note that Cypress is an Infineon Technologies Company.
The document following this cover page is marked as “Cypress” document as this is the company that originally developed the product. Please note that Infineon will continue to offer the product to new and existing customers as part of the Infineon product portfolio.

Continuity of document content
The fact that Infineon offers the following product as part of the Infineon product portfolio does not lead to any changes to this document. Future revisions will occur when appropriate, and any changes will be set out on the document history page.

Continuity of ordering part numbers
Infineon continues to support existing part numbers. Please continue to use the ordering part numbers listed in the datasheet for ordering.

THIS SPEC IS OBSOLETE

Spec No: 001-06447

Spec Title: CY7C197BN, 256-KBIT (256 K X 1) STATIC RAM

Sunset Owner: Vinay Manikkoth (VINI)

Replaced by: none

CY7C197BN

256-Kbit (256 K × 1) Static RAM

Features

- Fast access time: 15 ns
- Wide voltage range: 5.0 V ± 10% (4.5 V to 5.5 V)
- CMOS for optimum speed and power
- TTL compatible inputs and outputs
- Available in 24-pin DIP and 24-pin SOJ

General Description

The CY7C197BN[1] is a high performance CMOS Asynchronous SRAM organized as 256 K × 1 bits that supports an asynchronous memory interface. The device features an automatic power down feature that significantly reduces power consumption when deselected.

See the Truth Table on page 10 for a complete description of Read and Write modes.

The CY7C197BN is available in 24-pin DIP and 24-pin SOJ package(s).

OBSOLETE

Logic Block Diagram

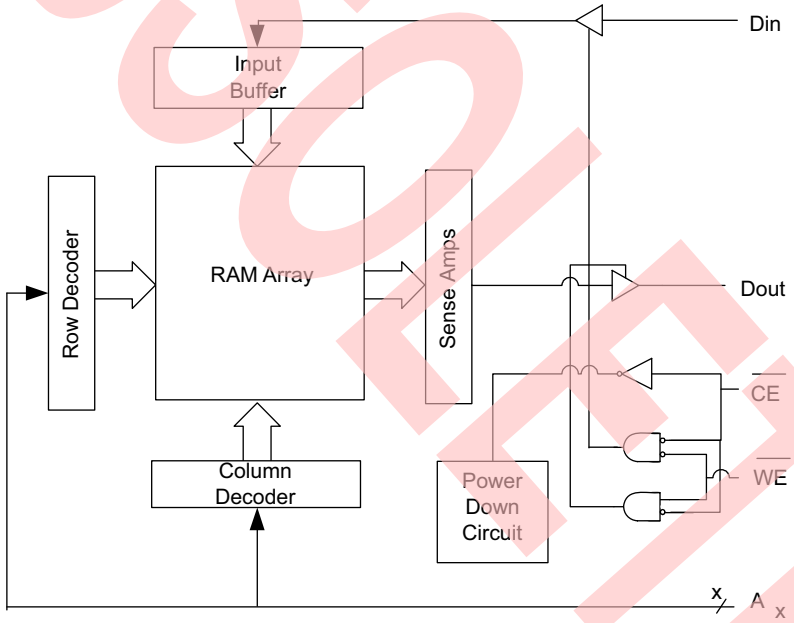

Product Portfolio

Description	-15	-25	Unit
Maximum Access Time	15	25	ns
Maximum Operating Current	150	95	mA
Maximum CMOS Standby Current	10	10	mA

Note
1. For best practice recommendations, refer to the Cypress application note *System Design Guidelines* on www.cypress.com.

Contents

Pin Layout and Specification **3**
Pin Description **4**
Maximum Ratings **5**
Operating Range **5**
DC Electrical Characteristics **5**
Capacitance **5**
Thermal Resistance **5**
AC Test Loads **6**
AC Test Conditions **6**
AC Electrical Characteristics **7**
Timing Waveforms **8**
Truth Table **10**
Ordering Information **10**
Ordering Code Definitions 10
Package Diagrams **11**
Acronyms **12**
Document Conventions **12**
Units of Measure 12
Document History Page **13**
Sales, Solutions, and Legal Information **14**
Worldwide Sales and Design Support 14
Products 14
PSoC® Solutions 14
Cypress Developer Community 14
Technical Support 14

OBSOLETE

Pin Layout and Specification

Figure 1. 24-pin DIP pinout

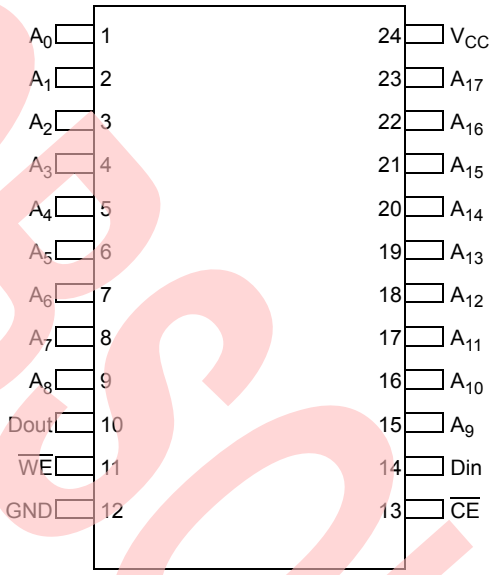

Figure 2. 24-pin SOJ pinout

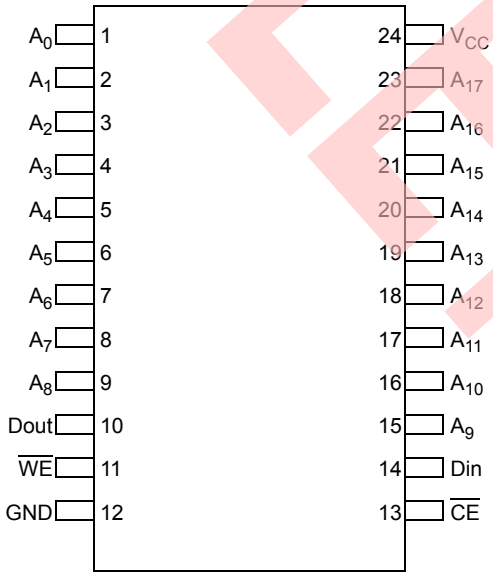

OBSOLETE

Pin Description

Pin	Type	Description	DIP	SOJ
A_X	Input	Address Inputs	1, 2, 3, 4, 5, 6, 7, 8, 9, 15, 16, 17, 18, 19, 20, 21, 22, 23	1, 2, 3, 4, 5, 6, 7, 8, 9, 15, 16, 17, 18, 19, 20, 21, 22, 23
$\overline{CE}$	Control	Chip Enable	13	13
Din	Input	Data Input Pins	14	14
Dout	Output	Data Output Pins	10	10
V_{CC}	Supply	Power (5.0 V)	24	24
$\overline{WE}$	Control	Write Enable	11	11

OBSOLETE

Maximum Ratings

Exceeding the maximum rating may impair the useful life of the device. These user guidelines are not tested.

Storage Temperature ..... –65 °C to +150 °C

Ambient Temperature with Power Applied ..... –55 °C to +125 °C

Supply Voltage on V_{CC} to Relative GND ..... –0.5 V to +7.0 V

DC Voltage Applied to Outputs in High Z State [2] ..... –0.5 V to V_{CC} + 0.5 V

DC Input Voltage [2] ..... –0.5 V to V_{CC} + 0.5 V

Current into Outputs (LOW) ..... 20 mA

Static Discharge Voltage (per MIL-STD-883, Method 3015) ..... 2001 V

Latch Up Current ..... > 200 mA

Operating Range

Range	Ambient Temperature [3]	V_{CC}
Commercial	0 °C to 70 °C	5.0 V ± 10%

DC Electrical Characteristics

Parameter [2]	Description	Condition	15 ns		25 ns		Unit
			Min	Max	Min	Max	
V_{IH}	Input HIGH Voltage		2.2	V_{CC} + 0.3	2.2	V_{CC} + 0.3	V
V_{IL}	Input LOW Voltage		–0.3	0.8	–0.3	0.8	V
V_{OH}	Output HIGH Voltage	V_{CC} = Min, I_{OH} = –4.0 mA	2.4	–	2.4	–	V
V_{OL}	Output LOW Voltage	V_{CC} = Min, I_{OL} = 8.0 mA	–	0.4	–	0.4	V
I_{OZ}	Output Leakage Current	GND ≤ Vi ≤ V_{CC}, Output Disabled	–5	+5	–5	+5	µA
I_{IX}	Input Leakage Current	GND ≤ Vi ≤ V_{CC}	–5	+5	–5	+5	µA
I_{CC}	V_{CC} Operating Supply Current	V_{CC} = Max, I_{OUT} = 0 mA, f = F_{MAX} = $1/t_{RC}$	–	150	–	95	mA
I_{SB1}	Automatic $\overline{CE}$ Power Down Current TTL Inputs	V_{CC} = Max, $\overline{CE}$ ≥ V_{IH}, V_{IN} ≥ V_{IH} or V_{IN} ≤ V_{IL}, f = F_{MAX}	–	30	–	30	mA
I_{SB2}	Automatic $\overline{CE}$ Power Down Current CMOS Inputs	V_{CC} = Max, $\overline{CE}$ ≥ V_{CC} – 0.3 V, V_{IN} ≥ V_{CC} – 0.3 V or V_{IN} < 0.3 V, f = 0	–	10	–	10	mA

Capacitance

Parameter [4]	Description	Conditions	Max (ALL – PACKAGES)	Unit
C_{IN}	Input capacitance	T_A = 25 °C, f = 1 MHz, V_{CC} = 5.0 V	8	pF
C_{OUT}	Output capacitance		10	

Thermal Resistance

Parameter [4]	Description	Conditions	24-pin DIP	24-pin SOJ	Unit
Θ_{JA}	Thermal resistance (junction to ambient)	Still Air, soldered on a 3 × 4.5 square inches, two-layer printed circuit board	75.69	84.15	°C/W
Θ_{JC}	Thermal resistance (junction to case)		33.80	37.56	

Notes
2. V_{IL}(min) = –2.0 V for pulse durations of less than 20 ns.
3. T_A is the "instant on" case temperature.
4. Tested initially and after any design or process change that may affect these parameters.

OBSOLETE

AC Test Loads

Figure 3. AC Test Loads [5]

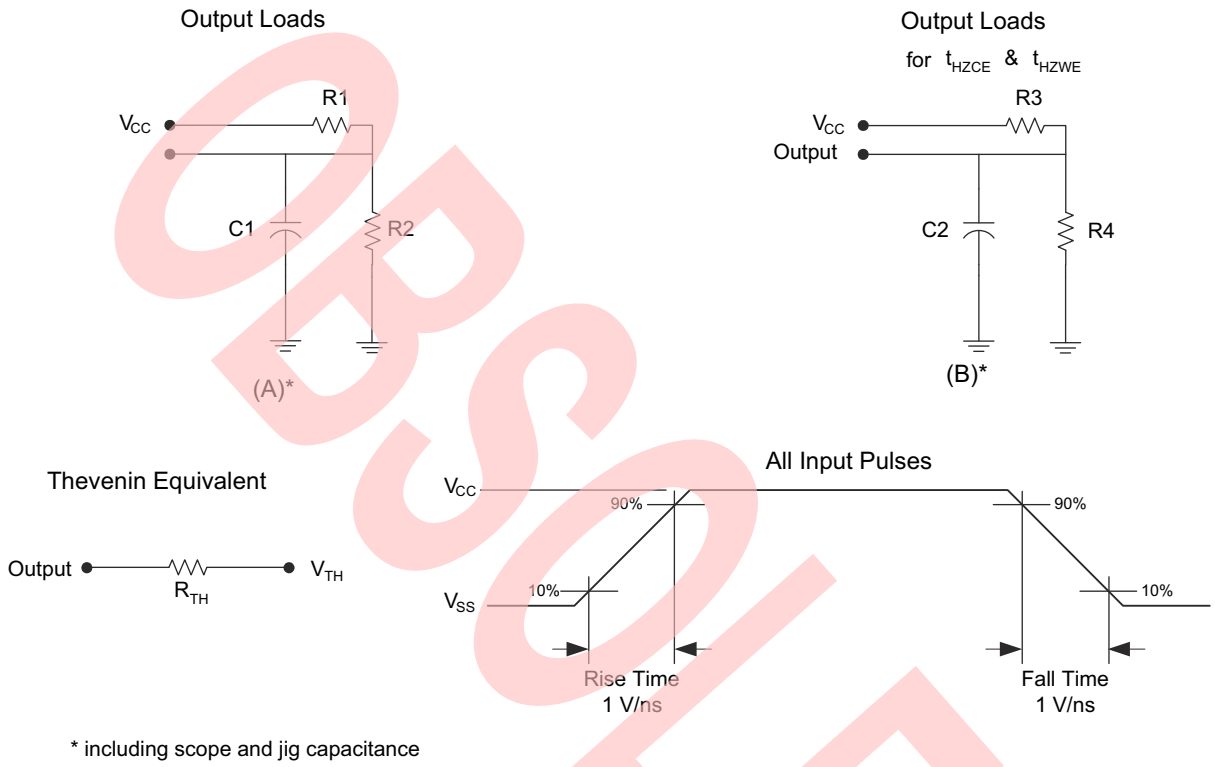

* including scope and jig capacitance

AC Test Conditions

Parameter	Description	Nom.	Unit
C1	Capacitor 1	30	pF
C2	Capacitor 2	5	
R1	Resistor 1	480	Ω
R2	Resistor 2	255	
R3	Resistor 3	480	
R4	Resistor 4	255	
R_{TH}	Resistor Thevenin	167	
V_{TH}	Voltage Thevenin	1.73	V

OBSOLETE

Note
5. Test Conditions assume a transition time of 3 ns or less, timing reference levels of 1.5 V, input pulse levels of 0 to 3.0 V.

AC Electrical Characteristics

Parameter [6, 7, 8, 9]	Description	15 ns		25 ns		Unit
		Min	Max	Min	Max	
t_{RC}	Read Cycle Time	15	–	25	–	ns
t_{AA}	Address to Data Valid	–	15	–	25	ns
t_{OHA}	Data Hold from Address Change	3	–	3	–	ns
t_{ACE}	$\overline{CE}$ to Data Valid	–	15	–	25	ns
t_{LZCE}	$\overline{CE}$ to Low Z	3	–	3	–	ns
t_{HZCE}	$\overline{CE}$ to High Z	–	5	–	11	ns
t_{PU}	$\overline{CE}$ to Power-up	0	–	0	–	ns
t_{PD}	$\overline{CE}$ to Power-down	–	15	–	20	ns
t_{WC}	Write Cycle Time	15	–	25	–	ns
t_{SCE}	$\overline{CE}$ to Write End	9	–	20	–	ns
t_{AW}	Address Set-up to Write End	10	–	20	–	ns
t_{HA}	Address Hold from Write End	0	–	0	–	ns
t_{SA}	Address Set-up to Write Start	0	–	0	–	ns
t_{PWE}	$\overline{WE}$ Pulse Width	9	–	20	–	ns
t_{SD}	Data Set-Up to Write End	9	–	15	–	ns
t_{HD}	Data Hold from Write End	0	–	0	–	ns
t_{HZWE}	$\overline{WE}$ LOW to High Z	–	7	–	11	ns
t_{LZWE}	$\overline{WE}$ HIGH to Low Z	2	–	3	–	ns

OBSOLETE

Notes

6. Tested initially and after any design or process change that may affect these parameters.
7. At any given temperature and voltage condition, t_{HZCE} is less than t_{LZCE}, and t_{HZWE} is less than t_{LZWE} for any given device.
8. The internal Write time of the memory is defined by the overlap of CE LOW and WE LOW. CE and WE must be LOW to initiate a write, and the transition of any of these signals can terminate the Write. The input data setup and hold timing should be referenced to the leading edge of the signal that terminates the write.
9. t_{HZCE}, t_{HZWE} are specified as in part (b) of the Figure 3 on page 6. Transitions are measured ±200 mV from steady state voltage.

Timing Waveforms

Figure 4. Read Cycle No. 1 [10, 11]

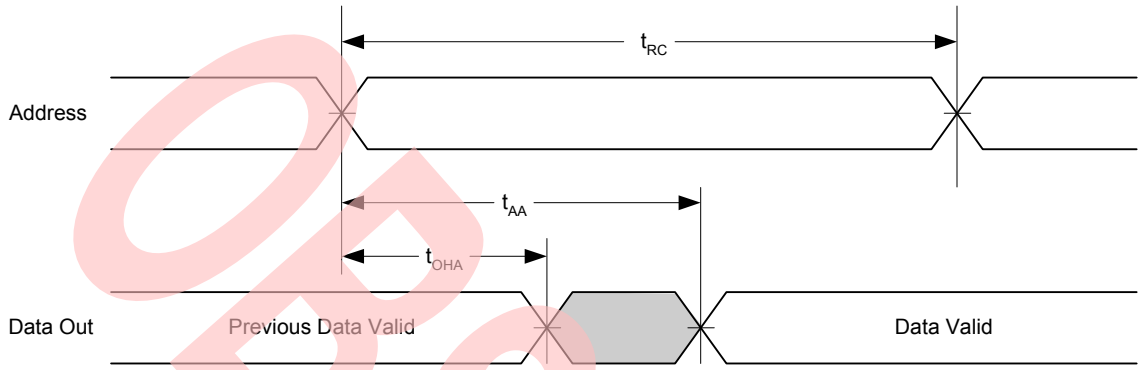

Figure 5. Read Cycle No. 2 [11, 12, 13]

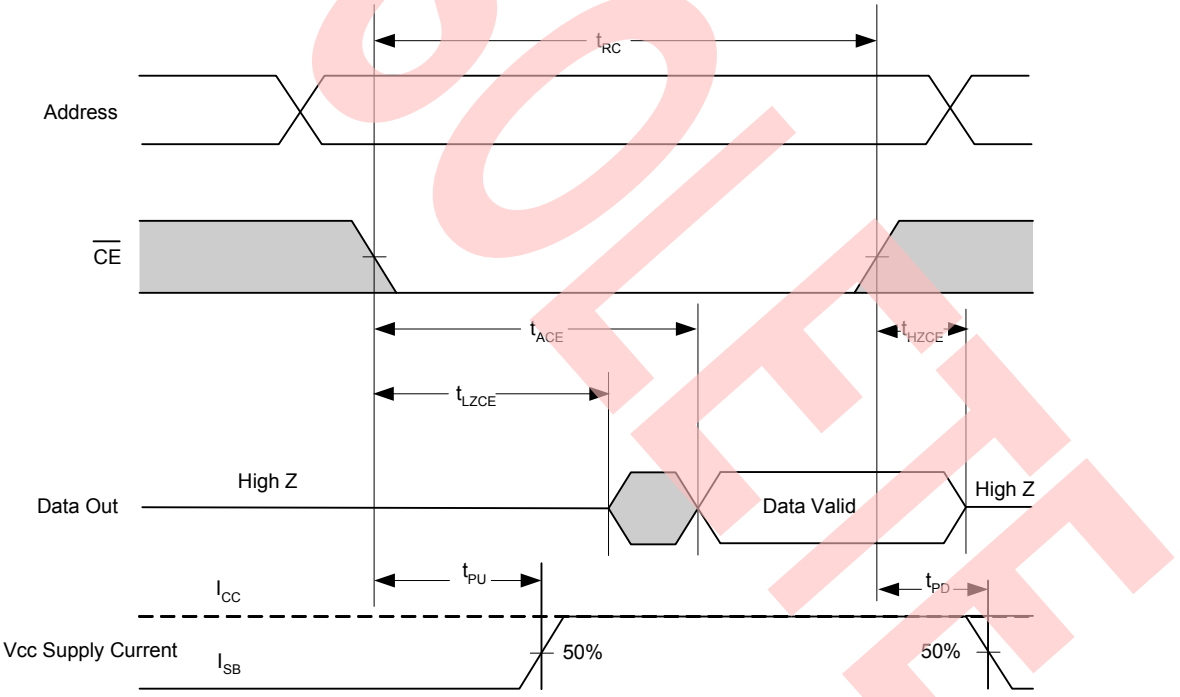

OBSOLETE

Notes
10. Device is continuously selected. $\overline{CE} = V_{IL}$.
11. $\overline{WE}$ is HIGH in Read Cycle.
12. Tested initially and after any design or process change that may affect these parameters.
13. Address valid prior to or coincident with $\overline{CE}$ transition LOW.

Timing Waveforms *(continued)*

Figure 6. Write Cycle No. 1 ($\overline{WE}$ Controlled) [14, 15]

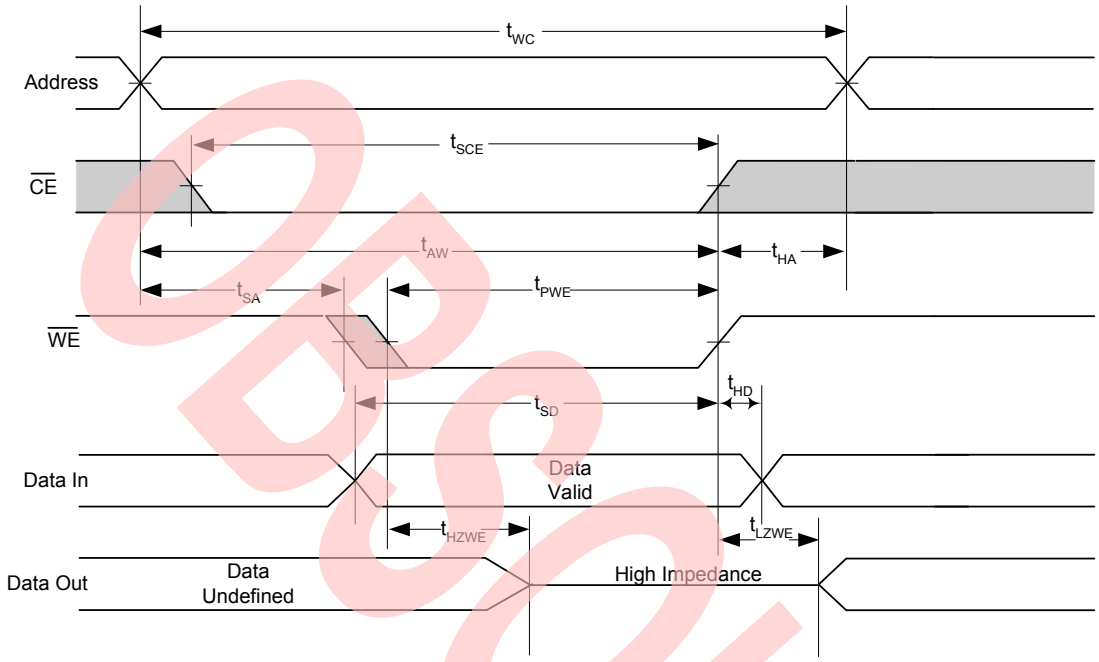

Figure 7. Write Cycle No. 2 ($\overline{CE}$ Controlled) [16, 17]

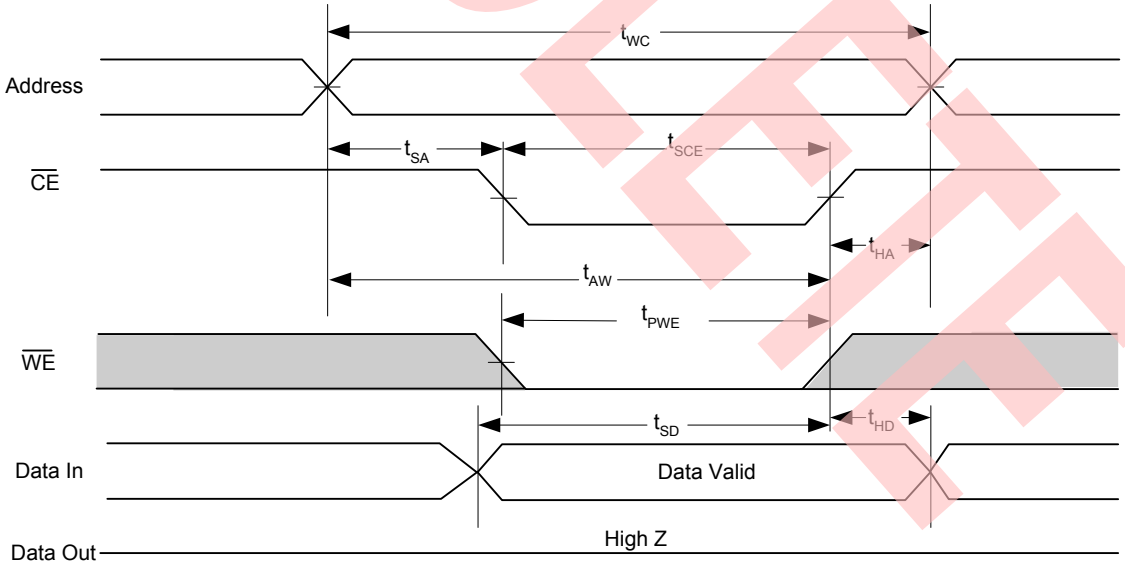

OBSOLETE

Notes
14. Tested initially and after any design or process change that may affect these parameters.
15. The minimum write cycle time is the sum of t_{HZWE} and t_{SD}.
16. This cycle is $\overline{CE}$ controlled.
17. If $\overline{CE}$ goes HIGH simultaneously with $\overline{WE}$ going HIGH, the output remains in a high impedance state.

Truth Table

$\overline{CE}$	$\overline{WE}$	I/Ox	Mode	Power
H	X	High Z	Deselect/Power-Down	Standby (I_{SB})
L	H	Data Out	Read	Active (I_{CC})
L	L	Data In	Write	Active (I_{CC})

Ordering Information

Speed (ns)	Ordering Code	Package Diagram	Package Type	Operating Range
15	CY7C197BN-15VC	51-85030	24-pin SOJ (8 × 15 × 3.5 mm)	Commercial

Please contact local sales representative regarding availability of these parts.

Ordering Code Definitions

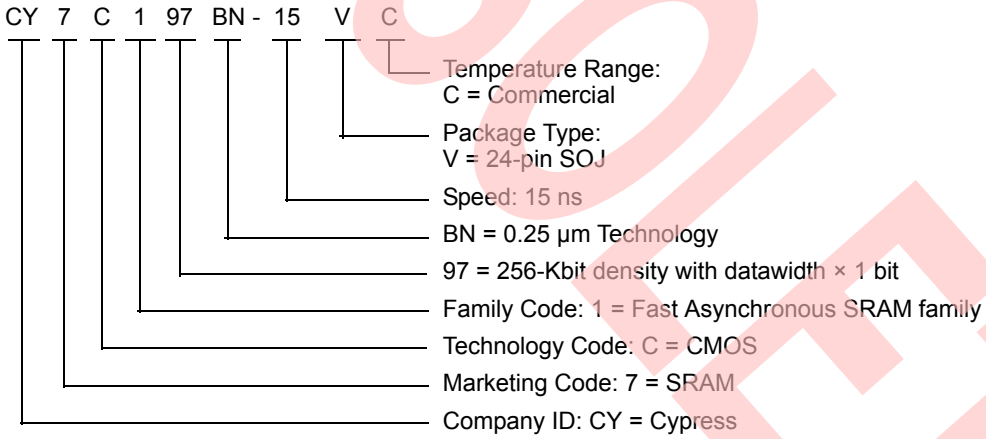

OBSOLETE

Package Diagrams

Figure 8. 24-pin SOJ (300 Mils) V24.3/VZ24.3 (Molded SOJ V13) Package Outline, 51-85030

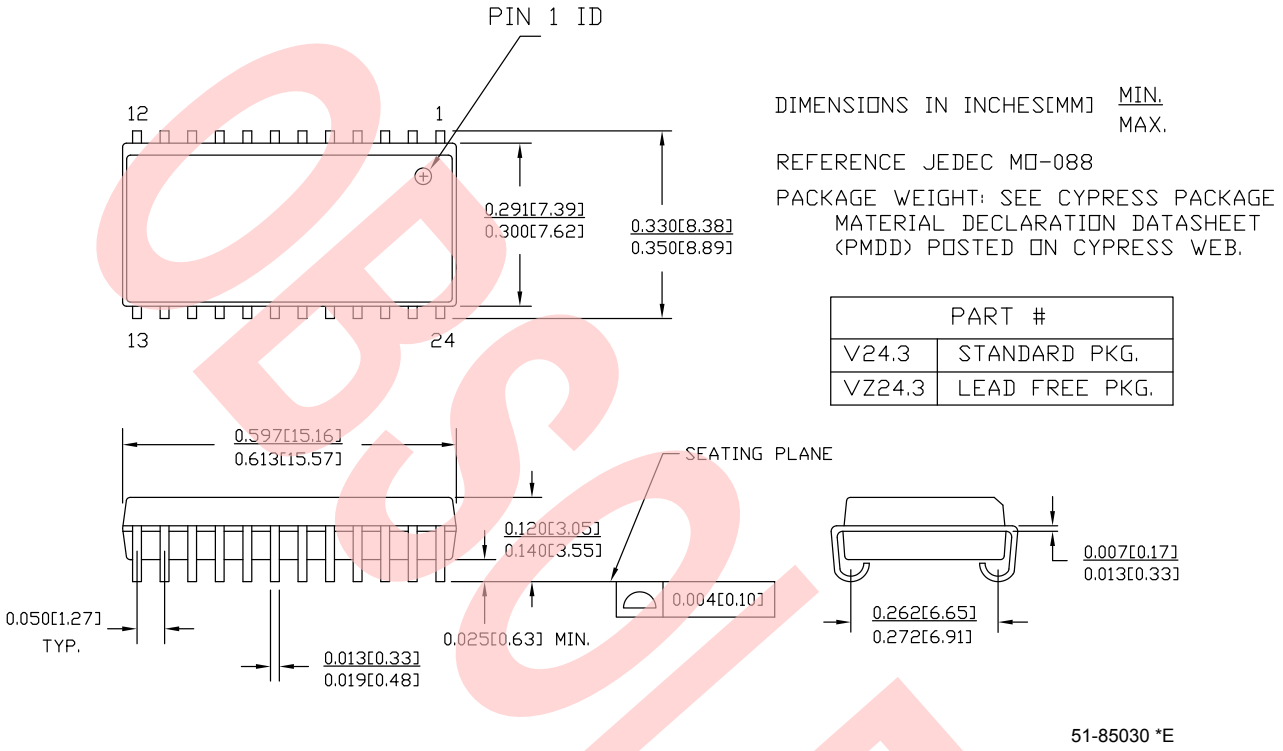

Figure 9. 24-pin PDIP (1.260 × .270 × .140 inches) P24.3 Package Outline, 51-85013

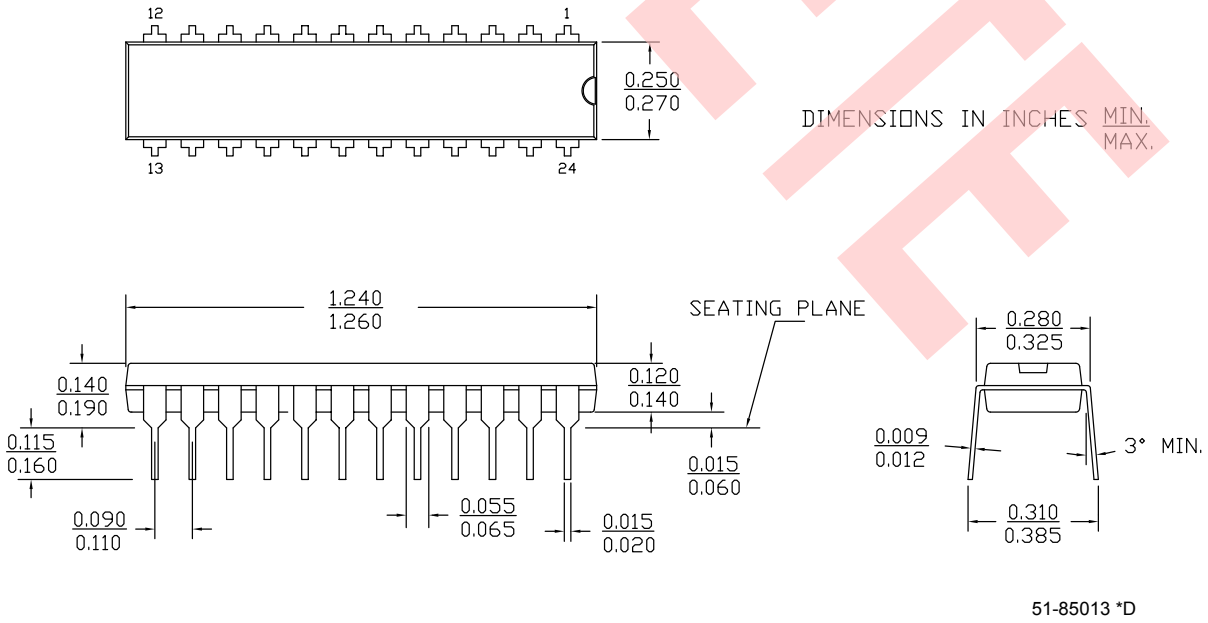

OBSOLETE

Acronyms

Acronym	Description
CMOS	Complementary Metal Oxide Semiconductor
$\overline{CE}$	Chip Enable
DIP	Dual In-line Package
SOJ	Small Outline J-lead
SRAM	Static Random Access Memory
TTL	Transistor-Transistor Logic
$\overline{WE}$	Write Enable

Document Conventions

Units of Measure

Symbol	Unit of Measure
°C	degree Celsius
MHz	megahertz
µA	microampere
mA	milliampere
mm	millimeter
ms	millisecond
ns	nanosecond
Ω	ohm
%	percent
pF	picofarad
V	volt
W	watt

OBSOLETE

Document History Page

Document Title: CY7C197BN, 256-Kbit (256 K × 1) Static RAM Document Number: 001-06447				
Rev.	**ECN No.**	**Issue Date**	**Orig. of Change**	**Description of Change**
**	901742	See ECN	NXR	New data sheet.
*A	2892510	03/18/2010	VKN	Removed 12 ns speed bin information in all instances across the document. Updated Ordering Information. Updated Package Diagrams. Added Sales, Solutions, and Legal Information.
*B	3108898	12/13/2010	AJU	Added Ordering Code Definitions.
*C	3217480	04/06/2011	PRAS	Added Acronyms and Units of Measure. Updated in new template.
*D	3841481	12/14/2012	TAVA	Updated Ordering Information (Updated part numbers). Updated Package Diagrams (spec 51-85030 (Changed revision from *C to *E), spec 51-85013 (Changed revision from *C to *D)).
*E	4336876	04/08/2014	VINI	Updated in new template. Completing Sunset Review.
*F	4748562	04/30/2015	VINI	Obsolete document. Completing Sunset Review.

OBSOLETE

OBSOLETE

Sales, Solutions, and Legal Information

Worldwide Sales and Design Support

Cypress maintains a worldwide network of offices, solution centers, manufacturer's representatives, and distributors. To find the office closest to you, visit us at Cypress Locations.

Products

Automotive	cypress.com/go/automotive
Clocks & Buffers	cypress.com/go/clocks
Interface	cypress.com/go/interface
Lighting & Power Control	cypress.com/go/powerpsoc cypress.com/go/plc
Memory	cypress.com/go/memory
PSoC	cypress.com/go/psoc
Touch Sensing	cypress.com/go/touch
USB Controllers	cypress.com/go/USB
Wireless/RF	cypress.com/go/wireless

PSoC® Solutions

psoc.cypress.com/solutions

PSoC 1 | PSoC 3 | PSoC 4 | PSoC 5LP

Cypress Developer Community

Community | Forums | Blogs | Video | Training

Technical Support

cypress.com/go/support

OBSOLETE

© Cypress Semiconductor Corporation, 2007-2015. The information contained herein is subject to change without notice. Cypress Semiconductor Corporation assumes no responsibility for the use of any circuitry other than circuitry embodied in a Cypress product. Nor does it convey or imply any license under patent or other rights. Cypress products are not warranted nor intended to be used for medical, life support, life saving, critical control or safety applications, unless pursuant to an express written agreement with Cypress. Furthermore, Cypress does not authorize its products for use as critical components in life-support systems where a malfunction or failure may reasonably be expected to result in significant injury to the user. The inclusion of Cypress products in life-support systems application implies that the manufacturer assumes all risk of such use and in doing so indemnifies Cypress against all charges.

Any Source Code (software and/or firmware) is owned by Cypress Semiconductor Corporation (Cypress) and is protected by and subject to worldwide patent protection (United States and foreign), United States copyright laws and international treaty provisions. Cypress hereby grants to licensee a personal, non-exclusive, non-transferable license to copy, use, modify, create derivative works of, and compile the Cypress Source Code and derivative works for the sole purpose of creating custom software and or firmware in support of licensee product to be used only in conjunction with a Cypress integrated circuit as specified in the applicable agreement. Any reproduction, modification, translation, compilation, or representation of this Source Code except as specified above is prohibited without the express written permission of Cypress.

Disclaimer: CYPRESS MAKES NO WARRANTY OF ANY KIND, EXPRESS OR IMPLIED, WITH REGARD TO THIS MATERIAL, INCLUDING, BUT NOT LIMITED TO, THE IMPLIED WARRANTIES OF MERCHANTABILITY AND FITNESS FOR A PARTICULAR PURPOSE. Cypress reserves the right to make changes without further notice to the materials described herein. Cypress does not assume any liability arising out of the application or use of any product or circuit described herein. Cypress does not authorize its products for use as critical components in life-support systems where a malfunction or failure may reasonably be expected to result in significant injury to the user. The inclusion of Cypress' product in a life-support systems application implies that the manufacturer assumes all risk of such use and in doing so indemnifies Cypress against all charges.

Use may be limited by and subject to the applicable Cypress software license agreement.

All products and company names mentioned in this document may be the trademarks of their respective holders.