Please note that Cypress is an Infineon Technologies Company.
The document following this cover page is marked as “Cypress” document as this is the company that originally developed the product. Please note that Infineon will continue to offer the product to new and existing customers as part of the Infineon product portfolio.

Continuity of document content
The fact that Infineon offers the following product as part of the Infineon product portfolio does not lead to any changes to this document. Future revisions will occur when appropriate, and any changes will be set out on the document history page.

Continuity of ordering part numbers
Infineon continues to support existing part numbers. Please continue to use the ordering part numbers listed in the datasheet for ordering.

THIS SPEC IS OBSOLETE

Spec No: 38-05357

Spec Title: CY7C1441AV33, 36-MBIT (1M X 36) FLOW-THROUGH SRAM

Replaced by: NONE

CY7C1441AV33

36-Mbit (1M × 36) Flow-Through SRAM

Features

- Supports 133-MHz bus operations
- 1M × 36 common I/O
- 3.3 V core power supply
- 2.5 V or 3.3 V I/O power supply
- Fast clock-to-output times
  - 6.5 ns (133-MHz version)
- Provide high-performance 2-1-1-1 access rate
- User-selectable burst counter supporting Intel® Pentium® interleaved or linear burst sequences
- Separate processor and controller address strobes
- Synchronous self-timed write
- Asynchronous output enable
- CY7C1441AV33 available in JEDEC-standard Pb-free 100-pin TQFP package, Pb-free 165-ball FBGA package.
- IEEE 1149.1 JTAG-Compatible Boundary Scan
- “ZZ” Sleep Mode option

Functional Description

The CY7C1441AV33 are 3.3 V, 1M × 36 Synchronous Flow-through SRAMs, respectively designed to interface with high-speed microprocessors with minimum glue logic. Maximum access delay from clock rise is 6.5 ns (133-MHz version). A 2-bit on-chip counter captures the first address in a burst and increments the address automatically for the rest of the burst access. All synchronous inputs are gated by registers controlled by a positive-edge-triggered Clock Input (CLK). The synchronous inputs include all addresses, all data inputs, address-pipelining Chip Enable ($\overline{CE_1}$), depth-expansion Chip Enables (CE_2 and $\overline{CE_3}$), Burst Control inputs (ADSC, ADSP, and ADV), Write Enables ($\overline{BW_x}$, and $\overline{BWE}$), and Global Write ($\overline{GW}$). Asynchronous inputs include the Output Enable ($\overline{OE}$) and the ZZ pin.

The CY7C1441AV33 allows either interleaved or linear burst sequences, selected by the MODE input pin. A HIGH selects an interleaved burst sequence, while a LOW selects a linear burst sequence. Burst accesses can be initiated with the Processor Address Strobe ($\overline{ADSP}$) or the cache Controller Address Strobe (ADSC) inputs. Address advancement is controlled by the Address Advancement ($\overline{ADV}$) input.

Addresses and chip enables are registered at rising edge of clock when either Address Strobe Processor ($\overline{ADSP}$) or Address Strobe Controller (ADSC) are active. Subsequent burst addresses can be internally generated as controlled by the Advance pin ($\overline{ADV}$).

The CY7C1441AV33 operates from a +3.3 V core power supply while all outputs may operate with either a +2.5 or +3.3 V supply. All inputs and outputs are JEDEC-standard JESD8-5-compatible.

For a complete list of related documentation, click here.

OBSOLETE

Selection Guide

Description	133 MHz	Unit
Maximum Access Time	6.5	ns
Maximum Operating Current	310	mA
Maximum CMOS Standby Current	120	mA

Logic Block Diagram – CY7C1441AV33

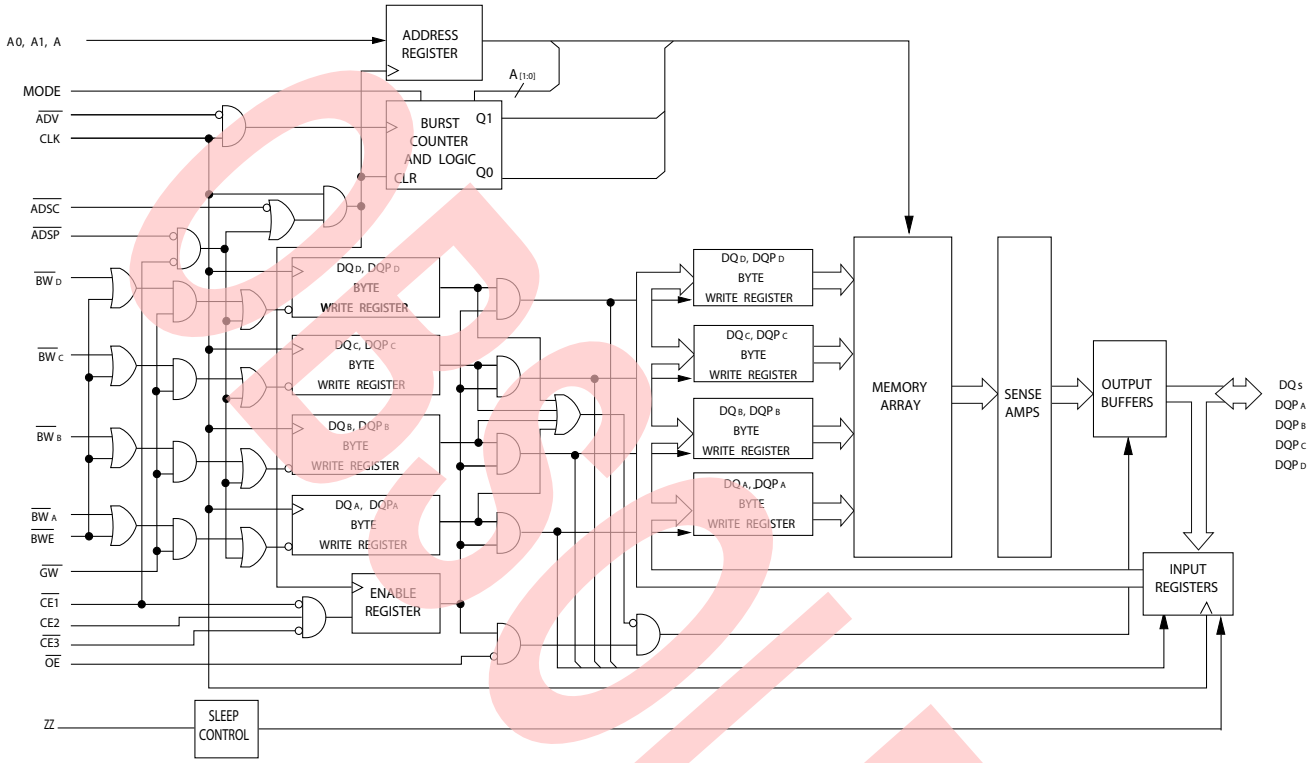

OBSOLETE

Contents

Pin Configurations 4
Pin Definitions 6
Functional Overview 7
- Single Read Accesses 7
- Single Write Accesses Initiated by ADSP 7
- Single Write Accesses Initiated by ADSC 7
- Burst Sequences 8
- Sleep Mode 8
- Interleaved Burst Address Table 8
- Linear Burst Address Table 8
- ZZ Mode Electrical Characteristics 8

Truth Table 9
Truth Table for Read/Write 10
IEEE 1149.1 Serial Boundary Scan (JTAG) 11
- Disabling the JTAG Feature 11
- Test Access Port (TAP) 11
- PERFORMING A TAP RESET 11
- TAP REGISTERS 11
- TAP Instruction Set 11

TAP Controller State Diagram 13
TAP Controller Block Diagram 14
TAP Timing 14
TAP AC Switching Characteristics 15
3.3 V TAP AC Test Conditions 16
3.3 V TAP AC Output Load Equivalent 16
2.5 V TAP AC Test Conditions 16
2.5 V TAP AC Output Load Equivalent 16
TAP DC Electrical Characteristics and Operating Conditions 16
Identification Register Definitions 17
Scan Register Sizes 17
Identification Codes 17
Boundary Scan Order 18
Maximum Ratings 19
Operating Range 19
Electrical Characteristics 19
- DC Electrical Characteristics 19

Capacitance 20
Thermal Resistance 20
AC Test Loads and Waveforms 21
Switching Characteristics 22
Timing Diagrams 23
Ordering Information 27
- Ordering Code Definitions 27

Package Diagrams 28
Acronyms 30
Document Conventions 30
- Units of Measure 30

Document History Page 31
Sales, Solutions, and Legal Information 34
- Worldwide Sales and Design Support 34
- Products 34
- PSoC® Solutions 34
- Cypress Developer Community 34
- Technical Support 34

OBSOLETE

Pin Configurations

Figure 1. 100-pin TQFP (14 × 20 × 1.4 mm) pinout

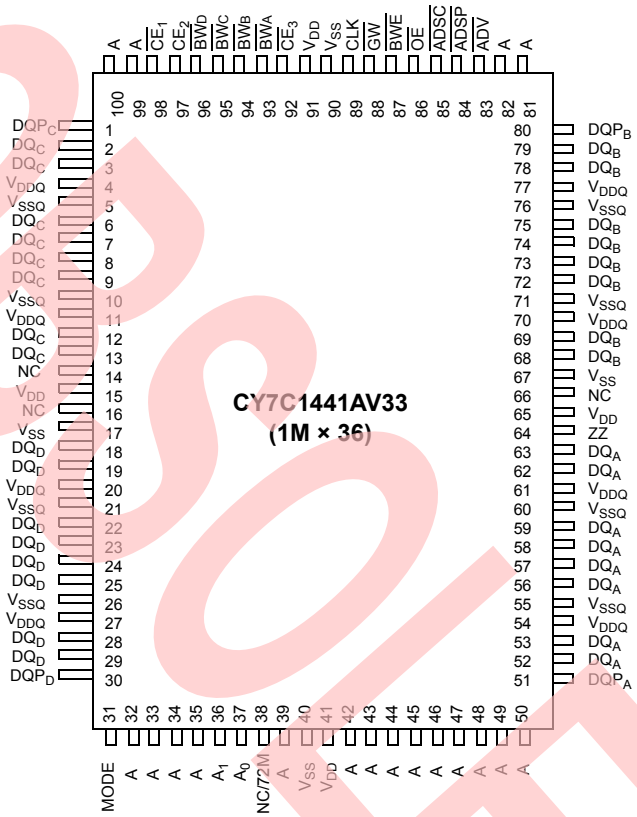

OBSOLETE

Pin Configurations (continued)

Figure 2. 165-ball FBGA (15 × 17 × 1.4 mm) pinout

CY7C1441AV33 (1M × 36)

	1	2	3	4	5	6	7	8	9	10	11
A	NC/288M	A	$\overline{CE_1}$	$\overline{BW_C}$	$\overline{BW_B}$	$\overline{CE_3}$	$\overline{BWE}$	$\overline{ADSC}$	$\overline{ADV}$	A	NC
B	NC/144M	A	CE_2	$\overline{BW_D}$	$\overline{BW_A}$	CLK	$\overline{GW}$	$\overline{OE}$	$\overline{ADSP}$	A	NC/576M
C	DQP_C	NC	V_{DDQ}	V_{SS}	V_{SS}	V_{SS}	V_{SS}	V_{SS}	V_{DDQ}	NC/1G	DQP_B
D	DQ_C	DQ_C	V_{DDQ}	V_{DD}	V_{SS}	V_{SS}	V_{SS}	V_{DD}	V_{DDQ}	DQ_B	DQ_B
E	DQ_C	DQ_C	V_{DDQ}	V_{DD}	V_{SS}	V_{SS}	V_{SS}	V_{DD}	V_{DDQ}	DQ_B	DQ_B
F	DQ_C	DQ_C	V_{DDQ}	V_{DD}	V_{SS}	V_{SS}	V_{SS}	V_{DD}	V_{DDQ}	DQ_B	DQ_B
G	DQ_C	DQ_C	V_{DDQ}	V_{DD}	V_{SS}	V_{SS}	V_{SS}	V_{DD}	V_{DDQ}	DQ_B	DQ_B
H	NC	NC	NC	V_{DD}	V_{SS}	V_{SS}	V_{SS}	V_{DD}	NC	NC	ZZ
J	DQ_D	DQ_D	V_{DDQ}	V_{DD}	V_{SS}	V_{SS}	V_{SS}	V_{DD}	V_{DDQ}	DQ_A	DQ_A
K	DQ_D	DQ_D	V_{DDQ}	V_{DD}	V_{SS}	V_{SS}	V_{SS}	V_{DD}	V_{DDQ}	DQ_A	DQ_A
L	DQ_D	DQ_D	V_{DDQ}	V_{DD}	V_{SS}	V_{SS}	V_{SS}	V_{DD}	V_{DDQ}	DQ_A	DQ_A
M	DQ_D	DQ_D	V_{DDQ}	V_{DD}	V_{SS}	V_{SS}	V_{SS}	V_{DD}	V_{DDQ}	DQ_A	DQ_A
N	DQP_D	NC	V_{DDQ}	V_{SS}	NC	A	NC	V_{SS}	V_{DDQ}	NC	DQP_A
P	NC	NC/72M	A	A	TDI	A1	TDO	A	A	A	A
R	MODE	A	A	A	TMS	A0	TCK	A	A	A	A

OBSOLETE

Pin Definitions

Name	I/O	Description
A_0, A_1, A	Input-Synchronous	**Address Inputs Used to Select One of the Address Locations**. Sampled at the rising edge of the CLK if ADSP or ADSC is active LOW, and $\overline{CE}_1$, CE_2, and $\overline{CE}_3$ are sampled active. $A_{[1:0]}$ feed the 2-bit counter.
$\overline{BW}_A$, $\overline{BW}_B$, $\overline{BW}_C$, $\overline{BW}_D$	Input-Synchronous	**Byte Write Select Inputs, Active LOW**. Qualified with $\overline{BWE}$ to conduct byte writes to the SRAM. Sampled on the rising edge of CLK.
$\overline{GW}$	Input-Synchronous	**Global Write Enable Input, Active LOW**. When asserted LOW on the rising edge of CLK, a global write is conducted (ALL bytes are written, regardless of the values on $\overline{BW}_X$ and $\overline{BWE}$).
CLK	Input-Clock	**Clock Input**. Used to capture all synchronous inputs to the device. Also used to increment the burst counter when ADV is asserted LOW, during a burst operation.
$\overline{CE}_1$	Input-Synchronous	**Chip Enable 1 Input, Active LOW**. Sampled on the rising edge of CLK. Used in conjunction with CE_2 and $\overline{CE}_3$ to select/deselect the device. ADSP is ignored if $\overline{CE}_1$ is HIGH. $\overline{CE}_1$ is sampled only when a new external address is loaded.
CE_2	Input-Synchronous	**Chip Enable 2 Input, Active HIGH**. Sampled on the rising edge of CLK. Used in conjunction with $\overline{CE}_1$ and $\overline{CE}_3$ to select/deselect the device. CE_2 is sampled only when a new external address is loaded.
$\overline{CE}_3$	Input-Synchronous	**Chip Enable 3 Input, Active LOW**. Sampled on the rising edge of CLK. Used in conjunction with $\overline{CE}_1$ and CE_2 to select/deselect the device. $\overline{CE}_3$ is assumed active throughout this document for BGA. $\overline{CE}_3$ is sampled only when a new external address is loaded.
$\overline{OE}$	Input-Asynchronous	**Output Enable, Asynchronous Input, Active LOW**. Controls the direction of the I/O pins. When LOW, the I/O pins behave as outputs. When deasserted HIGH, I/O pins are tri-stated, and act as input data pins. $\overline{OE}$ is masked during the first clock of a read cycle when emerging from a deselected state.
$\overline{ADV}$	Input-Synchronous	**Advance Input Signal, Sampled on the Rising Edge of CLK**. When asserted, it automatically increments the address in a burst cycle.
$\overline{ADSP}$	Input-Synchronous	**Address Strobe from Processor, Sampled on the Rising Edge of CLK, Active LOW**. When asserted LOW, addresses presented to the device are captured in the address registers. $A_{[1:0]}$ are also loaded into the burst counter. When ADSP and ADSC are both asserted, only ADSP is recognized. ASDP is ignored when $\overline{CE}_1$ is deasserted HIGH
$\overline{ADSC}$	Input-Synchronous	**Address Strobe from Controller, Sampled on the Rising Edge of CLK, Active LOW**. When asserted LOW, addresses presented to the device are captured in the address registers. $A_{[1:0]}$ are also loaded into the burst counter. When ADSP and ADSC are both asserted, only ADSP is recognized·
$\overline{BWE}$	Input-Synchronous	**Byte Write Enable Input, Active LOW**. Sampled on the rising edge of CLK. This signal must be asserted LOW to conduct a byte write.
ZZ	Input-Asynchronous	**ZZ "sleep" Input, Active HIGH**. When asserted HIGH places the device in a non-time-critical "sleep" condition with data integrity preserved. For normal operation, this pin must be LOW or left floating. ZZ pin has an internal pull down.
DQ_s	I/O-Synchronous	**Bidirectional Data I/O lines**. As inputs, they feed into an on-chip data register that is triggered by the rising edge of CLK. As outputs, they deliver the data contained in the memory location specified by the addresses presented during the previous clock rise of the read cycle. The direction of the pins is controlled by $\overline{OE}$. When $\overline{OE}$ is asserted LOW, the pins behave as outputs. When HIGH, DQ_s and DQP_X are placed in a tri-state condition.The outputs are automatically tri-stated during the data portion of a write sequence, during the first clock when emerging from a deselected state, and when the device is deselected, regardless of the state of $\overline{OE}$.
DQP_X	I/O-Synchronous	**Bidirectional Data Parity I/O Lines.** Functionally, these signals are identical to DQ_s. During write sequences, DQP_x is controlled by $\overline{BW}_{[A:H]}$ correspondingly.
MODE	Input-Static	**Selects Burst Order**. When tied to GND selects linear burst sequence. When tied to V_{DD} or left floating selects interleaved burst sequence. This is a strap pin and should remain static during device operation. Mode Pin has an internal pull up.
V_{DD}	Power Supply	**Power Supply Inputs to the Core of the Device**.

Pin Definitions (continued)

Name	I/O	Description
V_{DDQ}	I/O Power Supply	**Power Supply for the I/O Circuitry**.
V_{SS}	Ground	**Ground for the Core of the Device**.
V_{SSQ}	I/O Ground	**Ground for the I/O Circuitry**.
TDO	JTAG serial output Synchronous	**Serial Data-Out to the JTAG Circuit**. Delivers data on the negative edge of TCK. If the JTAG feature is not being utilized, this pin should be left unconnected. This pin is not available on TQFP packages.
TDI	JTAG serial input Synchronous	**Serial Data-In to the JTAG Circuit**. Sampled on the rising edge of TCK. If the JTAG feature is not being utilized, this pin can be left floating or connected to V_{DD} through a pull up resistor. This pin is not available on TQFP packages.
TMS	JTAG serial input Synchronous	**Serial Data-In to the JTAG Circuit**. Sampled on the rising edge of TCK. If the JTAG feature is not being utilized, this pin can be disconnected or connected to V_{DD}. This pin is not available on TQFP packages.
TCK	JTAG-Clock	**Clock Input to the JTAG Circuitry**. If the JTAG feature is not being utilized, this pin must be connected to V_{SS}. This pin is not available on TQFP packages.
NC	–	**No Connects**. Not internally connected to the die. 72M, 144M and 288M are address expansion pins are not internally connected to the die.
NC/72M, NC/144M, NC/288M, NC/576M, NC/1G	–	**No Connects**. Not internally connected to the die. NC/72M, NC/144M, NC/288M, NC/576M and NC/1G are address expansion pins are not internally connected to the die.

Functional Overview

All synchronous inputs pass through input registers controlled by the rising edge of the clock. Maximum access delay from the clock rise (t_{CDV}) is 6.5 ns (133-MHz device).

The CY7C1441AV33 supports secondary cache in systems utilizing either a linear or interleaved burst sequence. The interleaved burst order supports Pentium and i486™ processors. The linear burst sequence is suited for processors that utilize a linear burst sequence. The burst order is user-selectable, and is determined by sampling the MODE input. Accesses can be initiated with either the Processor Address Strobe ($\overline{ADSP}$) or the Controller Address Strobe ($\overline{ADSC}$). Address advancement through the burst sequence is controlled by the $\overline{ADV}$ input. A two-bit on-chip wraparound burst counter captures the first address in a burst sequence and automatically increments the address for the rest of the burst access.

Byte write operations are qualified with the Byte Write Enable ($\overline{BWE}$) and Byte Write Select ($\overline{BW_X}$) inputs. A Global Write Enable ($\overline{GW}$) overrides all byte write inputs and writes data to all four bytes. All writes are simplified with on-chip synchronous self-timed write circuitry.

Three synchronous Chip Selects ($\overline{CE_1}$, CE_2, $\overline{CE_3}$) and an asynchronous Output Enable ($\overline{OE}$) provide for easy bank selection and output tri-state control. $\overline{ADSP}$ is ignored if $\overline{CE_1}$ is HIGH.

Single Read Accesses

A single read access is initiated when the following conditions are satisfied at clock rise: (1) $\overline{CE_1}$, CE_2, and $\overline{CE_3}$ are all asserted active, and (2) $\overline{ADSP}$ or $\overline{ADSC}$ is asserted LOW (if the access is initiated by $\overline{ADSC}$, the write inputs must be deasserted during this first cycle). The address presented to the address inputs is latched into the address register and the burst counter/control logic and presented to the memory core. If the $\overline{OE}$ input is asserted LOW, the requested data is available at the data outputs a maximum to t_{CDV} after clock rise. $\overline{ADSP}$ is ignored if $\overline{CE_1}$ is HIGH.

Single Write Accesses Initiated by $\overline{ADSP}$

This access is initiated when the following conditions are satisfied at clock rise: (1) $\overline{CE_1}$, CE_2, $\overline{CE_3}$ are all asserted active, and (2) $\overline{ADSP}$ is asserted LOW. The addresses presented are loaded into the address register and the burst inputs ($\overline{GW}$, $\overline{BWE}$, and $\overline{BW_X}$)are ignored during this first clock cycle. If the write inputs are asserted active (see Write Cycle Descriptions table for appropriate states that indicate a write) on the next clock rise, the appropriate data is latched and written into the device. Byte writes are allowed. All IOs are tri-stated during a byte write.Since this is a common I/O device, the asynchronous $\overline{OE}$ input signal must be deasserted and the IOs must be tri-stated prior to the presentation of data to DQs. As a safety precaution, the data lines are tri-stated once a write cycle is detected, regardless of the state of $\overline{OE}$.

Single Write Accesses Initiated by $\overline{ADSC}$

This write access is initiated when the following conditions are satisfied at clock rise: (1) $\overline{CE_1}$, CE_2, and $\overline{CE_3}$ are all asserted active, (2) $\overline{ADSC}$ is asserted LOW, (3) $\overline{ADSP}$ is deasserted HIGH, and (4) the write input signals ($\overline{GW}$, $\overline{BWE}$, and $\overline{BW_X}$) indicate a write access. $\overline{ADSC}$ is ignored if $\overline{ADSP}$ is active LOW.

PRELIMINARY

The addresses presented are loaded into the address register and the burst counter/control logic and delivered to the memory core. The information presented to DQ_S is written into the specified address location. Byte writes are allowed. All IOs are tri-stated when a write is detected, even a byte write. Since this is a common I/O device, the asynchronous $\overline{OE}$ input signal must be deasserted and the IOs must be tri-stated prior to the presentation of data to DQs. As a safety precaution, the data lines are tri-stated once a write cycle is detected, regardless of the state of $\overline{OE}$.

Burst Sequences

The CY7C1441AV33 provides an on-chip two-bit wraparound burst counter inside the SRAM. The burst counter is fed by $A_{[1:0]}$, and can follow either a linear or interleaved burst order. The burst order is determined by the state of the MODE input. A LOW on MODE selects a linear burst sequence. A HIGH on MODE selects an interleaved burst order. Leaving MODE unconnected causes the device to default to a interleaved burst sequence.

Sleep Mode

The ZZ input pin is an asynchronous input. Asserting ZZ places the SRAM in a power conservation “sleep” mode. Two clock cycles are required to enter into or exit from this “sleep” mode. While in this mode, data integrity is guaranteed. Accesses pending when entering the “sleep” mode are not considered valid nor is the completion of the operation guaranteed. The device must be deselected prior to entering the “sleep” mode. $\overline{CE_1}$, CE_2, $\overline{CE_3}$, $\overline{ADSP}$, and $\overline{ADSC}$ must remain inactive for the duration of t_{ZZREC} after the ZZ input returns LOW.

Interleaved Burst Address Table

(MODE = Floating or V_{DD})

First Address A1:A0	Second Address A1:A0	Third Address A1:A0	Fourth Address A1:A0
00	01	10	11
01	00	11	10
10	11	00	01
11	10	01	00

Linear Burst Address Table

(MODE = GND)

First Address A1:A0	Second Address A1:A0	Third Address A1:A0	Fourth Address A1:A0
00	01	10	11
01	10	11	00
10	11	00	01
11	00	01	10

ZZ Mode Electrical Characteristics

Parameter	Description	Test Conditions	Min	Max	Unit
I_{DDZZ}	Sleep mode standby current	$ZZ \geq V_{DD} - 0.2$ V	–	100	mA
t_{ZZS}	Device operation to ZZ	$ZZ \geq V_{DD} - 0.2$ V	–	$2t_{CYC}$	ns
t_{ZZREC}	ZZ recovery time	$ZZ \leq 0.2$ V	$2t_{CYC}$	–	ns
t_{ZZI}	ZZ active to sleep current	This parameter is sampled	–	$2t_{CYC}$	ns
t_{RZZI}	ZZ Inactive to exit sleep current	This parameter is sampled	0	–	ns

PRELIMINARY

Truth Table

The truth table for CY7C1441AV33 follows. [1, 2, 3, 4, 5]

Cycle Description	Address Used	$\overline{CE_1}$	CE_2	$\overline{CE_3}$	ZZ	$\overline{ADSP}$	$\overline{ADSC}$	$\overline{ADV}$	$\overline{WRITE}$	$\overline{OE}$	CLK	DQ
Deselected Cycle, Power down	None	H	X	X	L	X	L	X	X	X	L–H	Tri-State
Deselected Cycle, Power down	None	L	L	X	L	L	X	X	X	X	L–H	Tri-State
Deselected Cycle, Power down	None	L	X	H	L	L	X	X	X	X	L–H	Tri-State
Deselected Cycle, Power down	None	L	L	X	L	H	L	X	X	X	L–H	Tri-State
Deselected Cycle, Power down	None	X	X	X	L	H	L	X	X	X	L–H	Tri-State
Sleep Mode, Power down	None	X	X	X	H	X	X	X	X	X	X	Tri-State
Read Cycle, Begin Burst	External	L	H	L	L	L	X	X	X	L	L–H	Q
Read Cycle, Begin Burst	External	L	H	L	L	L	X	X	X	H	L–H	Tri-State
Write Cycle, Begin Burst	External	L	H	L	L	H	L	X	L	X	L–H	D
Read Cycle, Begin Burst	External	L	H	L	L	H	L	X	H	L	L–H	Q
Read Cycle, Begin Burst	External	L	H	L	L	H	L	X	H	H	L–H	Tri-State
Read Cycle, Continue Burst	Next	X	X	X	L	H	H	L	H	L	L–H	Q
Read Cycle, Continue Burst	Next	X	X	X	L	H	H	L	H	H	L–H	Tri-State
Read Cycle, Continue Burst	Next	H	X	X	L	X	H	L	H	L	L–H	Q
Read Cycle, Continue Burst	Next	H	X	X	L	X	H	L	H	H	L–H	Tri-State
Write Cycle, Continue Burst	Next	X	X	X	L	H	H	L	L	X	L–H	D
Write Cycle, Continue Burst	Next	H	X	X	L	X	H	L	L	X	L–H	D
Read Cycle, Suspend Burst	Current	X	X	X	L	H	H	H	H	L	L–H	Q
Read Cycle, Suspend Burst	Current	X	X	X	L	H	H	H	H	H	L–H	Tri-State
Read Cycle, Suspend Burst	Current	H	X	X	L	X	H	H	H	L	L–H	Q
Read Cycle, Suspend Burst	Current	H	X	X	L	X	H	H	H	H	L–H	Tri-State
Write Cycle, Suspend Burst	Current	X	X	X	L	H	H	H	L	X	L–H	D
Write Cycle, Suspend Burst	Current	H	X	X	L	X	H	H	L	X	L–H	D

OBSOLETE

Notes

1. X = "Don't Care." H = Logic HIGH, L = Logic LOW.
2. $\overline{WRITE}$ = L when any one or more Byte Write enable signals and $\overline{BWE}$ = L or $\overline{GW}$ = L. $\overline{WRITE}$ = H when all Byte write enable signals, $\overline{BWE}$, $\overline{GW}$ = H.
3. The DQ pins are controlled by the current cycle and the $\overline{OE}$ signal. $\overline{OE}$ is asynchronous and is not sampled with the clock.
4. The SRAM always initiates a read cycle when $\overline{ADSP}$ is asserted, regardless of the state of $\overline{GW}$, $\overline{BWE}$, or $\overline{BW_X}$. Writes may occur only on subsequent clocks after the ADSP or with the assertion of $\overline{ADSC}$. As a result, $\overline{OE}$ must be driven HIGH prior to the start of the write cycle to allow the outputs to tri-state. $\overline{OE}$ is a don't care for the remainder of the write cycle.
5. $\overline{OE}$ is asynchronous and is not sampled with the clock rise. It is masked internally during write cycles. During a read cycle all data bits are tri-state when $\overline{OE}$ is inactive or when the device is deselected, and all data bits behave as output when $\overline{OE}$ is active (LOW).

Truth Table for Read/Write

Function (CY7C1441AV33) [6, 7]	$\overline{GW}$	$\overline{BWE}$	$\overline{BW_D}$	$\overline{BW_C}$	$\overline{BW_B}$	$\overline{BW_A}$
Read	H	H	X	X	X	X
Read	H	L	H	H	H	H
Write Byte A (DQ_A, DQP_A)	H	L	H	H	H	L
Write Byte B(DQ_B, DQP_B)	H	L	H	H	L	H
Write Bytes A, B (DQ_A, DQ_B, DQP_A, DQP_B)	H	L	H	H	L	L
Write Byte C (DQ_C, DQP_C)	H	L	H	L	H	H
Write Bytes C, A (DQ_C, DQ_A, DQP_C, DQP_A)	H	L	H	L	H	L
Write Bytes C, B (DQ_C, DQ_B, DQP_C, DQP_B)	H	L	H	L	L	H
Write Bytes C, B, A (DQ_C, DQ_B, DQ_A, DQP_C, DQP_B, DQP_A)	H	L	H	L	L	L
Write Byte D (DQ_D, DQP_D)	H	L	L	H	H	H
Write Bytes D, A (DQ_D, DQ_A, DQP_D, DQP_A)	H	L	L	H	H	L
Write Bytes D, B (DQ_D, DQ_A, DQP_D, DQP_A)	H	L	L	H	L	H
Write Bytes D, B, A (DQ_D, DQ_B, DQ_A, DQP_D, DQP_B, DQP_A)	H	L	L	H	L	L
Write Bytes D, B (DQ_D, DQ_B, DQP_D, DQP_B)	H	L	L	L	H	H
Write Bytes D, B, A (DQ_D, DQ_C, DQ_A, DQP_D, DQP_C, DQP_A)	H	L	L	L	H	L
Write Bytes D, C, A (DQ_D, DQ_B, DQ_A, DQP_D, DQP_B, DQP_A)	H	L	L	L	L	H
Write All Bytes	H	L	L	L	L	L
Write All Bytes	L	X	X	X	X	X

OBSOLETE

Notes
6. X = “Don't Care.” H = Logic HIGH, L = Logic LOW.
7. Table only lists a partial listing of the byte write combinations. Any Combination of $\overline{BW_X}$ is valid Appropriate write is done based on which byte write is active.

IEEE 1149.1 Serial Boundary Scan (JTAG)

The CY7C1441AV33 incorporates a serial boundary scan test access port (TAP). This part is fully compliant with 1149.1. The TAP operates using JEDEC-standard 3.3 V or 2.5 V I/O logic levels.

The CY7C1441AV33 contains a TAP controller, instruction register, boundary scan register, bypass register, and ID register.

Disabling the JTAG Feature

It is possible to operate the SRAM without using the JTAG feature. To disable the TAP controller, TCK must be tied LOW (V_{SS}) to prevent clocking of the device. TDI and TMS are internally pulled up and may be unconnected. They may alternately be connected to V_{DD} through a pull up resistor. TDO should be left unconnected. Upon power up, the device comes up in a reset state which does not interfere with the operation of the device.

Test Access Port (TAP)

Test Clock (TCK)

The test clock is used only with the TAP controller. All inputs are captured on the rising edge of TCK. All outputs are driven from the falling edge of TCK.

Test Mode Select (TMS)

The TMS input is used to give commands to the TAP controller and is sampled on the rising edge of TCK. It is allowable to leave this ball unconnected if the TAP is not used. The ball is pulled up internally, resulting in a logic HIGH level.

Test Data-In (TDI)

The TDI ball is used to serially input information into the registers and can be connected to the input of any of the registers. The register between TDI and TDO is chosen by the instruction that is loaded into the TAP instruction register. TDI is internally pulled up and can be unconnected if the TAP is unused in an application. TDI is connected to the most significant bit (MSB) of any register.

Test Data-Out (TDO)

The TDO output ball is used to serially clock data-out from the registers. The output is active depending upon the current state of the TAP state machine. The output changes on the falling edge of TCK. TDO is connected to the least significant bit (LSB) of any register.

Performing a TAP Reset

A RESET is performed by forcing TMS HIGH (V_{DD}) for five rising edges of TCK. This RESET does not affect the operation of the SRAM and may be performed while the SRAM is operating.

At power up, the TAP is reset internally to ensure that TDO comes up in a High Z state.

TAP Registers

Registers are connected between the TDI and TDO balls and scan data into and out of the SRAM test circuitry. Only one register can be selected at a time through the instruction register. Data is serially loaded into the TDI ball on the rising edge of TCK. Data is output on the TDO ball on the falling edge of TCK.

Instruction Register

Three-bit instructions can be serially loaded into the instruction register. This register is loaded when it is placed between the TDI and TDO balls as shown in the TAP Controller Block Diagram on page 14. Upon power up, the instruction register is loaded with the IDCODE instruction. It is also loaded with the IDCODE instruction if the controller is placed in a reset state as described in the previous section.

When the TAP controller is in the Capture-IR state, the two least significant bits are loaded with a binary “01” pattern to allow for fault isolation of the board-level serial test data path.

Bypass Register

To save time when serially shifting data through registers, it is sometimes advantageous to skip certain chips. The bypass register is a single-bit register that can be placed between the TDI and TDO balls. This shifts data through the SRAM with minimal delay. The bypass register is set LOW (V_{SS}) when the BYPASS instruction is executed.

Boundary Scan Register

The boundary scan register is connected to all the input and bidirectional balls on the SRAM. The length of the boundary scan register for the SRAM in different packages is listed in the Scan Register Sizes on page 17.

The boundary scan register is loaded with the contents of the RAM I/O ring when the TAP controller is in the Capture-DR state and is then placed between the TDI and TDO balls when the controller is moved to the Shift-DR state. The EXTEST, SAMPLE/PRELOAD and SAMPLE Z instructions can be used to capture the contents of the I/O ring.

The Boundary Scan Order tables show the order in which the bits are connected. Each bit corresponds to one of the bumps on the SRAM package. The MSB of the register is connected to TDI, and the LSB is connected to TDO.

Identification (ID) Register

The ID register is loaded with a vendor-specific, 32-bit code during the Capture-DR state when the IDCODE command is loaded in the instruction register. The IDCODE is hardwired into the SRAM and can be shifted out when the TAP controller is in the Shift-DR state. The ID register has a vendor code and other information described in the Identification Register Definitions on page 17.

TAP Instruction Set

Overview

Eight different instructions are possible with the three bit instruction register. All combinations are listed in the Identification Codes on page 17. Three of these instructions are listed as RESERVED and should not be used. The other five instructions are described in this section in detail.

Instructions are loaded into the TAP controller during the Shift-IR state when the instruction register is placed between TDI and TDO. During this state, instructions are shifted through the instruction register through the TDI and TDO balls. To execute

OBSOLETE

the instruction once it is shifted in, the TAP controller must be moved into the Update-IR state.

IDCODE

The IDCODE instruction loads a vendor-specific, 32-bit code into the instruction register. It also places the instruction register between the TDI and TDO balls and shifts the IDCODE out of the device when the TAP controller enters the Shift-DR state.

The IDCODE instruction is loaded into the instruction register upon power up or whenever the TAP controller is given a test logic reset state.

SAMPLE Z

The SAMPLE Z instruction connects the boundary scan register between the TDI and TDO pins when the TAP controller is in a Shift-DR state. The SAMPLE Z command puts the output bus into a High Z state until the next command is given during the "Update IR" state.

SAMPLE/PRELOAD

SAMPLE/PRELOAD is a 1149.1 mandatory instruction. When the SAMPLE/PRELOAD instructions are loaded into the instruction register and the TAP controller is in the Capture-DR state, a snapshot of data on the inputs and output pins is captured in the boundary scan register.

The user must be aware that the TAP controller clock can only operate at a frequency up to 20 MHz, while the SRAM clock operates more than an order of magnitude faster. Because there is a large difference in the clock frequencies, it is possible that during the Capture-DR state, an input or output undergoes a transition. The TAP may then try to capture a signal while in transition (metastable state). This does not harm the device, but there is no guarantee as to the value that is captured. Repeatable results may not be possible.

To guarantee that the boundary scan register captures the correct value of a signal, the SRAM signal must be stabilized long enough to meet the TAP controller's capture setup plus hold times (t_{CS} and t_{CH}). The SRAM clock input might not be captured correctly if there is no way in a design to stop (or slow) the clock during a SAMPLE/PRELOAD instruction. If this is an issue, it is still possible to capture all other signals and simply ignore the value of the CK and $\overline{CK}$ captured in the boundary scan register.

After the data is captured, it is possible to shift out the data by putting the TAP into the Shift-DR state. This places the boundary scan register between the TDI and TDO pins.

PRELOAD places an initial data pattern at the latched parallel outputs of the boundary scan register cells prior to the selection of another boundary scan test operation.

The shifting of data for the SAMPLE and PRELOAD phases can occur concurrently when required – that is, while data captured is shifted out, the preloaded data can be shifted in.

BYPASS

When the BYPASS instruction is loaded in the instruction register and the TAP is placed in a Shift-DR state, the bypass register is placed between the TDI and TDO pins. The advantage of the BYPASS instruction is that it shortens the boundary scan path when multiple devices are connected together on a board.

EXTEST

The EXTEST instruction drives the preloaded data out through the system output pins. This instruction also connects the boundary scan register for serial access between the TDI and TDO in the shift-DR controller state.

EXTEST OUTPUT BUS TRI-STATE

IEEE Standard 1149.1 mandates that the TAP controller be able to put the output bus into a tri-state mode.

The boundary scan register has a special bit located at bit #89 (for 165-ball FBGA package) or bit #138 (for 209-ball FBGA package). When this scan cell, called the "extest output bus tri-state", is latched into the preload register during the "Update-DR" state in the TAP controller, it directly controls the state of the output (Q-bus) pins, when the EXTEST is entered as the current instruction. When HIGH, it enables the output buffers to drive the output bus. When LOW, this bit places the output bus into a High Z condition.

This bit can be set by entering the SAMPLE/PRELOAD or EXTEST command, and then shifting the desired bit into that cell, during the "Shift-DR" state. During "Update-DR", the value loaded into that shift-register cell latches into the preload register. When the EXTEST instruction is entered, this bit directly controls the output Q-bus pins. Note that this bit is pre-set HIGH to enable the output when the device is powered-up, and also when the TAP controller is in the "Test-Logic-Reset" state.

Reserved

These instructions are not implemented but are reserved for future use. Do not use these instructions.

PRELIMINARY

TAP Controller State Diagram

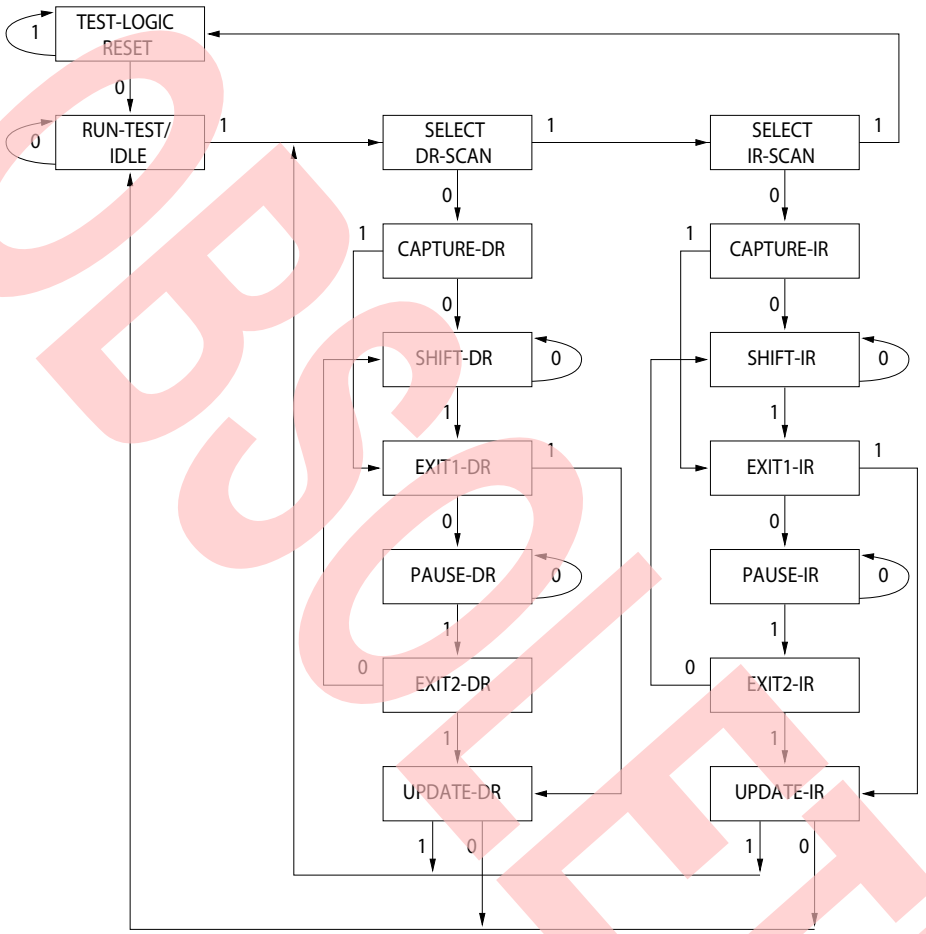

The 0/1 next to each state represents the value of TMS at the rising edge of TCK.

OBSOLETE

TAP Controller Block Diagram

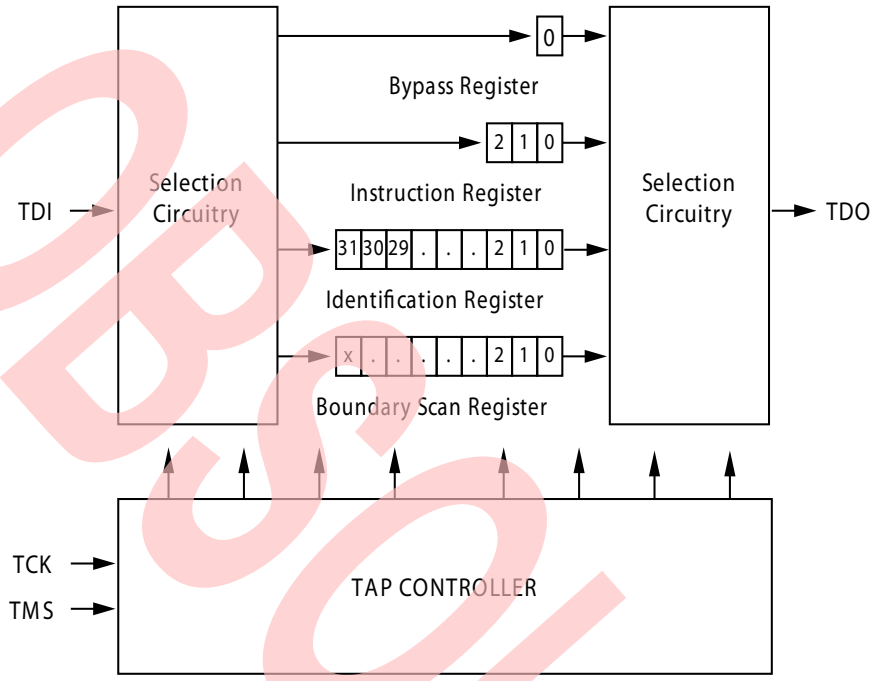

TAP Timing

Figure 3. TAP Timing

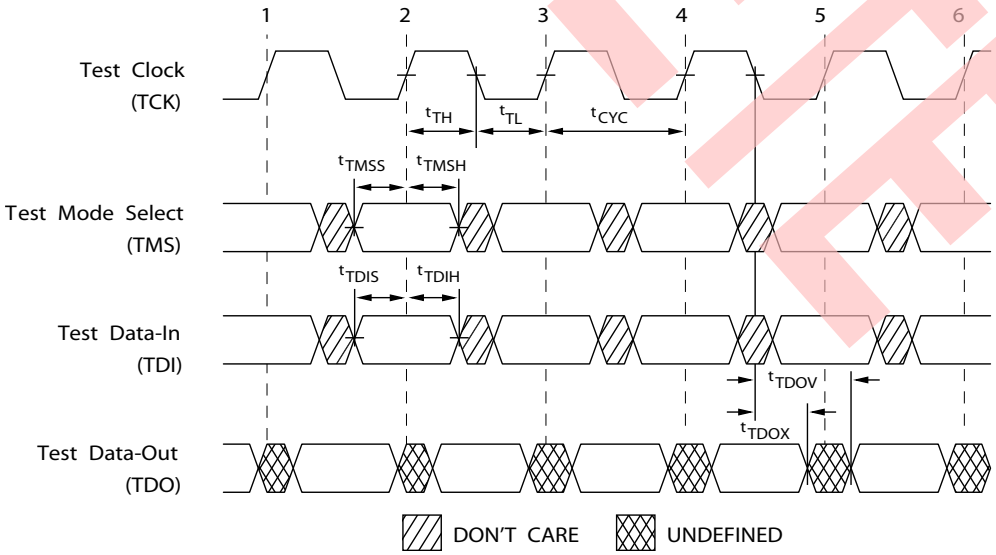

OBSOLETE

TAP AC Switching Characteristics

Over the Operating Range

Parameter [9, 10]	Description	Min	Max	Unit
Clock				
t_{TCYC}	TCK Clock Cycle Time	50	–	ns
t_{TF}	TCK Clock Frequency	–	20	MHz
t_{TH}	TCK Clock HIGH time	20	–	ns
t_{TL}	TCK Clock LOW time	20	–	ns
Output Times				
t_{TDOV}	TCK Clock LOW to TDO Valid	–	10	ns
t_{TDOX}	TCK Clock LOW to TDO Invalid	0	–	ns
Setup Times				
t_{TMSS}	TMS Setup to TCK Clock Rise	5	–	ns
t_{TDIS}	TDI Setup to TCK Clock Rise	5	–	ns
t_{CS}	Capture Setup to TCK Rise	5	–	ns
Hold Times				
t_{TMSH}	TMS Hold after TCK Clock Rise	5	–	ns
t_{TDIH}	TDI Hold after Clock Rise	5	–	ns
t_{CH}	Capture Hold after Clock Rise	5	–	ns

OBSOLETE

Notes

9. t_{CS} and t_{CH} refer to the setup and hold time requirements of latching data from the boundary scan register.
10. Test conditions are specified using the load in TAP AC test Conditions. t_R/t_F = 1 ns.

3.3 V TAP AC Test Conditions

Input pulse levels ..... V_{SS} to 3.3 V
Input rise and fall times ..... 1 ns
Input timing reference levels ..... 1.5 V
Output reference levels ..... 1.5 V
Test load termination supply voltage ..... 1.5 V

2.5 V TAP AC Test Conditions

Input pulse levels ..... V_{SS} to 2.5 V
Input rise and fall time ..... 1 ns
Input timing reference levels ..... 1.25 V
Output reference levels ..... 1.25 V
Test load termination supply voltage ..... 1.25 V

3.3 V TAP AC Output Load Equivalent

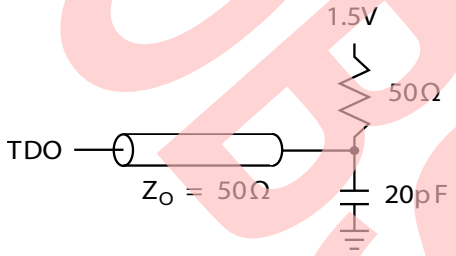

2.5 V TAP AC Output Load Equivalent

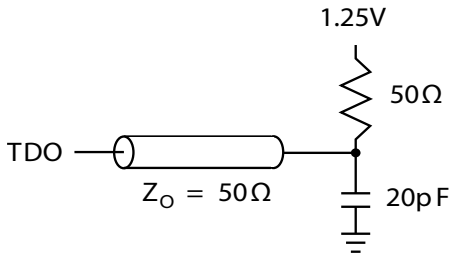

TAP DC Electrical Characteristics and Operating Conditions

(0 °C < T_A < +70 °C; V_{DD} = 3.135 V to 3.6 V unless otherwise noted)

Parameter [11]	Description	Conditions		Min	Max	Unit
V_{OH1}	Output HIGH Voltage	I_{OH} = –4.0 mA	V_{DDQ} = 3.3 V	2.4	–	V
		I_{OH} = –1.0 mA	V_{DDQ} = 2.5 V	2.0	–	V
V_{OH2}	Output HIGH Voltage	I_{OH} = –100 µA	V_{DDQ} = 3.3 V	2.9	–	V
			V_{DDQ} = 2.5 V	2.1	–	V
V_{OL1}	Output LOW Voltage	I_{OL} = 8.0 mA	V_{DDQ} = 3.3 V	–	0.4	V
		I_{OL} = 1.0 mA	V_{DDQ} = 2.5 V	–	0.4	V
V_{OL2}	Output LOW Voltage	I_{OL} = 100 µA	V_{DDQ} = 3.3 V	–	0.2	V
			V_{DDQ} = 2.5 V	–	0.2	V
V_{IH}	Input HIGH Voltage		V_{DDQ} = 3.3 V	2.0	V_{DD} + 0.3	V
			V_{DDQ} = 2.5 V	1.7	V_{DD} + 0.3	V
V_{IL}	Input LOW Voltage		V_{DDQ} = 3.3 V	–0.3	0.8	V
			V_{DDQ} = 2.5 V	–0.3	0.7	V
I_X	Input Load Current	GND ≤ V_{IN} ≤ V_{DDQ}		–5	5	µA

Note
11. All voltages referenced to V_{SS} (GND).

OBSOLETE

Identification Register Definitions

Instruction Field	CY7C1441AV33 (1M × 36)	Description
Revision Number (31:29)	000	Describes the version number.
Device Depth (28:24)	01011	Reserved for Internal Use
Architecture/Memory Type(23:18) [12]	000001	Defines memory type and architecture
Bus Width/Density(17:12)	100111	Defines width and density
Cypress JEDEC ID Code (11:1)	00000110100	Allows unique identification of SRAM vendor.
ID Register Presence Indicator (0)	1	Indicates the presence of an ID register.

Scan Register Sizes

Register Name	Bit Size (× 36)
Instruction Bypass	3
Bypass	1
ID	32
Boundary Scan Order (165-ball FBGA package)	89

Identification Codes

Instruction	Code	Description
EXTEST	000	Captures I/O ring contents.
IDCODE	001	Loads the ID register with the vendor ID code and places the register between TDI and TDO. This operation does not affect SRAM operations.
SAMPLE Z	010	Captures I/O ring contents. Places the boundary scan register between TDI and TDO. Forces all SRAM output drivers to a High Z state.
RESERVED	011	Do Not Use: This instruction is reserved for future use.
SAMPLE/PRELOAD	100	Captures I/O ring contents. Places the boundary scan register between TDI and TDO. Does not affect SRAM operation.
RESERVED	101	Do Not Use: This instruction is reserved for future use.
RESERVED	110	Do Not Use: This instruction is reserved for future use.
BYPASS	111	Places the bypass register between TDI and TDO. This operation does not affect SRAM operations.

OBSOLETE

Note
12. Bit #24 is “1” in the ID Register Definitions for both 2.5 V and 3.3 V versions of this device.

Boundary Scan Order

165-ball FBGA [13, 14]

CY7C1441AV33 (1M × 36)

Bit #	Ball ID	Bit #	Ball ID	Bit #	Ball ID	Bit #	Ball ID
1	N6	26	E11	51	A3	76	N1
2	N7	27	D11	52	A2	77	N2
3	N10	28	G10	53	B2	78	P1
4	P11	29	F10	54	C2	79	R1
5	P8	30	E10	55	B1	80	R2
6	R8	31	D10	56	A1	81	P3
7	R9	32	C11	57	C1	82	R3
8	P9	33	A11	58	D1	83	P2
9	P10	34	B11	59	E1	84	R4
10	R10	35	A10	60	F1	85	P4
11	R11	36	B10	61	G1	86	N5
12	H11	37	A9	62	D2	87	P6
13	N11	38	B9	63	E2	88	R6
14	M11	39	C10	64	F2	89	Internal
15	L11	40	A8	65	G2		
16	K11	41	B8	66	H1		
17	J11	42	A7	67	H3		
18	M10	43	B7	68	J1		
19	L10	44	B6	69	K1		
20	K10	45	A6	70	L1		
21	J10	46	B5	71	M1		
22	H9	47	A5	72	J2		
23	H10	48	A4	73	K2		
24	G11	49	B4	74	L2		
25	F11	50	B3	75	M2		

OBSOLETE

Notes
13. Balls which are NC (No Connect) are preset LOW.
14. Bit# 89 is preset HIGH.

Maximum Ratings

Exceeding maximum ratings may shorten the useful life of the device. User guidelines are not tested.

Storage Temperature ..... –65 °C to +150 °C

Ambient Temperature with Power Applied ..... –55 °C to +125 °C

Supply Voltage on V_{DD} Relative to GND .....–0.3 V to +4.6 V

Supply Voltage on V_{DDQ} Relative to GND .... –0.3 V to +V_{DD}

DC Voltage Applied to Outputs in Tri-State ..... –0.5 V to V_{DDQ} + 0.5 V

DC Input Voltage ..... –0.5 V to V_{DD} + 0.5 V

Current into Outputs (LOW) ..... 20 mA

Static Discharge Voltage (per MIL-STD-883, Method 3015) ..... > 2001 V

Latch-up Current ..... > 200 mA

Operating Range

Range	Ambient Temperature	V_{DD}	V_{DDQ}
Commercial	0 °C to +70 °C	3.3 V – 5% / + 10%	2.5 V – 5% to V_{DD}
Industrial	–40 °C to +85 °C		

Electrical Characteristics

Over the Operating Range

DC Electrical Characteristics

Over the Operating Range

Parameter [15, 16]	Description	Test Conditions		Min	Max	Unit
V_{DD}	Power Supply Voltage			3.135	3.6	V
V_{DDQ}	I/O Supply Voltage	for 3.3 V I/O		3.135	V_{DD}	V
		for 2.5 V I/O		2.375	2.625	V
V_{OH}	Output HIGH Voltage	for 3.3 V I/O, I_{OH} = –4.0 mA		2.4	–	V
		for 2.5 V I/O, I_{OH} = –1.0 mA		2.0	–	V
V_{OL}	Output LOW Voltage	for 3.3 V I/O, I_{OL} = 8.0 mA		–	0.4	V
		for 2.5 V I/O, I_{OL} = 1.0 mA		–	0.4	V
V_{IH}	Input HIGH Voltage[15]	for 3.3 V I/O		2.0	V_{DD} + 0.3 V	V
		for 2.5 V I/O		1.7	V_{DD} + 0.3 V	V
V_{IL}	Input LOW Voltage[15]	for 3.3 V I/O		–0.3	0.8	V
		for 2.5 V I/O		–0.3	0.7	V
I_X	Input Leakage Current except ZZ and MODE	GND ≤ V_I ≤ V_{DDQ}		–5	5	µA
	Input Current of MODE	Input = V_{SS}		–30	–	µA
		Input = V_{DD}		–	5	µA
	Input Current of ZZ	Input = V_{SS}		–5	–	µA
		Input = V_{DD}		–	30	µA
I_{OZ}	Output Leakage Current	GND ≤ V_I ≤ V_{DDQ}, Output Disabled		–5	5	µA
I_{DD}	V_{DD} Operating Supply Current	V_{DD} = Max, I_{OUT} = 0 mA, f = f_{MAX} = 1/t_{CYC}	7.5-ns cycle, 133 MHz	–	310	mA
I_{SB1}	Automatic CE Power down Current – TTL Inputs	Max V_{DD}, Device Deselected, V_{IN} ≥ V_{IH} or V_{IN} ≤ V_{IL}, f = f_{MAX}, inputs switching	7.5-ns cycle, 133 MHz	–	180	mA
I_{SB2}	Automatic CE Power down Current – CMOS Inputs	Max V_{DD}, Device Deselected, V_{IN} ≥ V_{DD} – 0.3 V or V_{IN} ≤ 0.3 V, f = 0, inputs static	7.5-ns cycle, 133 MHz	–	120	mA

Notes

15. Overshoot: $V_{IH(AC)}$ < V_{DD} + 1.5 V (Pulse width less than $t_{CYC}/2$), undershoot: $V_{IL(AC)}$ > –2 V (Pulse width less than $t_{CYC}/2$).
16. $T_{Power\text{-}up}$: Assumes a linear ramp from 0 V to $V_{DD(min)}$ within 200 ms. During this time V_{IH} < V_{DD} and V_{DDQ} ≤ V_{DD}.

OBSOLETE

Electrical Characteristics (continued)

Over the Operating Range

DC Electrical Characteristics (continued)

Over the Operating Range

Parameter [15, 16]	Description	Test Conditions		Min	Max	Unit
I_{SB3}	Automatic CE Power down Current – CMOS Inputs	Max V_{DD}, Device Deselected, $V_{IN} \geq V_{DDQ} - 0.3$ V or $V_{IN} \leq 0.3$ V, $f = f_{MAX}$, inputs switching	7.5-ns cycle, 133 MHz	–	180	mA
I_{SB4}	Automatic CE Power down Current – TTL Inputs	Max V_{DD}, Device Deselected, $V_{IN} \geq V_{DD} - 0.3$ V or $V_{IN} \leq 0.3$ V, $f = 0$, inputs static	7.5-ns cycle, 133 MHz	–	135	mA

Capacitance

Parameter [17]	Description	Test Conditions	100-pin TQFP Max	165-ball FBGA Max	Unit
C_{IN}	Input capacitance	$T_A = 25$ °C, $f = 1$ MHz, $V_{DD} = 3.3$ V, $V_{DDQ} = 2.5$ V	6.5	7	pF
C_{CLK}	Clock input capacitance		3	7	pF
C_{IO}	Input/Output capacitance		5.5	6	pF

Thermal Resistance

Parameter [17]	Description	Test Conditions	100-pin TQFP Package	165-ball FBGA Package	Unit
Θ_{JA}	Thermal resistance (junction to ambient)	Test conditions follow standard test methods and procedures for measuring thermal impedance, per EIA/JESD51.	25.21	20.8	°C/W
Θ_{JC}	Thermal resistance (junction to case)		2.28	3.2	°C/W

Note
17. Tested initially and after any design or process change that may affect these parameters.

OBSOLETE

AC Test Loads and Waveforms

Figure 4. AC Test Loads and Waveforms

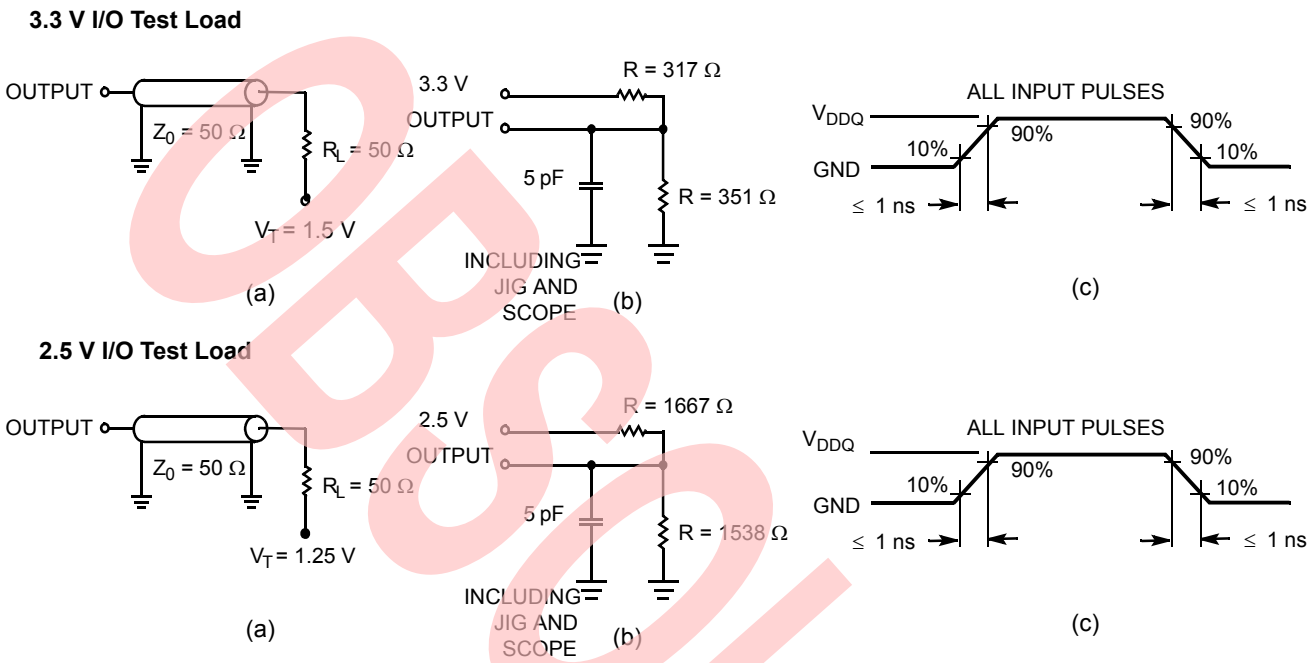

OBSOLETE

Switching Characteristics

Over the Operating Range

Parameter [18, 19]	Description	-133		Unit
		Min	Max	
t_{POWER}	V_{DD}(typical) to the first access [20]	1	–	ms
Clock				
t_{CYC}	Clock cycle time	7.5	–	ns
t_{CH}	Clock HIGH	2.5	–	ns
t_{CL}	Clock LOW	2.5	–	ns
Output Times				
t_{CDV}	Data output valid after CLK rise	–	6.5	ns
t_{DOH}	Data output hold after CLK rise	2.5	–	ns
t_{CLZ}	Clock to low Z [21, 22, 23]	2.5	–	ns
t_{CHZ}	Clock to high Z [21, 22, 23]	–	3.8	ns
t_{OEV}	$\overline{OE}$ LOW to output valid	–	3.0	ns
t_{OELZ}	$\overline{OE}$ LOW to output low Z [21, 22, 23]	0	–	ns
t_{OEHZ}	$\overline{OE}$ HIGH to output high Z [21, 22, 23]	–	3.0	ns
Setup Times				
t_{AS}	Address setup before CLK rise	1.5	–	ns
t_{ADS}	$\overline{ADSP}$, $\overline{ADSC}$ setup before CLK rise	1.5	–	ns
t_{ADVS}	$\overline{ADV}$ setup before CLK rise	1.5	–	ns
t_{WES}	$\overline{GW}$, $\overline{BWE}$, $\overline{BW_X}$ setup before CLK rise	1.5	–	ns
t_{DS}	Data input setup before CLK rise	1.5	–	ns
t_{CES}	Chip enable setup	1.5	–	ns
Hold Times				
t_{AH}	Address hold after CLK rise	0.5	–	ns
t_{ADH}	$\overline{ADSP}$, $\overline{ADSC}$ hold after CLK rise	0.5	–	ns
t_{WEH}	$\overline{GW}$, $\overline{BWE}$, $\overline{BW_X}$ hold after CLK rise	0.5	–	ns
t_{ADVH}	$\overline{ADV}$ hold after CLK rise	0.5	–	ns
t_{DH}	Data input hold after CLK rise	0.5	–	ns
t_{CEH}	Chip enable hold after CLK rise	0.5	–	ns

OBSOLETE

Notes

18. Timing reference level is 1.5 V when V_{DDQ} = 3.3 V and is 1.25 V when V_{DDQ} = 2.5 V.
19. Test conditions shown in (a) of Figure 4 on page 21 unless otherwise noted.
20. This part has a voltage regulator internally; t_{POWER} is the time that the power must be supplied above $V_{DD(minimum)}$ initially, before a read or write operation can be initiated.
21. t_{CHZ}, t_{CLZ} ,t_{OELZ}, and t_{OEHZ} are specified with AC test conditions shown in part (b) of Figure 4 on page 21. Transition is measured ±200 mV from steady-state voltage.
22. At any given voltage and temperature, t_{OEHZ} is less than t_{OELZ} and t_{CHZ} is less than t_{CLZ} to eliminate bus contention between SRAMs when sharing the same data bus. These specifications do not imply a bus contention condition, but reflect parameters guaranteed over worst case user conditions. Device is designed to achieve High Z prior to Low Z under the same system conditions.
23. This parameter is sampled and not 100% tested.

Timing Diagrams

Figure 5. Read Cycle Timing [24]

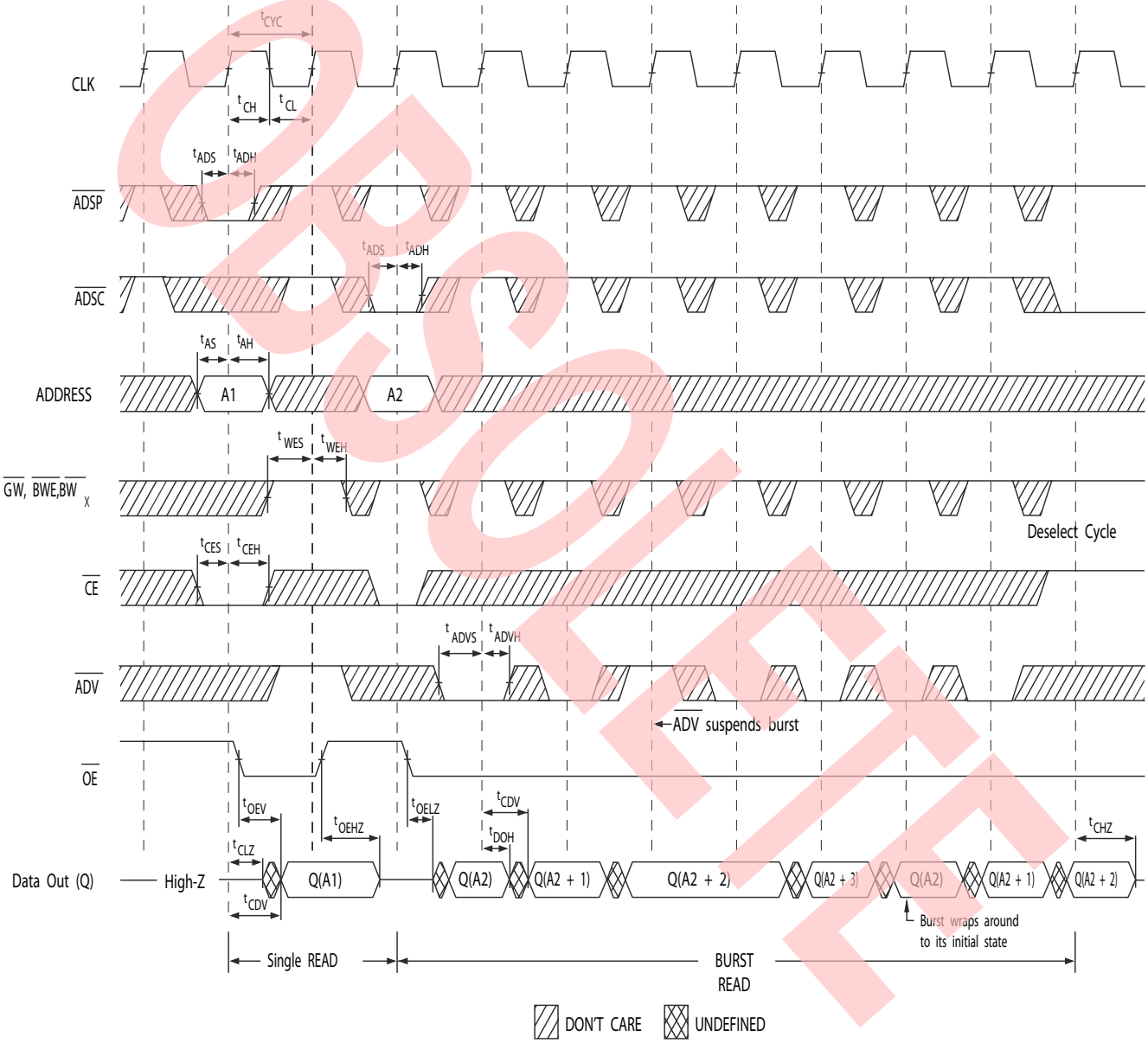

OBSOLETE

Note
24. On this diagram, when $\overline{CE}$ is LOW: $\overline{CE}_1$ is LOW, CE_2 is HIGH and $\overline{CE}_3$ is LOW. When $\overline{CE}$ is HIGH: $\overline{CE}_1$ is HIGH or CE_2 is LOW or $\overline{CE}_3$ is HIGH.

Timing Diagrams (continued)

Figure 6. Write Cycle Timing [25, 26]

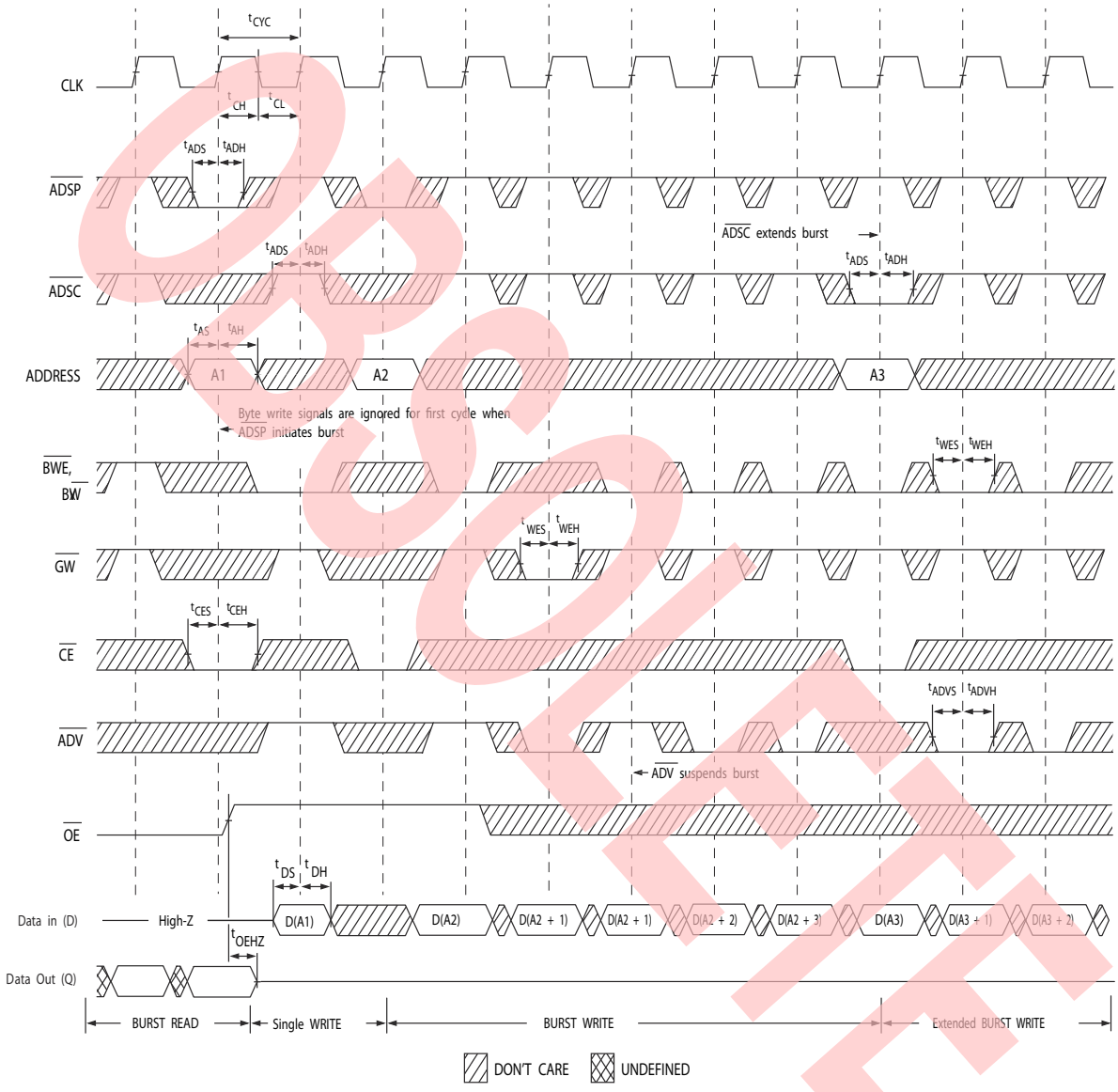

OBSOLETE

Notes
25. On this diagram, when $\overline{CE}$ is LOW: $\overline{CE}_1$ is LOW, CE_2 is HIGH and $\overline{CE}_3$ is LOW. When $\overline{CE}$ is HIGH: $\overline{CE}_1$ is HIGH or CE_2 is LOW or $\overline{CE}_3$ is HIGH.
26. Full width write can be initiated by either $\overline{GW}$ LOW; or by $\overline{GW}$ HIGH, $\overline{BWE}$ LOW and $\overline{BW}_X$ LOW

Timing Diagrams (continued)

Figure 7. Read/Write Cycle Timing [27, 28, 29]

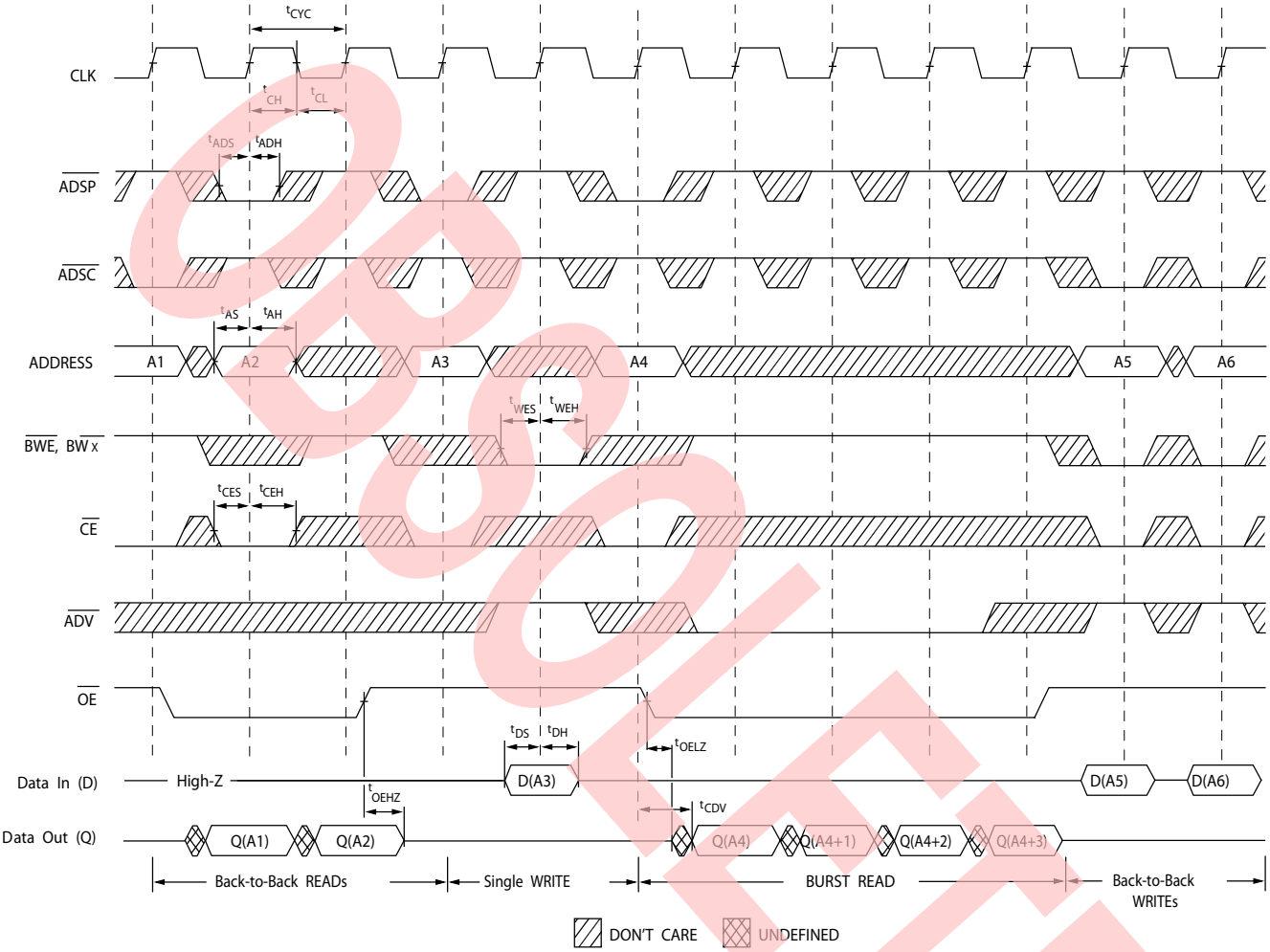

OBSOLETE

Note
27. On this diagram, when $\overline{CE}$ is LOW: $\overline{CE}_1$ is LOW, CE_2 is HIGH and $\overline{CE}_3$ is LOW. When $\overline{CE}$ is HIGH: $\overline{CE}_1$ is HIGH or CE_2 is LOW or $\overline{CE}_3$ is HIGH.
28. The data bus (Q) remains in high Z following a WRITE cycle, unless a new read access is initiated by $\overline{ADSP}$ or $\overline{ADSC}$.
29. $\overline{GW}$ is HIGH.

Timing Diagrams (continued)

Figure 8. ZZ Mode Timing [30, 31]

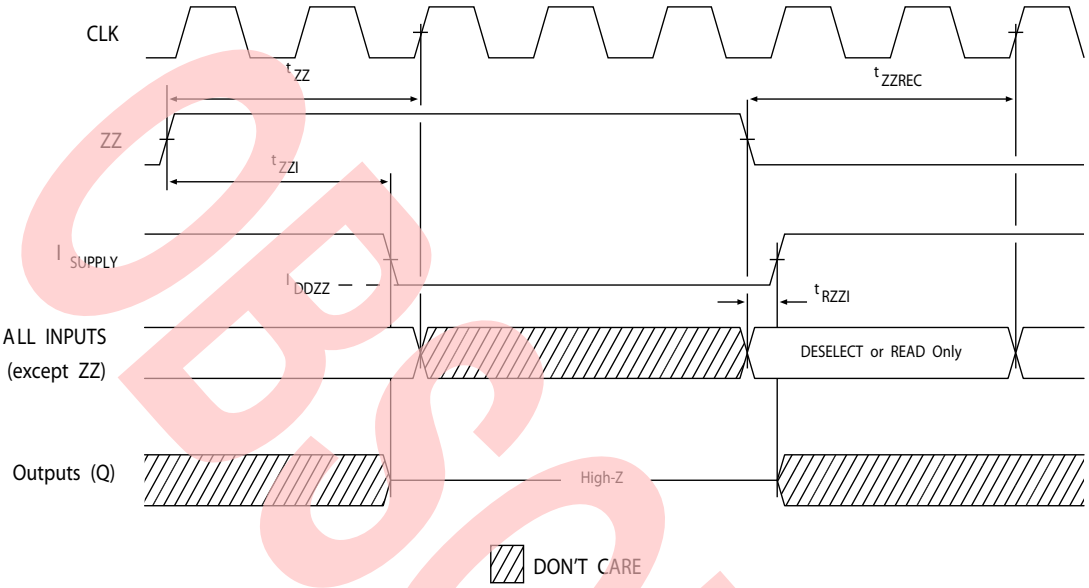

OBSOLETE

Notes
30. Device must be deselected when entering ZZ mode. See Cycle Descriptions table for all possible signal conditions to deselect the device.
31. DQs are in high Z when exiting ZZ sleep mode.

Ordering Information

Cypress offers other versions of this type of product in different configurations and features. The following table contains only the list of parts that are currently available.

For a complete listing of all options, visit the Cypress website at www.cypress.com and refer to the product summary page at http://www.cypress.com/products, or contact your local sales representative.

Cypress maintains a worldwide network of offices, solution centers, manufacturer's representatives and distributors. To find the office closest to you, visit us at http://www.cypress.com/go/datasheet/offices.

Speed (MHz)	Ordering Code	Package Diagram	Part and Package Type
133	CY7C1441AV33-133AXC	51-85050	100-pin TQFP (14 × 20 × 1.4 mm) Pb-free
	CY7C1441AV33-133AXI	51-85050	100-pin TQFP (14 × 20 × 1.4 mm) Pb-free
	CY7C1441AV33-133BZI	51-85165	165-ball FBGA (15 × 17 × 1.4 mm)
	CY7C1441AV33-133BZXI	51-85165	165-ball FBGA (15 × 17 × 1.4 mm) Pb-free

Ordering Code Definitions

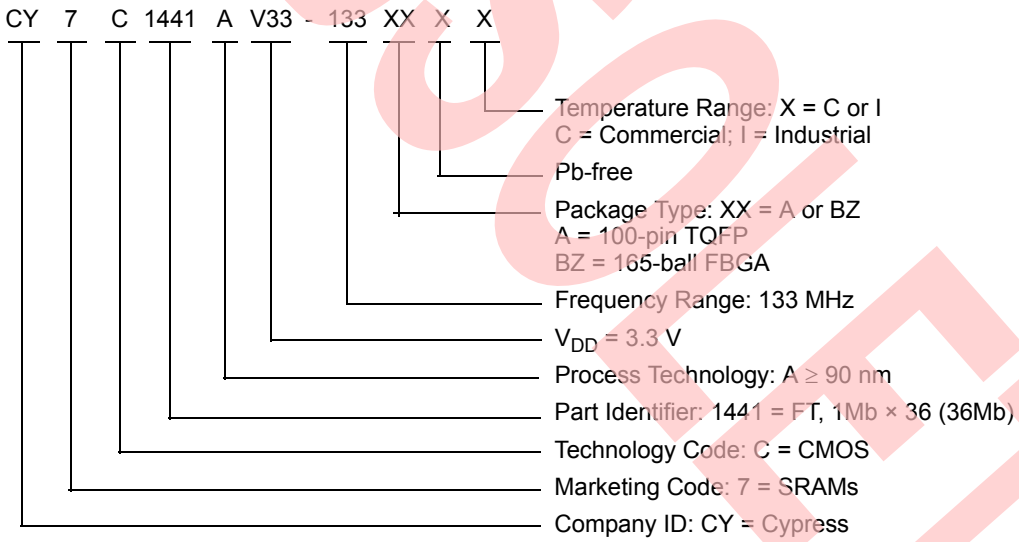

OBSOLETE

Package Diagrams

Figure 9. 100-pin TQFP (14 × 20 × 1.4 mm) A100RA Package Outline, 51-85050

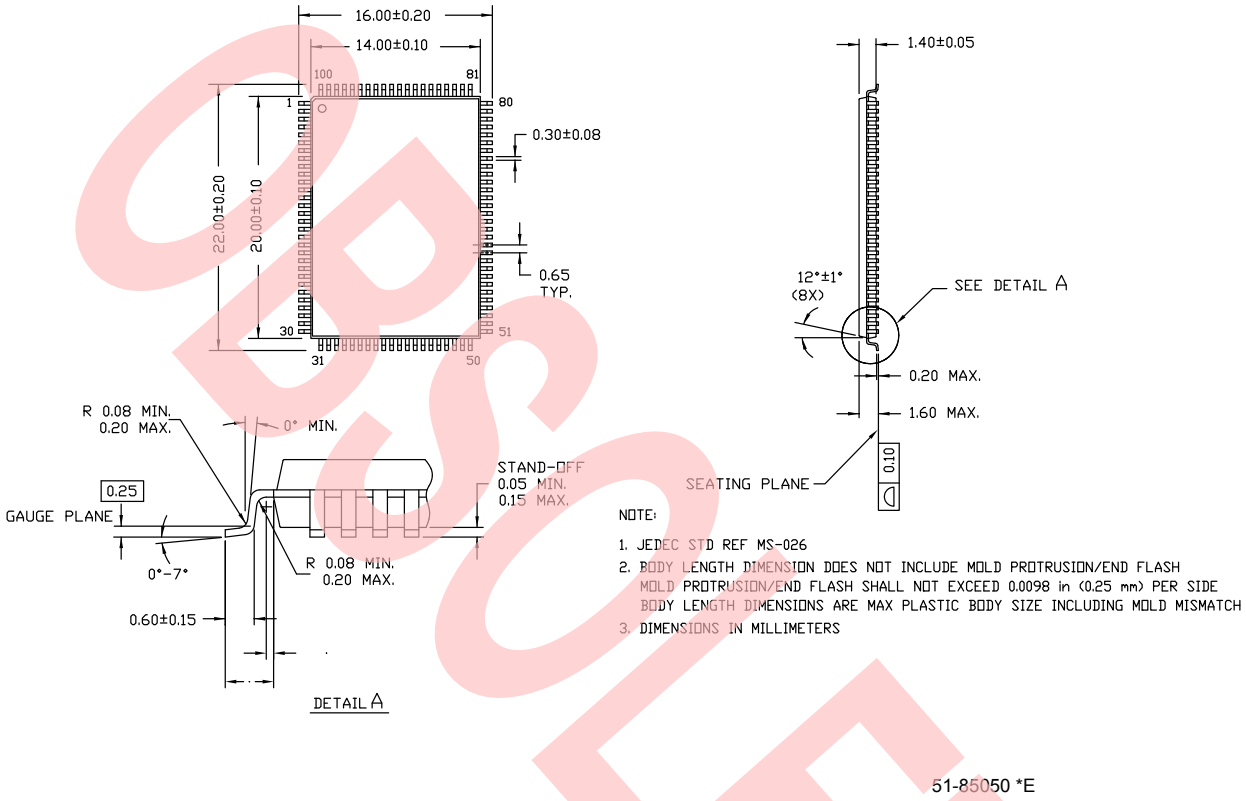

OBSOLETE

Package Diagrams (continued)

Figure 10. 165-ball FBGA (15 × 17 × 1.40 mm) (0.45 Ball Diameter) Package Outline, 51-85165

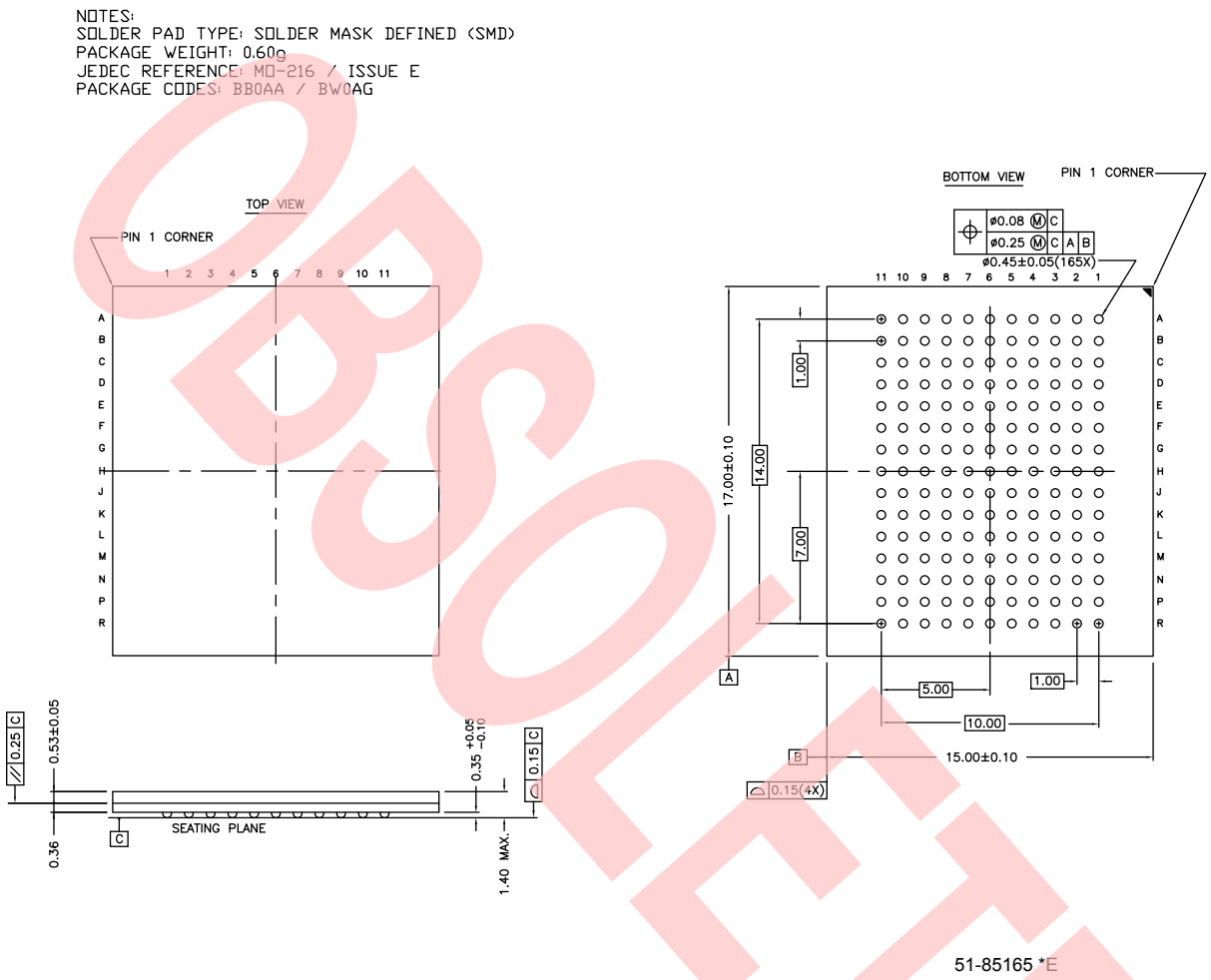

OBSOLETE

Acronyms

Acronym	Description
CMOS	Complementary metal oxide semiconductor
FBGA	Fine-Pitch Ball Grid Array
I/O	Input/Output
JTAG	Joint Test Action Group
LSB	Least Significant Bit
MSB	Most Significant Bit
$\overline{OE}$	Output Enable
SRAM	Static Random Access Memory
TAP	Test Access Port
TCK	Test Clock
TDI	Test Data-In
TDO	Test Data-Out
TMS	Test Mode Select
TQFP	Thin Quad Flat Pack

Document Conventions

Units of Measure

Symbol	Unit of Measure
°C	degree Celsius
MHz	megahertz
µA	microampere
mA	milliampere
mm	millimeter
ms	millisecond
ns	nanosecond
Ω	ohm
%	percent
pF	picofarad
V	volt
W	watt

OBSOLETE

Document History Page

Document Title: CY7C1441AV33, 36-Mbit (1M × 36) Flow-Through SRAM Document Number: 38-05357				
Rev.	**ECN No.**	**Orig. of Change**	**Submission Date**	**Description of Change**
**	124459	CJM	03/06/03	New data sheet. Part number changed from previous revision. New and old part number differ by the letter “A”.
*A	254910	SYT	See ECN	Updated Logic Block Diagram – CY7C1441AV33. Updated Logic Block Diagram – CY7C1443AV33. Updated Logic Block Diagram – CY7C1447AV33. Updated Identification Register Definitions (Added Note 12 (32-Bit Vendor I.D Code changed)). Added Boundary Scan Order Updated Electrical Characteristics (Updated DC Electrical Characteristics (Updated the values of I_X , I_{DD}, I_{SB1}, I_{SB2}, I_{SB3}, and I_{SB4} parameters)). Updated Switching Characteristics (Added t_{POWER} parameter and its details). Modified Timing Diagrams. Updated Package Diagrams (Removed 119-ball PBGA Package, changed 165-ball FBGA (15 × 17 × 1.20 mm) BB165C (spec 51-85165 **) to 165-ball FBGA (15 × 17 × 1.40 mm) BB165C (spec 51-85165 *A), changed 209-Lead PBGA (14 × 22 × 2.20 mm) BG209 (spec 51-85143) to 209-ball FBGA (14 × 22 × 1.76 mm) BB209A (spec 51-85167)).
*B	300131	SYT	See ECN	Updated Features (Removed 150 MHz and 117 MHz frequencies related information). Updated Selection Guide (Removed 150 MHz and 117 MHz frequencies related information). Updated Electrical Characteristics (Updated DC Electrical Characteristics (Removed 150 MHz and 117 MHz frequencies related information)). Updated Thermal Resistance (Replaced values of Θ_{JA} and Θ_{JC} parameters from TBD to 25.21 °C/W and 2.58 °C/W respectively for 100-pin TQFP package). Updated Switching Characteristics (Removed 150 MHz and 117 MHz frequencies related information). Updated Ordering Information (Added Pb-free information for 100-pin TQFP, 165-ball FBGA and 209-ball FBGA Packages, added ‘Pb-free BG and BZ packages availability’ comment below the Ordering Information).
*C	320813	SYT	See ECN	Updated Pin Configurations (Changed Hi9 pin from V_{SSQ} to V_{SS} for 209-ball FBGA). Updated Electrical Characteristics (Changed the test condition for V_{OL} parameter from V_{DD} = Min. to V_{DD} = Max., replaced the TBD’s with their respective values for I_{DD}, I_{SB1}, I_{SB2}, I_{SB3} and I_{SB4} parameters). Updated Thermal Resistance (Replaced values of Θ_{JA} and Θ_{JC} parameters from TBD to respective Thermal Values for 165-ball FBGA and 209-ball FBGA Packages). Updated Capacitance (Changed values of C_{IN}, C_{CLK} and $C_{I/O}$ parameters to 6.5 pF, 3 pF and 5.5 pF from 5 pF, 5 pF and 7 pF for 100-pin TQFP Package) Updated Ordering Information (Removed “Pb-free BG and BZ packages availability” comment below the Ordering Information).

OBSOLETE

Document History Page (continued)

Document Title: CY7C1441AV33, 36-Mbit (1M × 36) Flow-Through SRAM Document Number: 38-05357				
Rev.	**ECN No.**	**Orig. of Change**	**Submission Date**	**Description of Change**
*D	331551	SYT	See ECN	Updated Pin Configurations (Modified Address Expansion balls in the pinouts for 165-ball FBGA and 209-ball BGA Packages as per JEDEC standards). Updated Pin Definitions. Updated Functional Overview (Updated ZZ Mode Electrical Characteristics (Changed maximum value of I_{DDZZ} parameter from TBD to 100 mA)). Updated Operating Range (Added Industrial Temperature Range). Updated Electrical Characteristics (Updated test conditions for V_{OL} and V_{OH} parameters, changed maximum value of I_{SB2} parameter from 100 mA to 120 mA, changed maximum value of I_{SB4} parameter from 110 mA to 135 mA respectively). Updated Capacitance (Changed values of C_{IN}, C_{CLK} and $C_{I/O}$ parameters to 7 pF, 7 pF and 6 pF from 5 pF, 5 pF and 7 pF for 165-ball FBGA Package). Updated Ordering Information (By shading and unshading MPNs as per availability).
*E	417547	RXU	See ECN	Changed status from Preliminary to Final. Changed address of Cypress Semiconductor Corporation on Page# 1 from "3901 North First Street" to "198 Champion Court". Updated Electrical Characteristics (Updated Note 16 (Changed test condition from $V_{IH} \leq V_{DD}$ to $V_{IH} < V_{DD}$), changed "Input Load Current except ZZ and MODE" to "Input Leakage Current except ZZ and MODE", changed minimum value of I_X parameter (corresponding to Input current of MODE (Input = V_{SS})) from –5 µA to –30 µA, changed maximum value of I_X parameter (corresponding to Input current of MODE (Input = V_{DD})) from 30 µA to 5 µA respectively, changed minimum value of I_X parameter (corresponding to Input current of ZZ (Input = V_{SS})) from –30 µA to –5 µA, changed maximum value of I_X parameter (corresponding to Input current of ZZ (Input = V_{DD})) from 5 µA to 30 µA respectively). Updated Ordering Information (Updated part numbers, replaced Package Name column with Package Diagram in the Ordering Information table). Updated Package Diagrams: 51-85050 – Changed revision from *A to *B.
*F	473650	VKN	See ECN	Updated Maximum Ratings (Added the Maximum Rating for Supply Voltage on V_{DDQ} Relative to GND). Updated TAP AC Switching Characteristics (Changed minimum value of t_{TH} and t_{TL} parameters from 25 ns to 20 ns, changed maximum value of t_{TDOV} parameter from 5 ns to 10 ns). Updated Ordering Information (Updated part numbers).
*G	2447027	VKN / AESA	See ECN	Updated Logic Block diagram – CY7C1447AV33 (Corrected typo). Updated Ordering Information (Corrected typo in the Ordering Information table).
*H	2898501	NJY	03/24/2010	Updated Ordering Information (Removed inactive part numbers). Updated Package Diagrams: 51-85050 – Changed revision from *B to *C. 51-85165 – Changed revision from *A to *B. 51-85167 – Changed revision from ** to *A.
*I	3263570	OSN	05/23/2011	Added Ordering Code Definitions. Updated Package Diagrams: 51-85050 – Changed revision from *C to *D. Added Acronyms and Units of Measure. Updated to new template.

OBSOLETE

Document History Page (continued)

Document Title: CY7C1441AV33, 36-Mbit (1M × 36) Flow-Through SRAM Document Number: 38-05357				
Rev.	**ECN No.**	**Orig. of Change**	**Submission Date**	**Description of Change**
*J	3592981	NJY / PRIT	04/20/2012	Updated Features (Removed CY7C1443AV33, CY7C1447AV33 related information, removed 209-ball FBGA package related information). Updated Functional Description (Removed CY7C1443AV33, CY7C1447AV33 related information, removed the Note “For best-practices recommendations, please refer to the Cypress application note *System Design Guidelines* on www.cypress.com.” and its reference). Updated Selection Guide (Removed 100 MHz frequency related information). Removed Logic Block Diagram – CY7C1443AV33. Removed Logic Block Diagram – CY7C1447AV33. Updated Pin Configurations (Removed CY7C1443AV33, CY7C1447AV33 related information, removed 209-ball FBGA package related information). Updated Pin Definitions. Updated Functional Overview (Removed CY7C1443AV33, CY7C1447AV33 related information). Updated Truth Table (Removed CY7C1443AV33, CY7C1447AV33 related information). Removed Truth Table for Read/Write (Corresponding to CY7C1443AV33, CY7C1447AV33). Updated IEEE 1149.1 Serial Boundary Scan (JTAG) (Removed CY7C1443AV33, CY7C1447AV33 related information). Updated Identification Register Definitions (Removed CY7C1443AV33, CY7C1447AV33 related information). Updated Scan Register Sizes (Removed Bit Size (× 18), Bit Size (× 72) columns). Updated Boundary Scan Order (Removed CY7C1443AV33 related information). Updated Electrical Characteristics (Removed 100 MHz frequency related information). Updated Capacitance (Removed 209-ball FBGA package related information). Updated Thermal Resistance (Removed 209-ball FBGA package related information). Updated Switching Characteristics (Removed 100 MHz frequency related information). Updated Package Diagrams (spec 51-85165 (Changed revision from *B to *D), removed 209-ball FBGA package related information (spec 51-85167)). Replaced all instances of IO with I/O across the document.
*K	4010294	PRIT	05/24/2013	No technical updates. Completing Sunset Review.
*L	4409607	PRIT	06/16/2014	Updated Package Diagrams: spec 51-85050 – Changed revision from *D to *E. Completing Sunset Review.
*M	4571917	PRIT	12/29/2014	Updated Functional Description: Added “For a complete list of related documentation, click here.” at the end. Updated Package Diagrams: spec 51-85165 – Changed revision from *D to *E.
*N	5859284	AJU	08/21/2017	Obsolete document. Completing Sunset Review.

OBSOLETE

Sales, Solutions, and Legal Information

Worldwide Sales and Design Support

Cypress maintains a worldwide network of offices, solution centers, manufacturer's representatives, and distributors. To find the office closest to you, visit us at Cypress Locations.

Products

Automotive	cypress.com/go/automotive
Clocks & Buffers	cypress.com/go/clocks
Interface	cypress.com/go/interface
Lighting & Power Control	cypress.com/go/powerpsoc
Memory	cypress.com/go/memory
PSoC	cypress.com/go/psoc
Touch Sensing	cypress.com/go/touch
USB Controllers	cypress.com/go/USB
Wireless/RF	cypress.com/go/wireless

PSoC® Solutions

psoc.cypress.com/solutions

PSoC 1 | PSoC 3 | PSoC 4 | PSoC 5LP

Cypress Developer Community

Community | Forums | Blogs | Video | Training

Technical Support

cypress.com/go/support

OBSOLETE

© Cypress Semiconductor Corporation, 2003-2017. The information contained herein is subject to change without notice. Cypress Semiconductor Corporation assumes no responsibility for the use of any circuitry other than circuitry embodied in a Cypress product. Nor does it convey or imply any license under patent or other rights. Cypress products are not warranted nor intended to be used for medical, life support, life saving, critical control or safety applications, unless pursuant to an express written agreement with Cypress. Furthermore, Cypress does not authorize its products for use as critical components in life-support systems where a malfunction or failure may reasonably be expected to result in significant injury to the user. The inclusion of Cypress products in life-support systems application implies that the manufacturer assumes all risk of such use and in doing so indemnifies Cypress against all charges.

Any Source Code (software and/or firmware) is owned by Cypress Semiconductor Corporation (Cypress) and is protected by and subject to worldwide patent protection (United States and foreign), United States copyright laws and international treaty provisions. Cypress hereby grants to licensee a personal, non-exclusive, non-transferable license to copy, use, modify, create derivative works of, and compile the Cypress Source Code and derivative works for the sole purpose of creating custom software and or firmware in support of licensee product to be used only in conjunction with a Cypress integrated circuit as specified in the applicable agreement. Any reproduction, modification, translation, compilation, or representation of this Source Code except as specified above is prohibited without the express written permission of Cypress.

Disclaimer: CYPRESS MAKES NO WARRANTY OF ANY KIND, EXPRESS OR IMPLIED, WITH REGARD TO THIS MATERIAL, INCLUDING, BUT NOT LIMITED TO, THE IMPLIED WARRANTIES OF MERCHANTABILITY AND FITNESS FOR A PARTICULAR PURPOSE. Cypress reserves the right to make changes without further notice to the materials described herein. Cypress does not assume any liability arising out of the application or use of any product or circuit described herein. Cypress does not authorize its products for use as critical components in life-support systems where a malfunction or failure may reasonably be expected to result in significant injury to the user. The inclusion of Cypress' product in a life-support systems application implies that the manufacturer assumes all risk of such use and in doing so indemnifies Cypress against all charges.

Use may be limited by and subject to the applicable Cypress software license agreement.

i486 is a trademark, and Intel and Pentium are registered trademarks of Intel Corporation. PowerPC is a trademark of IBM Corporation. All products and company names mentioned in this document may be the trademarks of their respective holders.