Please note that Cypress is an Infineon Technologies Company.
The document following this cover page is marked as “Cypress” document as this is the company that originally developed the product. Please note that Infineon will continue to offer the product to new and existing customers as part of the Infineon product portfolio.

Continuity of document content
The fact that Infineon offers the following product as part of the Infineon product portfolio does not lead to any changes to this document. Future revisions will occur when appropriate, and any changes will be set out on the document history page.

Continuity of ordering part numbers
Infineon continues to support existing part numbers. Please continue to use the ordering part numbers listed in the datasheet for ordering.

CY39C326

6 MHz Synchronous Rectification Buck-Boost DC/DC Converter IC

Description

The CY39C326 is a high efficiency, low noise synchronous, Buck-boost DC/DC converter designed for powering the radio frequency power amplifiers (RFPA) in 3G/GSM mobile handsets and other mobile applications.

Features

- High efficiency : Up to 93 %
- Input voltage range : 2.5 V to 5.5 V
- Adjustable output voltage range : 0.8 V to 5.0 V
- Maximum output current
  - (Buck, PWM mode)
    - : 1200 mA (V_{IN} = 5.0 V to 5.5 V, at Vo=5.0 V)
    - : 1200 mA (V_{IN} = 3.6 V to 5.5 V, at Vo=3.6 V)
    - : 1200 mA (V_{IN} = 3.3 V to 5.5 V, at Vo=3.3 V)
  - (Boost, PWM mode)
    - : 900 mA (V_{IN} = 3.7 V to 5.0 V, at Vo=5.0 V)
    - : 700 mA (V_{IN} = 2.5 V to 3.6 V, at Vo=3.6 V)
    - : 800 mA (V_{IN} = 2.5 V to 3.3 V, at Vo=3.3 V)
  - (Buck, Power save mode, ILIMSEL=H)
    - : 600 mA (V_{IN} = 5.0 V to 5.5 V, at Vo=5.0 V)
    - : 600 mA (V_{IN} = 3.6 V to 5.5 V, at Vo=3.6 V)
    - : 600 mA (V_{IN} = 3.3 V to 5.5 V, at Vo=3.3 V)
  - (Boost, Power save mode, ILIMSEL=H)
    - : 500 mA (V_{IN} = 3.7 V to 5.0 V, at Vo=5.0 V)
    - : 400 mA (V_{IN} = 2.5 V to 3.6 V, at Vo=3.6 V)
    - : 500 mA (V_{IN} = 2.5 V to 3.3 V, at Vo=3.3 V)
- Quiescent current : 50 µA
- 6 MHz PWM operation allows 0.5 µH small form inductor
- Automatic Transition between Buck mode and boost mode
- Power save Mode for improved efficiency at light load current
- Selectable output voltage with external resistor
- Built-in Over temperature protection circuit
- Built-in Under voltage lockout protection circuit
- Package: WL-CSP (20 pin 0.4 mm-ball-pitch 2.15 × 1.94 mm)

Applications

- Products that use 1-cell lithium batteries for the power supply
- RF power amplifier
- Cell-phone
- RF-PC card and PDA

Note: This product supports the web-based design simulation tool, Easy DesignSim. It can easily select external components and can display useful information. Please access from http://cypress.transim.com/login.aspx

Contents

Description 1
Features 1
Applications 1
1. Pin Assignments 3
2. Pin Descriptions 3
3. Block Diagram 4
4. Function 4
5. Absolute Maximum Ratings 6
6. Recommended Operating Conditions 6
7. Electrical Characteristics 8
8. Typical Applications Circuit (RF Power Amplifier) 9
9. Application Notes 10
10. Inductor Selection 12
11. Input Capacitor Selection 12
12. Output Capacitor Selection 12
13. Thermal Information 12
14. Notes on Board Layout 13
15. Example of Standard Operation Characteristics 14
16. Usage Precaution 17
17. Notes on Mounting 17
18. Ordering Information 18
19. RoHS Compliance Information 18
20. Package Dimensions 19
21. Major Changes 20
Document History 21
Sales, Solutions, and Legal Information 22

1. Pin Assignments

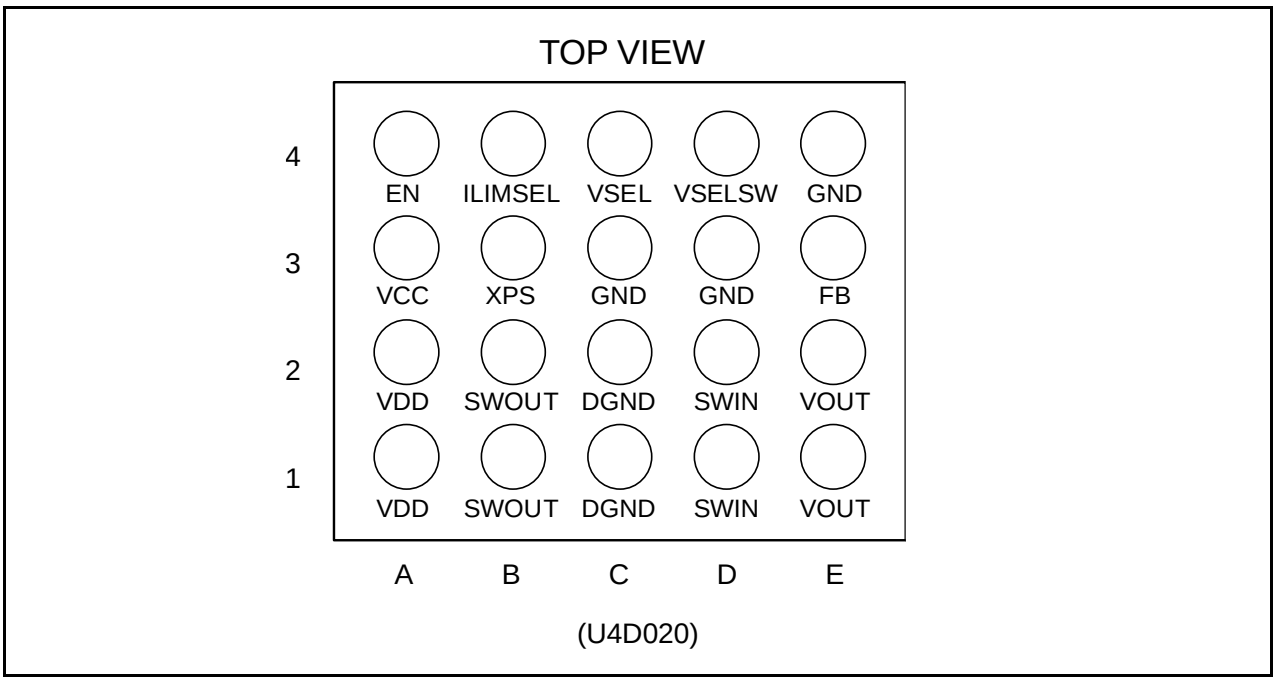

2. Pin Descriptions

Pin No.	Pin Name	I/O	Description
A4	EN	I	IC Enable input pin (H: Enable, L: Shutdown)
E3	FB	I	Voltage feedback pin
C3, D3, E4	GND	-	Control / Logic ground pins
B4	ILIMSEL	I	Inductor peak current limit pin
B1, B2	SWOUT	I	Connection pins for Inductor
D1, D2	SWIN	I	Connection pins for Inductor
C1, C2	DGND	-	Power ground pins
C4	VSEL	I	Output voltage select pin (H: Using R3 L: No using R3)
D4	VSELSW	-	Connection pin for output voltage setting resistor R3
A1, A2	VDD	I	Electric power input pin for DCDC converter output voltage
A3	VCC	I	Electric power input pin for IC control block
B3	XPS	I	Power save mode pin (H: PWM mode, L: Power save mode)
E1, E2	VOUT	O	Buck-boost converter output pins

3. Block Diagram

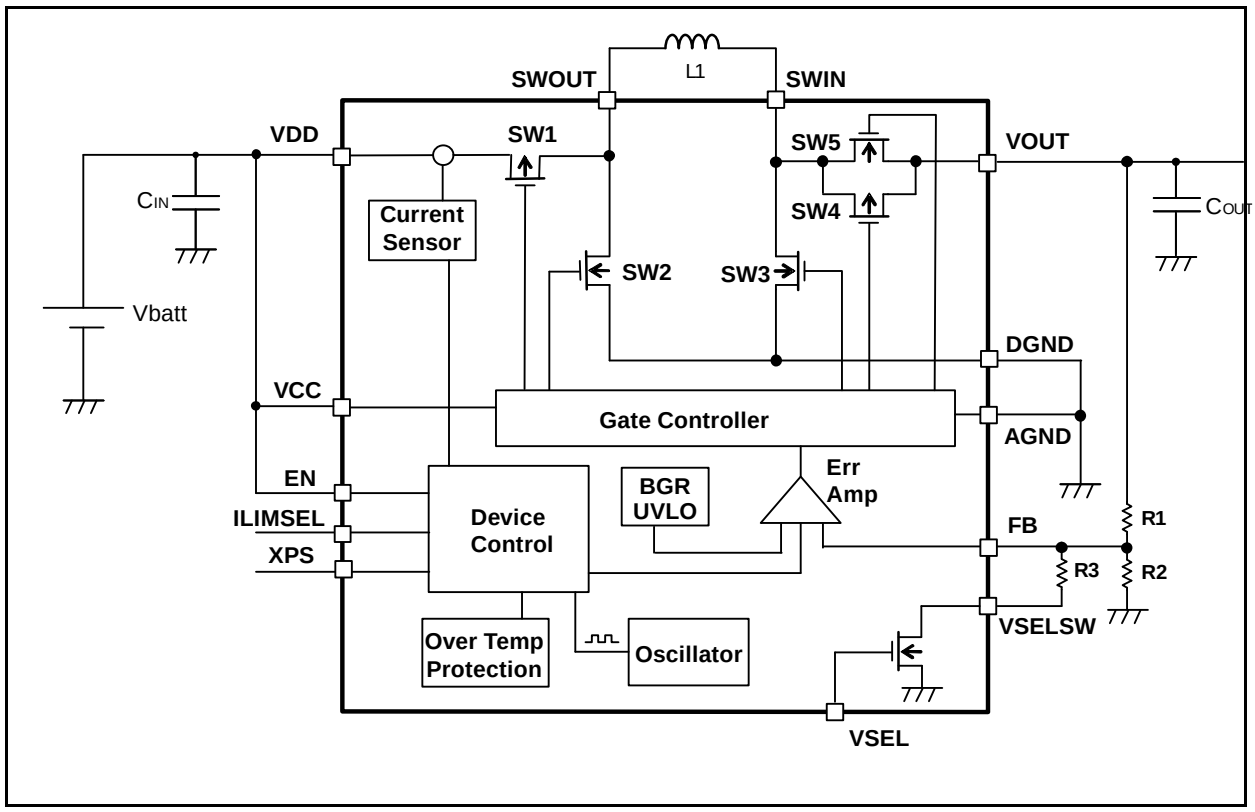

4. Function

(1) Gate Controller

It is controlled the synchronous rectification operation of built-in 2-P-ch MOS FETs and 2-N-ch MOS FETs according to frequency (6 MHz) set with a oscillator at the normal operation.

(2) Error Amp & phase compensation circuit

This compares the feedback voltage and the reference voltage (VREF). This IC contains the phase compensation circuit which optimizes the IC operation. Therefore, it is unnecessary to consideration of the phase compensation circuit, and external parts for the phase compensation.

(3) Band gap reference circuit

A high accuracy reference voltage is generated with BGR (band gap reference) circuit.

(4) Oscillator

The internal oscillator output a 6 MHz clock signal to set a switching frequency.

(5) Over temperature protection circuit

The over temperature protection circuit is built-in as a protection circuit. When junction temperature reaches +125 °C, the over temperature protection circuit turns off all N-ch MOS FETs and P-ch MOS FETs. Also, when the junction temperature falls to +110 °C, this IC operates normally.

(6) Inductor peak current limit circuit (Current Sensor + Device Control)

The inductor peak current limit circuit detects the current (I_{LX}) which flows from built-in P-ch MOS FET connected to VDD into an external inductor and limits the inductor peak current (I_{PK}).

(7) Power save mode operation

Power save mode is used to improve efficiency at the light load. By setting the XPS pin to "L" level, power save mode is set and the operation is performed in PWM mode or PFM mode depending on the load current. At this time, if the load current is low, this IC operates with PFM (PulseFrequency Modulation). It should be used above V_{OUT} = 0.8 V. If the output voltage becomes lower than the setting value at the light load, switching is performed several times and the output voltage rises. If the output voltage reaches the setting value, it changes to the stop state, all of the four FETs are turned off, and the switching loss and the dissipation power for the circuit are suppressed.
Consumption current in stop state at the power save mode becomes about 50 µA.

■ **Function Table**

Mode	XPS	ILIMSEL	Input Voltage Range [V]		Output Voltage Range [V]		Inductor Peak Current Limit (I_{PK}) [A]
			Min	Max	Min	Max	
PWM mode	H	L	2.5	5.5	0.8	5.0	3.1
Power save mode	L	H					1.3
		L					0.49

Note: Input of (XPS, ILIMSEL = H, H) is prohibited.

(8) EN pin

When the EN pin is set to "H" level, the device operation is enabled. When the EN pin is set to GND, the device is switched to shutdown mode.

When the EN pin is set to "L" level, the device is switched to shutdown mode.
In shutdown mode, the regulator stops switching, all FET switches are turned off, and the load is disconnected from the input.

(9) VSEL pin

CY39C326 has a function to change the output voltage with the VSEL pin and additional resistance.
For details of the output voltage settings, see the section 2. of "Programming the Output Voltage" in 9. Application .

(10) Buck-Boost operations

CY39C326 operates in Buck or Boost mode by monitoring the VCC/VOUT voltage with a newly developed PWM controller.
The transition between buck and boost mode is smooth and the efficiency is high.

During Buck mode (VCC > VOUT), SW1 and SW2 perform switching while SW3 is fixed to OFF and SW4 and 5 are fixed to ON.
During Boost mode (VCC < VOUT), SW3, SW4 and SW5 perform switching while SW1 is fixed to ON and SW2 is fixed to OFF.

The voltage values of VCC and VDD at the switching between buck and boost vary depending on the load current, the environmental temperature and the process variations.

(11) Startup circuit

CY39C326 has the soft-start function to prevent rush current upon turning on of the power.
The startup time is approximately 100 µs.

5. Absolute Maximum Ratings

Parameter	Symbol	Condition	Rating		Unit
			Min	Max	
Power supply voltage	V_{MAX}	VDD, VCC	-0.3	+7.0	V
Signal input voltage	V_{INMAX}	EN, XPS, VSEL, ILIMSEL	-0.3	V_{DD} + 0.3	V
Power dissipation	P_D	Ta ≤ +25°C	-	1080	mW
Storage temperature	T_{STG}	-	-65	+150	°C
ESD Voltage	V_{ESDH}	Human Body Model (100 pF, 1.5 kΩ)	-2000	+2000	V
	V_{ESDM}	Machine Model (200 pF, 0 Ω)	-200	+200	V
	V_{ESDC}	Charged device model	-1000	+1000	V
Maximum junction temperature	$Tj\text{-}_{MAX}$	-	-	+95	°C

WARNING:

Semiconductor devices may be permanently damaged by application of stress (including, without limitation, voltage, current or temperature) in excess of absolute maximum ratings. Do not exceed any of these ratings.

6. Recommended Operating Conditions

Parameter	Symbol	Condition	Value			Unit
			Min	Typ	Max	
Power supply voltage	V_{DD}	VDD, VCC	2.5(*1)	3.7	5.5(*1)	V
Signal input voltage	V_{IDD}	EN, XPS, VSEL, ILIMSEL	0.0	-	VDD	V
Output current (Buck) PWM mode	Io (Max1)	V_{IN} = 5.5 V, Vo = 5.0 V, XPS = H, ILIMSEL = L	-	-	1200	mA
	Io (Max2)	V_{IN} = 5.5 V, Vo = 4.4 V, XPS = H, ILIMSEL = L	-	-	1200	mA
	Io (Max3)	V_{IN} = 5.5 V, Vo = 3.6 V, XPS = H, ILIMSEL = L	-	-	1200	mA
		V_{IN} = 4.2 V, Vo = 3.6 V, XPS = H, ILIMSEL = L	-	-	1200	mA
	Io (Max4)	V_{IN} = 5.5 V, Vo = 3.3 V, XPS = H, ILIMSEL = L	-	-	1200	mA
		V_{IN} = 3.7 V, Vo = 3.3 V, XPS = H, ILIMSEL = L	-	-	1200	mA
	Io (Max5)	V_{IN} = 5.5 V, Vo = 2.0 V, XPS = H, ILIMSEL = L	-	-	1200	mA
		V_{IN} = 3.7 V, Vo = 2.0 V, XPS = H, ILIMSEL = L	-	-	1200	mA
		V_{IN} = 2.5 V, Vo =2.0 V, XPS = H, ILIMSEL = L	-	-	1200	mA
	Io (Max6)	V_{IN} = 5.5 V, Vo = 1.2 V, XPS = H, ILIMSEL = L	-	-	700	mA
		V_{IN} = 3.7 V, Vo = 1.2 V, XPS = H, ILIMSEL = L	-	-	600	mA
		V_{IN} = 2.5 V, Vo = 1.2 V, XPS = H, ILIMSEL = L	-	-	600	mA
	Io (Max7)	V_{IN} = 5.5 V, Vo = 0.8 V, XPS = H, ILIMSEL = L	-	-	600	mA
		V_{IN} = 3.7 V, Vo = 0.8 V, XPS = H, ILIMSEL = L	-	-	500	mA
		V_{IN} = 2.5 V, Vo = 0.8 V, XPS = H, ILIMSEL = L	-	-	250	mA
Output current (Boost) PWM mode	Io (Max8)	V_{IN} = 2.5 V, Vo = 3.3 V, XPS = H, ILIMSEL = L	-	-	800	mA
	Io (Max9)	V_{IN} = 2.5 V, Vo = 3.6 V, XPS = H, ILIMSEL = L	-	-	700	mA
	Io (Max10)	V_{IN} = 3.7 V, Vo = 4.4 V, XPS = H, ILIMSEL = L	-	-	1000	mA
		V_{IN} = 2.5 V, Vo = 4.4 V, XPS = H, ILIMSEL = L	-	-	700	mA
	Io (Max11)	V_{IN} = 3.7 V, Vo = 5 V, XPS = H, ILIMSEL = L	-	-	900	mA
		V_{IN} = 2.5 V, Vo = 5 V, XPS = H, ILIMSEL = L	-	-	600	mA

Parameter	Symbol	Condition	Value			Unit
			Min	Typ	Max	
Output current (Buck) Power save mode, ILIMSEL=H	Io (Max12)	V_{IN} = 5.5 V, Vo = 5.0 V, XPS = L, ILIMSEL = H	-	-	600	mA
	Io (Max13)	V_{IN} = 5.5 V, Vo = 4.4 V, XPS = L, ILIMSEL = H	-	-	600	mA
	Io (Max14)	V_{IN} = 5.5 V, Vo = 3.6 V, XPS = L, ILIMSEL = H	-	-	600	mA
		V_{IN} = 4.2 V, Vo = 3.6 V, XPS = L, ILIMSEL = H	-	-	600	mA
	Io (Max15)	V_{IN} = 5.5 V, Vo = 3.3 V, XPS = L, ILIMSEL = H	-	-	600	mA
		V_{IN} = 3.7 V, Vo = 3.3 V, XPS = L, ILIMSEL = H	-	-	600	mA
	Io (Max16)	V_{IN} = 5.5 V, Vo = 2.0 V, XPS = L, ILIMSEL = H	-	-	600	mA
		V_{IN} = 3.7 V, Vo = 2.0 V, XPS = L, ILIMSEL = H	-	-	500	mA
		V_{IN} = 2.5 V, Vo = 2.0 V, XPS = L, ILIMSEL = H	-	-	500	mA
	Io (Max17)	V_{IN} = 5.5 V, Vo = 1.2 V, XPS = L, ILIMSEL = H	-	-	400	mA
		V_{IN} = 3.7 V, Vo = 1.2 V, XPS = L, ILIMSEL = H	-	-	300	mA
		V_{IN} = 2.5 V, Vo = 1.2 V, XPS = L, ILIMSEL = H	-	-	300	mA
	Io (Max18)	V_{IN} = 5.5 V, Vo = 0.8 V, XPS = L, ILIMSEL = H	-	-	400	mA
		V_{IN} = 3.7 V, Vo = 0.8 V, XPS = L, ILIMSEL = H	-	-	200	mA
		V_{IN} = 2.5 V, Vo = 0.8 V, XPS = L, ILIMSEL = H	-	-	200	mA
Output current (Boost) Power save mode, ILIMSEL=H	Io (Max19)	V_{IN} = 2.5 V, Vo = 3.3 V, XPS = L, ILIMSEL = H	-	-	500	mA
	Io (Max20)	V_{IN} = 2.5 V, Vo = 3.6 V, XPS = L, ILIMSEL = H	-	-	400	mA
	Io (Max21)	V_{IN} = 3.7 V, Vo = 4.4 V, XPS = L, ILIMSEL = H	-	-	600	mA
		V_{IN} = 2.5 V, Vo = 4.4 V, XPS = L, ILIMSEL = H	-	-	350	mA
	Io (Max22)	V_{IN} = 3.7 V, Vo = 5 V, XPS = L, ILIMSEL = H	-	-	500	mA
		V_{IN} = 2.5 V, Vo = 5 V, XPS = L, ILIMSEL = H	-	-	300	mA
Output current (Buck) Power save mode, ILIMSEL=L	Io (Max23)	V_{IN} = 3.7 V, Vo = 3.3 V, XPS = L, ILIMSEL = L	-	-	160	mA
Output current (Boost) Power save mode, ILIMSEL=L	Io (Max24)	V_{IN} = 2.5 V, Vo = 5 V, XPS = L, ILIMSEL = L	-	-	60	mA
Operating Ambient temperature	Ta	-	-40	-	+85	°C
Junction temperature range	Tj	-	-40	-	+95	°C
Inductor value	L	-	-	0.5	-	µH
Feedback resistor value	R1	-	-	620	-	kΩ

*1: Depending on the setting condition. See "■ Function Table" in "4. Function (7) Power save mode operation".

WARNING:

1. The recommended operating conditions are required in order to ensure the normal operation of the semiconductor device. All of the device's electrical characteristics are warranted when the device is operated under these conditions.
2. Any use of semiconductor devices will be under their recommended operating condition.
3. Operation under any conditions other than these conditions may adversely affect reliability of device and could result in device failure.
4. No warranty is made with respect to any use, operating conditions or combinations not represented on this data sheet. If you are considering application under any conditions other than listed herein, please contact sales representatives beforehand.

7. Electrical Characteristics

The specifications apply under the recommended operating condition.

Parameter		Symbol	Condition	Value			Unit
				Min	Typ	Max	
Output voltage range		V_O	-	0.8	-	5.0	V
Feedback voltage		V_{FB}	-	490	500	510	mV
Line Regulation		V_{LINE}	IO = 0 to 800 mA	-	0.2	-	%
Load Regulation		V_{LOAD}	IO = 0 to 800 mA	-	0.3	-	%
Inductor peak current limit		I_{PK}	XPS = H, ILIMSEL = L	2.50	3.10	3.75	A
			XPS = L, ILIMSEL = H	1.05	1.30	1.60	A
			XPS = L, ILIMSEL = L	0.36	0.49	0.60	A
Oscillation frequency		f_{OSC}	-	5.2	5.8	6.4	MHz
Shutdown current		I_{SD}	EN = L	-	-	2	µA
Quiescent current		I_Q	EN = H, XPS = L, V_{IN} = 3.7 V, V_O = 3.3 V, I_O = 0 mA	-	50	-	µA
SW FET ON resistance	SW1	Rdson	V_{DD} = 3.7 V, V_O = 3.3 V, Ta = +25°C	-	63.5	84	mΩ
	SW2			-	124	175	
	SW3			-	82	116	
	SW4			-	123	164	
	SW5			-	51	72	
Over temperature protection		T_{OTPH}	-	-	135(*1)	-	°C
		T_{OTPL}	-	-	110(*1)	-	°C
UVLO Threshold voltage		V_{UVLOH}	-	1.9	2.0	2.1	V
		V_{UVLOL}	-	1.8	1.9	2.0	V
Signal input threshold voltage		V_{IL}	EN, XPS, VSEL, ILIMSEL	0.0	-	0.25	V
		V_{IH}	EN, XPS, VSEL, ILIMSEL	1.5	-	VDD	V
Signal input current		I_{CTL}	EN, XPS, VSEL, ILIMSEL	-	-	0.1	µA

*1: This parameter is not be specified. This should be used as a reference to support designing the circuits.

8. Typical Applications Circuit (RF Power Amplifier)

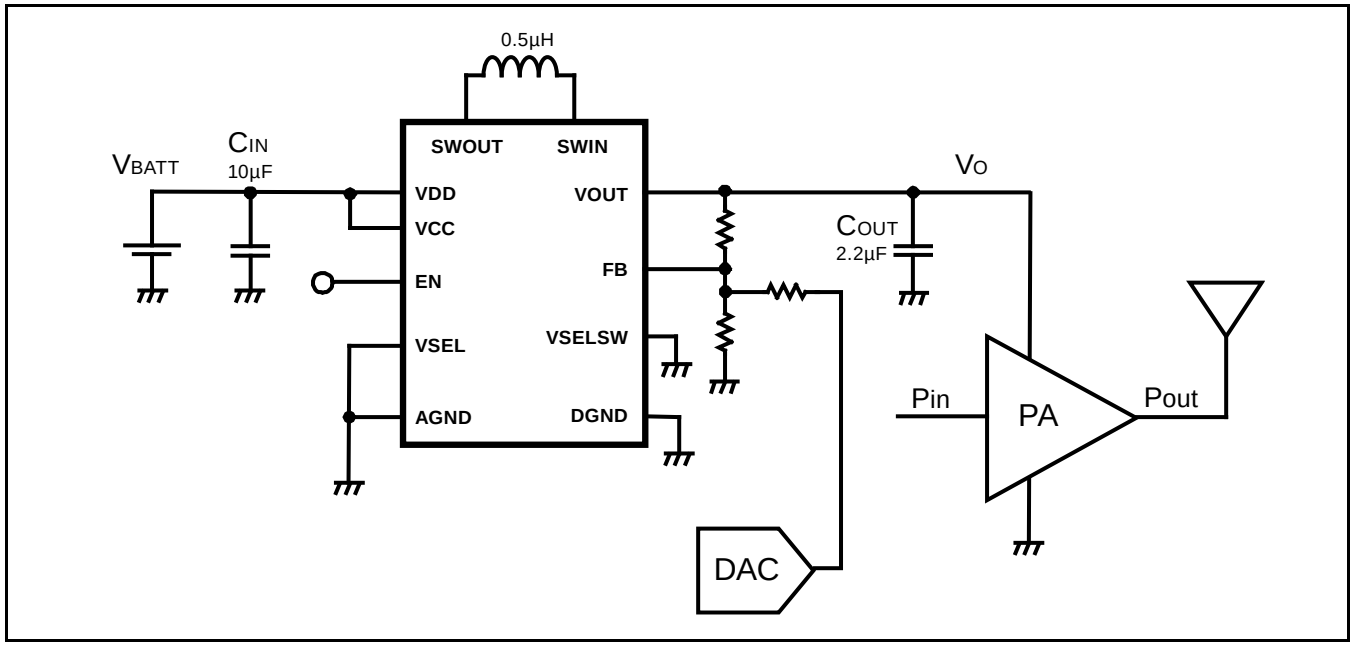

9. Application Notes

Programming the Output Voltage

Output voltage is calculated using the equation (1) below.
Use R1 resistor value of 620 kΩ. Built-in phase compensation circuit is generated according to this resistor value.

1. Not using a selectable voltage option

$$V_O = V_{FB} \times \frac{R_1 + R_2}{R_2}$$

(V_{FB} = 500 mV)

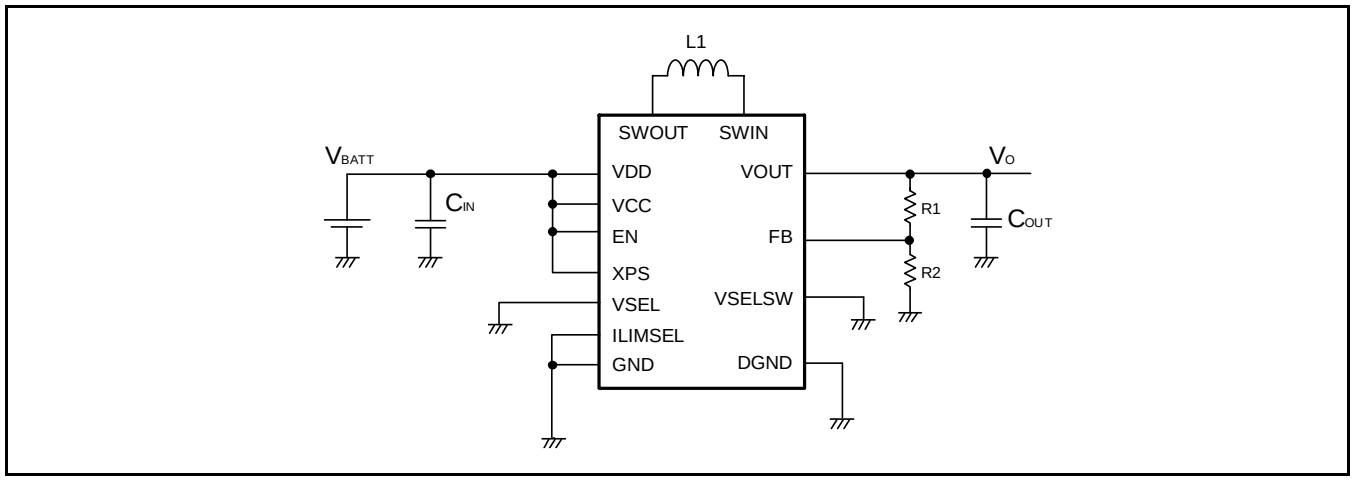

2. Using a selectable voltage option

When VSEL = L

$$V_O = V_{FB} \times \frac{R_1 + R_2}{R_2}$$

When VSEL = H

$$V_O = V_{FB} \times \frac{R_1 + (R_2 // R_3)}{R_2 // R_3}$$

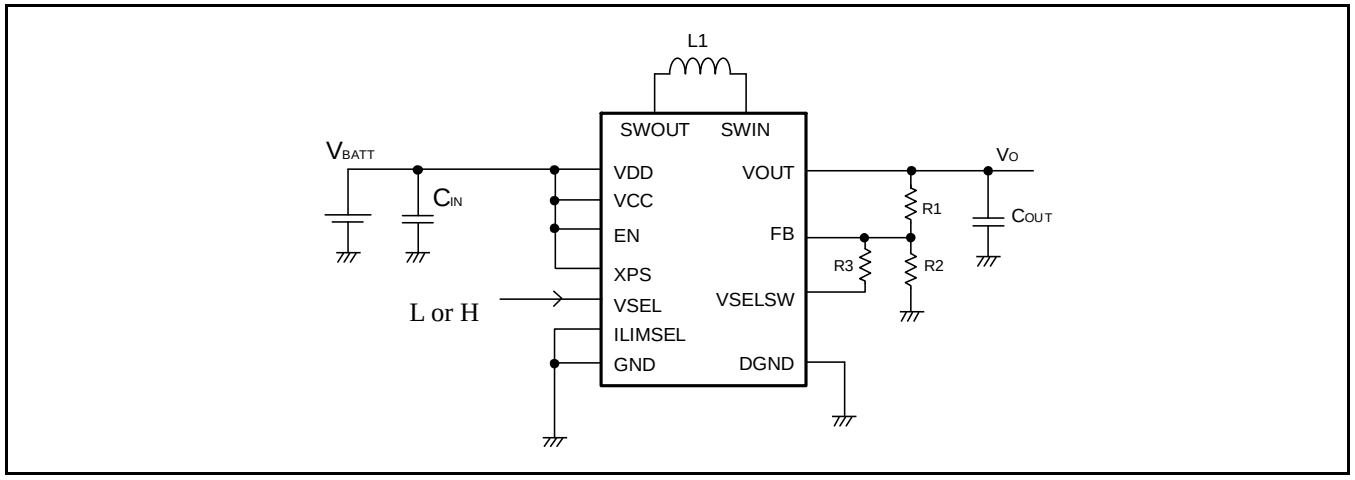

3. When the output variable is dynamically performed

$$V_O = -\frac{R_1}{R_3} \times V_{DAC} + V_{FB} \times \left(\frac{R_1}{R_3} + \frac{R_1}{R_2} + 1 \right)$$

(V_{FB} = 500 mV)

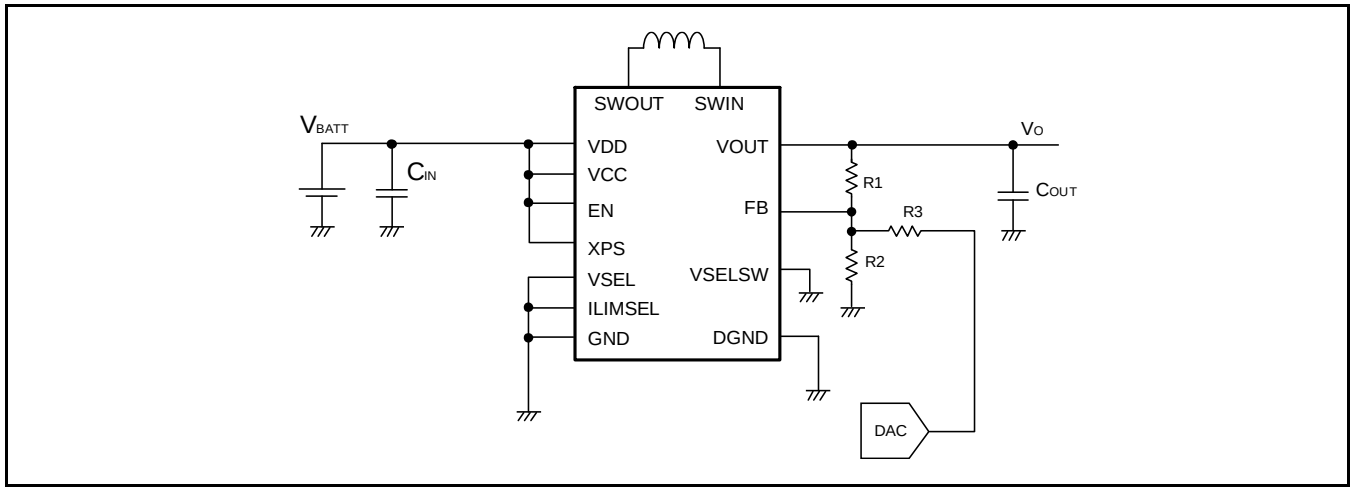

Relationship between DAC and output when setting to R1 = 620 kΩ, R2 = 110 kΩ and R3 = 330 kΩ

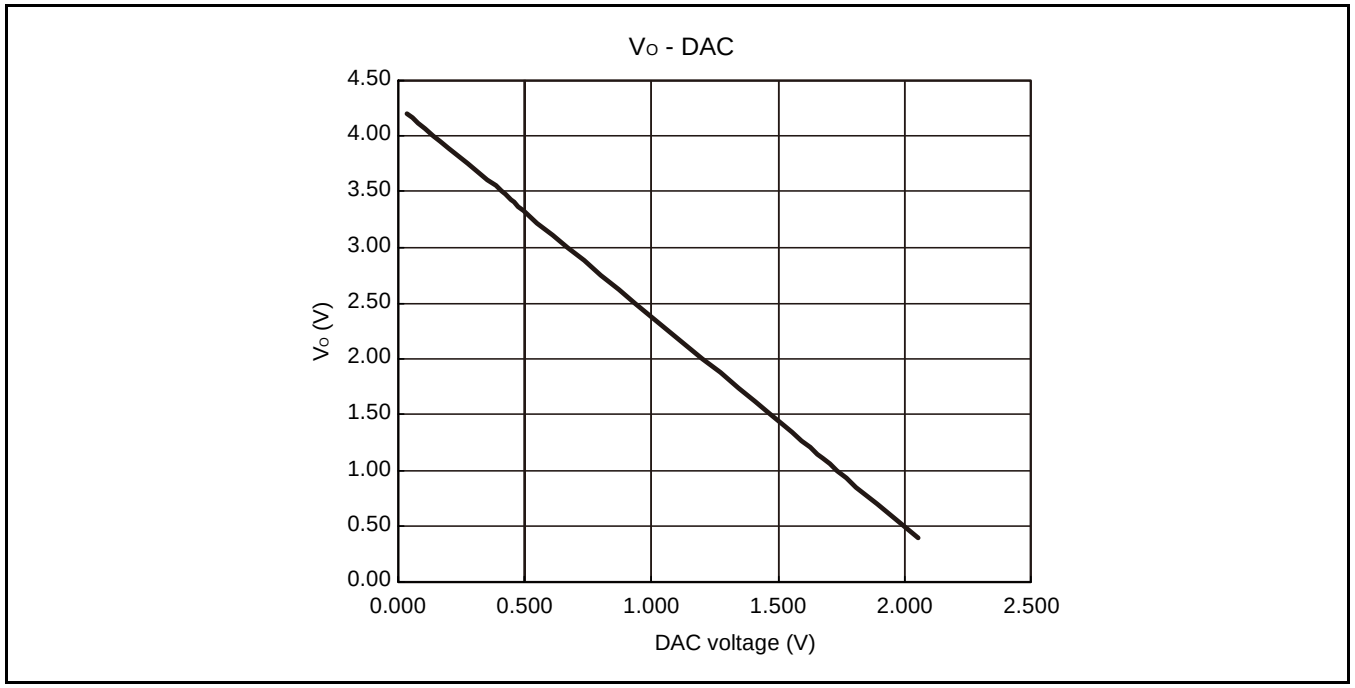

10. Inductor Selection

The recommended inductor is 0.5 µH (0.47 µH).
To acquire a high-efficiency, select an inductor with low ESR.
Confirm in use conditions that the coil current does not exceed the rated saturation current.
It is recommended that the switch current limit value is considered.
Note that the permissible current value might be low about some products with high ESR because of the device temperature increasing.

The following table shows the recommended inductor.

Vendor	Part #	Size			DCR [Ω] (Max)	Isat [A] (-30%)
		L [mm]	W [mm]	H [mm]		
Coilcraft	XPL2010-501ML	1.9	2.0	1.0	0.045	2.64
ALPS	GLCHKR4701A	2.0	1.6	1.0	0.035	3.6

Coilcraft : Coilcraft, Inc.

ALPS : Alps Green Devices Co., Ltd

11. Input Capacitor Selection

It is recommended to place a low ESR ceramic bypass capacitor at least 10 µF close to VDD and GND because the input capacitor is the power-supply voltage.

The execution capacity of some ceramic capacitors greatly decreases when adding bias.
Select a product by checking the part characteristics of manufacturer because small size parts or low voltage rating parts tend to have that characteristic.

12. Output Capacitor Selection

The recommended standard capacity of the output capacitor is 2.2 µF in PWM mode.
When using in power save mode, the capacitor with larger capacity (around 22 µF) is recommended to reduce the ripple voltage at PFM operation.
To suppress the decrease of output voltage during the load change, adjust with a larger capacitor.
Larger capacitors and low ESR capacitors is useful to reduce the ripple.

13. Thermal Information

Power dissipation is 1080 mW Max.
Thermal resistance(θja) is 65°C /W (JEDEC). This value can be used to calculate the chip temperature.
Thermal resistance is calculated based on the usage of JEDEC standard boards. It is recommended to consider for the thermal design that the value may vary depending on the area of the board and the positions of the vias.
See "Power dissipation vs. Operation ambient temperature" in "15. Example of Standard Operation ".

14. Notes on Board Layout

A suitable board layout is required for stable operations of this IC.
Place the peripheral component, input capacitance C_{IN} and the output capacitance C_{OUT} close to this IC as much as possible, and connect them with the shortest routes.
The routes with large current, in particular, the routes with variable current must be placed on the front surface with the shortest routes.
Separate DGND from GND and connect GND at one point close to C_{OUT}.
Provide the ground plane as much as possible on the IC mounted face. It is useful for heat dissipation.

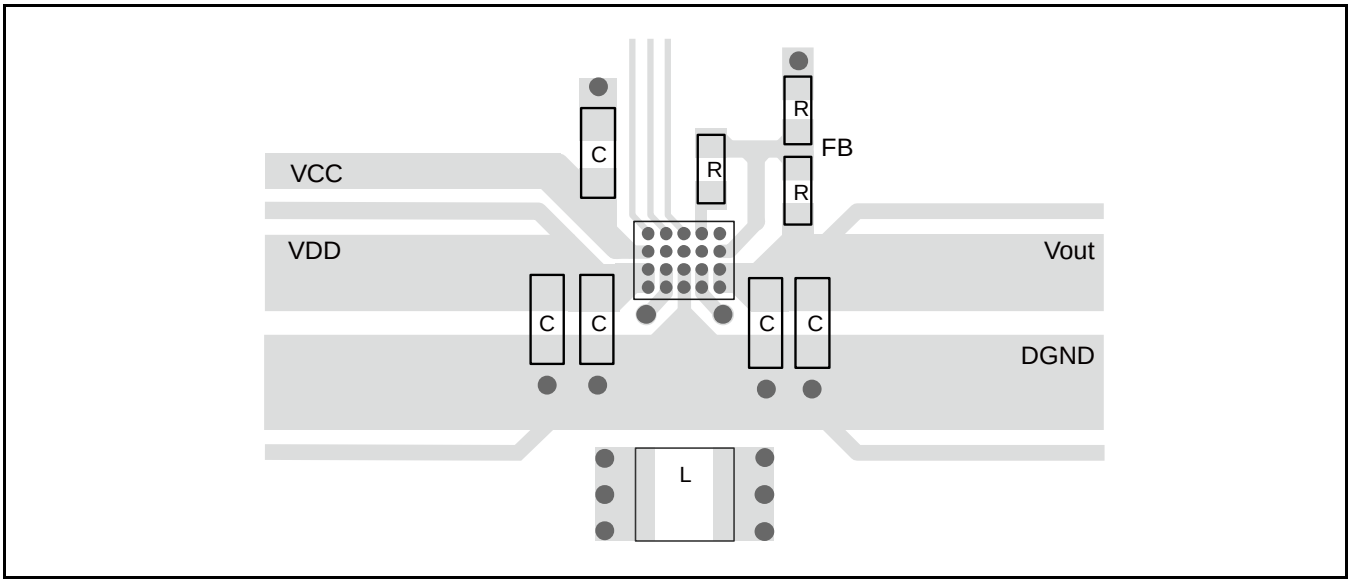

15. Example of Standard Operation Characteristics

Efficiency vs. Load Current (V_{IN} = 3.7V, PWM mode)

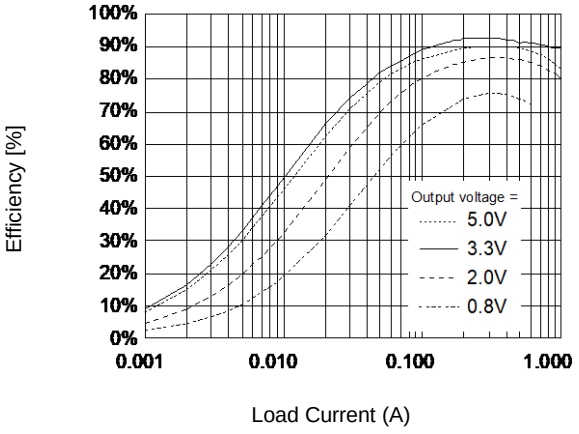

Efficiency vs. Load Current
(V_{IN} = 3.7V, Power save mode, ILIMSEL=H)

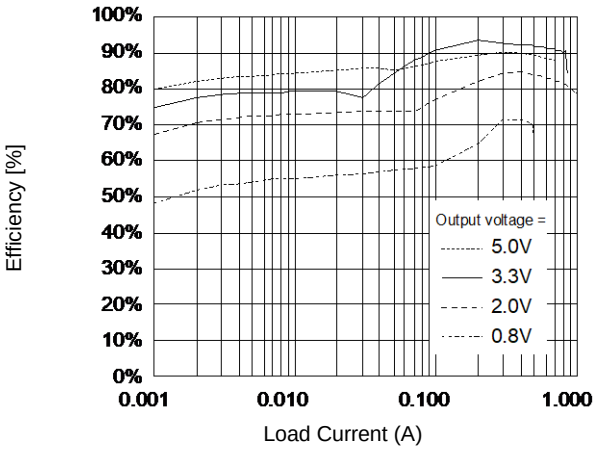

Efficiency vs. Load Current (V_O = 3.3V, PWM mode)

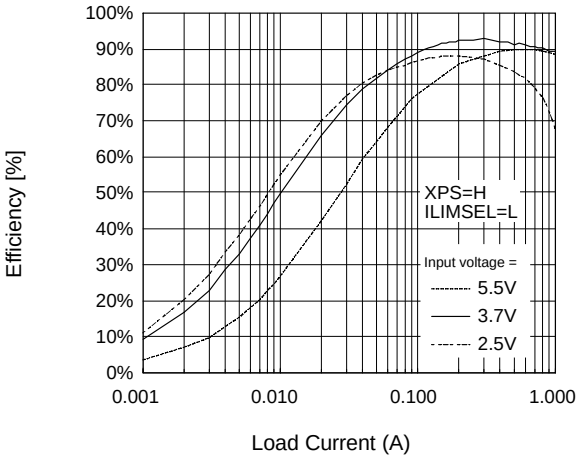

Efficiency vs. Load Current
(V_O = 3.3V, Power save mode, ILIMSEL=H)

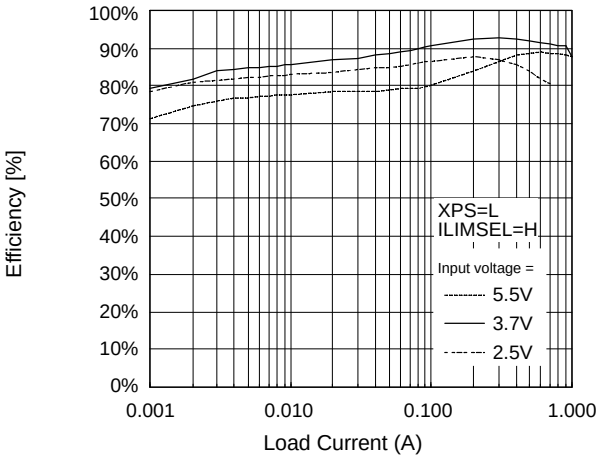

Efficiency vs. Load Current (V_O = 5.0V, PWM mode)

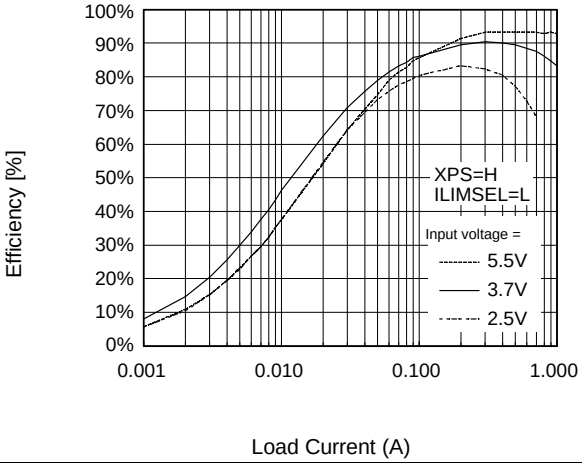

Efficiency vs. Load Current
(V_O = 5.0V, Power save mode, ILIMSEL=H)

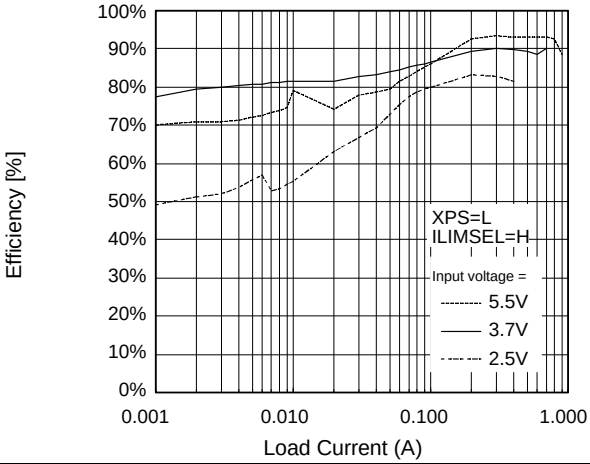

Maximum Output Current vs. Input Voltage
(PWM mode)

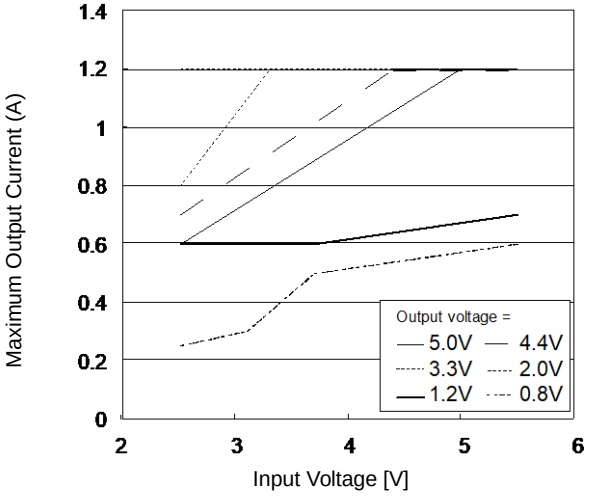

Maximum Output Current vs. Input Voltage
(Power save mode, ILIMSEL=H)

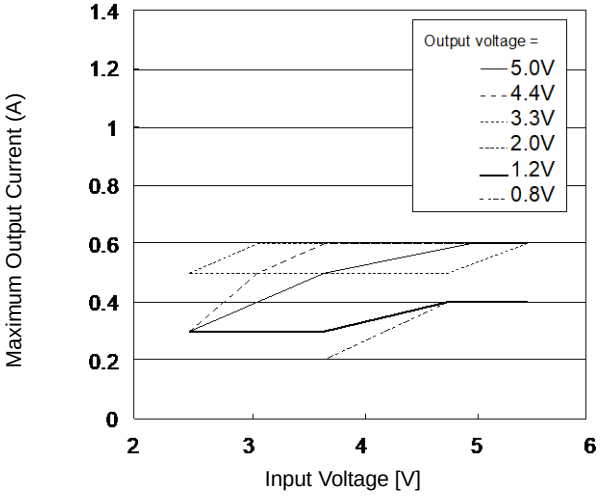

Load sudden change waveform

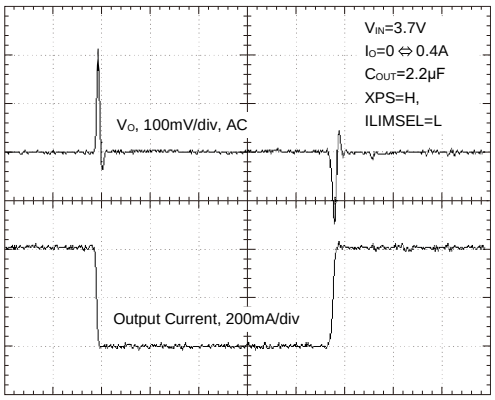

Startup (PWM mode)

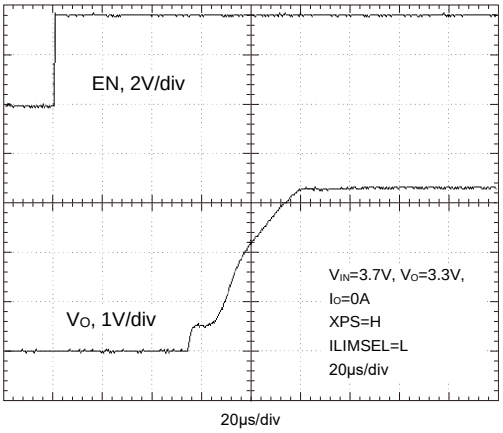

Startup (Power save mode, ILIMSEL=H)

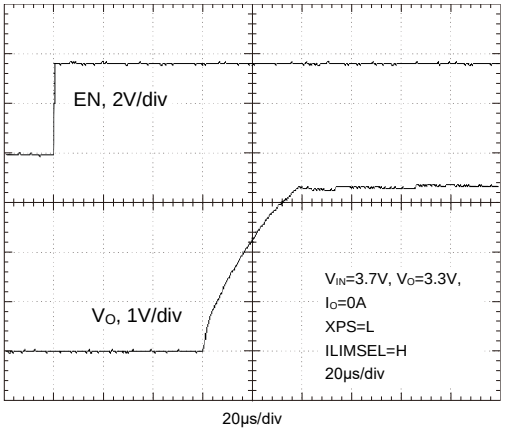

V_O step response (Rise)

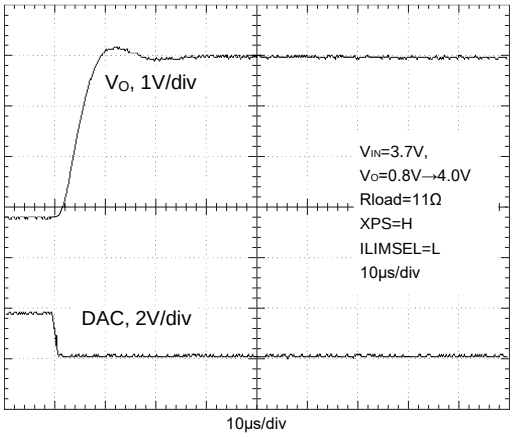

V_O step response (Fall)

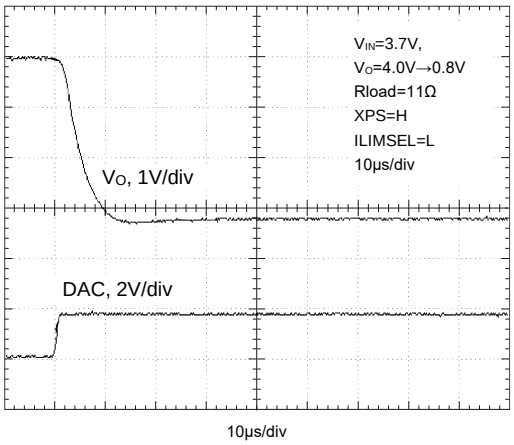

Power consumption vs.
Operating ambient temperature

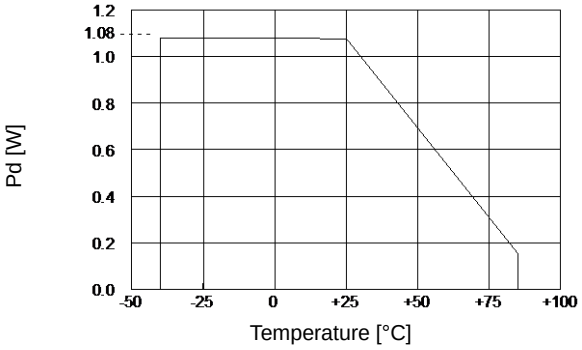

16. Usage Precaution

■ Do not configure the IC over the maximum ratings.
If the IC is used over the maximum ratings, the LSI may be permanently damaged.

It is preferable for the device to be normally operated within the recommended usage conditions. Usage outside of these conditions can have a bad effect on the reliability of the LSI.

■ Use the devices within recommended operating conditions.
The recommended operating conditions are the recommended values that guarantee the normal operations of LSI.

The electrical ratings are guaranteed when the device is used within the recommended operating conditions and under the conditions stated for each item.

■ Printed circuit board ground lines should be set up with consideration for common impedance.

■ Take appropriate measures against static electricity.
- Containers for semiconductor materials should have anti-static protection or be made of conductive material.
- After mounting, printed circuit boards should be stored and shipped in conductive bags or containers.
- Work platforms, tools, and instruments should be properly grounded.
- Working personnel should be grounded with resistance of 250 kΩ to 1 MΩ in series between body and ground.

■ Do not apply negative voltages.
The use of negative voltages below -0.3 V may cause the parasitic transistor to be activated on LSI lines, which can cause malfunctions.

17. Notes on Mounting

In general, the underfill material and sealing method affect the reliability of mounting.
Cypress does not evaluate the mounting using the underfill material.
It is advisable for each customer to evaluate the mounting enough.

WL-CSP has a surface boundary between silicon and resin at the side of the package.
Resin may be pulled by the board because of the underfill material and its shape and the state, and stress may occur at the surface boundary.
The result may vary depending on the board and the underfill material used by each customer; therefore, it is advisable for each customer to evaluate the mounting enough in order to apply to the products.

When using the underfill materials, be sure to apply the underfill to the silicon side surface as shown below (fillet formation).

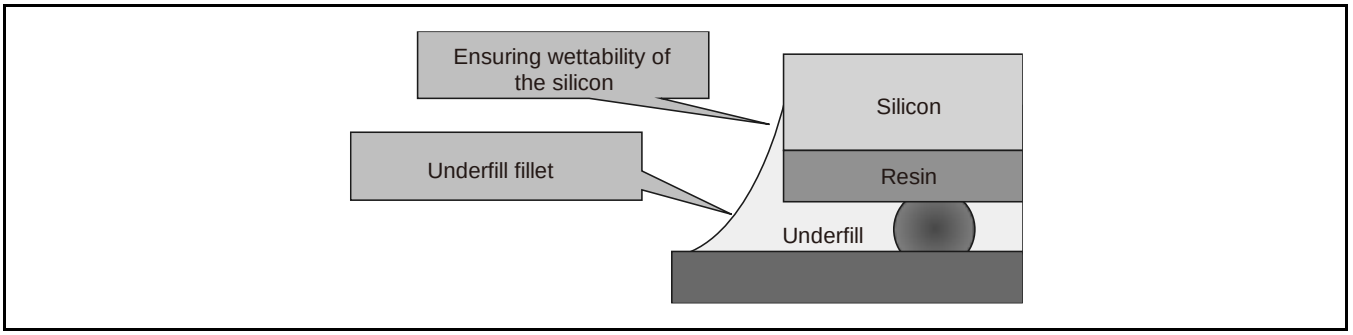

18. Ordering Information

Part Number	Package	Remarks
CY39C326PW	20-pin plastic WL-CSP (U4D020)	–

19. RoHS Compliance Information

The LSI products of Cypress with "E1" are compliant with RoHS Directive, and has observed the standard of lead, cadmium, mercury, Hexavalent chromium, polybrominated biphenyls (PBB), and polybrominated diphenyl ethers (PBDE). A product whose part number has trailing characters "E1" is RoHS compliant.

20. Package Dimensions

Package Code: U4D020

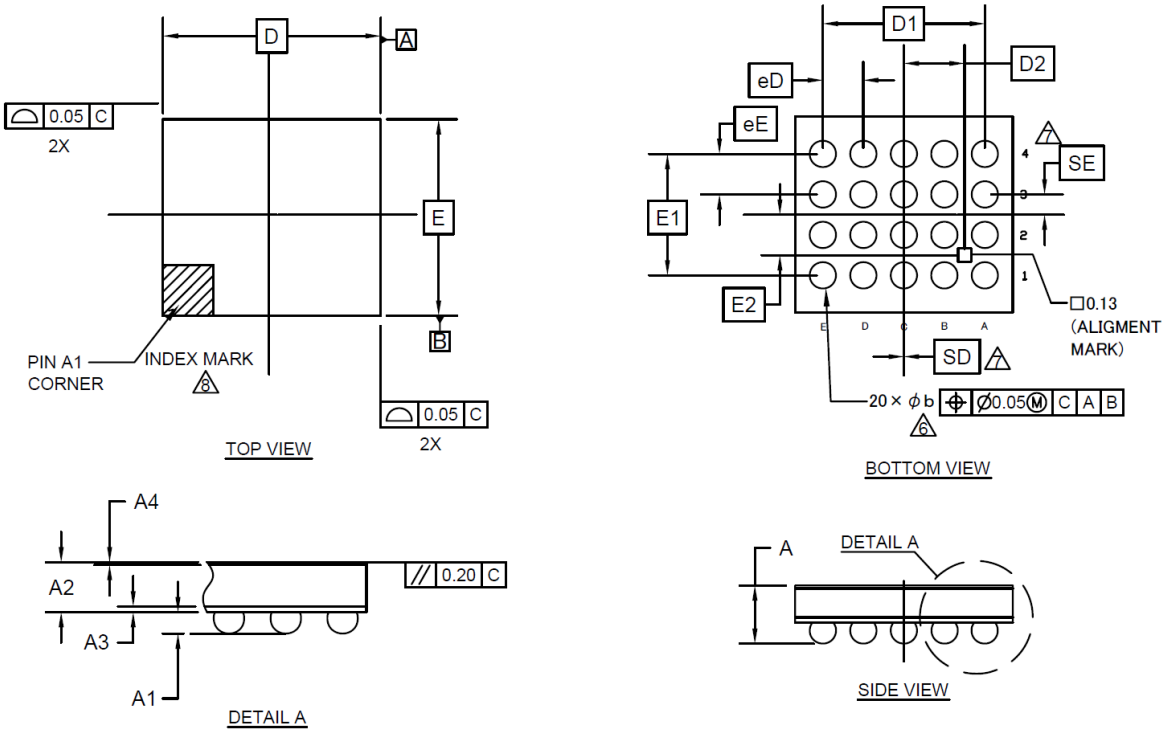

SYMBOL	DIMENSIONS		
	MIN.	NOM.	MAX.
A	—	—	0.625
A1	0.207	0.21	0.213
A2	0.365 BSC		
A3	0.05 BSC		
A4	0.025 BSC		
D	2.15 BSC		
E	1.94 BSC		
D1	1.60 BSC		
E1	1.20 BSC		
D2	0.60 BSC		
E2	0.40 BSC		
MD	5		
ME	4		
n	20		
ϕb	0.23	0.26	0.29
eD	0.40 BSC		
eE	0.40 BSC		
SD / SE	0 / 0.20 BSC		

NOTES

1. ALL DIMENSIONS ARE IN MILLIMETERS.
2. DIMENSIONS AND TOLERANCES METHODS PER ASME Y14.5-2009. THIS OUTLINE CONFORMS TO JEP95, SECTION 4.5.
3. BALL POSITION DESIGNATION PER JEP95, SECTION 3, SPP-010.
4. "e" REPRESENTS THE SOLDER BALL GRID PITCH.
5. SYMBOL "MD" IS THE BALL MATRIX SIZE IN THE "D" DIRECTION. SYMBOL "ME" IS THE BALL MATRIX SIZE IN THE "E" DIRECTION. n IS THE NUMBER OF POPULATED SOLDER BALL POSITIONS FOR MATRIX SIZE MD X ME.
6. DIMENSION "b" IS MEASURED AT THE MAXIMUM BALL DIAMETER IN A PLANE PARALLEL TO DATUM C.
7. "SD" AND "SE" ARE MEASURED WITH RESPECT TO DATUMS A AND B AND DEFINE THE POSITION OF THE CENTER SOLDER BALL IN THE OUTER ROW. WHEN THERE IS AN ODD NUMBER OF SOLDER BALLS IN THE OUTER ROW "SD" OR "SE" = 0. WHEN THERE IS AN EVEN NUMBER OF SOLDER BALLS IN THE OUTER ROW, "SD" = eD/2 AND "SE" = eE/2.
8. A1 CORNER TO BE IDENTIFIED BY CHAMFER, LASER OR INK MARK. METALLIZED MARK INDENTATION OR OTHER MEANS.
9. "+" INDICATES THE THEORETICAL CENTER OF DEPOPULATED BALLS.
10. JEDEC SPECIFICATION NO. REF: N/A.

002-16171 Rev. **

21. Major Changes

Spansion Publication Number: DS405-00001

Page	Section	Change Results
Revision 1.0		
-	-	Initial release

NOTE: Please see "Document History" about later revised information.

Document History

Document Title: CY39C326 6 MHz Synchronous Rectification Buck-Boost DC/DC Converter IC
Document Number: 002-08348

Revision	ECN	Orig. of Change	Submission Date	Description of Change
**	–	TAOA	01/31/2014	Migrated to Cypress and assigned document number 002-08348. No change to document contents or format.
*A	5131396	TAOA	02/10/2016	Updated to Cypress template
*B	5732493	HIXT	05/11/2017	Updated Pin Assignments: Added the package name, U4D020 Updated Ordering Information: Change the package name from WLP-20P-M01 to U4D020 Deleted “EV Board Ordering Information” Deleted “Marking” Deleted “Labeling Sample” Deleted “MB39C326PW Recommended Conditions of Moisture Sensitivity Level” Updated Package Dimensions: Updated to Cypress format
*C	6532697	ATTS	04/17/2019	Changed part number to CY39C326

Sales, Solutions, and Legal Information

Worldwide Sales and Design Support

Cypress maintains a worldwide network of offices, solution centers, manufacturer's representatives, and distributors. To find the office closest to you, visit us at Cypress Locations.

Products

Arm® Cortex® Microcontrollers	cypress.com/arm
Automotive	cypress.com/automotive
Clocks & Buffers	cypress.com/clocks
Interface	cypress.com/interface
Internet of Things	cypress.com/iot
Memory	cypress.com/memory
Microcontrollers	cypress.com/mcu
PSoC	cypress.com/psoc
Power Management ICs	cypress.com/pmic
Touch Sensing	cypress.com/touch
USB Controllers	cypress.com/usb
Wireless Connectivity	cypress.com/wireless

PSoC® Solutions

PSoC 1 | PSoC 3 | PSoC 4 | PSoC 5LP | PSoC 6 MCU

Cypress Developer Community

Community | Projects | Videos | Blogs | Training | Components

Technical Support

cypress.com/support

Arm and Cortex are registered trademarks of Arm Limited (or its subsidiaries) in the US and/or elsewhere.

© Cypress Semiconductor Corporation, 2014-2019. This document is the property of Cypress Semiconductor Corporation and its subsidiaries ("Cypress"). This document, including any software or firmware included or referenced in this document ("Software"), is owned by Cypress under the intellectual property laws and treaties of the United States and other countries worldwide. Cypress reserves all rights under such laws and treaties and does not, except as specifically stated in this paragraph, grant any license under its patents, copyrights, trademarks, or other intellectual property rights. If the Software is not accompanied by a license agreement and you do not otherwise have a written agreement with Cypress governing the use of the Software, then Cypress hereby grants you a personal, non-exclusive, nontransferable license (without the right to sublicense) (1) under its copyright rights in the Software (a) for Software provided in source code form, to modify and reproduce the Software solely for use with Cypress hardware products, only internally within your organization, and (b) to distribute the Software in binary code form externally to end users (either directly or indirectly through resellers and distributors), solely for use on Cypress hardware product units, and (2) under those claims of Cypress's patents that are infringed by the Software (as provided by Cypress, unmodified) to make, use, distribute, and import the Software solely for use with Cypress hardware products. Any other use, reproduction, modification, translation, or compilation of the Software is prohibited.

TO THE EXTENT PERMITTED BY APPLICABLE LAW, CYPRESS MAKES NO WARRANTY OF ANY KIND, EXPRESS OR IMPLIED, WITH REGARD TO THIS DOCUMENT OR ANY SOFTWARE OR ACCOMPANYING HARDWARE, INCLUDING, BUT NOT LIMITED TO, THE IMPLIED WARRANTIES OF MERCHANTABILITY AND FITNESS FOR A PARTICULAR PURPOSE. No computing device can be absolutely secure. Therefore, despite security measures implemented in Cypress hardware or software products, Cypress shall have no liability arising out of any security breach, such as unauthorized access to or use of a Cypress product. CYPRESS DOES NOT REPRESENT, WARRANT, OR GUARANTEE THAT CYPRESS PRODUCTS, OR SYSTEMS CREATED USING CYPRESS PRODUCTS, WILL BE FREE FROM CORRUPTION, ATTACK, VIRUSES, INTERFERENCE, HACKING, DATA LOSS OR THEFT, OR OTHER SECURITY INTRUSION (collectively, "Security Breach"). Cypress disclaims any liability relating to any Security Breach, and you shall and hereby do release Cypress from any claim, damage, or other liability arising from any Security Breach. In addition, the products described in these materials may contain design defects or errors known as errata which may cause the product to deviate from published specifications. To the extent permitted by applicable law, Cypress reserves the right to make changes to this document without further notice. Cypress does not assume any liability arising out of the application or use of any product or circuit described in this document. Any information provided in this document, including any sample design information or programming code, is provided only for reference purposes. It is the responsibility of the user of this document to properly design, program, and test the functionality and safety of any application made of this information and any resulting product. "High-Risk Device" means any device or system whose failure could cause personal injury, death, or property damage. Examples of High-Risk Devices are weapons, nuclear installations, surgical implants, and other medical devices. "Critical Component" means any component of a High-Risk Device whose failure to perform can be reasonably expected to cause, directly or indirectly, the failure of the High-Risk Device, or to affect its safety or effectiveness. Cypress is not liable, in whole or in part, and you shall and hereby do release Cypress from any claim, damage, or other liability arising from any use of a Cypress product as a Critical Component in a High-Risk Device. You shall indemnify and hold Cypress, its directors, officers, employees, agents, affiliates, distributors, and assigns harmless from and against all claims, costs, damages, and expenses, arising out of any claim, including claims for product liability, personal injury or death, or property damage arising from any use of a Cypress product as a Critical Component in a High-Risk Device. Cypress products are not intended or authorized for use as a Critical Component in any High-Risk Device except to the limited extent that (i) Cypress's published data sheet for the product explicitly states Cypress has qualified the product for use in a specific High-Risk Device, or (ii) Cypress has given you advance written authorization to use the product as a Critical Component in the specific High-Risk Device and you have signed a separate indemnification agreement.

Cypress, the Cypress logo, Spansion, the Spansion logo, and combinations thereof, WICED, PSoC, CapSense, EZ-USB, F-RAM, and Traveo are trademarks or registered trademarks of Cypress in the United States and other countries. For a more complete list of Cypress trademarks, visit cypress.com. Other names and brands may be claimed as property of their respective owners.