Please note that Cypress is an Infineon Technologies Company.
The document following this cover page is marked as “Cypress” document as this is the company that originally developed the product. Please note that Infineon will continue to offer the product to new and existing customers as part of the Infineon product portfolio.

Continuity of document content
The fact that Infineon offers the following product as part of the Infineon product portfolio does not lead to any changes to this document. Future revisions will occur when appropriate, and any changes will be set out on the document history page.

Continuity of ordering part numbers
Infineon continues to support existing part numbers. Please continue to use the ordering part numbers listed in the datasheet for ordering.

CY15E064J

64-Kbit (8K × 8) Serial (I^2C) Automotive-E F-RAM

Features

- 64-Kbit ferroelectric random access memory (F-RAM) logically organized as 8K × 8
  - High-endurance 10 trillion (10^{13}) read/writes
  - 121-year data retention (See Data Retention and Endurance on page 10)
  - NoDelay™ writes
  - Advanced high-reliability ferroelectric process
- Fast two-wire Serial interface (I^2C)
  - Up to 1-MHz frequency
  - Direct hardware replacement for serial (I^2C) EEPROM
  - Supports legacy timings for 100 kHz and 400 kHz
- Low power consumption
  - 250 µA (typ) active current at 100 kHz
  - 40 µA (typ) standby current
- Voltage operation: V_{DD} = 4.5 V to 5.5 V
- Automotive-E temperature: –40 °C to +125 °C
- 8-pin small outline integrated circuit (SOIC) package
- AEC Q100 Grade 1 compliant
- Restriction of hazardous substances (RoHS) compliant

Functional Description

The CY15E064J is a 64-Kbit nonvolatile memory employing an advanced ferroelectric process. A ferroelectric random access memory or F-RAM is nonvolatile and performs reads and writes similar to a RAM. It provides reliable data retention for 121 years while eliminating the complexities, overhead, and system-level reliability problems caused by EEPROM and other nonvolatile memories.

Unlike EEPROM, the CY15E064J performs write operations at bus speed. No write delays are incurred. Data is written to the memory array immediately after each byte is successfully transferred to the device. The next bus cycle can commence without the need for data polling. In addition, the product offers substantial write endurance compared with other nonvolatile memories. Also, F-RAM exhibits much lower power during writes than EEPROM since write operations do not require an internally elevated power supply voltage for write circuits. The CY15E064J is capable of supporting 10^{13} read/write cycles, or 10 million times more write cycles than EEPROM.

These capabilities make the CY15E064J ideal for nonvolatile memory applications, requiring frequent or rapid writes. Examples range from data logging, where the number of write cycles may be critical, to demanding industrial controls where the long write time of EEPROM can cause data loss. The combination of features allows more frequent data writing with less overhead for the system.

The CY15E064J provides substantial benefits to users of serial (I^2C) EEPROM as a hardware drop-in replacement. The device specifications are guaranteed over an automotive-e temperature range of –40 °C to +125 °C.

Logic Block Diagram

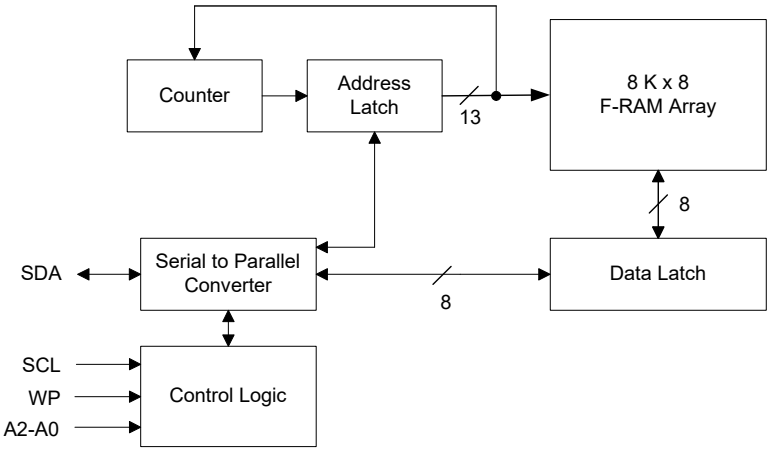

Contents

Pinout **3**
Pin Definitions **3**
Functional Overview **4**
Memory Architecture **4**
I2C Interface **4**
STOP Condition (P) 4
START Condition (S) 4
Data/Address Transfer 5
Acknowledge/No-acknowledge 5
Slave Device Address 6
Addressing Overview 6
Data Transfer 6
Memory Operation **6**
Write Operation 6
Read Operation 7
Endurance **8**
Maximum Ratings **9**
Operating Range **9**
DC Electrical Characteristics **9**
Data Retention and Endurance **10**
Example of an F-RAM Life Time in an AEC-Q100 Automotive Application **10**
Capacitance **10**
Thermal Resistance **10**
AC Test Loads and Waveforms **11**
AC Test Conditions **11**
AC Switching Characteristics **12**
Power Cycle Timing **13**
Ordering Information **14**
Ordering Code Definitions 14
Package Diagram **15**
Acronyms **16**
Document Conventions **16**
Units of Measure 16
Document History Page **17**
Sales, Solutions, and Legal Information **18**
Worldwide Sales and Design Support 18
Products 18
PSoC® Solutions 18
Cypress Developer Community 18
Technical Support 18

Pinout

Figure 1. 8-pin SOIC pinout

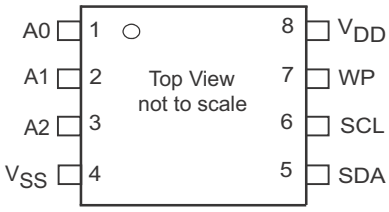

Pin Definitions

Pin Name	I/O Type	Description
A2–A0	Input	**Device Select Address 2–0**. These pins are used to select one of up to 8 devices of the same type on the same I^2C bus. To select the device, the address value on the three pins must match the corresponding bits contained in the slave address. The address pins are pulled down internally.
SDA	Input/Output	**Serial Data/Address**. This is a bi-directional pin for the I^2C interface. It is open-drain and is intended to be wire-AND'd with other devices on the I^2C bus. The input buffer incorporates a Schmitt trigger for noise immunity and the output driver includes slope control for falling edges. An external pull-up resistor is required.
SCL	Input	**Serial Clock**. The serial clock pin for the I^2C interface. Data is clocked out of the device on the falling edge, and into the device on the rising edge. The SCL input also incorporates a Schmitt trigger input for noise immunity.
WP	Input	**Write Protect**. When tied to V_{DD}, addresses in the entire memory map will be write-protected. When WP is connected to ground, all addresses are write enabled. This pin is pulled down internally.
V_{SS}	Power supply	Ground for the device. Must be connected to the ground of the system.
V_{DD}	Power supply	Power supply input to the device.

Functional Overview

The CY15E064J is a serial F-RAM memory. The memory array is logically organized as 8,192 × 8 bits and is accessed using an industry-standard I^2C interface. The functional operation of the F-RAM is similar to serial (I^2C) EEPROM. The major difference between the CY15E064J and a serial (I^2C) EEPROM with the same pinout is the F-RAM's superior write performance, high endurance, and low power consumption.

Memory Architecture

When accessing the CY15E064J, the user addresses 8K locations of eight data bits each. These eight data bits are shifted in or out serially. The addresses are accessed using the I^2C protocol, which includes a slave address (to distinguish other non-memory devices) and a two-byte address. The upper 3 bits of the address range are 'don't care' values. The complete address of 13 bits specifies each byte address uniquely.

The access time for the memory operation is essentially zero, beyond the time needed for the serial protocol. That is, the memory is read or written at the speed of the I^2C bus. Unlike a serial (I^2C) EEPROM, it is not necessary to poll the device for a ready condition because writes occur at bus speed. By the time a new bus transaction can be shifted into the device, a write operation is complete. This is explained in more detail in the interface section.

I^2C Interface

The CY15E064J employs a bi-directional I^2C bus protocol using few pins or board space. Figure 2 illustrates a typical system configuration using the CY15E064J in a microcontroller-based system. The industry standard I^2C bus is familiar to many users but is described in this section.

By convention, any device that is sending data onto the bus is the transmitter while the target device for this data is the receiver. The device that is controlling the bus is the master. The master is responsible for generating the clock signal for all operations. Any device on the bus that is being controlled is a slave. The CY15E064J is always a slave device.

The bus protocol is controlled by transition states in the SDA and SCL signals. There are four conditions including START, STOP, data bit, or acknowledge. Figure 3 on page 5 and Figure 4 on page 5 illustrates the signal conditions that specify the four states. Detailed timing diagrams are shown in the electrical specifications section.

Figure 2. System Configuration using Serial (I^2C) nvSRAM

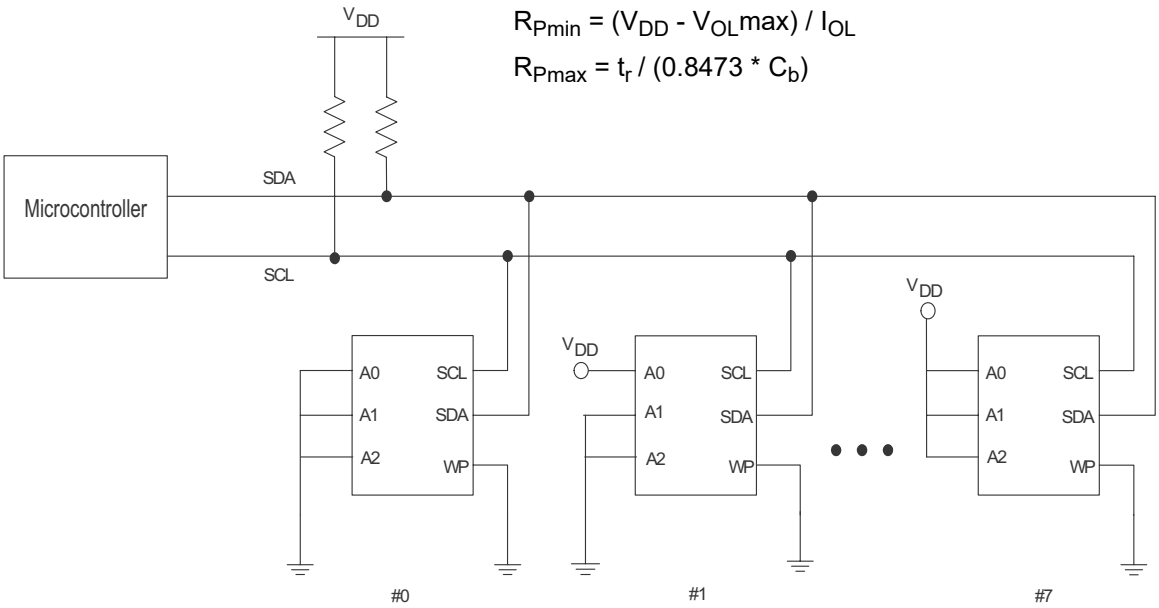

STOP Condition (P)

A STOP condition is indicated when the bus master drives SDA from LOW to HIGH while the SCL signal is HIGH. All operations using the CY15E064J should end with a STOP condition. If an operation is in progress when a STOP is asserted, the operation will be aborted. The master must have control of SDA in order to assert a STOP condition.

START Condition (S)

A START condition is indicated when the bus master drives SDA from HIGH to LOW while the SCL signal is HIGH. All commands should be preceded by a START condition. An operation in progress can be aborted by asserting a START condition at any time. Aborting an operation using the START condition will ready the CY15E064J for a new operation.

If during operation the power supply drops below the specified V_{DD} minimum, the system should issue a START condition prior to performing another operation.

Figure 3. START and STOP Conditions

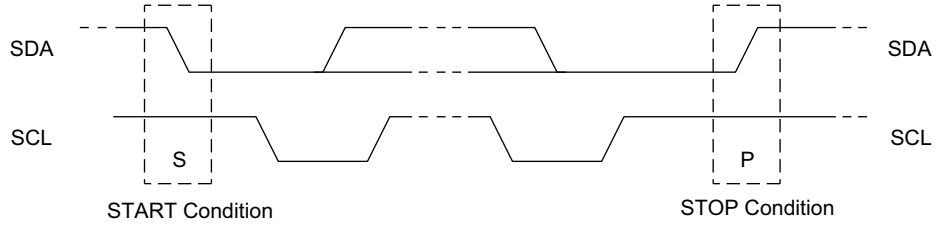

Figure 4. Data Transfer on the I²C Bus

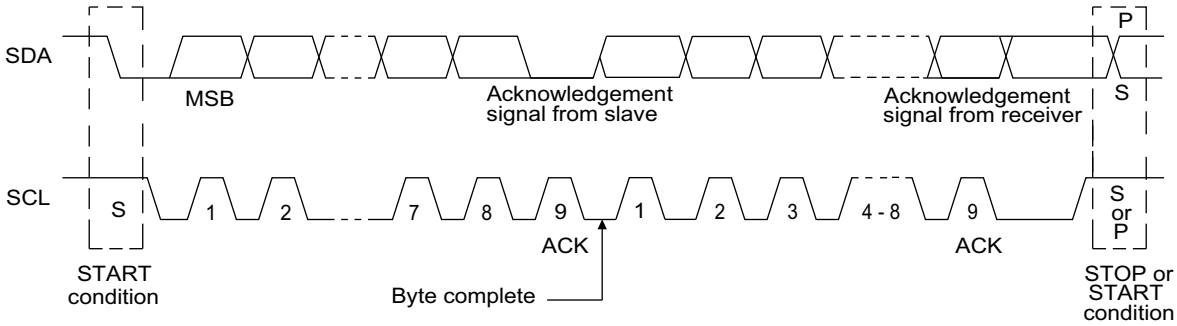

Data/Address Transfer

All data transfers (including addresses) take place while the SCL signal is HIGH. Except under the three conditions described above, the SDA signal should not change while SCL is HIGH.

Acknowledge/No-acknowledge

The acknowledge takes place after the 8th data bit has been transferred in any transaction. During this state the transmitter should release the SDA bus to allow the receiver to drive it. The receiver drives the SDA signal LOW to acknowledge receipt of the byte. If the receiver does not drive SDA LOW, the condition is a no-acknowledge and the operation is aborted.

The receiver would fail to acknowledge for two distinct reasons. First is that a byte transfer fails. In this case, the no-acknowledge ceases the current operation so that the device can be addressed again. This allows the last byte to be recovered in the event of a communication error.

Second and most common, the receiver does not acknowledge to deliberately end an operation. For example, during a read operation, the CY15E064J will continue to place data onto the bus as long as the receiver sends acknowledges (and clocks). When a read operation is complete and no more data is needed, the receiver must not acknowledge the last byte. If the receiver acknowledges the last byte, this will cause the CY15E064J to attempt to drive the bus on the next clock while the master is sending a new command such as STOP.

Figure 5. Acknowledge on the I²C Bus

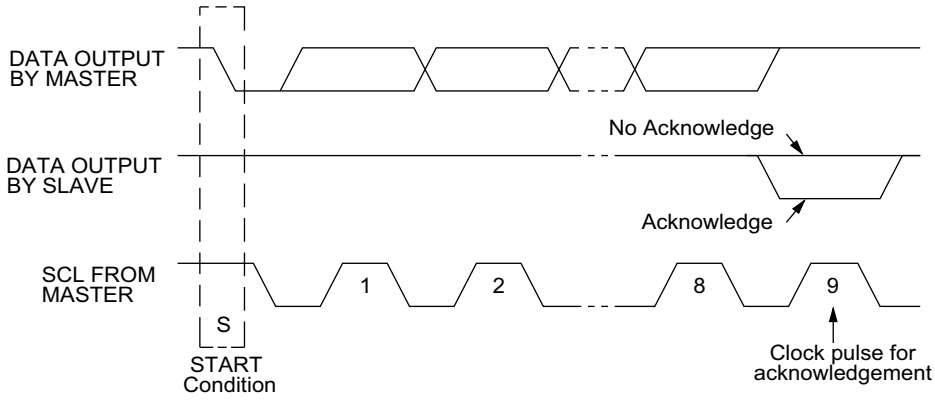

Slave Device Address

The first byte that the CY15E064J expects after a START condition is the slave address. As shown in Figure 6, the slave address contains the device type or slave ID, the device select address bits, and a bit that specifies if the transaction is a read or a write.

Bits 7–4 are the device type (slave ID) and should be set to 1010b for the CY15E064J. These bits allow other function types to reside on the I^2C bus within an identical address range. Bits 3–1 are the device select address bits. They must match the corresponding value on the external address pins to select the device. Up to eight CY15E064J devices can reside on the same I^2C bus by assigning a different address to each. Bit 0 is the read/write bit (R/W). R/W = '1' indicates a read operation and R/W = '0' indicates a write operation.

Figure 6. Memory Slave Device Address

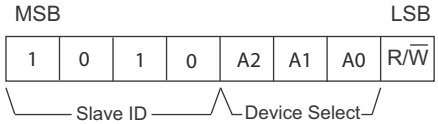

Addressing Overview

After the CY15E064J (as receiver) acknowledges the slave address, the master can place the memory address on the bus for a write operation. The address requires two bytes. The complete 13-bit address is latched internally. Each access causes the latched address value to be incremented automatically. The current address is the value that is held in the latch; either a newly written value or the address following the last access. The current address will be held for as long as power remains or until a new value is written. Reads always use the current address. A random read address can be loaded by beginning a write operation as explained below.

After transmission of each data byte, just prior to the acknowledge, the CY15E064J increments the internal address latch. This allows the next sequential byte to be accessed with no additional addressing. After the last address (1FFFh) is reached, the address latch will roll over to 0000h. There is no limit to the number of bytes that can be accessed with a single read or write operation.

Data Transfer

After the address bytes have been transmitted, data transfer between the bus master and the CY15E064J can begin. For a read operation the CY15E064J will place 8 data bits on the bus then wait for an acknowledge from the master. If the acknowledge occurs, the CY15E064J will transfer the next sequential byte. If the acknowledge is not sent, the CY15E064J will end the read operation. For a write operation, the CY15E064J will accept 8 data bits from the master then send an acknowledge. All data transfer occurs MSB (most significant bit) first.

Memory Operation

The CY15E064J is designed to operate in a manner very similar to other I^2C interface memory products. The major differences result from the higher performance write capability of F-RAM technology. These improvements result in some differences between the CY15E064J and a similar configuration EEPROM during writes. The complete operation for both writes and reads is explained below.

Write Operation

All writes begin with a slave address, then a memory address. The bus master indicates a write operation by setting the LSB of the slave address (R/W bit) to a '0'. After addressing, the bus master sends each byte of data to the memory and the memory generates an acknowledge condition. Any number of sequential bytes may be written. If the end of the address range is reached internally, the address counter will wrap from 1FFFh to 0000h.

Unlike other nonvolatile memory technologies, there is no effective write delay with F-RAM. Since the read and write access times of the underlying memory are the same, the user experiences no delay through the bus. The entire memory cycle occurs in less time than a single bus clock. Therefore, any operation including read or write can occur immediately following a write. Acknowledge polling, a technique used with EEPROMs to determine if a write is complete is unnecessary and will always return a ready condition.

Internally, an actual memory write occurs after the 8th data bit is transferred. It will be complete before the acknowledge is sent. Therefore, if the user desires to abort a write without altering the memory contents, this should be done using START or STOP condition prior to the 8th data bit. The CY15E064J uses no page buffering.

The memory array can be write-protected using the WP pin. Setting the WP pin to a HIGH condition (V_{DD}) will write-protect all addresses. The CY15E064J will not acknowledge data bytes that are written to protected addresses. In addition, the address counter will not increment if writes are attempted to these addresses. Setting WP to a LOW state (V_{SS}) will disable the write protect. WP is pulled down internally.

Figure 7 and Figure 8 on page 7 below illustrate a single-byte and multiple-byte write cycles.

Figure 7. Single-Byte Write

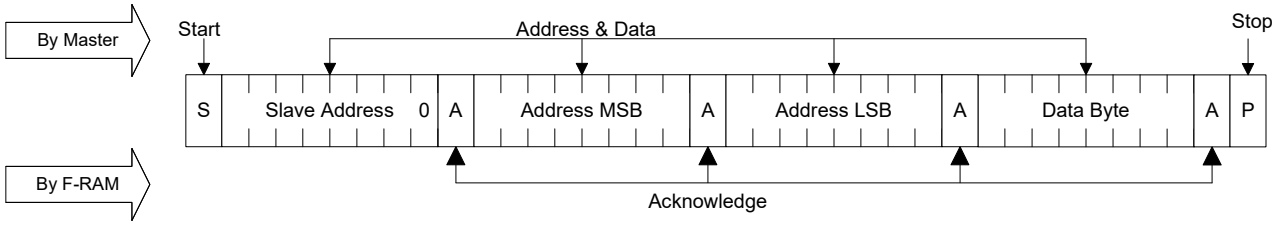

Figure 8. Multi-Byte Write

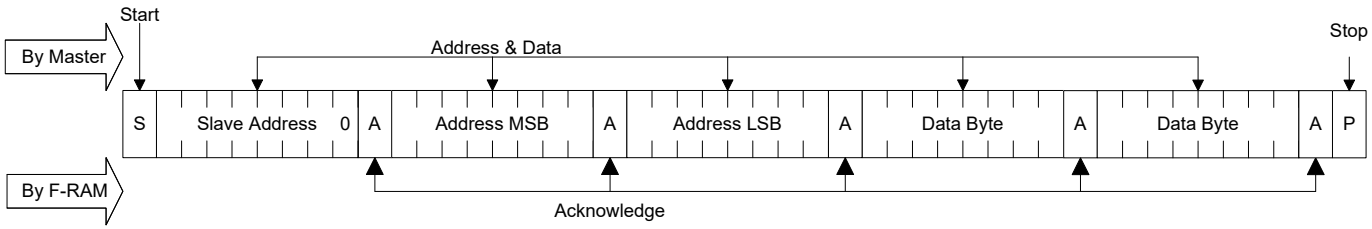

Read Operation

There are two basic types of read operations. They are current address read and selective address read. In a current address read, the CY15E064J uses the internal address latch to supply the address. In a selective read, the user performs a procedure to set the address to a specific value.

Current Address & Sequential Read

As mentioned above the CY15E064J uses an internal latch to supply the address for a read operation. A current address read uses the existing value in the address latch as a starting place for the read operation. The system reads from the address immediately following that of the last operation.

To perform a current address read, the bus master supplies a slave address with the LSB set to a '1'. This indicates that a read operation is requested. After receiving the complete slave address, the CY15E064J will begin shifting out data from the current address on the next clock. The current address is the value held in the internal address latch.

Beginning with the current address, the bus master can read any number of bytes. Thus, a sequential read is simply a current address read with multiple byte transfers. After each byte the internal address counter will be incremented.

Note Each time the bus master acknowledges a byte, this indicates that the CY15E064J should read out the next sequential byte.

There are four ways to properly terminate a read operation. Failing to properly terminate the read will most likely create a bus contention as the CY15E064J attempts to read out additional data onto the bus. The four valid methods are:

1. The bus master issues a no-acknowledge in the 9th clock cycle and a STOP in the 10th clock cycle. This is illustrated in the diagrams below. This is preferred.
2. The bus master issues a no-acknowledge in the 9th clock cycle and a START in the 10th.
3. The bus master issues a STOP in the 9th clock cycle.
4. The bus master issues a START in the 9th clock cycle.

If the internal address reaches 1FFFh, it will wrap around to 0000h on the next read cycle. Figure 9 and Figure 10 below show the proper operation for current address reads.

Figure 9. Current Address Read

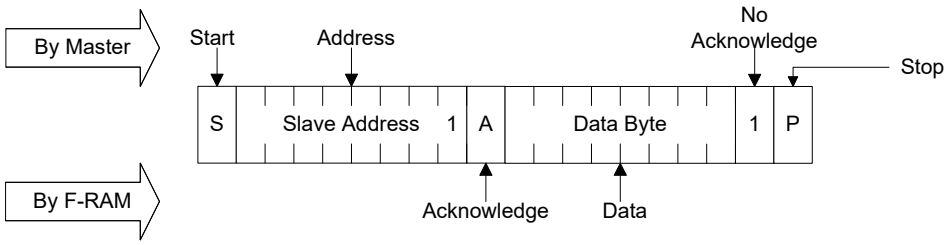

Figure 10. Sequential Read

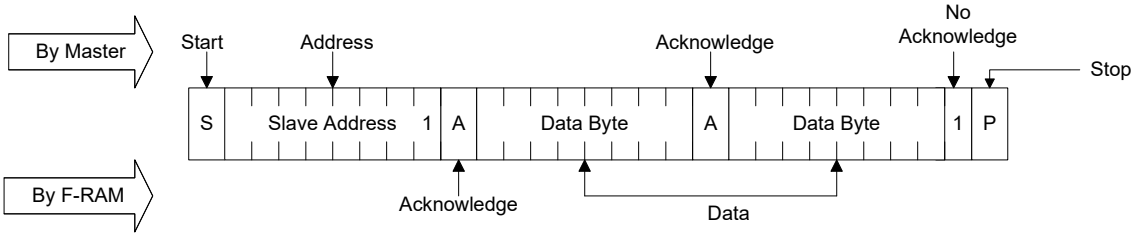

Selective (Random) Read

There is a simple technique that allows a user to select a random address location as the starting point for a read operation. This involves using the first three bytes of a write operation to set the internal address followed by subsequent read operations.

To perform a selective read, the bus master sends out the slave address with the LSB (R/W) set to 0. This specifies a write operation. According to the write protocol, the bus master then sends the address bytes that are loaded into the internal address latch. After the CY15E064J acknowledges the address, the bus master issues a START condition. This simultaneously aborts the write operation and allows the read command to be issued with the slave address LSB set to a '1'. The operation is now a current address read.

Figure 11. Selective (Random) Read

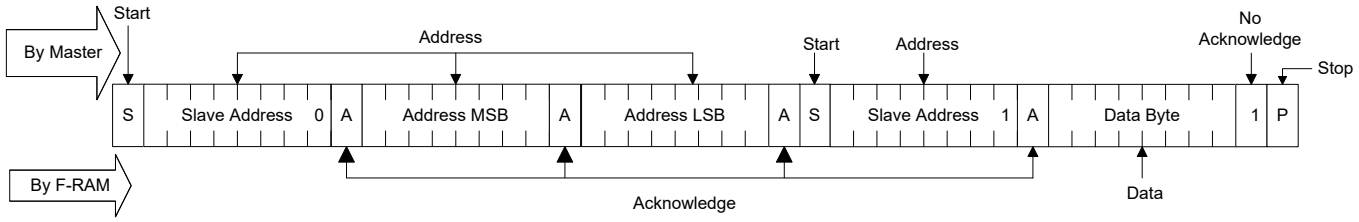

Endurance

The CY15E064J internally operates with a read and restore mechanism. Therefore, endurance cycles are applied for each read or write cycle. The memory architecture is based on an array of rows and columns. Each read or write access causes an endurance cycle for an entire row. In the CY15E064J, a row is 64 bits wide. Every 8-byte boundary marks the beginning of a new row. Endurance can be optimized by ensuring frequently accessed data is located in different rows. Regardless, FRAM read and write endurance is effectively unlimited at the 1MHz I^2C speed. Even at 3000 accesses per second to the same segment, 10 years time will elapse before 1 trillion endurance cycles occur.

Maximum Ratings

Exceeding maximum ratings may shorten the useful life of the device. These user guidelines are not tested.

Storage temperature ..... –65 °C to +150 °C

Maximum accumulated storage time
At 150 °C ambient temperature ..... 1000 h
At 125 °C ambient temperature ..... 11000 h
At 85 °C ambient temperature ..... 121 Years

Ambient temperature
with power applied ..... –55 °C to +125 °C

Supply voltage on V_{DD} relative to V_{SS} .....–1.0 V to +7.0 V

Input voltage ..... –1.0 V to + 7.0 V and $V_{IN} < V_{DD} + 1.0$ V

DC voltage applied to outputs
in High-Z state ..... –0.5 V to V_{DD} + 0.5 V

Transient voltage (< 20 ns)
on any pin to ground potential ..... –2.0 V to V_{DD} + 2.0 V

Package power dissipation capability
(T_A = 25 °C) ..... 1.0 W

Surface mount lead soldering temperature
(10 seconds) ..... +260 °C

Electrostatic Discharge Voltage [1]
Human Body Model (AEC-Q100-002 Rev. E) ..... 2 kV
Charged Device Model (AEC-Q100-011 Rev. B) ..... 500 V

Latch-up current ..... > 140 mA

* Exception: The "$V_{IN} < V_{DD} + 1.0$ V" restriction does not apply to the SCL and SDA inputs.

Operating Range

Range	Ambient Temperature (T_A)	V_{DD}
Automotive-E	–40 °C to +125 °C	4.5 V to 5.5 V

DC Electrical Characteristics

Over the Operating Range

Parameter	Description	Test Conditions		Min	Typ [2]	Max	Unit
V_{DD}	Power supply			4.5	5.0	5.5	V
I_{DD}	Average V_{DD} current	SCL toggling between V_{DD} – 0.3 V and V_{SS}, other inputs V_{SS} or V_{DD} – 0.3 V.	f_{SCL} = 100 kHz	–	–	250	µA
			f_{SCL} = 400 kHz	–	–	400	µA
			f_{SCL} = 1 MHz	–	–	450	µA
I_{SB}	Standby current	SCL = SDA = V_{DD}. All other inputs V_{SS} or V_{DD}. Stop command issued.	T_A = 85 °C	–	–	10	µA
			T_A = 125 °C	–	–	40	µA
I_{LI}	Input leakage current (Except WP and A2–A0)	$V_{SS} \le V_{IN} \le V_{DD}$		–1	–	+1	µA
	Input leakage current (for WP and A2–A0)	$V_{SS} \le V_{IN} \le V_{DD}$		–1	–	+100	µA
I_{LO}	Output leakage current	$V_{SS} \le V_{IN} \le V_{DD}$		–1	–	+1	µA
V_{IH}	Input HIGH voltage			0.75 × V_{DD}	–	V_{DD} + 0.3	V
V_{IL}	Input LOW voltage			–0.3	–	0.25 × V_{DD}	V
V_{OL}	Output LOW voltage	I_{OL} = 3 mA		–	–	0.4	V
R_{in} [3]	Input resistance (WP, A2-A0)	For $V_{IN} = V_{IL\ (Max)}$		40	–	–	kΩ
		For $V_{IN} = V_{IH\ (Min)}$		1	–	–	MΩ
V_{HYS} [4]	Input hysteresis			0.05 × V_{DD}	–	–	V

Notes
1. Electrostatic Discharge voltages specified in the datasheet are the AEC-Q100 standard limits used for qualifying the device. To know the maximum value device passes for, please refer to the device qualification report available on the website.
2. Typical values are at 25 °C, $V_{DD} = V_{DD}$ (typ). Not 100% tested.
3. The input pull-down circuit is strong (40 kΩ) when the input voltage is below V_{IL} and weak (1 MΩ) when the input voltage is above V_{IH}.
4. This parameter is guaranteed by design and is not tested.

Data Retention and Endurance

Parameter	Description	Test condition	Min	Max	Unit
T_{DR}	Data retention	T_A = 125 °C	11000	–	Hours
		T_A = 105 °C	11	–	Years
		T_A = 85 °C	121	–	Years
NV_C	Endurance	Over Operating Temperature	10^{13}	–	Cycles

Example of an F-RAM Life Time in an AEC-Q100 Automotive Application

An application does not operate under a steady temperature for the entire usage life time of the application. Instead, it is often expected to operate in multiple temperature environments throughout the application's usage life time. Accordingly, the retention specification for F-RAM in applications often needs to be calculated cumulatively. An example calculation for a multi-temperature thermal profiles is given below.

Temperature T	Time Factor t	Acceleration Factor with respect to Tmax A [5]	Profile Factor P	Profile Life Time L (P)
		$A = \frac{L(T)}{L(Tmax)} = e^{\frac{Ea}{k}\left(\frac{1}{T} - \frac{1}{Tmax}\right)}$	$P = \frac{1}{\left(\frac{t1}{A1} + \frac{t2}{A2} + \frac{t3}{A3} + \frac{t4}{A4}\right)}$	$L(P) = P \times L(Tmax)$
T1 = 125 °C	t1 = 0.1	A1 = 1	8.33	> 10.46 Years
T2 = 105 °C	t2 = 0.15	A2 = 8.67		
T3 = 85 °C	t3 = 0.25	A3 = 95.68		
T4 = 55 °C	t4 = 0.50	A4 = 6074.80		

Capacitance

Parameter [6]	Description	Test Conditions	Max	Unit
C_O	Output pin capacitance (SDA)	T_A = 25 °C, f = 1 MHz, $V_{DD} = V_{DD}$(typ)	8	pF
C_I	Input pin capacitance		6	pF

Thermal Resistance

Parameter [6]	Description	Test Conditions	8-pin SOIC	Unit
Θ_{JA}	Thermal resistance (junction to ambient)	Test conditions follow standard test methods and procedures for measuring thermal impedance, per EIA/JESD51.	147	°C/W
Θ_{JC}	Thermal resistance (junction to case)		47	°C/W

Notes
5. Where k is the Boltzmann constant 8.617 × 10^{-5} eV/K, Tmax is the highest temperature specified for the product, and T is any temperature within the F-RAM product specification. All temperatures are in Kelvin in the equation.
6. This parameter is periodically sampled and not 100% tested.

AC Test Loads and Waveforms

Figure 12. AC Test Loads and Waveforms

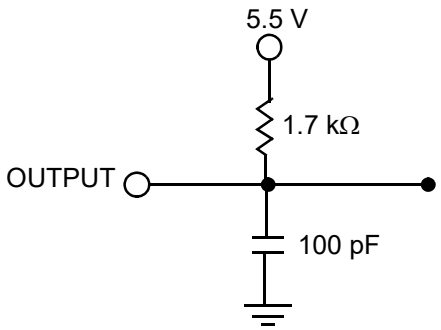

AC Test Conditions

Input pulse levels .....10% and 90% of V_{DD}
Input rise and fall times .....10 ns
Input and output timing reference levels .....0.5 × V_{DD}
Output load capacitance ..... 100 pF

AC Switching Characteristics

Over the Operating Range

Parameters [7]		Description	Min	Max	Min	Max	Min	Max	Unit
Cypress Parameter	Alt. Parameter								
f_{SCL}[8]		SCL clock frequency	–	0.1	–	0.4	–	1.0	MHz
$t_{SU;\ STA}$		Start condition setup for repeated Start	4.7	–	0.6	–	0.25	–	µs
$t_{HD;STA}$		Start condition hold time	4.0	–	0.6	–	0.25	–	µs
t_{LOW}		Clock LOW period	4.7	–	1.3	–	0.6	–	µs
t_{HIGH}		Clock HIGH period	4.0	–	0.6	–	0.4	–	µs
$t_{SU;DAT}$	$t_{SU;DATA}$	Data in setup	250	–	100	–	100	–	ns
$t_{HD;DAT}$	$t_{HD;DATA}$	Data in hold	0	–	0	–	0	–	ns
t_{DH}		Data output hold (from SCL @ V_{IL})	0	–	0	–	0	–	ns
t_R[9]	t_r	Input rise time	–	1000	–	300	–	300	ns
t_F[9]	t_f	Input fall time	–	300	–	300	–	100	ns
$t_{SU;STO}$		STOP condition setup	4.0	–	0.6	–	0.25	–	µs
t_{AA}	$t_{VD;DATA}$	SCL LOW to SDA Data Out Valid	–	3	–	0.9	–	0.55	µs
t_{BUF}		Bus free before new transmission	4.7	–	1.3	–	0.5	–	µs
t_{SP}		Noise suppression time constant on SCL, SDA	–	50	–	50	–	50	ns

Figure 13. Read Bus Timing Diagram

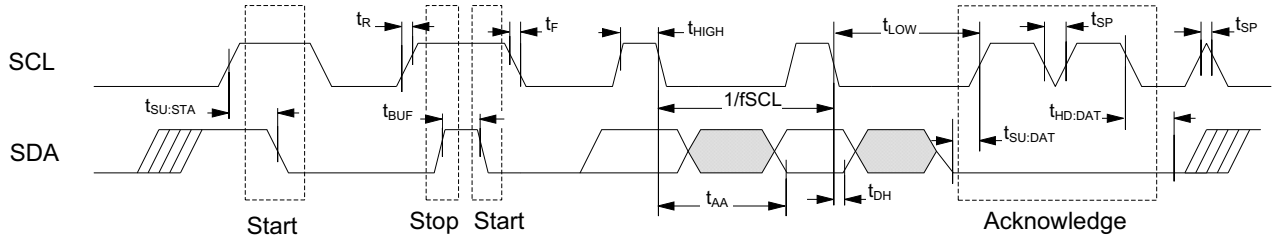

Figure 14. Write Bus Timing Diagram

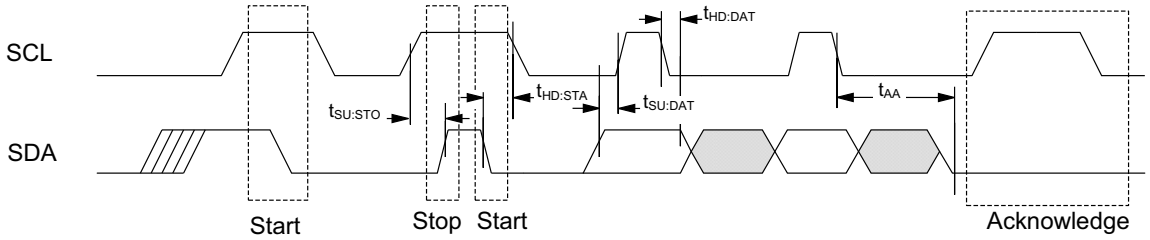

Notes

7. Test conditions assume signal transition time of 10 ns or less, timing reference levels of $V_{DD}/2$, input pulse levels of 0 to V_{DD}(typ), and output loading of the specified I_{OL} and load capacitance shown in Figure 12.
8. The speed-related specifications are guaranteed characteristic points along a continuous curve of operation from DC to f_{SCL} (max).
9. These parameters are guaranteed by design and are not tested.

Power Cycle Timing

Over the Operating Range

Parameter	Description	Min	Max	Unit
t_{PU}	Power-up V_{DD}(min) to first access (START condition)	10	–	ms
t_{PD}	Last access (STOP condition) to power-down (V_{DD}(min))	0	–	µs
t_{VR} [10, 11]	V_{DD} power-up ramp rate	30	–	µs/V
t_{VF} [10, 11]	V_{DD} power-down ramp rate	30	–	µs/V

Figure 15. Power Cycle Timing

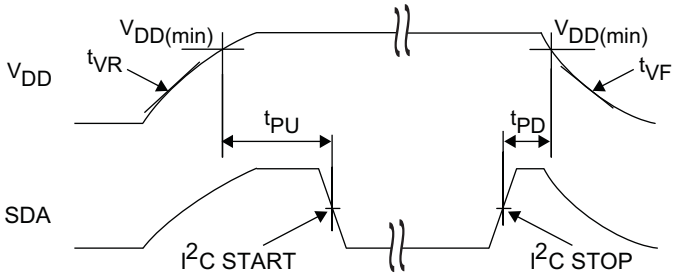

Notes
10. Slope measured at any point on the V_{DD} waveform.
11. Guaranteed by design.

Ordering Information

Ordering Code	Package Diagram	Package Type	Operating Range
CY15E064J-SXE	51-85066	8-pin SOIC	Automotive-E
CY15E064J-SXET			

All these parts are Pb-free. Contact your local Cypress sales representative for availability of these parts.

Ordering Code Definitions

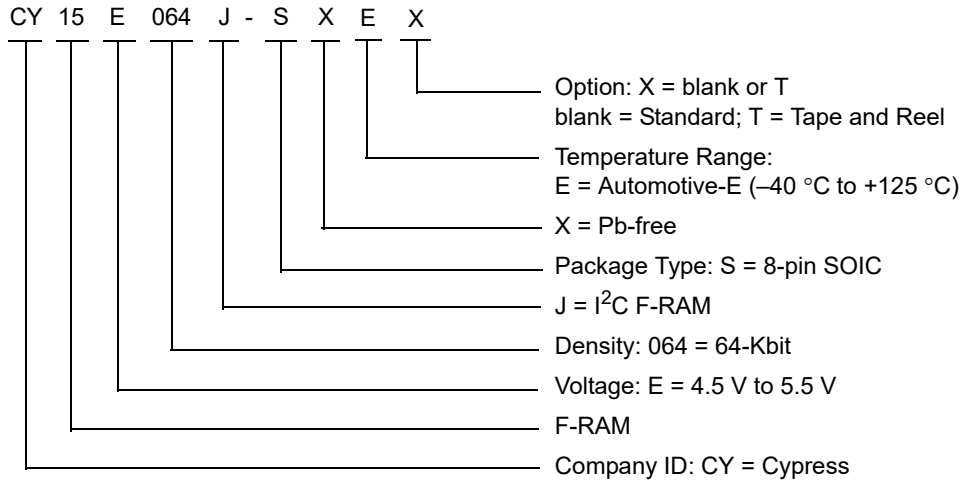

Package Diagram

Figure 16. 8-pin SOIC (150 Mils) Package Outline, 51-85066

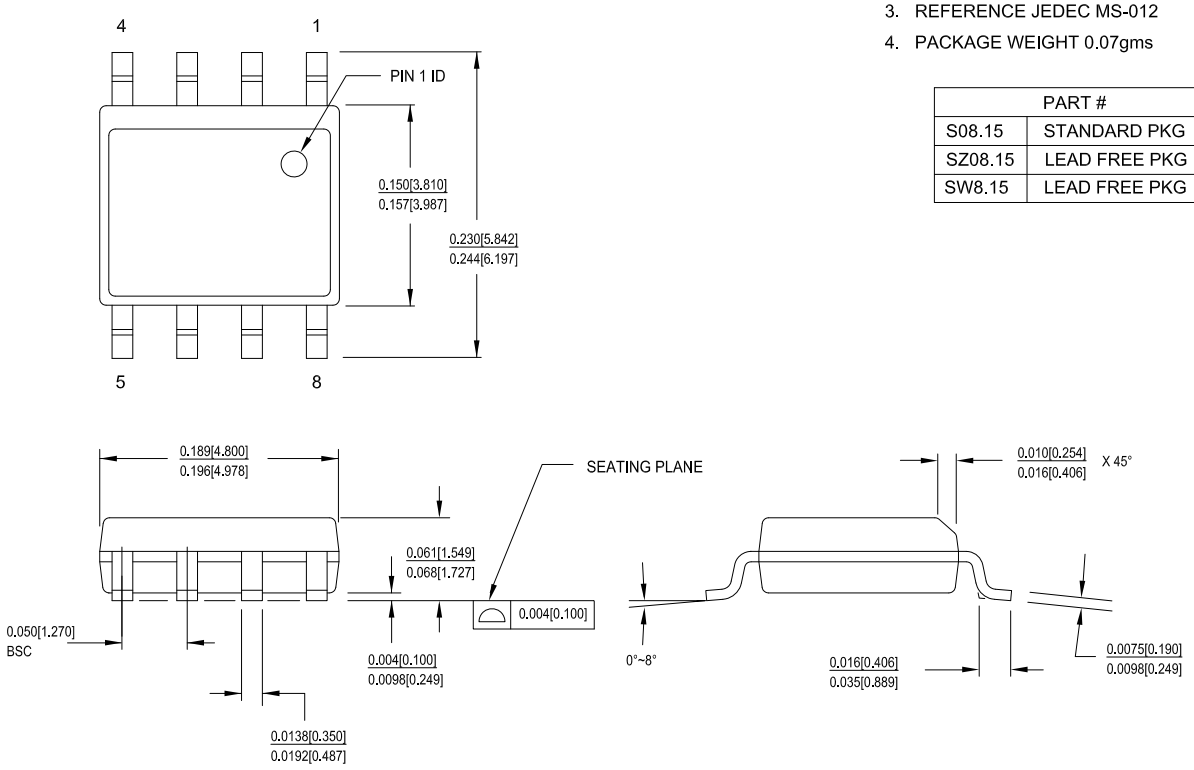

Acronyms

Acronym	Description
ACK	Acknowledge
CMOS	Complementary Metal Oxide Semiconductor
EIA	Electronic Industries Alliance
I^2C	Inter-Integrated Circuit
I/O	Input/Output
JEDEC	Joint Electron Devices Engineering Council
LSB	Least Significant Bit
MSB	Most Significant Bit
NACK	No Acknowledge
RoHS	Restriction of Hazardous Substances
R/$\overline{W}$	Read/Write
SCL	Serial Clock Line
SDA	Serial Data Access
SOIC	Small Outline Integrated Circuit
WP	Write Protect

Document Conventions

Units of Measure

Symbol	Unit of Measure
°C	degree Celsius
Hz	hertz
Kb	1024 bit
kHz	kilohertz
kΩ	kilohm
MHz	megahertz
MΩ	megaohm
µA	microampere
µs	microsecond
mA	milliampere
ms	millisecond
ns	nanosecond
Ω	ohm
%	percent
pF	picofarad
V	volt
W	watt

Document History Page

Document Title: CY15E064J, 64-Kbit (8K × 8) Serial (I^2C) Automotive-E F-RAM Document Number: 002-10554				
Rev.	**ECN No.**	**Orig. of Change**	**Submission Date**	**Description of Change**
**	5076000	GVCH	01/12/2016	New data sheet.
*A	5564687	GVCH	01/27/2017	Changed status from Preliminary to Final. Updated Maximum Ratings: Updated Electrostatic Discharge Voltage (in compliance with AEC-Q100 standard): Changed value of “Human Body Model” from 4 kV to 2 kV. Changed value of “Charged Device Model” from 1.25 kV to 500 V. Removed Machine Model related information. Updated to new template.
*B	5694541	GVCH	04/13/2017	Updated Maximum Ratings: Added Note 1 and referred the same note in “Electrostatic Discharge Voltage”. Updated to new template.
*C	6391616	GVCH	11/22/2018	Updated Maximum Ratings: Replaced “–55 °C to +150 °C” with “–65 °C to +150 °C” in ratings corresponding to “Storage temperature”. Updated Package Diagram: spec 51-85066 – Changed revision from *H to *I. Updated to new template. Completing Sunset Review.

Sales, Solutions, and Legal Information

Worldwide Sales and Design Support

Cypress maintains a worldwide network of offices, solution centers, manufacturer's representatives, and distributors. To find the office closest to you, visit us at Cypress Locations.

Products

Arm® Cortex® Microcontrollers	cypress.com/arm
Automotive	cypress.com/automotive
Clocks & Buffers	cypress.com/clocks
Interface	cypress.com/interface
Internet of Things	cypress.com/iot
Memory	cypress.com/memory
Microcontrollers	cypress.com/mcu
PSoC	cypress.com/psoc
Power Management ICs	cypress.com/pmic
Touch Sensing	cypress.com/touch
USB Controllers	cypress.com/usb
Wireless Connectivity	cypress.com/wireless

PSoC® Solutions

PSoC 1 | PSoC 3 | PSoC 4 | PSoC 5LP | PSoC 6 MCU

Cypress Developer Community

Community | Projects | Video | Blogs | Training | Components

Technical Support

cypress.com/support

© Cypress Semiconductor Corporation, 2016–2018. This document is the property of Cypress Semiconductor Corporation and its subsidiaries, including Spansion LLC ("Cypress"). This document, including any software or firmware included or referenced in this document ("Software"), is owned by Cypress under the intellectual property laws and treaties of the United States and other countries worldwide. Cypress reserves all rights under such laws and treaties and does not, except as specifically stated in this paragraph, grant any license under its patents, copyrights, trademarks, or other intellectual property rights. If the Software is not accompanied by a license agreement and you do not otherwise have a written agreement with Cypress governing the use of the Software, then Cypress hereby grants you a personal, non-exclusive, nontransferable license (without the right to sublicense) (1) under its copyright rights in the Software (a) for Software provided in source code form, to modify and reproduce the Software solely for use with Cypress hardware products, only internally within your organization, and (b) to distribute the Software in binary code form externally to end users (either directly or indirectly through resellers and distributors), solely for use on Cypress hardware product units, and (2) under those claims of Cypress's patents that are infringed by the Software (as provided by Cypress, unmodified) to make, use, distribute, and import the Software solely for use with Cypress hardware products. Any other use, reproduction, modification, translation, or compilation of the Software is prohibited.

TO THE EXTENT PERMITTED BY APPLICABLE LAW, CYPRESS MAKES NO WARRANTY OF ANY KIND, EXPRESS OR IMPLIED, WITH REGARD TO THIS DOCUMENT OR ANY SOFTWARE OR ACCOMPANYING HARDWARE, INCLUDING, BUT NOT LIMITED TO, THE IMPLIED WARRANTIES OF MERCHANTABILITY AND FITNESS FOR A PARTICULAR PURPOSE. No computing device can be absolutely secure. Therefore, despite security measures implemented in Cypress hardware or software products, Cypress does not assume any liability arising out of any security breach, such as unauthorized access to or use of a Cypress product. In addition, the products described in these materials may contain design defects or errors known as errata which may cause the product to deviate from published specifications. To the extent permitted by applicable law, Cypress reserves the right to make changes to this document without further notice. Cypress does not assume any liability arising out of the application or use of any product or circuit described in this document. Any information provided in this document, including any sample design information or programming code, is provided only for reference purposes. It is the responsibility of the user of this document to properly design, program, and test the functionality and safety of any application made of this information and any resulting product. Cypress products are not designed, intended, or authorized for use as critical components in systems designed or intended for the operation of weapons, weapons systems, nuclear installations, life-support devices or systems, other medical devices or systems (including resuscitation equipment and surgical implants), pollution control or hazardous substances management, or other uses where the failure of the device or system could cause personal injury, death, or property damage ("Unintended Uses"). A critical component is any component of a device or system whose failure to perform can be reasonably expected to cause the failure of the device or system, or to affect its safety or effectiveness. Cypress is not liable, in whole or in part, and you shall and hereby do release Cypress from any claim, damage, or other liability arising from or related to all Unintended Uses of Cypress products. You shall indemnify and hold Cypress harmless from and against all claims, costs, damages, and other liabilities, including claims for personal injury or death, arising from or related to any Unintended Uses of Cypress products.

Cypress, the Cypress logo, Spansion, the Spansion logo, and combinations thereof, WICED, PSoC, CapSense, EZ-USB, F-RAM, and Traveo are trademarks or registered trademarks of Cypress in the United States and other countries. For a more complete list of Cypress trademarks, visit cypress.com. Other names and brands may be claimed as property of their respective owners.