Please note that Cypress is an Infineon Technologies Company.
The document following this cover page is marked as “Cypress” document as this is the company that originally developed the product. Please note that Infineon will continue to offer the product to new and existing customers as part of the Infineon product portfolio.

Continuity of document content
The fact that Infineon offers the following product as part of the Infineon product portfolio does not lead to any changes to this document. Future revisions will occur when appropriate, and any changes will be set out on the document history page.

Continuity of ordering part numbers
Infineon continues to support existing part numbers. Please continue to use the ordering part numbers listed in the datasheet for ordering.

CG7501AA

4-Mbit (512 K × 8) nvSRAM

Features

- 45 ns access time
- Internally organized as 512 K × 8
- Hands off automatic STORE on power-down with only a small capacitor
- STORE to QuantumTrap non-volatile elements initiated by software, device pin, or AutoStore on power-down
- RECALL to SRAM initiated by software or power-up
- Infinite read, write, and recall cycles
- 1 million STORE cycles to QuantumTrap
- 20 year data retention
- Single 3 V +20%, –10% operation
- Industrial temperature
- Package
  - 48-ball fine-pitch ball grid array (FBGA)
- Pb-free and restriction of hazardous substances (RoHS) compliant

Functional Description

The Cypress CG7501AA is a fast static RAM (SRAM), with a non-volatile element in each memory cell. The memory is organized as 512 K bytes of 8 bits each. The embedded non-volatile elements incorporate QuantumTrap technology, producing the world's most reliable non-volatile memory. The SRAM provides infinite read and write cycles, while independent non-volatile data resides in the highly reliable QuantumTrap cell. Data transfers from the SRAM to the non-volatile elements (the STORE operation) takes place automatically at power-down. On power-up, data is restored to the SRAM (the RECALL operation) from the non-volatile memory. Both the STORE and RECALL operations are also available under software control.

Logic Block Diagram

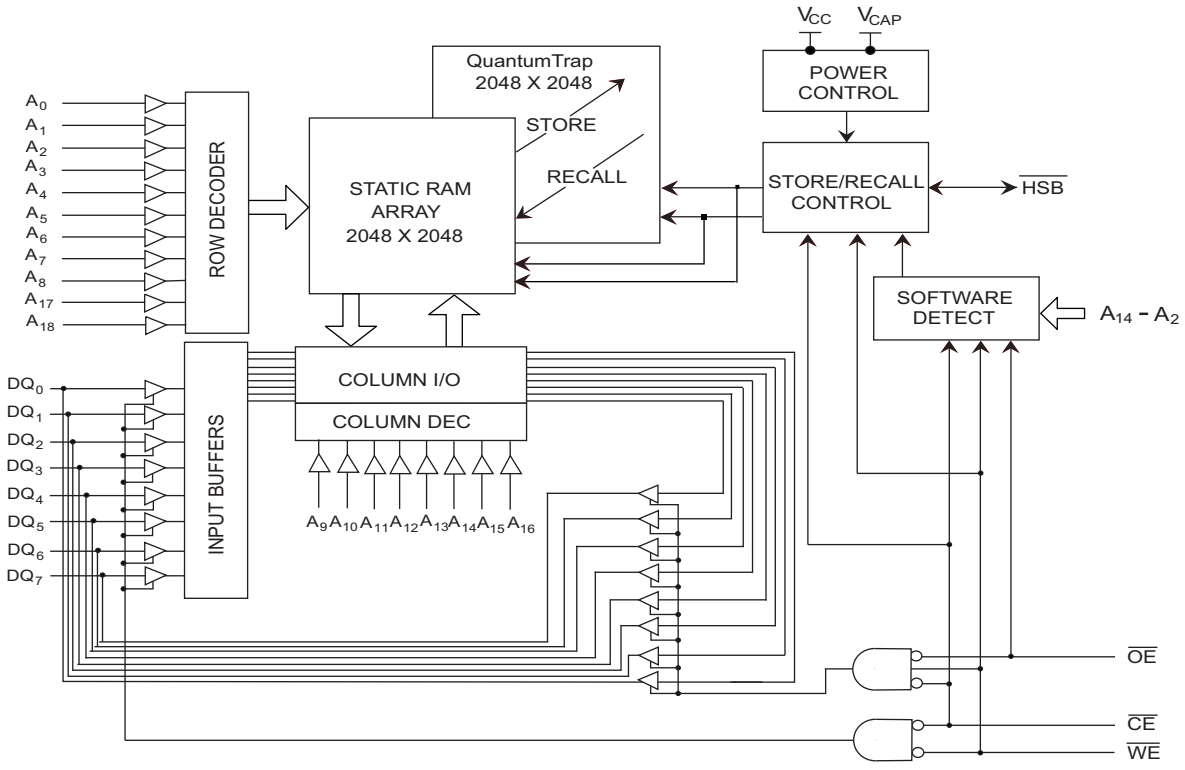

Contents

Pinout **3**
Pin Definitions **4**
Device Operation **5**
SRAM Read 5
SRAM Write 5
AutoStore Operation 5
Hardware STORE Operation 5
Hardware RECALL (Power-Up) 6
Software STORE 6
Software RECALL 6
Preventing AutoStore 7
Data Protection 7
Maximum Ratings **8**
Operating Range **8**
DC Electrical Characteristics **8**
Data Retention and Endurance **9**
Capacitance **9**
Thermal Resistance **9**
AC Test Loads **10**
AC Test Conditions **10**
AC Switching Characteristics **11**
Switching Waveforms **11**
AutoStore/Power-Up RECALL **13**
Switching Waveforms – AutoStore/ Power-up RECALL **13**
Software Controlled STORE/RECALL Cycle **14**
Switching Waveforms – Software Controlled STORE/RECALL Cycle **14**
Hardware STORE Cycle **15**
Switching Waveforms – Hardware STORE Cycle **15**
Truth Table For SRAM Operations **16**
Ordering Information **16**
Ordering Code Definitions 16
Package Diagrams **17**
Acronyms **18**
Document Conventions **18**
Units of Measure 18
Document History Page **19**
Sales, Solutions, and Legal Information **20**
Worldwide Sales and Design Support 20
Products 20
PSoC Solutions 20

Pinout

Figure 1. 48-ball FBGA pinout

48-ball FBGA
(× 8)
Top View
(not to scale)

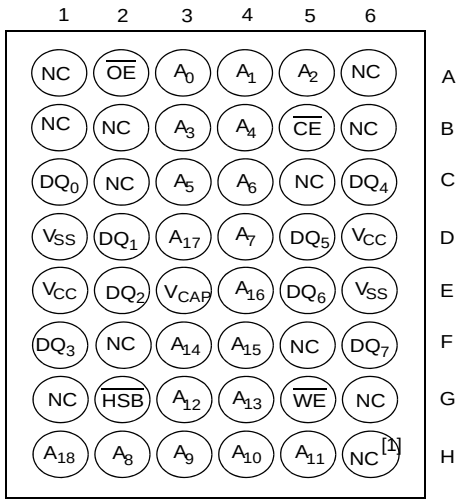

Notes
1. Address expansion for 8-Mbit. NC pin not connected to die.
2. Address expansion for 16-Mbit. NC pin not connected to die.

Pin Definitions

Pin Name	I/O Type	Description
A_0–A_{18}	Input	**Address inputs.** Used to select one of the 524,288 bytes of the nvSRAM.
DQ_0–DQ_7	Input/Output	**Bidirectional data I/O lines**. Used as input or output lines depending on operation.
$\overline{WE}$	Input	**Write Enable input, Active LOW**. When selected LOW, data on the I/O pins is written to the specific address location.
$\overline{CE}$	Input	**Chip Enable input, Active LOW**. When LOW, selects the chip. When HIGH, deselects the chip.
$\overline{OE}$	Input	**Output Enable, Active LOW**. The active LOW $\overline{OE}$ input enables the data output buffers during read cycles. I/O pins are tristated on deasserting $\overline{OE}$ HIGH.
V_{SS}	Ground	**Ground for the device**. Must be connected to the ground of the system.
V_{CC}	Power supply	**Power supply inputs to the device**.
$\overline{HSB}$	Input/Output	**Hardware STORE Busy (HSB)**. When LOW this output indicates that a Hardware STORE is in progress. When pulled LOW external to the chip it initiates a non-volatile STORE operation. After each Hardware and Software STORE operation, $\overline{HSB}$ is driven HIGH for a short time (t_{HHHD}) with standard output high current, and then a weak internal pull-up resistor keeps this pin HIGH (external pull-up resistor connection optional).
V_{CAP}	Power supply	**AutoStore Capacitor**. Supplies power to the nvSRAM during power loss to store data from SRAM to non-volatile elements.
NC	No connect	**No Connect**. This pin is not connected to the die.

Device Operation

The CG7501AA nvSRAM is made up of two functional components paired in the same physical cell. They are a SRAM memory cell and a non-volatile QuantumTrap cell. The SRAM memory cell operates as a standard fast static RAM. Data in the SRAM is transferred to the non-volatile cell (the STORE operation), or from the non-volatile cell to the SRAM (the RECALL operation). Using this unique architecture, all cells are stored and recalled in parallel. During the STORE and RECALL operations, SRAM read and write operations are inhibited. The CG7501AA supports infinite reads and writes similar to a typical SRAM. In addition, it provides infinite RECALL operations from the non-volatile cells and up to 1 million STORE operations. Refer to the Truth Table For SRAM Operations on page 16 for a complete description of read and write modes.

SRAM Read

The CG7501AA performs a read cycle when $\overline{CE}$ and $\overline{OE}$ are LOW and $\overline{WE}$ and $\overline{HSB}$ are HIGH. The address specified on pins $A_{0–18}$ determines which of the 524,288 data bytes are accessed. When the read is initiated by an address transition, the outputs are valid after a delay of t_{AA} (read cycle 1). If the read is initiated by $\overline{CE}$ or $\overline{OE}$, the outputs are valid at t_{ACE} or at t_{DOE}, whichever is later (read cycle 2). The data output repeatedly responds to address changes within the t_{AA} access time without the need for transitions on any control input pins. This remains valid until another address change or until $\overline{CE}$ or $\overline{OE}$ is brought HIGH, or $\overline{WE}$ or $\overline{HSB}$ is brought LOW.

SRAM Write

A write cycle is performed when $\overline{CE}$ and $\overline{WE}$ are LOW and $\overline{HSB}$ is HIGH. The address inputs must be stable before entering the write cycle and must remain stable until $\overline{CE}$ or $\overline{WE}$ goes HIGH at the end of the cycle. The data on the common I/O pins $DQ_{0–7}$ are written into the memory if the data is valid (t_{SD} time) before the end of a $\overline{WE}$ controlled write or before the end of an $\overline{CE}$ controlled write. It is recommended that $\overline{OE}$ be kept HIGH during the entire write cycle to avoid data bus contention on common I/O lines. If $\overline{OE}$ is left LOW, internal circuitry turns off the output buffers t_{HZWE} after $\overline{WE}$ goes LOW.

AutoStore Operation

The CG7501AA stores data to the nvSRAM using one of the following three storage operations: Hardware STORE activated by the $\overline{HSB}$; Software STORE activated by an address sequence; AutoStore on device power-down. The AutoStore operation is a unique feature of QuantumTrap technology and is enabled by default on the CG7501AA.

During a normal operation, the device draws current from V_{CC} to charge a capacitor connected to the V_{CAP} pin. This stored charge is used by the chip to perform a single STORE operation. If the voltage on the V_{CC} pin drops below V_{SWITCH}, the part automatically disconnects the V_{CAP} pin from V_{CC}. A STORE operation is initiated with power provided by the V_{CAP} capacitor.

Note If the capacitor is not connected to V_{CAP} pin, AutoStore must be disabled using the soft sequence specified in Preventing AutoStore on page 7. In case AutoStore is enabled without a capacitor on V_{CAP} pin, the device attempts an AutoStore operation without sufficient charge to complete the Store. This corrupts the data stored in nvSRAM.

Figure 2 shows the proper connection of the storage capacitor (V_{CAP}) for automatic store operation. Refer to DC Electrical Characteristics on page 8 for the size of V_{CAP}. The voltage on the V_{CAP} pin is driven to V_{CC} by a regulator on the chip. A pull-up should be placed on $\overline{WE}$ to hold it inactive during power-up. This pull-up is effective only if the $\overline{WE}$ signal is tristate during power-up. Many MPUs tristate their controls on power-up. This should be verified when using the pull-up. When the nvSRAM comes out of power-on-RECALL, the MPU must be active or the $\overline{WE}$ held inactive until the MPU comes out of reset.

To reduce unnecessary non-volatile stores, AutoStore and hardware STORE operations are ignored unless at least one write operation has taken place since the most recent STORE or RECALL cycle. Software initiated STORE cycles are performed regardless of whether a write operation has taken place. The $\overline{HSB}$ signal is monitored by the system to detect if an AutoStore cycle is in progress.

Figure 2. AutoStore Mode

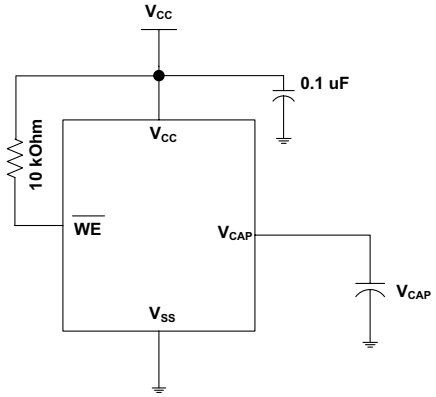

Hardware STORE Operation

The CG7501AA provides the $\overline{HSB}$ pin to control and acknowledge the STORE operations. The $\overline{HSB}$ pin is used to request a hardware STORE cycle. When the $\overline{HSB}$ pin is driven LOW, the CG7501AA conditionally initiates a STORE operation after t_{DELAY}. An actual STORE cycle only begins if a write to the SRAM has taken place since the last STORE or RECALL cycle. The $\overline{HSB}$ pin also acts as an open drain driver (internal 100 kΩ weak pull-up resistor) that is internally driven LOW to indicate a busy condition when the STORE (initiated by any means) is in progress.

Note After each Hardware and Software STORE operation $\overline{HSB}$ is driven HIGH for a short time (t_{HHHD}) with standard output high current and then remains HIGH by internal 100 kΩ pull-up resistor.

SRAM write operations that are in progress when $\overline{HSB}$ is driven LOW by any means are given time (t_{DELAY}) to complete before the STORE operation is initiated. However, any SRAM write cycles requested after $\overline{HSB}$ goes LOW are inhibited until $\overline{HSB}$ returns HIGH. In case the write latch is not set, $\overline{HSB}$ is not driven LOW by the CG7501AA. But any SRAM read and write cycles are inhibited until $\overline{HSB}$ is returned HIGH by MPU or other external source.

During any STORE operation, regardless of how it is initiated, the CG7501AA continues to drive the $\overline{HSB}$ pin LOW, releasing it

only when the STORE is complete. Upon completion of the STORE operation, the nvSRAM memory access is inhibited for t_{LZHSB} time after HSB pin returns HIGH. Leave the HSB unconnected if it is not used.

Hardware RECALL (Power-Up)

During power-up or after any low power condition (V_{CC}< V_{SWITCH}), an internal RECALL request is latched. When V_{CC} again exceeds the V_{SWITCH} on power up, a RECALL cycle is automatically initiated and takes $t_{HRECALL}$ to complete. During this time, the HSB pin is driven LOW by the HSB driver and all reads and writes to nvSRAM are inhibited.

Software STORE

Data is transferred from the SRAM to the non-volatile memory by a software address sequence. The CG7501AA software STORE cycle is initiated by executing sequential $\overline{CE}$ or $\overline{OE}$ controlled read cycles from six specific address locations in exact order. During the STORE cycle an erase of the previous non-volatile data is first performed, followed by a program of the non-volatile elements. After a STORE cycle is initiated, further input and output are disabled until the cycle is completed.

Because a sequence of reads from specific addresses is used for STORE initiation, it is important that no other read or write accesses intervene in the sequence, or the sequence is aborted and no STORE or RECALL takes place.

To initiate the software STORE cycle, the following read sequence must be performed.

1. Read address 0x4E38 Valid READ
2. Read address 0xB1C7 Valid READ
3. Read address 0x83E0 Valid READ
4. Read address 0x7C1F Valid READ
5. Read address 0x703F Valid READ
6. Read address 0x8FC0 Initiate STORE cycle

The software sequence may be clocked with $\overline{CE}$ controlled reads or $\overline{OE}$ controlled reads, with $\overline{WE}$ kept HIGH for all the six READ sequences. After the sixth address in the sequence is entered, the STORE cycle commences and the chip is disabled. HSB is driven LOW. After the t_{STORE} cycle time is fulfilled, the SRAM is activated again for the read and write operation.

Software RECALL

Data is transferred from the non-volatile memory to the SRAM by a software address sequence. A software RECALL cycle is initiated with a sequence of read operations in a manner similar to the software STORE initiation. To initiate the RECALL cycle, perform the following sequence of $\overline{CE}$ or $\overline{OE}$ controlled read operations must be performed.

1. Read address 0x4E38 Valid READ
2. Read address 0xB1C7 Valid READ
3. Read address 0x83E0 Valid READ
4. Read address 0x7C1F Valid READ
5. Read address 0x703F Valid READ
6. Read address 0x4C63 Initiate RECALL cycle

Internally, RECALL is a two step procedure. First, the SRAM data is cleared; then, the non-volatile information is transferred into the SRAM cells. After the t_{RECALL} cycle time, the SRAM is again ready for read and write operations. The RECALL operation does not alter the data in the non-volatile elements.

Table 1. Mode Selection

$\overline{CE}$	$\overline{WE}$	$\overline{OE}$	A_{15}–A_0[3]	Mode	I/O	Power
H	X	X	X	Not selected	Output high Z	Standby
L	H	L	X	Read SRAM	Output data	Active
L	L	X	X	Write SRAM	Input data	Active
L	H	L	0x4E38 0xB1C7 0x83E0 0x7C1F 0x703F 0x8B45	Read SRAM Read SRAM Read SRAM Read SRAM Read SRAM AutoStore Disable	Output data Output data Output data Output data Output data Output data	Active[4]

Notes
3. While there are 19 address lines on the CG7501AA, only 13 address lines (A_{14}–A_2) are used to control software modes. The remaining address lines are don't care.
4. The six consecutive address locations must be in the order listed. $\overline{WE}$ must be HIGH during all six cycles to enable a non-volatile cycle.

Table 1. Mode Selection (continued)

$\overline{CE}$	$\overline{WE}$	$\overline{OE}$	A_{15}–A_0[3]	Mode	I/O	Power
L	H	L	0x4E38 0xB1C7 0x83E0 0x7C1F 0x703F 0x4B46	Read SRAM Read SRAM Read SRAM Read SRAM Read SRAM AutoStore Enable	Output data Output data Output data Output data Output data Output data	Active[5]
L	H	L	0x4E38 0xB1C7 0x83E0 0x7C1F 0x703F 0x8FC0	Read SRAM Read SRAM Read SRAM Read SRAM Read SRAM Non-volatile STORE	Output data Output data Output data Output data Output data Output high Z	Active I_{CC2}[5]
L	H	L	0x4E38 0xB1C7 0x83E0 0x7C1F 0x703F 0x4C63	Read SRAM Read SRAM Read SRAM Read SRAM Read SRAM Non-volatile RECALL	Output data Output data Output data Output data Output data Output high Z	Active[5]

Preventing AutoStore

The AutoStore function is disabled by initiating an AutoStore disable sequence. A sequence of read operations is performed in a manner similar to the software STORE initiation. To initiate the AutoStore disable sequence, the following sequence of $\overline{CE}$ or $\overline{OE}$ controlled read operations must be performed:

1. Read address 0x4E38 Valid READ
2. Read address 0xB1C7 Valid READ
3. Read address 0x83E0 Valid READ
4. Read address 0x7C1F Valid READ
5. Read address 0x703F Valid READ
6. Read address 0x8B45 AutoStore Disable

The AutoStore is re-enabled by initiating an AutoStore enable sequence. A sequence of read operations is performed in a manner similar to the software RECALL initiation. To initiate the AutoStore enable sequence, the following sequence of $\overline{CE}$ or $\overline{OE}$ controlled read operations must be performed:

1. Read address 0x4E38 Valid READ
2. Read address 0xB1C7 Valid READ
3. Read address 0x83E0 Valid READ
4. Read address 0x7C1F Valid READ
5. Read address 0x703F Valid READ
6. Read address 0x4B46 AutoStore Enable

If the AutoStore function is disabled or re-enabled, a manual STORE operation (hardware or software) must be issued to save the AutoStore state through subsequent power-down cycles. The part comes from the factory with AutoStore enabled and 0x00 written in all cells.

Data Protection

The CG7501AA protects data from corruption during low voltage conditions by inhibiting all externally initiated STORE and write operations. The low voltage condition is detected when $V_{CC} < V_{SWITCH}$. If the CG7501AA is in a write mode (both $\overline{CE}$ and $\overline{WE}$ are LOW) at power-up, after a RECALL or STORE, the write is inhibited until the SRAM is enabled after t_{LZHSB} ($\overline{HSB}$ to output active). This protects against inadvertent writes during power-up or brown out conditions.

Note
5. The six consecutive address locations must be in the order listed. $\overline{WE}$ must be HIGH during all six cycles to enable a non-volatile cycle.

Maximum Ratings

Exceeding maximum ratings may shorten the useful life of the device. These user guidelines are not tested.

Storage temperature .....–65 °C to +150 °C

Maximum accumulated storage time

At 150 °C ambient temperature .....1000 h

At 85 °C ambient temperature .....20 Years

Maximum junction temperature.....150 °C

Supply voltage on V_{CC} relative to V_{SS} .....–0.5 V to 4.1 V

Voltage applied to outputs in high Z state ..... –0.5 V to V_{CC} + 0.5 V

Input voltage .....–0.5 V to Vcc + 0.5 V

Transient voltage (< 20 ns) on any pin to ground potential ..... –2.0 V to V_{CC} + 2.0 V

Package power dissipation capability (T_A = 25 °C) .....1.0 W

Surface mount Pb soldering temperature (3 Seconds) .....+260 °C

DC output current (1 output at a time, 1s duration) .....15 mA

Static discharge voltage (per MIL-STD-883, Method 3015) ..... > 2001 V

Latch-up current ..... > 200 mA

Operating Range

Range	Ambient Temperature	V_{CC}
Industrial	–40 °C to +85 °C	2.7 V to 3.6 V

DC Electrical Characteristics

Over the Operating Range

Parameter	Description	Test Conditions	Min	Typ [6]	Max	Unit
V_{CC}	Power supply		2.7	3.0	3.6	V
I_{CC1}	Average V_{CC} current	t_{RC} = 45 ns Values obtained without output loads (I_{OUT} = 0 mA)	–	–	52	mA
I_{CC2}	Average V_{CC} current during STORE	All inputs don't care, V_{CC} = Max Average current for duration t_{STORE}	–	–	10	mA
I_{CC3}	Average V_{CC} current at t_{RC}= 200 ns, $V_{CC(Typ)}$, 25 °C	All inputs cycling at CMOS levels. Values obtained without output loads (I_{OUT} = 0 mA).	–	35	–	mA
I_{CC4}	Average V_{CAP} current during AutoStore cycle	All inputs don't care. Average current for duration t_{STORE}	–	–	5	mA
I_{SB}	V_{CC} standby current	$\overline{CE} \geq (V_{CC} – 0.2\ V)$. $V_{IN} \leq 0.2$ V or $\geq (V_{CC} – 0.2\ V)$. Standby current level after non-volatile cycle is complete. Inputs are static. f = 0 MHz.	–	–	5	mA
I_{IX} [7]	Input leakage current (except HSB)	V_{CC} = Max, $V_{SS} \leq V_{IN} \leq V_{CC}$	–1	–	+1	µA
	Input leakage current (for $\overline{HSB}$)	V_{CC} = Max, $V_{SS} \leq V_{IN} \leq V_{CC}$	–100	–	+1	µA
I_{OZ}	Off-state output leakage current	V_{CC} = Max, $V_{SS} \leq V_{OUT} \leq V_{CC}$, $\overline{CE}$ or $\overline{OE} \geq V_{IH}$ or $\overline{WE} \leq V_{IL}$	–1	–	+1	µA
V_{IH}	Input HIGH voltage		2.0	–	V_{CC} + 0.5	V
V_{IL}	Input LOW voltage		V_{ss} – 0.5	–	0.8	V
V_{OH}	Output HIGH voltage	I_{OUT} = –2 mA	2.4	–	–	V
V_{OL}	Output LOW voltage	I_{OUT} = 4 mA	–	–	0.4	V

Notes

6. Typical values are at 25 °C, V_{CC} = $V_{CC(Typ)}$. Not 100% tested.
7. The $\overline{HSB}$ pin has I_{OUT} = –2 µA for V_{OH} of 2.4 V when both active HIGH and LOW drivers are disabled. When they are enabled standard V_{OH} and V_{OL} are valid. This parameter is characterized but not tested.

DC Electrical Characteristics (continued)

Over the Operating Range

Parameter	Description	Test Conditions	Min	Typ [6]	Max	Unit
V_{CAP}[8]	Storage capacitor	Between V_{CAP} pin and V_{SS}	61	68	180	µF
V_{VCAP}[9, 10]	Maximum voltage driven on V_{CAP} pin by the device	V_{CC} = Max	–	–	V_{CC}	V

Data Retention and Endurance

Over the Operating Range

Parameter	Description	Min	Unit
$DATA_R$	Data retention	20	Years
NV_C	Non-volatile STORE operations	1,000	K

Capacitance

Parameter[10]	Description	Test Conditions	Max	Unit
C_{IN}	Input capacitance (except $\overline{HSB}$)	T_A = 25 °C, f = 1 MHz, V_{CC} = $V_{CC(Typ)}$	7	pF
	Input capacitance (for $\overline{HSB}$)		8	pF
C_{OUT}	Output capacitance (except $\overline{HSB}$)		7	pF
	Output capacitance (for $\overline{HSB}$)		8	pF

Thermal Resistance

Parameter[10]	Description	Test Conditions	48-pin FBGA	Unit
Θ_{JA}	Thermal resistance (junction to ambient)	Test conditions follow standard test methods and procedures for measuring thermal impedance, in accordance with EIA/JESD51.	46.09	°C/W
Θ_{JC}	Thermal resistance (junction to case)		7.84	°C/W

Notes

8. Maximum voltage on V_{CAP} pin (V_{VCAP}) is provided for guidance when choosing the V_{CAP} capacitor. The voltage rating of the V_{CAP} capacitor across the operating temperature range should be higher than the V_{VCAP} voltage.
9. Min V_{CAP} value guarantees that there is a sufficient charge available to complete a successful AutoStore operation. Max V_{CAP} value guarantees that the capacitor on V_{CAP} is charged to a minimum voltage during a Power-Up RECALL cycle so that an immediate power-down cycle can complete a successful AutoStore. Therefore it is always recommended to use a capacitor within the specified min and max limits. Refer application note AN43593 for more details on V_{CAP} options.
10. These parameters are guaranteed by design and are not tested.

AC Test Loads

Figure 3. AC Test Loads

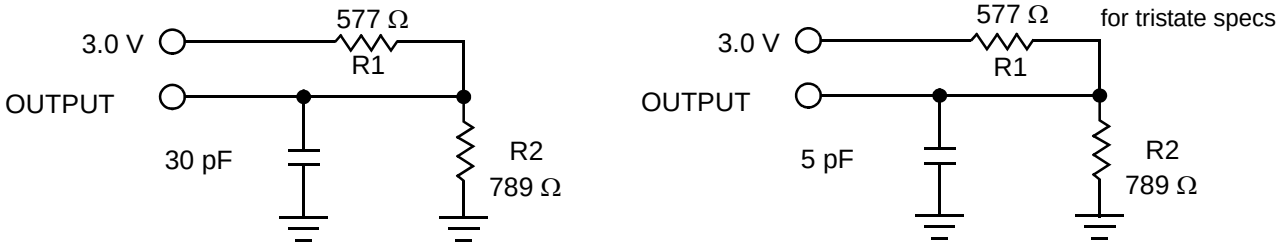

AC Test Conditions

Input pulse levels ..... 0 V to 3 V
Input rise and fall times (10%–90%) ..... ≤ 3 ns
Input and output timing reference levels ..... 1.5 V

AC Switching Characteristics

Over the Operating Range

Parameters [11]		Description	45 ns		Unit
Cypress Parameter	Alt Parameter		Min	Max	
SRAM Read Cycle					
t_{ACE}	t_{ACS}	Chip enable access time	–	45	ns
t_{RC}[12]	t_{RC}	Read cycle time	45	–	ns
t_{AA}[13]	t_{AA}	Address access time	–	45	ns
t_{DOE}	t_{OE}	Output enable to data valid	–	20	ns
t_{OHA}[13]	t_{OH}	Output hold after address change	3	–	ns
t_{LZCE}[14, 15]	t_{LZ}	Chip enable to output active	3	–	ns
t_{HZCE}[14, 15]	t_{HZ}	Chip disable to output inactive	–	15	ns
t_{LZOE}[14, 15]	t_{OLZ}	Output enable to output active	0	–	ns
t_{HZOE}[14, 15]	t_{OHZ}	Output disable to output inactive	–	15	ns
t_{PU}[14]	t_{PA}	Chip enable to power active	0	–	ns
t_{PD}[14]	t_{PS}	Chip disable to power standby	–	45	ns
SRAM Write Cycle					
t_{WC}	t_{WC}	Write cycle time	45	–	ns
t_{PWE}	t_{WP}	Write pulse width	30	–	ns
t_{SCE}	t_{CW}	Chip enable to end of write	30	–	ns
t_{SD}	t_{DW}	Data setup to end of write	15	–	ns
t_{HD}	t_{DH}	Data hold after end of write	0	–	ns
t_{AW}	t_{AW}	Address setup to end of write	30	–	ns
t_{SA}	t_{AS}	Address setup to start of write	0	–	ns
t_{HA}	t_{WR}	Address hold after end of write	0	–	ns
t_{HZWE}[14, 15, 16]	t_{WZ}	Write enable to output disable	–	15	ns
t_{LZWE}[14, 15]	t_{OW}	Output active after end of write	3	–	ns

Switching Waveforms

Figure 4. SRAM Read Cycle #1 (Address Controlled) [12, 13, 17]

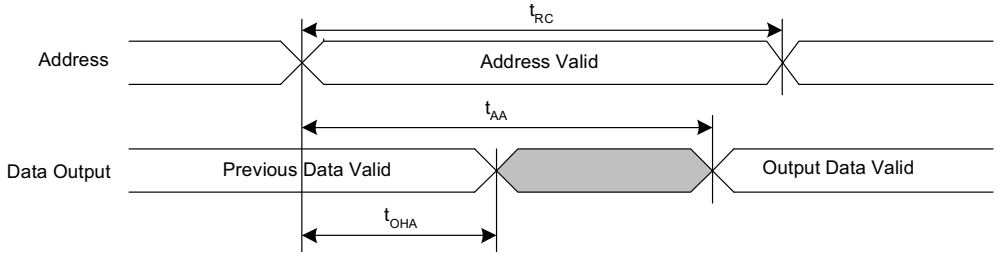

Notes

11. Test conditions assume signal transition time of 3 ns or less, timing reference levels of $V_{CC}/2$, input pulse levels of 0 to $V_{CC(typ)}$, and output loading of the specified I_{OL}/I_{OH} and load capacitance shown in Figure 3 on page 10.
12. WE must be HIGH during SRAM read cycles.
13. Device is continuously selected with CE and OE LOW.
14. These parameters are guaranteed by design but not tested.
15. Measured ±200 mV from steady state output voltage.
16. If WE is LOW when CE goes LOW, the outputs remain in the high impedance state.
17. HSB must remain HIGH during read and write cycles.

Switching Waveforms (continued)

Figure 5. SRAM Read Cycle #2 ($\overline{CE}$ and $\overline{OE}$ Controlled) [18, 19]

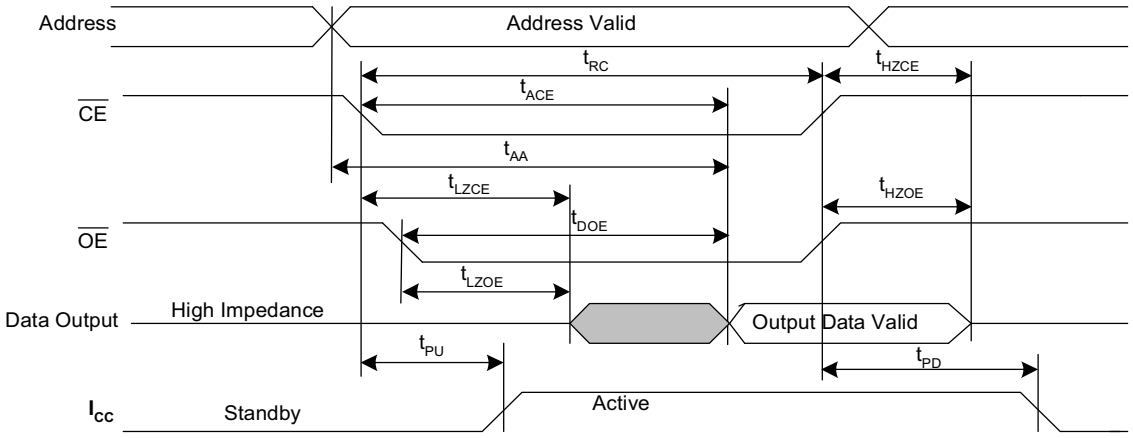

Figure 6. SRAM Write Cycle #1 ($\overline{WE}$ Controlled) [19, 20, 21]

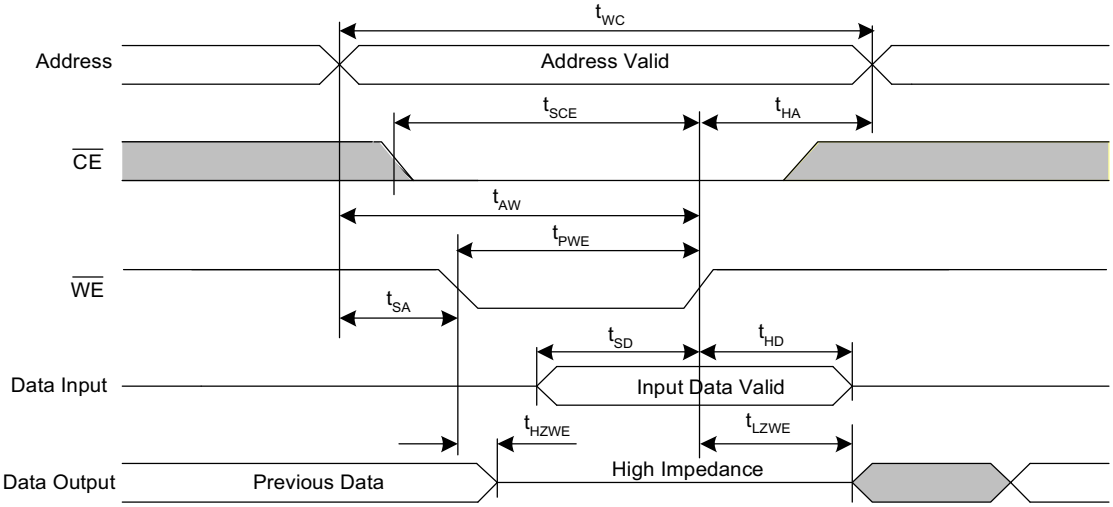

Figure 7. SRAM Write Cycle #2 (CE Controlled) [19, 20, 21]

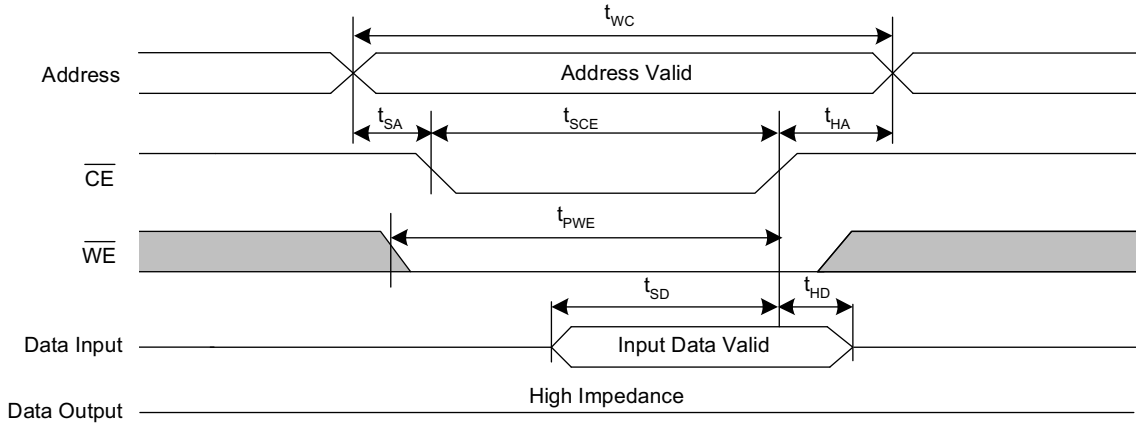

Notes
18. $\overline{WE}$ must be HIGH during SRAM read cycles.
19. $\overline{HSB}$ must remain HIGH during read and write cycles.
20. If $\overline{WE}$ is LOW when $\overline{CE}$ goes LOW, the outputs remain in the high impedance state.
21. $\overline{CE}$ or $\overline{WE}$ must be $\geq V_{IH}$ during address transitions.

AutoStore/Power-Up RECALL

Over the Operating Range

Parameter	Description	45 ns		Unit
		Min	Max	
$t_{HRECALL}$ [22]	Power-Up RECALL duration	–	20	ms
t_{STORE} [23]	STORE cycle duration	–	8	ms
t_{DELAY} [24]	Time allowed to complete SRAM write cycle	–	25	ns
V_{SWITCH}	Low voltage trigger level	–	2.65	V
$t_{VCCRISE}$ [25]	V_{CC} rise time	150	–	µs
V_{HDIS} [25]	$\overline{HSB}$ output disable voltage	–	1.9	V
t_{LZHSB} [25]	$\overline{HSB}$ to output active time	–	5	µs
t_{HHHD} [25]	$\overline{HSB}$ high active time	–	500	ns

Switching Waveforms – AutoStore/Power-up RECALL

Figure 8. AutoStore or Power-Up RECALL [26]

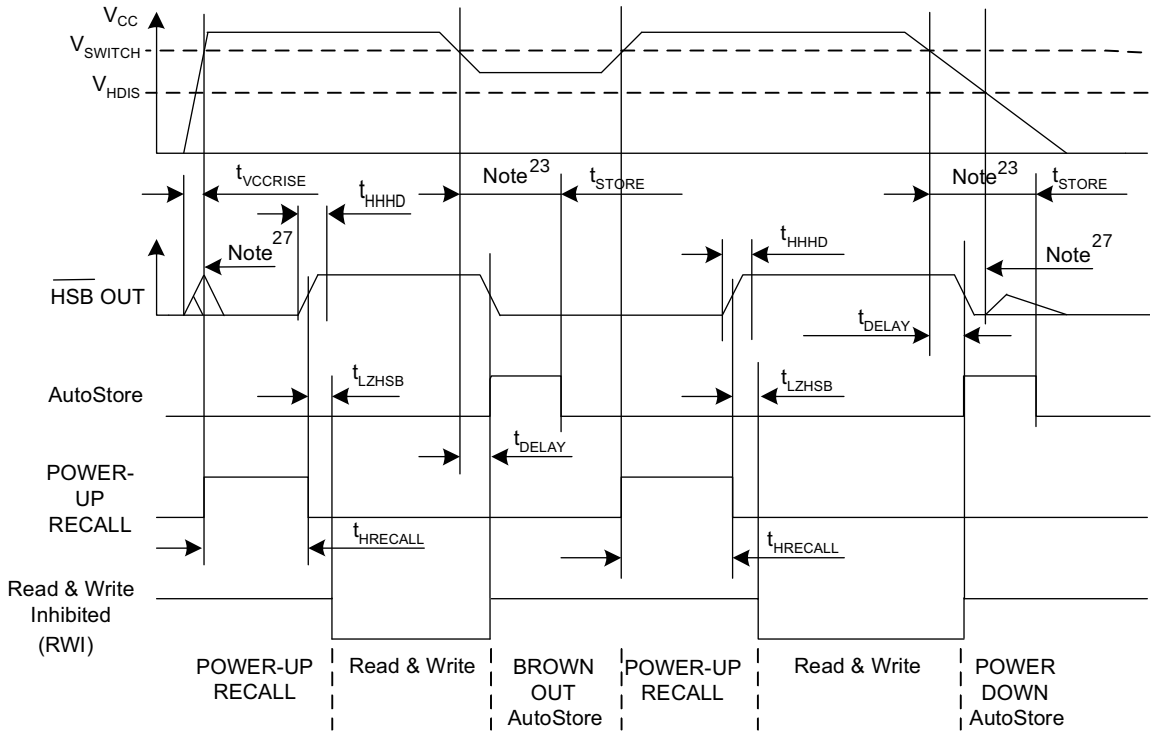

Notes
22. $t_{HRECALL}$ starts from the time V_{CC} rises above V_{SWITCH}.
23. If an SRAM write has not taken place since the last non-volatile cycle, no AutoStore or Hardware STORE takes place.
24. On a Hardware STORE and AutoStore initiation, SRAM write operation continues to be enabled for time t_{DELAY}.
25. These parameters are guaranteed by design but not tested.
26. Read and write cycles are ignored during STORE, RECALL, and while V_{CC} is below V_{SWITCH}.
27. During power-up and power-down, $\overline{HSB}$ glitches when $\overline{HSB}$ pin is pulled up through an external resistor.

Software Controlled STORE/RECALL Cycle

Over the Operating Range

Parameter [28, 29]	Description	45 ns		Unit
		Min	Max	
t_{RC}	STORE/RECALL initiation cycle time	45	–	ns
t_{SA}	Address setup time	0	–	ns
t_{CW}	Clock pulse width	30	–	ns
t_{HA}	Address hold time	0	–	ns
t_{RECALL}	RECALL duration	–	200	µs

Switching Waveforms – Software Controlled STORE/RECALL Cycle

Figure 9. $\overline{CE}$ and $\overline{OE}$ Controlled Software STORE/RECALL Cycle [29]

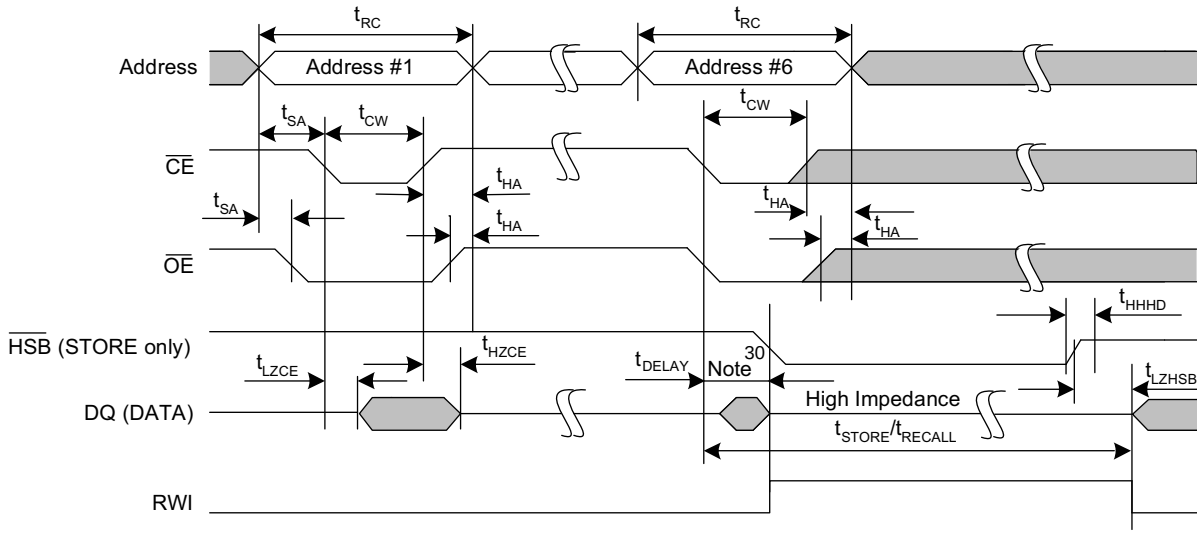

Figure 10. AutoStore Enable/Disable Cycle[29]

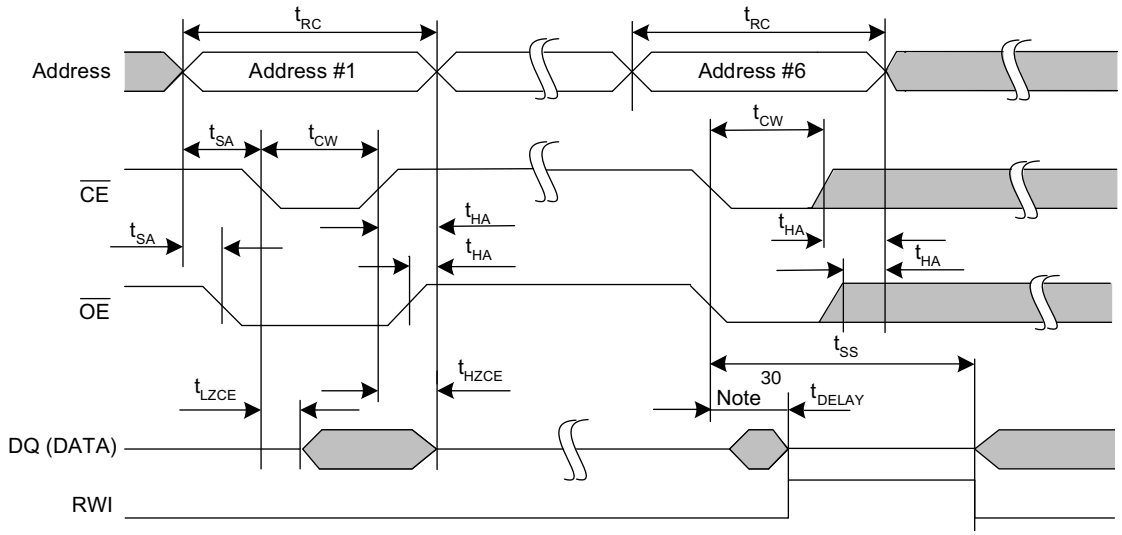

Notes
28. The software sequence is clocked with $\overline{CE}$ controlled or $\overline{OE}$ controlled reads.
29. The six consecutive addresses must be read in the order listed in Table 1 on page 6. $\overline{WE}$ must be HIGH during all six consecutive cycles.
30. DQ output data at the sixth read may be invalid since the output is disabled at t_{DELAY} time.

Hardware STORE Cycle

Over the Operating Range

Parameter	Description	45 ns		Unit
		Min	Max	
t_{DHSB}	$\overline{HSB}$ to output active time when write latch not set	–	25	ns
t_{PHSB}	Hardware STORE pulse width	15	–	ns
t_{SS} [31, 32]	Soft sequence processing time	–	100	µs

Switching Waveforms – Hardware STORE Cycle

Figure 11. Hardware STORE Cycle [33]

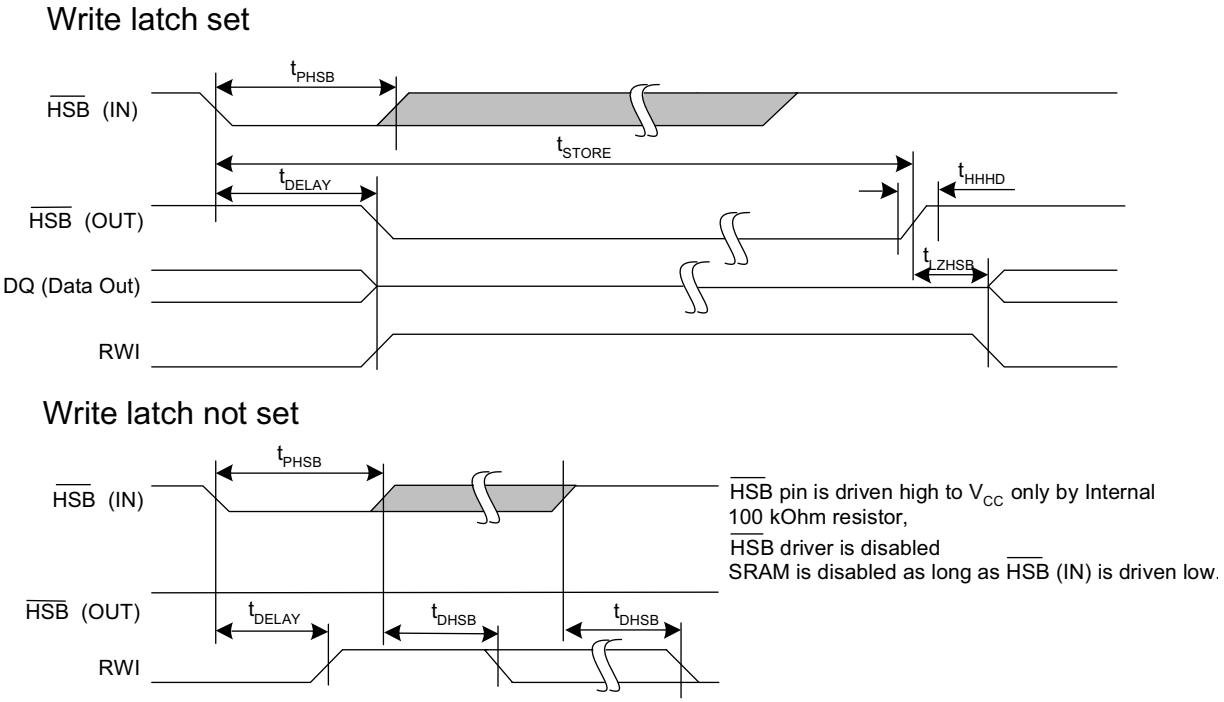

Figure 12. Soft Sequence Processing [31, 32]

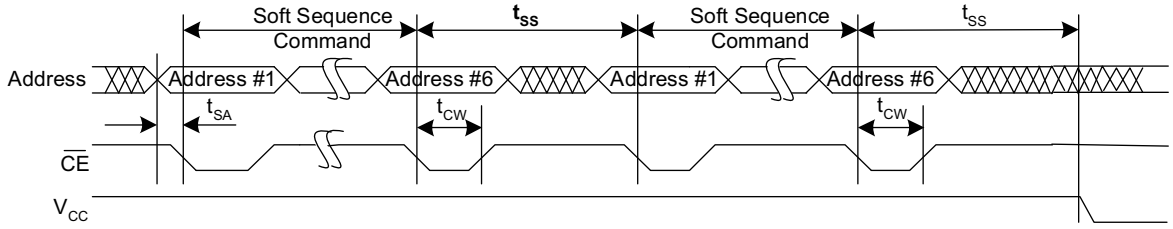

Notes
31. This is the amount of time it takes to take action on a soft sequence command. V_{CC} power must remain HIGH to effectively register command.
32. Commands such as STORE and RECALL lock out I/O until operation is complete which further increases this time. See the specific command.
33. If an SRAM write has not taken place since the last non-volatile cycle, no AutoStore or Hardware STORE takes place.

Truth Table For SRAM Operations

$\overline{HSB}$ should remain HIGH for SRAM Operations.

Table 2. Truth Table

$\overline{CE}$	$\overline{WE}$	$\overline{OE}$	Inputs/Outputs	Mode	Power
H	X	X	High Z	Deselect/Power-down	Standby
L	H	L	Data out (DQ_0–DQ_7);	Read	Active
L	H	H	High Z	Output disabled	Active
L	L	X	Data in (DQ_0–DQ_7);	Write	Active

Ordering Information

Speed (ns)	Ordering Code	Package Diagram	Package Type	Operating Range
45	CG7501AA	51-85128	48-ball FBGA (Bulk)	Industrial
	CG7501AAT		48-ball FBGA (Tape and reel)	

Ordering Code Definitions

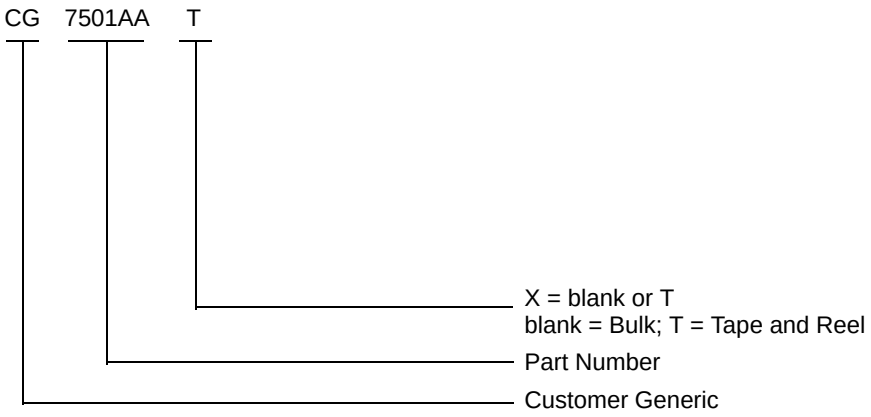

Package Diagrams

Figure 13. 48-ball FBGA (6 × 10 × 1.2 mm) Package Outline, 51-85128

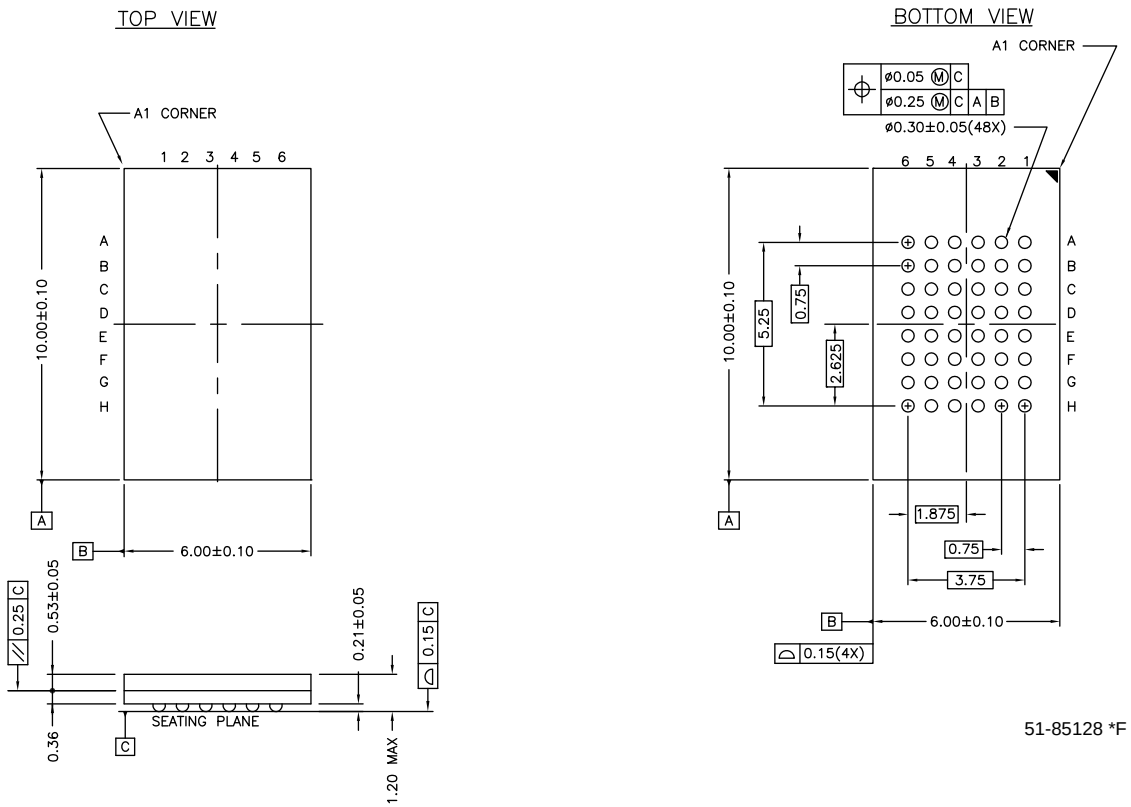

Acronyms

Acronym	Description
$\overline{CE}$	chip enable
CMOS	complementary metal oxide semiconductor
EIA	electronic industries alliance
FBGA	fine-pitch ball grid array
$\overline{HSB}$	hardware store busy
I/O	input/output
nvSRAM	non-volatile static random access memory
$\overline{OE}$	output enable
RoHS	restriction of hazardous substances
RWI	read and write inhibited
SRAM	static random access memory
$\overline{WE}$	write enable

Document Conventions

Units of Measure

Symbol	Unit of Measure
°C	degree Celsius
Hz	hertz
kHz	kilohertz
kΩ	kilo-ohm
MHz	megahertz
µA	microampere
µF	microfarad
µs	microsecond
mA	milliampere
ms	millisecond
ns	nanosecond
Ω	ohm
%	percent
pF	picofarad
sec	second
V	volt
W	watt

Document History Page

Document Title: CG7501AA, 4-Mbit (512 K × 8) nvSRAM Document Number: 001-82292				
Revision	**ECN**	**Orig. of Change**	**Submission Date**	**Description of Change**
**	3734310	GVCH	09/05/2012	New datasheet.

Sales, Solutions, and Legal Information

Worldwide Sales and Design Support

Cypress maintains a worldwide network of offices, solution centers, manufacturer's representatives, and distributors. To find the office closest to you, visit us at Cypress Locations.

Products

Automotive	cypress.com/go/automotive
Clocks & Buffers	cypress.com/go/clocks
Interface	cypress.com/go/interface
Lighting & Power Control	cypress.com/go/powerpsoc cypress.com/go/plc
Memory	cypress.com/go/memory
Optical & Image Sensing	cypress.com/go/image
PSoC	cypress.com/go/psoc
Touch Sensing	cypress.com/go/touch
USB Controllers	cypress.com/go/USB
Wireless/RF	cypress.com/go/wireless

PSoC Solutions

psoc.cypress.com/solutions

PSoC 1 | PSoC 3 | PSoC 5

© Cypress Semiconductor Corporation, 2012. The information contained herein is subject to change without notice. Cypress Semiconductor Corporation assumes no responsibility for the use of any circuitry other than circuitry embodied in a Cypress product. Nor does it convey or imply any license under patent or other rights. Cypress products are not warranted nor intended to be used for medical, life support, life saving, critical control or safety applications, unless pursuant to an express written agreement with Cypress. Furthermore, Cypress does not authorize its products for use as critical components in life-support systems where a malfunction or failure may reasonably be expected to result in significant injury to the user. The inclusion of Cypress products in life-support systems application implies that the manufacturer assumes all risk of such use and in doing so indemnifies Cypress against all charges.

Any Source Code (software and/or firmware) is owned by Cypress Semiconductor Corporation (Cypress) and is protected by and subject to worldwide patent protection (United States and foreign), United States copyright laws and international treaty provisions. Cypress hereby grants to licensee a personal, non-exclusive, non-transferable license to copy, use, modify, create derivative works of, and compile the Cypress Source Code and derivative works for the sole purpose of creating custom software and or firmware in support of licensee product to be used only in conjunction with a Cypress integrated circuit as specified in the applicable agreement. Any reproduction, modification, translation, compilation, or representation of this Source Code except as specified above is prohibited without the express written permission of Cypress.

Disclaimer: CYPRESS MAKES NO WARRANTY OF ANY KIND, EXPRESS OR IMPLIED, WITH REGARD TO THIS MATERIAL, INCLUDING, BUT NOT LIMITED TO, THE IMPLIED WARRANTIES OF MERCHANTABILITY AND FITNESS FOR A PARTICULAR PURPOSE. Cypress reserves the right to make changes without further notice to the materials described herein. Cypress does not assume any liability arising out of the application or use of any product or circuit described herein. Cypress does not authorize its products for use as critical components in life-support systems where a malfunction or failure may reasonably be expected to result in significant injury to the user. The inclusion of Cypress' product in a life-support systems application implies that the manufacturer assumes all risk of such use and in doing so indemnifies Cypress against all charges.

Use may be limited by and subject to the applicable Cypress software license agreement.

All products and company names mentioned in this document may be the trademarks of their respective holders.