

MSC
Micro Second Channel

AURIX™ TC4xx Microcontroller

V1.0.0 2024-09

Please read the Important Notice and Warnings at the end of this document

MSC
Micro Second Channel

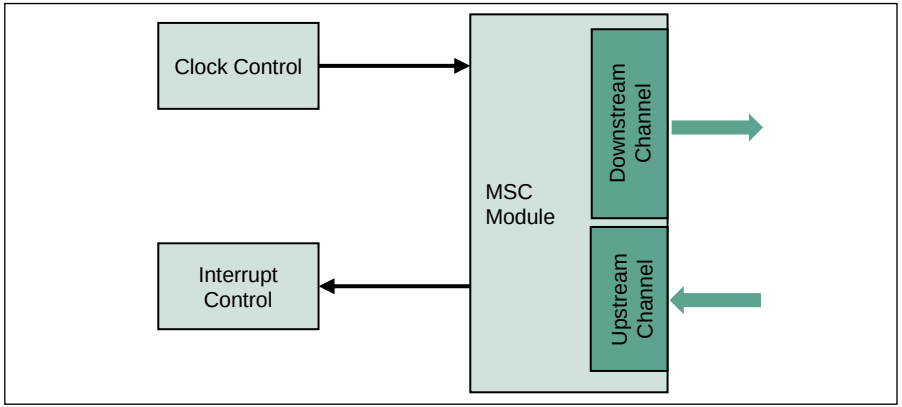

Highlights

- The Micro Second Channel (MSC) is a serial interface that is designed especially for connecting external power devices to AURIX™ TC4xx
- Parity Error Checker
- Spike filter on input line

Key Features

Downstream and upstream channels

Serial data transmission

Customer Benefits

- Efficient communication between AURIX™ and power devices
- Reduces the number of pins required for connecting external power devices

Copyright © Infineon Technologies AG 2024. All rights reserved.

MSC
Downstream and upstream channels

- The data is sent to the power device via the downstream channel (high speed synchronous serial data stream) and the status information is received on AURIX™ side via the upstream channel (low speed asynchronous serial data stream)
- Downstream channel:
  - Serial output clock frequency up to 80 MHz
  - Fractional clock divider for precise frequency control
  - Start of serial frame: software-controlled, timer-controlled or free-running
- Upstream channel:
  - Programmable upstream data frame length (16 or 12 bits)
  - Parity error checker
  - Built-in spike filter on SDI lines

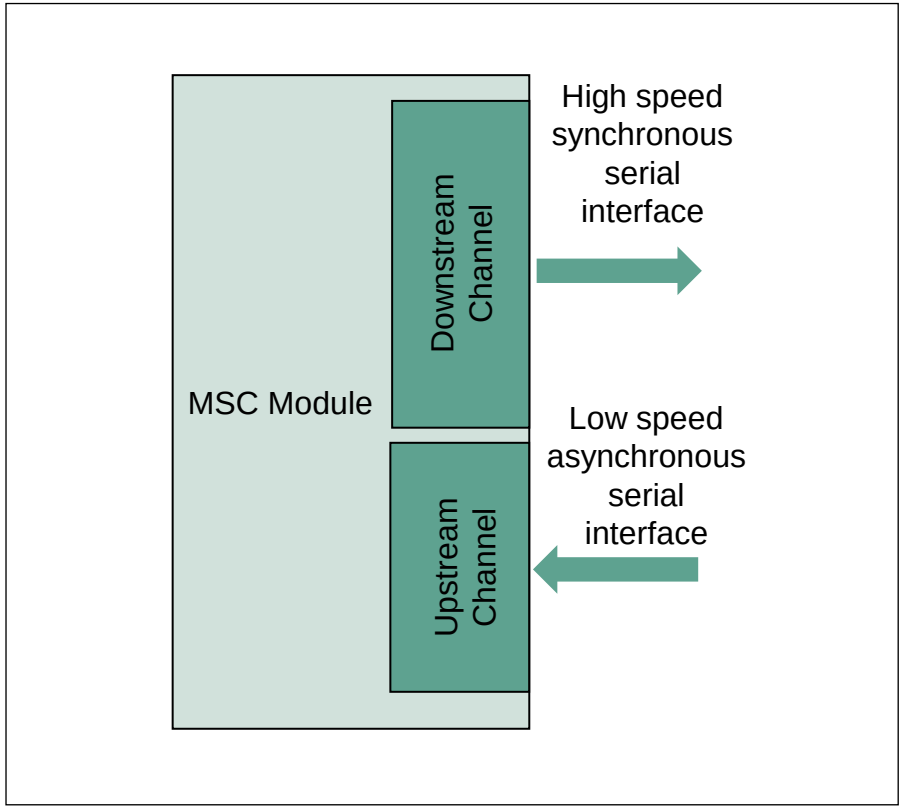

Copyright © Infineon Technologies AG 2024. All rights reserved.

MSC
Serial data transmission

- Serial data transmission:
  - Low-speed asynchronous reception
  - High-speed synchronous transmission
- Serial data transmission reduces the number of pins required for communication with external devices
- The pin types of the downstream channel interface are selectable:
  - Four LVDS differential output drivers
  - Four digital GPIO pins
- The downstream channel generates five output signals that control eight MSC module output (4 chip select outputs, 2 clock outputs, 2 serial data outputs)
- The upstream channel has one input signal

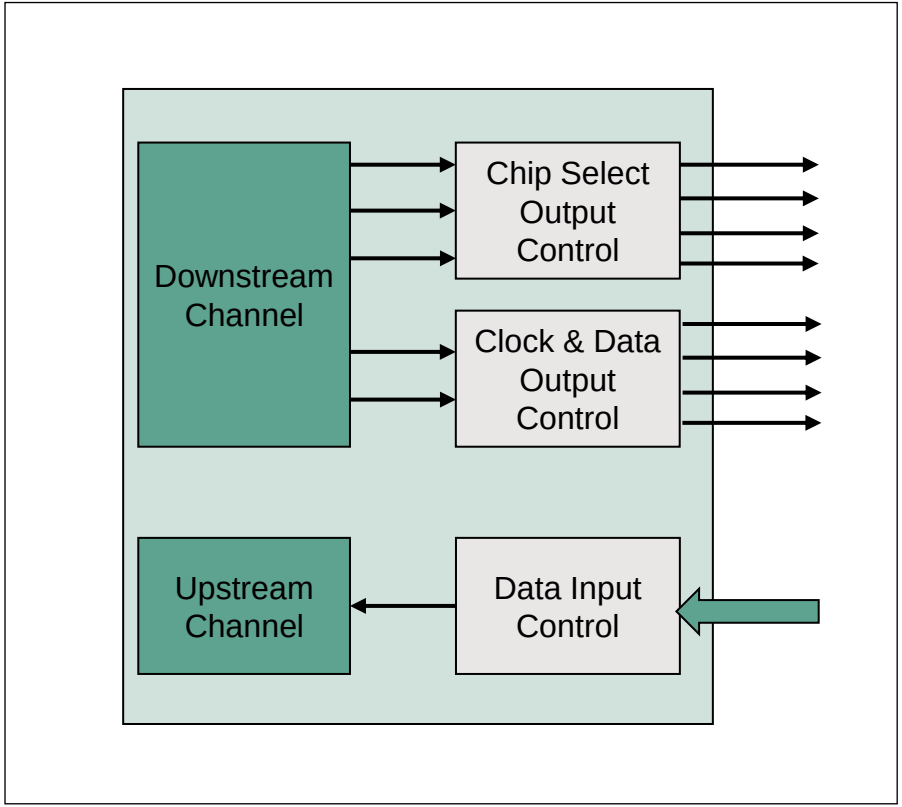

Copyright © Infineon Technologies AG 2024. All rights reserved.

MSC
System integration

- As in the case of most of the AURIX modules, MSC is connected on the System Peripheral Bus (SPB)
- Parallel requests from on chip bus masters to MSC module are executed sequentially via the on chip bus system
- Read-modify-write feature provides an atomic read/write sequence, which ensures that no other master can access the module in between

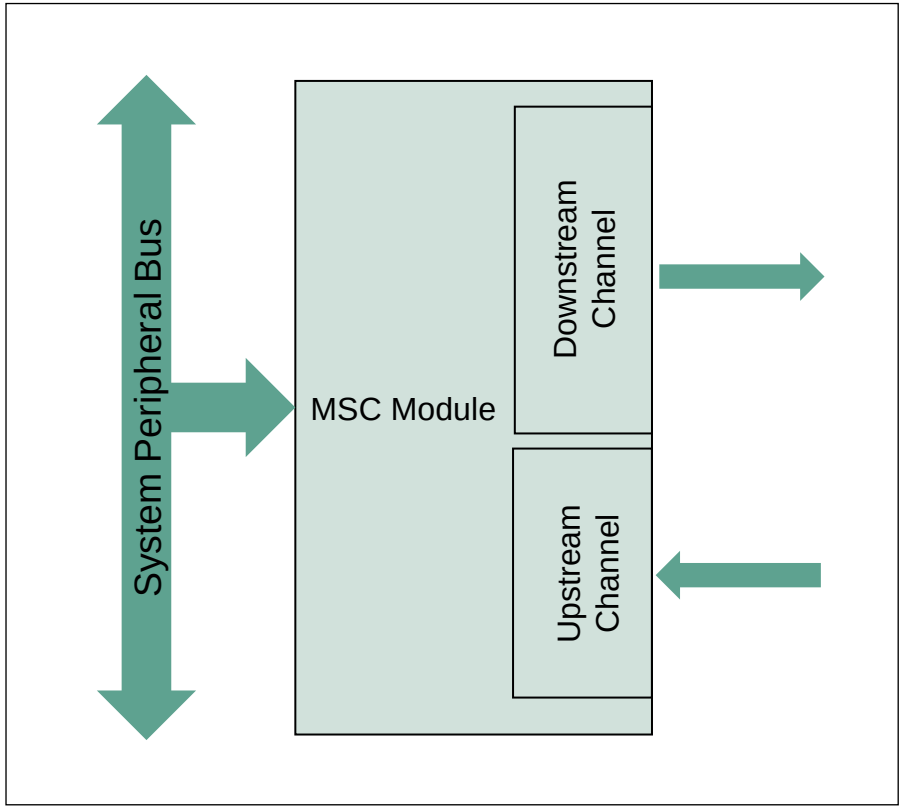

Copyright © Infineon Technologies AG 2024. All rights reserved.

Application example
Control of an external power switching unit

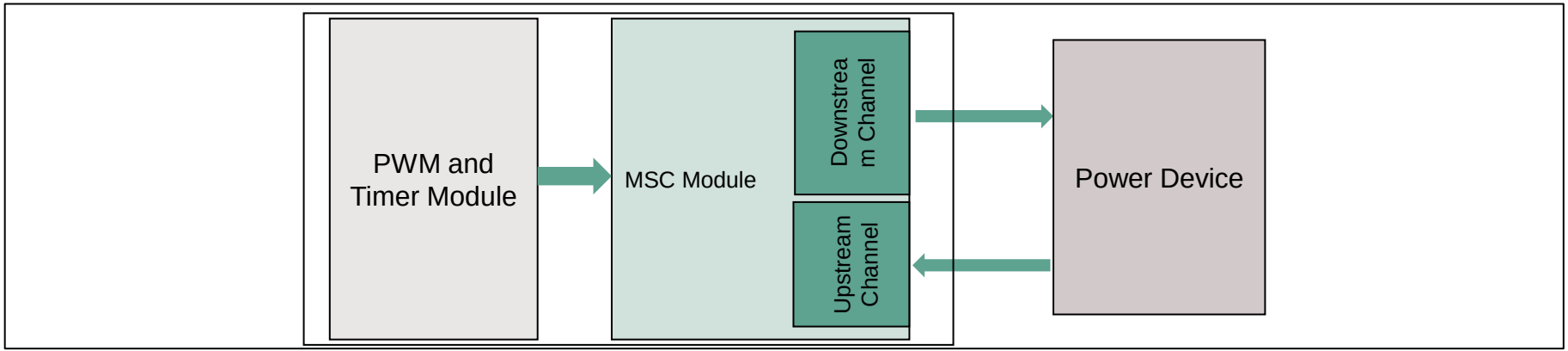

Overview

› The MSC module supports two MSC slaves. Each interface can send command and data frames to the power device

Advantages

› Downstream channel can be used to send information to the power device. Data frames can be sent out in repetition mode with one passive frame in between, reducing the number of pins and the CPU overhead

Copyright © Infineon Technologies AG 2024. All rights reserved.

Trademarks

All referenced product or service names and trademarks are the property of their respective owners.

Edition 2024-09
Published by
Infineon Technologies AG
81726 Munich, Germany

© 2024 Infineon Technologies AG.
All Rights Reserved.

Do you have a question about this document?
Email: erratum@infineon.com

Document reference
AURIX_3_Micro_Second_Channel

IMPORTANT NOTICE

The information given in this document shall in no event be regarded as a guarantee of conditions or characteristics ("Beschaffenheitsgarantie") .

With respect to any examples, hints or any typical values stated herein and/or any information regarding the application of the product, Infineon Technologies hereby disclaims any and all warranties and liabilities of any kind, including without limitation warranties of non-infringement of intellectual property rights of any third party.

In addition, any information given in this document is subject to customer's compliance with its obligations stated in this document and any applicable legal requirements, norms and standards concerning customer's products and any use of the product of Infineon Technologies in customer's applications.

The data contained in this document is exclusively intended for technically trained staff. It is the responsibility of customer's technical departments to evaluate the suitability of the product for the intended application and the completeness of the product information given in this document with respect to such application.

For further information on the product, technology, delivery terms and conditions and prices please contact your nearest Infineon Technologies office (www.infineon.com).

WARNINGS

Due to technical requirements products may contain dangerous substances. For information on the types in question please contact your nearest Infineon Technologies office.

Except as otherwise explicitly approved by Infineon Technologies in a written document signed by authorized representatives of Infineon Technologies, Infineon Technologies' products may not be used in any applications where a failure of the product or any consequences of the use thereof can reasonably be expected to result in personal injury.

Copyright © Infineon Technologies AG 2024. All rights reserved.


Infineon