

LETH
Lite Ethernet

AURIX™ TC4xx Microcontroller

V1.0.0 2024-09

Please read the Important Notice and Warnings at the end of this document

LETH
Lite Ethernet

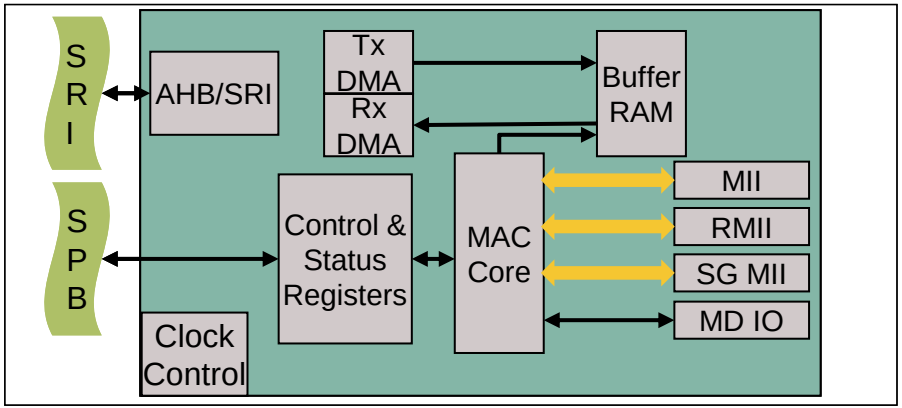

Highlights

› 10/100/1000 Mbps IEEE 802.3-2008 Ethernet MAC and MII, RMII and RGMII PHY interfaces
› IEEE 802.1Q: Virtual LAN (VLAN)
› IEEE 802.1Qav: Forwarding and Queuing Enhancements for Time-Sensitive Streams
› IEEE 802.1AS: Timing and Synchronization for Time-Sensitive
› IEEE 1588: Precision Time Protocol for precision networked clock synchronization

Key Features

Packet Filtering

CRC and Pad generation

Multiple DMA Channels and Queues

QoS Support

Customer Benefits

› Reducing the processor’s load

› Deterministic behavior for automotive applications

Copyright © Infineon Technologies AG 2024. All rights reserved.

LETH
Packet Filtering

- The main advantage is the unloading of the CPU SW Stacks by:
  - Pre-processing of data traffic in HW (no SW load)
  - Three levels of filters:
    - MAC addresses
    - VLAN Tags and PCP
    - Ethernet protocols AVB, PTP, TCP/UDP/IP Unicast and Multicast
    - Bridging function

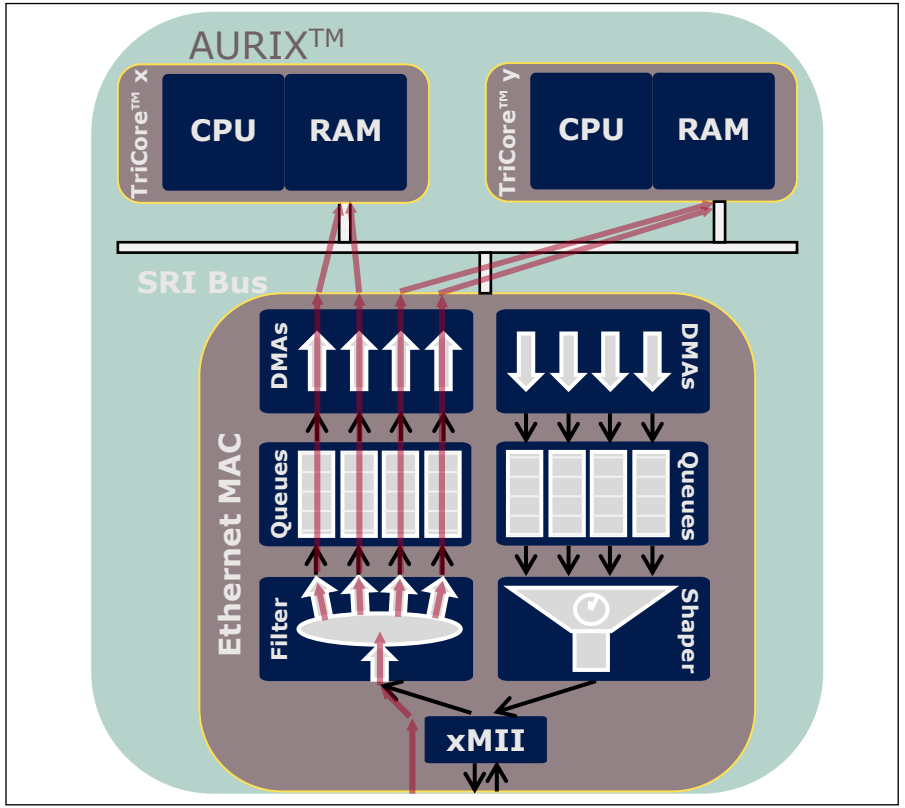

Copyright © Infineon Technologies AG 2024. All rights reserved.

› CRC and Pad generation for Transmission frame
  – When the number of bytes received falls **below 64 bytes**, the **state machine** automatically appends zeros to the Tx frame to make the **data length exactly 46 bytes** (if no VLAN is used) or **42 bytes** (if VLAN tag is used) .
  – The **Transmit CRC Generator** module calculate the CRC for the Frame Check Sequence (FCS) field before transmission to the TPE module.

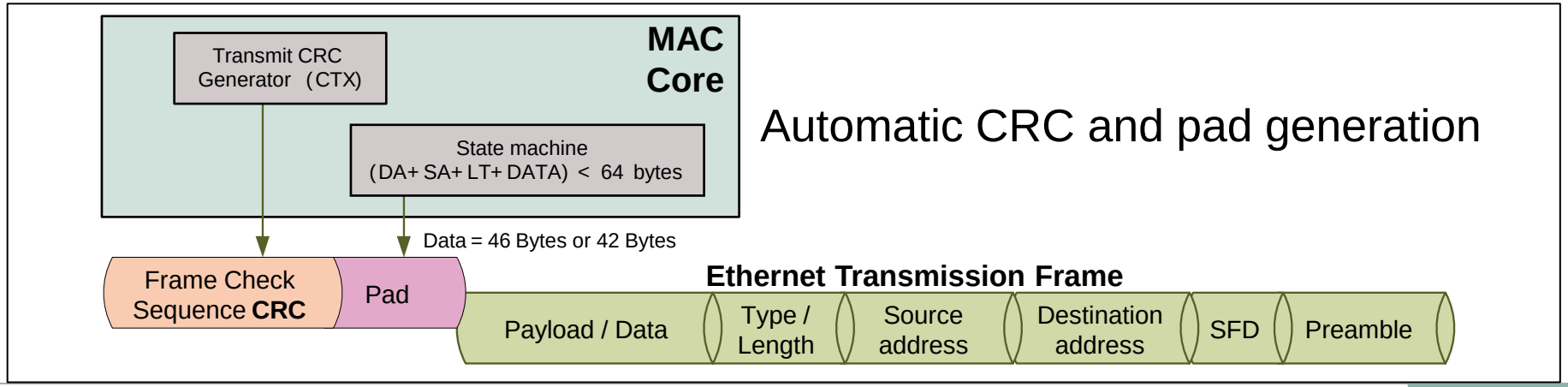

Copyright © Infineon Technologies AG 2024. All rights reserved.

LETH
Multiple DMA Channels and Queues

- Data traffic separated into 4 queues:
  - Up to 4 Tx queues sharing 16 KB FIFO
  - Up to 4 Rx queues sharing 8 KB FIFO
- Each queue can be connected to any CPU
- Time Stamp Unit for IEEE 802.1AS:
  - HW unit for IEEE 802.1AS (PTP)
  - Required for clock synchronization
  - Supports master and slave mode
  - Supports 1-step time stamp
- All these features ensure a deterministic behavior of the Ethernet traffic

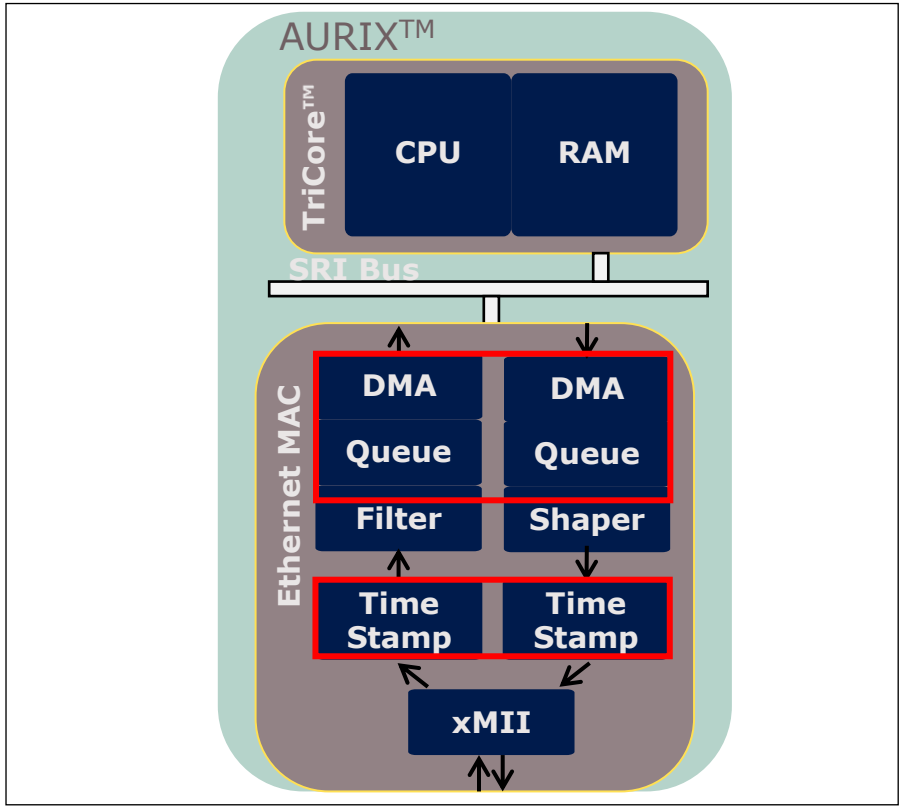

Copyright © Infineon Technologies AG 2024. All rights reserved.

LETH
QoS Support

- Shapers for QoS support
  - 4 Credit Based Shaper
    - IEEE 802.1Q compatible
  - 4 Time Based Shapers
    - For time triggered deterministic traffic
  - Each queue provides both shapers
  - Each shaper can be enabled / disabled individually

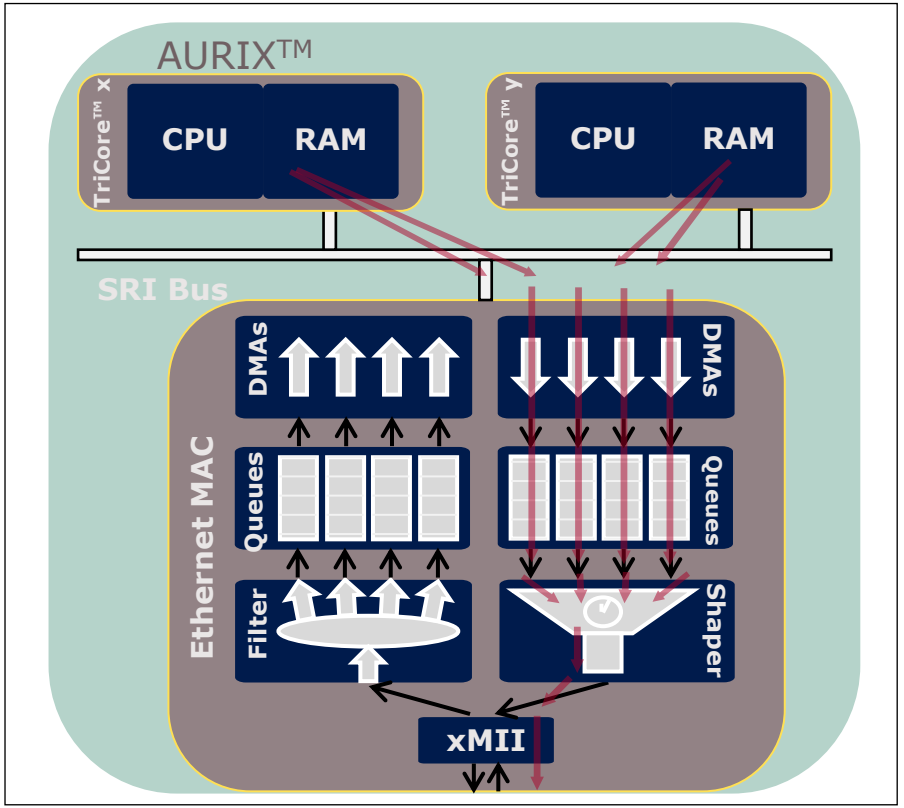

Copyright © Infineon Technologies AG 2024. All rights reserved.

LETH
System integration

The Lite Ethernet MAC can make use of the internal Flash/RAM for data storage and handling. The internal RAM is used as well for DMA Transmit / Receive descriptors and Ethernet Frame storage. The Interrupt Router handles all requests coming via Ethernet, for example, a received frame notification. Combined with the automotive AUTOSAR™ software new Applications can be developed. Faster ECU Firmware updates, Service oriented communication via SOME/IP or Service and diagnosis via DoIP are just some examples.

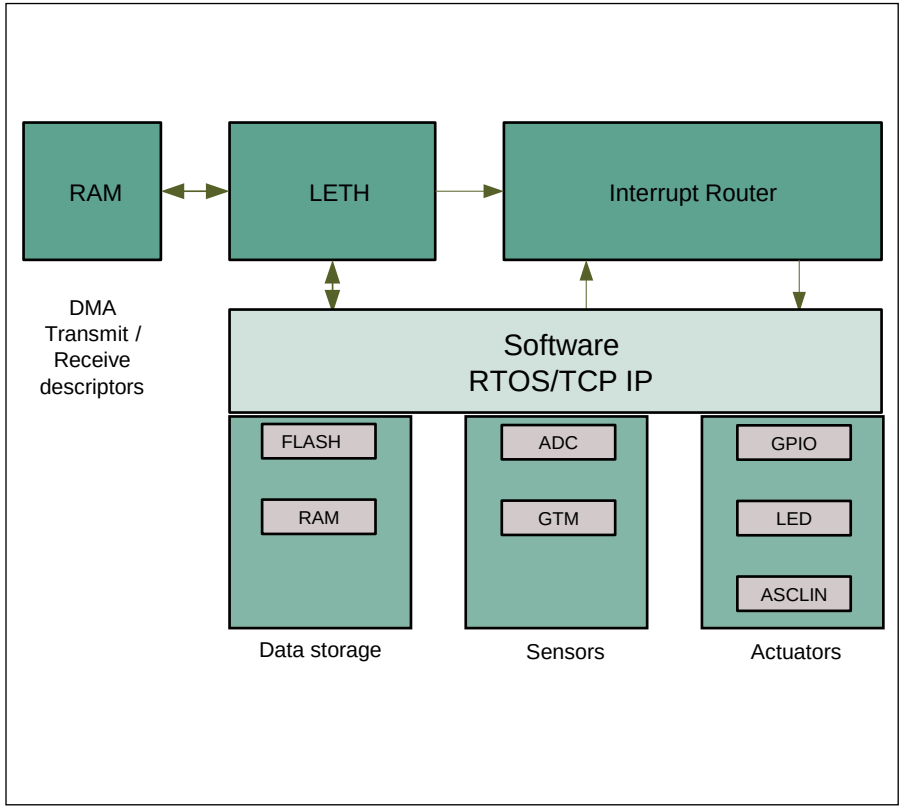

Copyright © Infineon Technologies AG 2024. All rights reserved.

Application example
Firmware updates of multiple ECUs

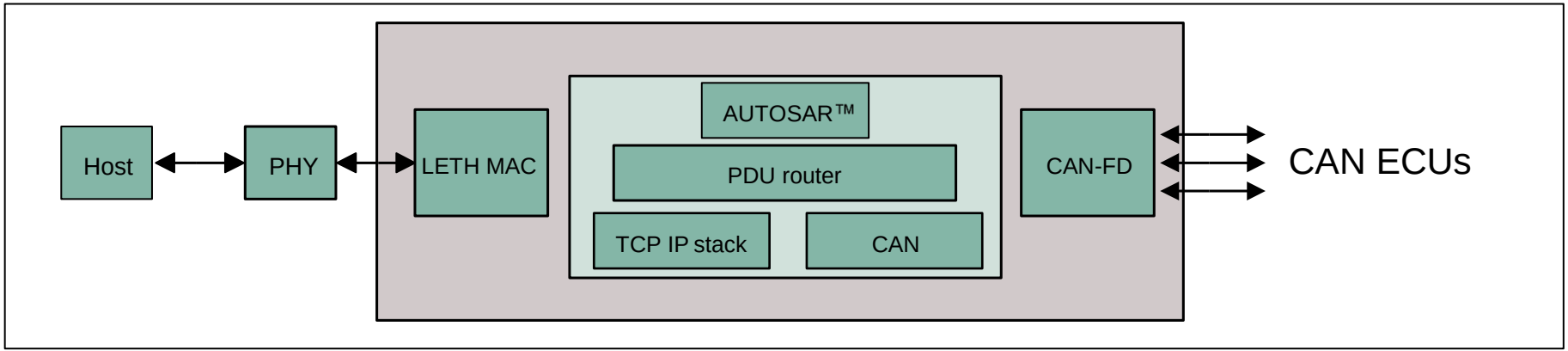

Overview

› Firmware updates in cars can make use of Ethernet to exchange data much faster compared to other existing communication interfaces

Advantages

› The Lite Ethernet MAC allows with the high-speed data transfer to update multiple ECUs in parallel in a car
› The faster update time saves money at line end programming and in field garage firmware updates

Copyright © Infineon Technologies AG 2024. All rights reserved.

Trademarks

All referenced product or service names and trademarks are the property of their respective owners.

Edition 2024-09
Published by
Infineon Technologies AG
81726 Munich, Germany

© 2024 Infineon Technologies AG.
All Rights Reserved.

Do you have a question about this document?
Email: erratum@infineon.com

Document reference
AURIX_3_Lite_Ethernet

IMPORTANT NOTICE

The information given in this document shall in no event be regarded as a guarantee of conditions or characteristics ("Beschaffenheitsgarantie") .

With respect to any examples, hints or any typical values stated herein and/or any information regarding the application of the product, Infineon Technologies hereby disclaims any and all warranties and liabilities of any kind, including without limitation warranties of non-infringement of intellectual property rights of any third party.

In addition, any information given in this document is subject to customer's compliance with its obligations stated in this document and any applicable legal requirements, norms and standards concerning customer's products and any use of the product of Infineon Technologies in customer's applications.

The data contained in this document is exclusively intended for technically trained staff. It is the responsibility of customer's technical departments to evaluate the suitability of the product for the intended application and the completeness of the product information given in this document with respect to such application.

For further information on the product, technology, delivery terms and conditions and prices please contact your nearest Infineon Technologies office (www.infineon.com).

WARNINGS

Due to technical requirements products may contain dangerous substances. For information on the types in question please contact your nearest Infineon Technologies office.

Except as otherwise explicitly approved by Infineon Technologies in a written document signed by authorized representatives of Infineon Technologies, Infineon Technologies' products may not be used in any applications where a failure of the product or any consequences of the use thereof can reasonably be expected to result in personal injury.

Copyright © Infineon Technologies AG 2024. All rights reserved.


Infineon