

HSSL
High Speed Serial Link

AURIX™ TC4xx Microcontroller

V1.0.0 2024-09

Please read the Important Notice and Warnings at the end of this document

HSSL
High speed serial sink

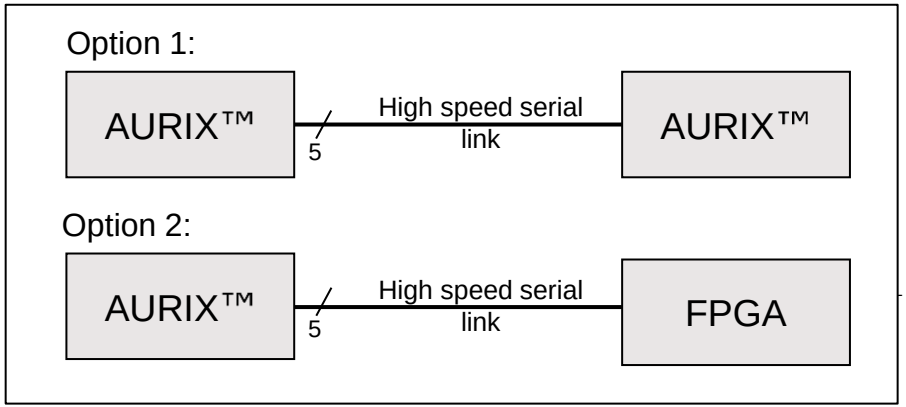

Highlights

- High speed communication with up to 320 MBaud between two AURIX™ devices
- Two HSSL instances on some derivatives (e.g. parallel communication, double bandwidth) Protocol supported by FPGAs
- Low pin count (2 x 2 LVDS, 1 x clock)
- Triggering of interrupts from remote

Key Features

Act as internal bus master interface

Streaming supported by direct memory access

Access windows for protection and security

Customer Benefits

- Direct access to all registers and memories on remote device. Remote CPU not involved
- Off load CPUs on both devices even for high data bandwidth and short latency use cases
- Avoids possible security impact of powerful communication options given by this module

Copyright © Infineon Technologies AG 2024. All rights reserved.

HSSL
Act as internal bus master interface

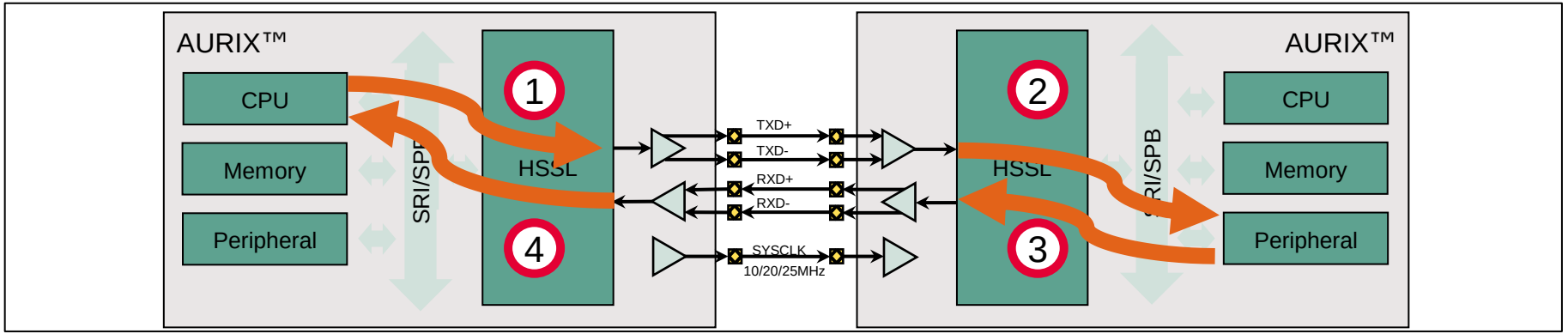

- Typically, CPUx can access local memories and peripheral registers by its master bus interface on the internal local bus
- With HSSL, CPUx can also access remote memories and peripheral registers. For this purpose, on the remote device HSSL module is acting as a bus master – same as the local CPUs can do
- Remote CPUx are not involved in this process
- All accesses to remote peripherals and memories are based on simple and lightweight register accesses to the local HSSL module
- Available protocol frames for this purpose are: 8/16/32bit READ, 8/16/32bit WRITE
- All frames are end-to-end protected by CRC
  - **HSSL makes device boundaries become meaningless and enables you, to focus the combined processing power of the interconnected devices (CPUs and peripherals) for one mission**

Copyright © Infineon Technologies AG 2024. All rights reserved.

HSSL
Streaming supported by direct memory access

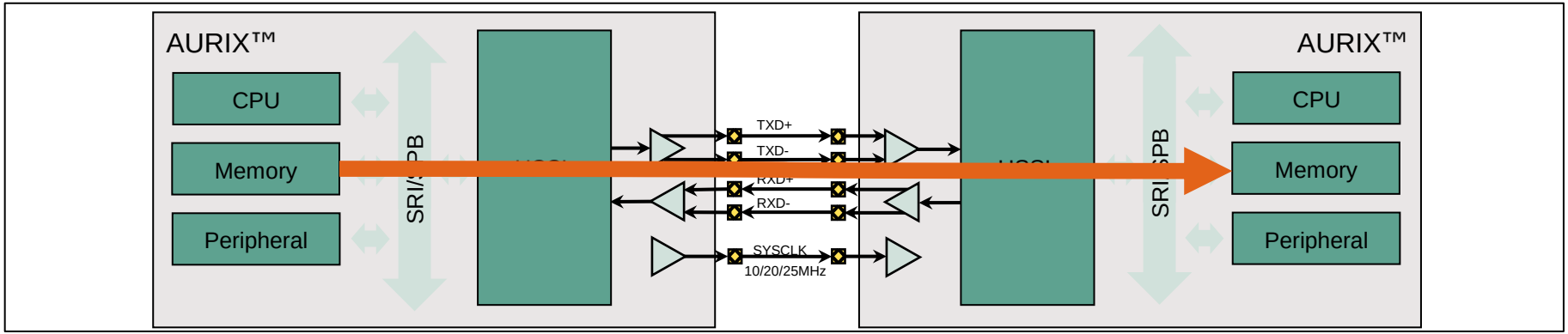

- HSSL has an integrated DMA to autonomously execute data streaming from any memory location of the local device to any memory location on the remote device
- Easy and lightweight streaming setup by CPUx providing source address, destination address and amount of data
- Any CPU can setup streaming also from remote by using HSSL 32bit READ/WRITE accesses
- Support of continuous streaming including double buffering. Once continuous streaming is started, no further CPU interaction is needed to keep streaming alive
- All streaming frames are end-to-end protected by CRC32
  - **High data throughput of up to 84% net bandwidth of 320MBaud uni-directional and 62% net bandwidth bi-directional**

Copyright © Infineon Technologies AG 2024. All rights reserved.

HSSL
Access windows for protection and security

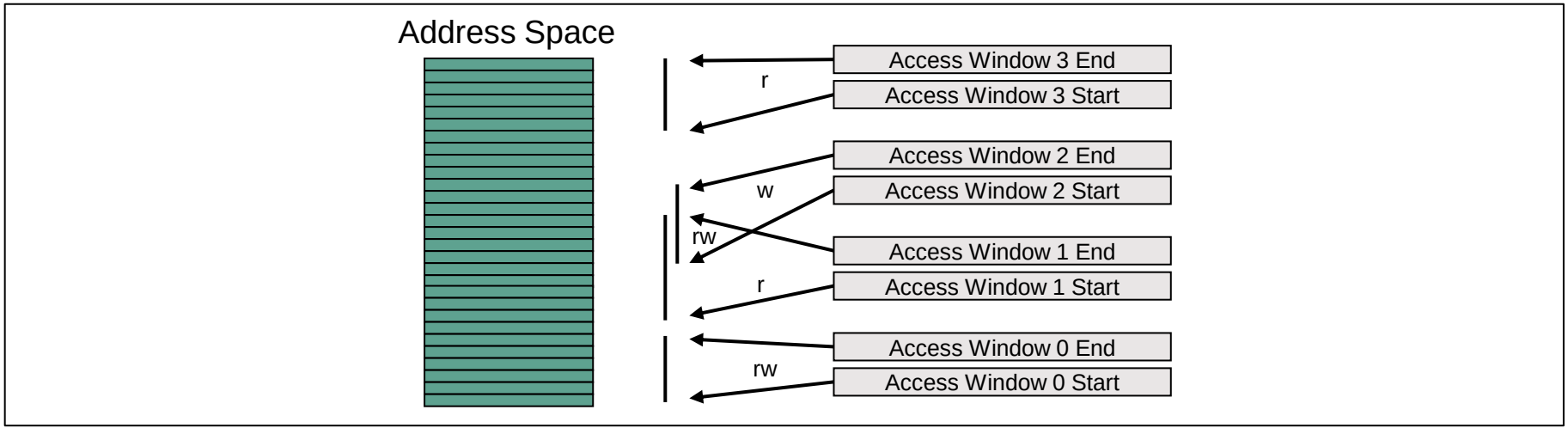

- HSSL allows remote devices to access the entire address and register space of the local device. Depending on the application, this could result in security risks. To eliminate these risks, access windows are implemented inside hardware
- Four independent access windows can be defined granting RW, W or R access. Every read/write request not passing any of the access windows is rejected by hardware
- After reset, by default, the complete address space is protected for read and write
- The registers to setup access windows are at any time protected from being accessed from remote
  - **Device is at any time in full control which registers or memory can be accessed from remote**

Copyright © Infineon Technologies AG 2024. All rights reserved.

HSSL
System integration

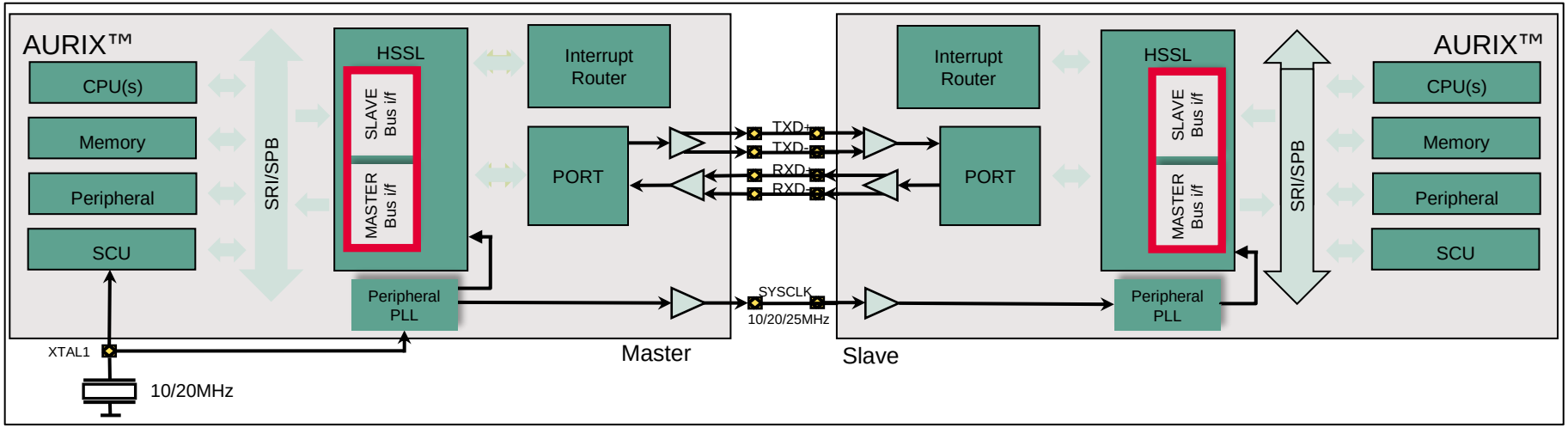

- HSSL has slave and master access on the internal bus
- **Slave interface is used** by bus masters (like CPU or HSSL module itself) to access the HSSL registers for configuration and to initiate communication transactions
- **Master interface is used** by the HSSL module to
    1. read/write memories and registers during execution of transactions
    2. read pre-programmed linked linked lists (e.g. prepared by CPUx) from memory to execute autonomously a sequence of transactions

Copyright © Infineon Technologies AG 2024. All rights reserved.

HSSL
System integration

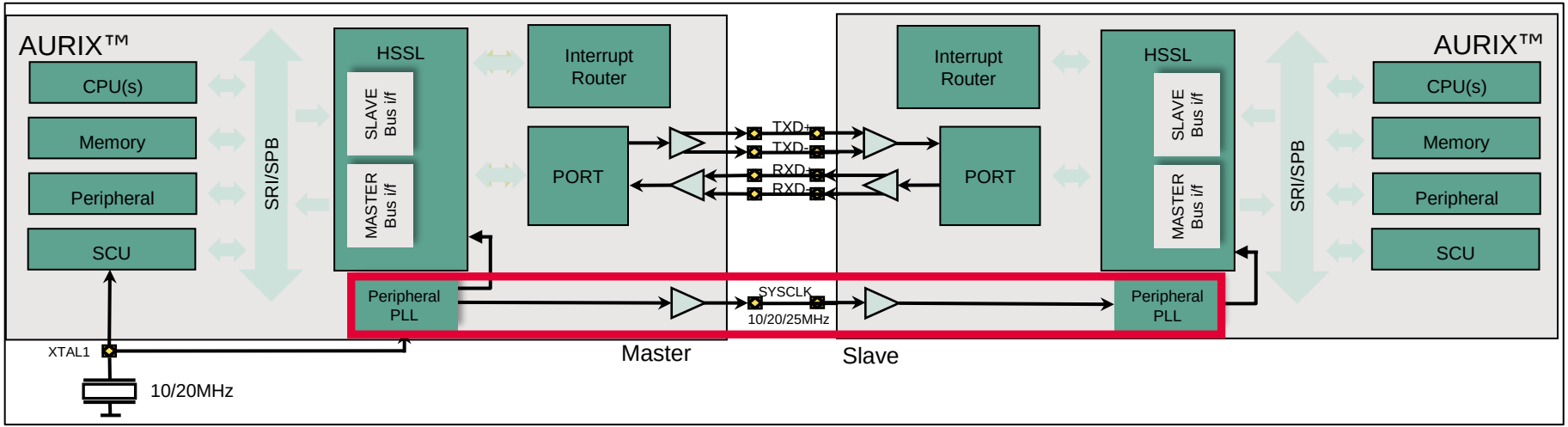

- On physical layer, HSSL requires the Peripheral PLL to generate the 320MHz PHY clk. Typically on master device the input clock of the HSSL module is taken from the Peripheral PLL
- On physical layer the two interconnected devices have an asymmetric setup:
  Master device is providing its clock to the slave device for frequency matching
- On protocol layer the asymmetric master/slave setup of physical layer is not visible.
  Here both devices behave symmetric and all communication options are equally available to both devices

Copyright © Infineon Technologies AG 2024. All rights reserved.

HSSL
System integration

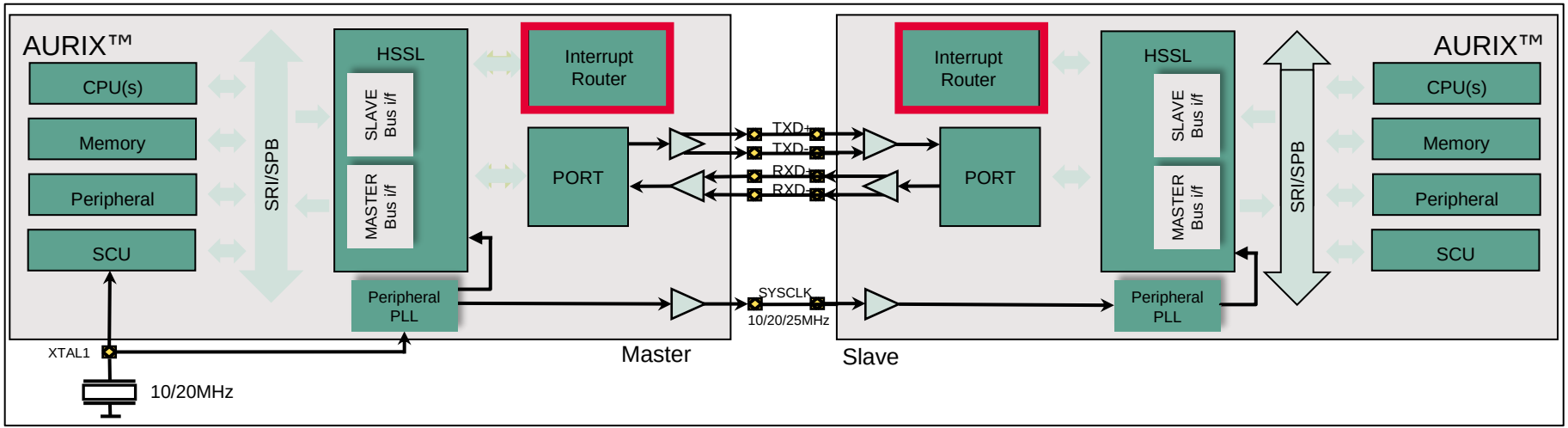

- HSSL module provides its interrupts to interrupt router for further distribution (to DMA and CPUx) and priorization
- Interrupts provided by HSSL are used to monitor the communication and status of the module
- On top, to trigger interrupts from remote, HSSL module provides four functional TRIGGER-interrupts
- TRIGGER-interrupts are mostly used for short latency notifications to CPUx, typically for remote function calls implemented inside software

Copyright © Infineon Technologies AG 2024. All rights reserved.

HSSL
System integration

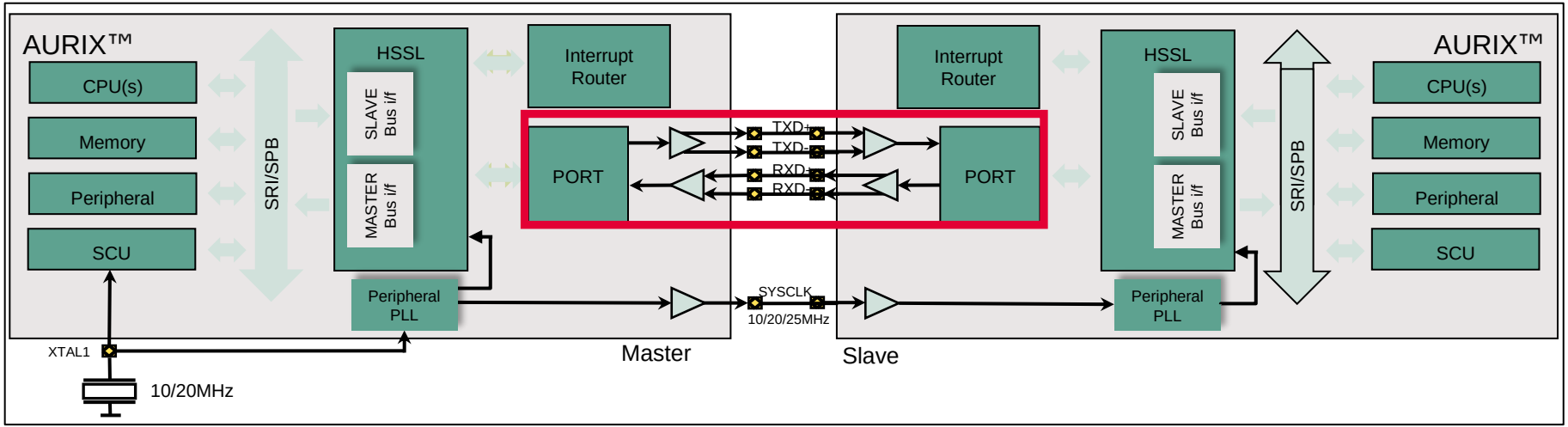

- HSSL uses four port pins for low voltage differential signaling. One LVDS-pair is used as output and one LVDS-pair is used as input
- Terminal resistors are integrated into the pads and can be optionally enabled

Copyright © Infineon Technologies AG 2024. All rights reserved.

Application example
Integrate resources of two AURIX™ into one system

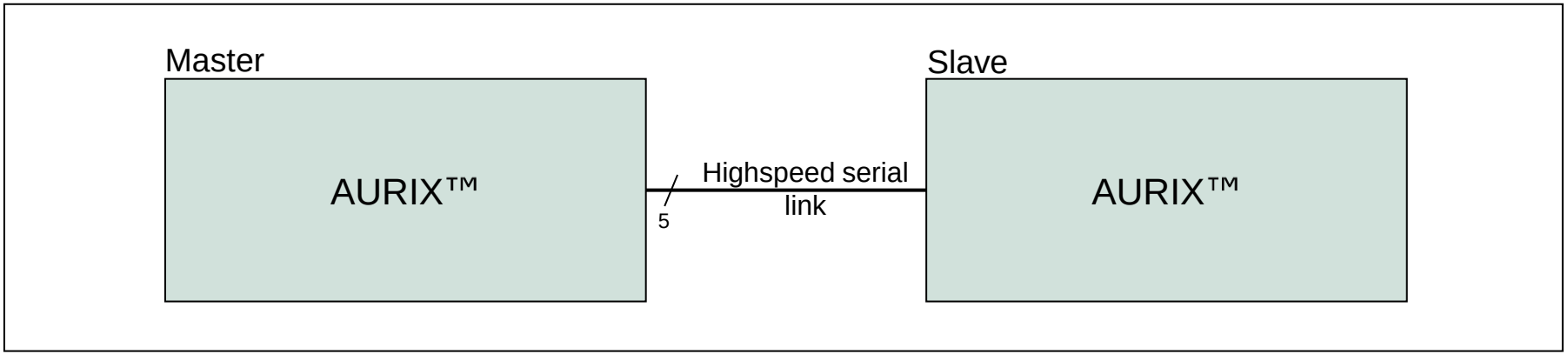

Overview

› Smoothly integrate two AURIX™ into one system, allowing both devices to have full control and flexibility in controlling the resources of each other

Advantages

› Enable safety applications with upscaled performance and functional extension, if the resources given by only one AURIX™ device do not meet the system requirements

› Use technologies like remote function calls, remote register access and short latency synchronization between two AURIX™

Copyright © Infineon Technologies AG 2024. All rights reserved.

Application example
Integrate AURIX™ and FPGA into one system

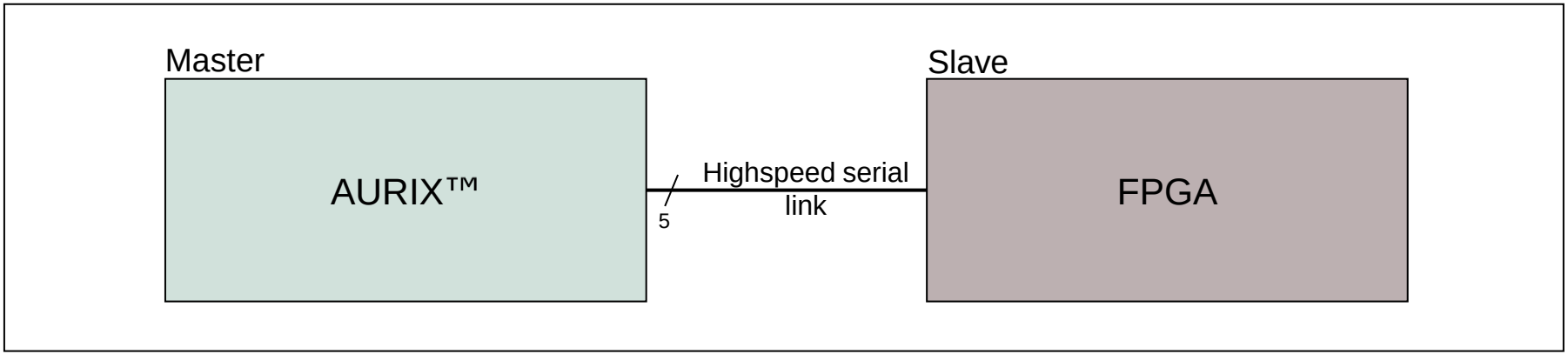

Overview

› Smoothly integrate AURIX™ and FPGA into one system, allowing both systems to have full control and flexibility in controlling the resources of each other

Advantages

› Extend functional safety applications up to ASIL-D level provided by AURIX™ with the flexibility and feature set brought to the table by FPGA
› Use technologies like remote function calls, remote register access and short latency synchronization between FPGA and AURIX™

Copyright © Infineon Technologies AG 2024. All rights reserved.

Trademarks

All referenced product or service names and trademarks are the property of their respective owners.

Edition 2024-09
Published by
Infineon Technologies AG
81726 Munich, Germany

© 2024 Infineon Technologies AG.
All Rights Reserved.

Do you have a question about this document?
Email: erratum@infineon.com

Document reference
AURIX_3_High_ Speed_ Serial_Link

IMPORTANT NOTICE

The information given in this document shall in no event be regarded as a guarantee of conditions or characteristics ("Beschaffenheitsgarantie") .

With respect to any examples, hints or any typical values stated herein and/or any information regarding the application of the product, Infineon Technologies hereby disclaims any and all warranties and liabilities of any kind, including without limitation warranties of non-infringement of intellectual property rights of any third party.

In addition, any information given in this document is subject to customer's compliance with its obligations stated in this document and any applicable legal requirements, norms and standards concerning customer's products and any use of the product of Infineon Technologies in customer's applications.

The data contained in this document is exclusively intended for technically trained staff. It is the responsibility of customer's technical departments to evaluate the suitability of the product for the intended application and the completeness of the product information given in this document with respect to such application.

For further information on the product, technology, delivery terms and conditions and prices please contact your nearest Infineon Technologies office (www.infineon.com).

WARNINGS

Due to technical requirements products may contain dangerous substances. For information on the types in question please contact your nearest Infineon Technologies office.

Except as otherwise explicitly approved by Infineon Technologies in a written document signed by authorized representatives of Infineon Technologies, Infineon Technologies' products may not be used in any applications where a failure of the product or any consequences of the use thereof can reasonably be expected to result in personal injury.

Copyright © Infineon Technologies AG 2024. All rights reserved.


Infineon