

FCE
Flexible CRC Engine

AURIX™ TC4xx Microcontroller

V1.0.0 2024-09

Please read the Important Notice and Warnings at the end of this document

FCE
Flexible CRC engine

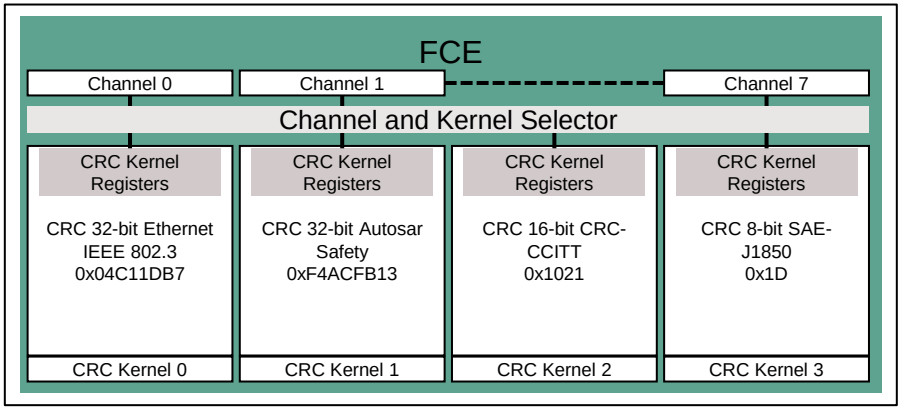

Highlights

- The Flexible CRC Engine FCE is used to compute cyclic redundancy checksums without CPU intervention
- Parallel CRC implementation calculates CRC checksum of a word within 1 SPB clock cycle
- 8 CRC channels that can be used with any of the kernels

Key Features

Multiple CRC polynomial kernels

Configurable CRC parameters

Automatic checksum checks

Customer Benefits

- Different CRC variants are supported: CRC32, CRC16 and CRC8
- CRC algorithms can be adapted to the application needs
- Automated comparison of expected vs. calculated checksum

Copyright © Infineon Technologies AG 2024. All rights reserved.

FCE
Multiple CRC polynomial kernels

- The generic architecture of an FCE CRC Kernel is shown on the right
- 4 such kernels are supported:
  - Kernel 0 : IEEE 802.3 CRC32 Ethernet polynomial: 0x04C11DB71
  - Kernel 1 : Autosar safety CRC32P4 polynomial: 0xF4ACFB13
  - Kernel 2 : 16-bit CRC-CCITT polynomial: 0x1021
  - Kernel 3: SAE J1850 CRC8 polynomial: 0x1D
- The usage of the kernel:
  - The input values need to written to the IR register
  - After 2 clock cycles, the calculated CRC result is available in the RES register

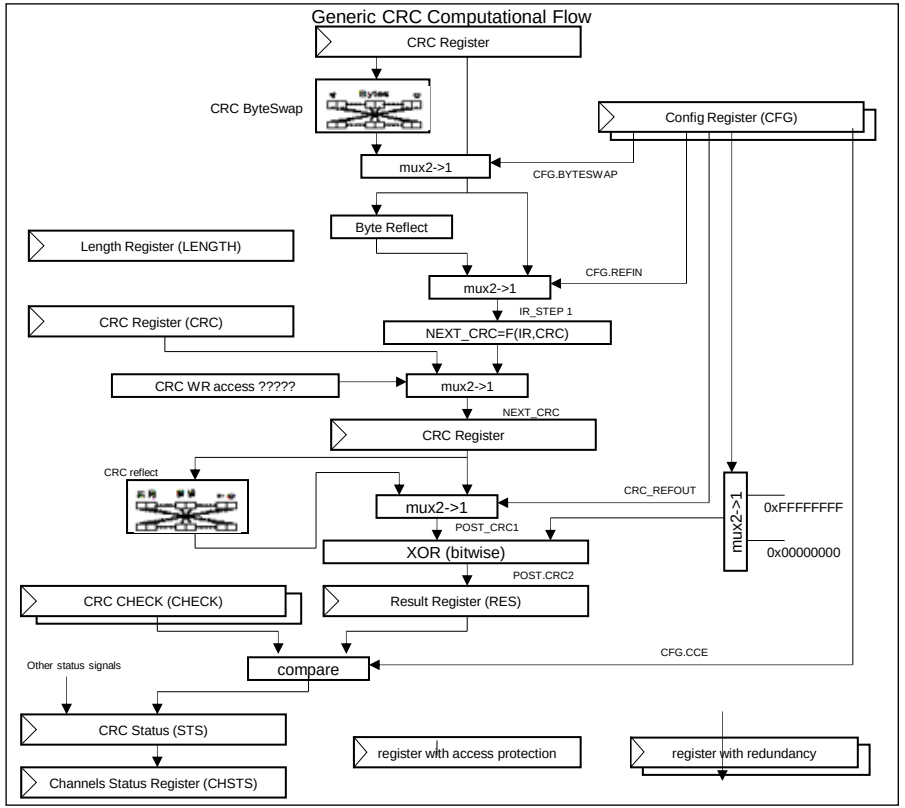

Copyright © Infineon Technologies AG 2024. All rights reserved.

FCE
Configurable CRC parameters

- The supported configurations for each kernel are shown on the right
- The length of the message can be configured
- For the CRC computation, the following configurations are important:
  - Input byte reflection
  - Output bit reflection
  - Output XOR (inversion)

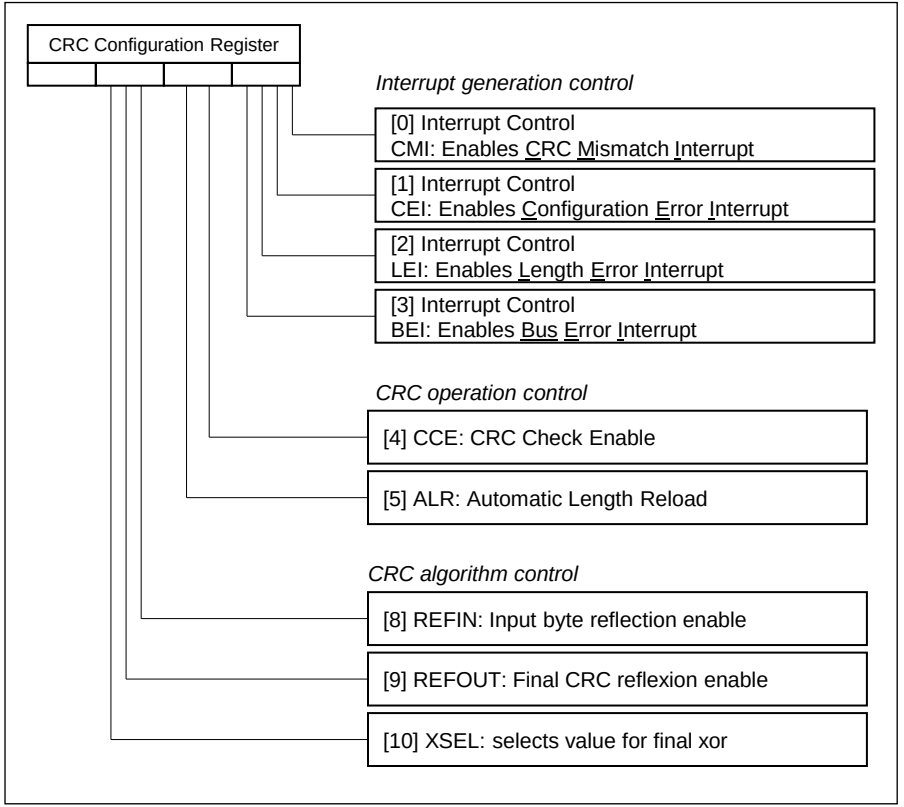

Copyright © Infineon Technologies AG 2024. All rights reserved.

FCE
Automatic checksum checks

- The FCE supports an automatic checksum checks at the end of a message
- This means the FCE can be programmed to generate an interrupt, in case the CRC result does not match an expected CRC value

Copyright © Infineon Technologies AG 2024. All rights reserved.

FCE
System integration

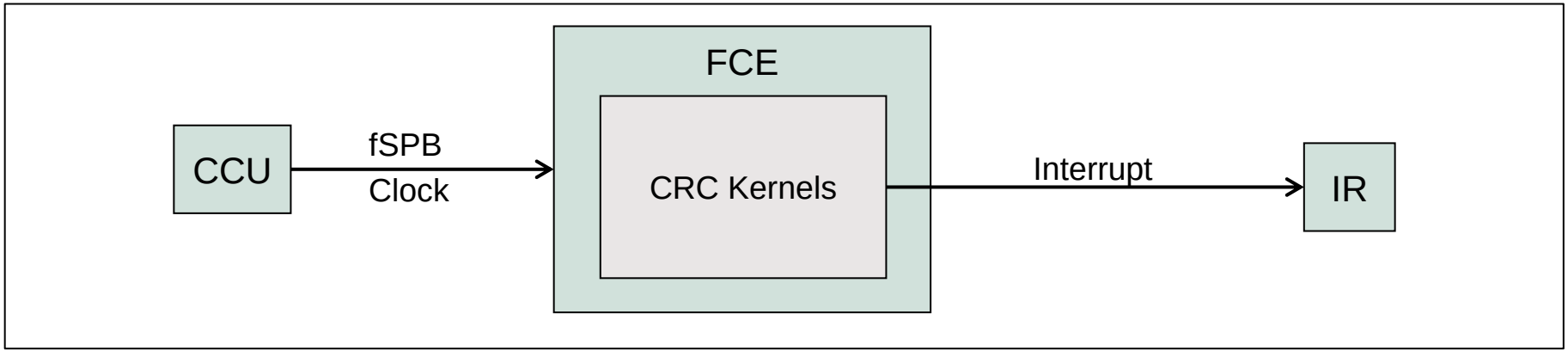

› The FCE
  – gets its clock from the System Peripheral Bus clock (f_{SPB})
  – provides one interrupt line to the interrupt router (IR) indicating:
    – CRC mismatch
    – configuration error
    – length error
    – bus error

Copyright © Infineon Technologies AG 2024. All rights reserved.

Application example
CRC computation

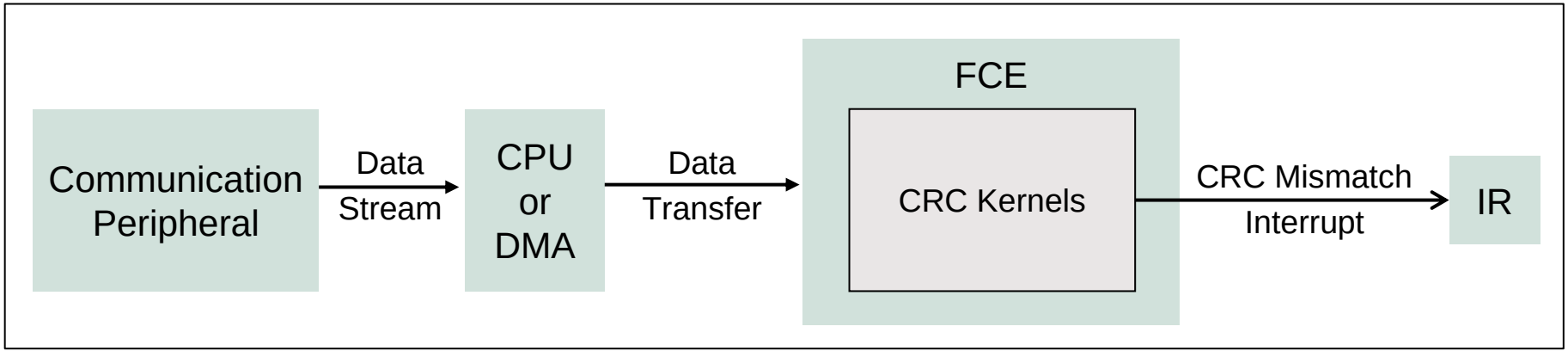

Overview

- FCE can be used to accelerate CRC computation
- For example, a data stream from a communication peripheral is fed to FCE via DMA or CPU

Advantages

- Usage of DMA offloads the CPU
- Automatic CRC check at the end of computation
- CRC32 results from FCE and TriCore™ instruction are identical

Copyright © Infineon Technologies AG 2024. All rights reserved.

Trademarks

All referenced product or service names and trademarks are the property of their respective owners.

Edition 2024-09
Published by
Infineon Technologies AG
81726 Munich, Germany

© 2024 Infineon Technologies AG.
All Rights Reserved.

Do you have a question about this document?
Email: erratum@infineon.com

Document reference
AURIX_3_Flexible_CRC_Engine

IMPORTANT NOTICE

The information given in this document shall in no event be regarded as a guarantee of conditions or characteristics ("Beschaffenheitsgarantie") .

With respect to any examples, hints or any typical values stated herein and/or any information regarding the application of the product, Infineon Technologies hereby disclaims any and all warranties and liabilities of any kind, including without limitation warranties of non-infringement of intellectual property rights of any third party.

In addition, any information given in this document is subject to customer's compliance with its obligations stated in this document and any applicable legal requirements, norms and standards concerning customer's products and any use of the product of Infineon Technologies in customer's applications.

The data contained in this document is exclusively intended for technically trained staff. It is the responsibility of customer's technical departments to evaluate the suitability of the product for the intended application and the completeness of the product information given in this document with respect to such application.

For further information on the product, technology, delivery terms and conditions and prices please contact your nearest Infineon Technologies office (www.infineon.com).

WARNINGS

Due to technical requirements products may contain dangerous substances. For information on the types in question please contact your nearest Infineon Technologies office.

Except as otherwise explicitly approved by Infineon Technologies in a written document signed by authorized representatives of Infineon Technologies, Infineon Technologies' products may not be used in any applications where a failure of the product or any consequences of the use thereof can reasonably be expected to result in personal injury.

Copyright © Infineon Technologies AG 2024. All rights reserved.


Infineon