

CLOCK
Clocking

AURIX™ TC4xx Microcontroller

V1.0.0 2024-09

Please read the Important Notice and Warnings at the end of this document

Clocking
Clocking system

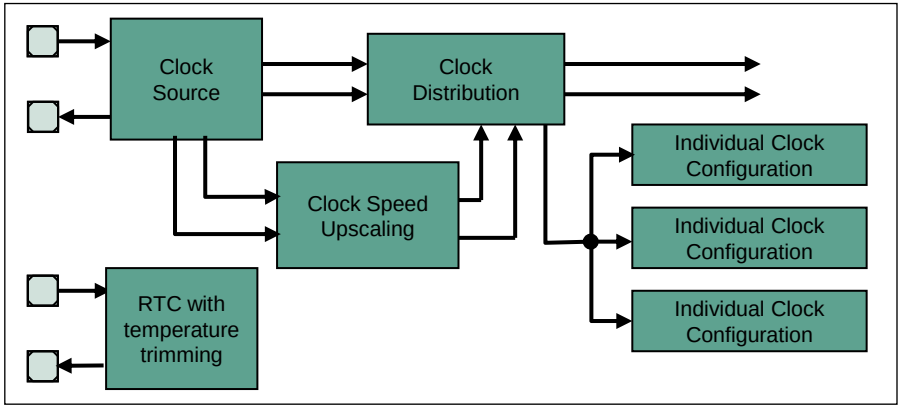

Highlights

- The Clocking System is providing all clocks that are necessary for the microcontroller operation
- Up-scaling of externally supplied clocks to frequencies up to 500 MHz
- Both System and Peripheral clocks with frequency modulation to reduce electromagnetic interference

Key Features

New clock sources: Real time clock using 32 kHz crystal oscillator and ramp up oscillator

Clock speed upscaling

Clock distribution

Customer Benefits

- Accurate, low power real time clock
- Graceful clock frequency ramping
- Flexible clock configuration according to application needs
- Increased performance and optimized power consumption

Copyright © Infineon Technologies AG 2024. All rights reserved.

Clocking
New clock sources: Real time clock using 32 kHz crystal oscillator

Car left in the parking garage without GPS or GSM connection



OEM requirement e.g. the RTC of the car needs to have less deviation than 10 sec per 24 hours

→ 116 ppm requirement on system level

This accuracy is not possible to achieve with 70 kHz or 100 MHz back up clock of the SCR module

AURIX™ TC3xx system solutions

- Periodic system wakeup with calibration of the RTC with 100 MHz back-up clock
- Periodic system wakeup with calibration of the RTC with main oscillator (high SW complexity and not better than ~500 ppm)
- External CMOS clock generator for RTC (very expensive)

AURIX™ TC4xxx New Solution
Use 32 kHz crystal oscillator in standby mode Good compromise in term of cost, SW complexity, accuracy and low power

Copyright © Infineon Technologies AG 2024. All rights reserved.

Clocking
New clock sources: Ramp up oscillator

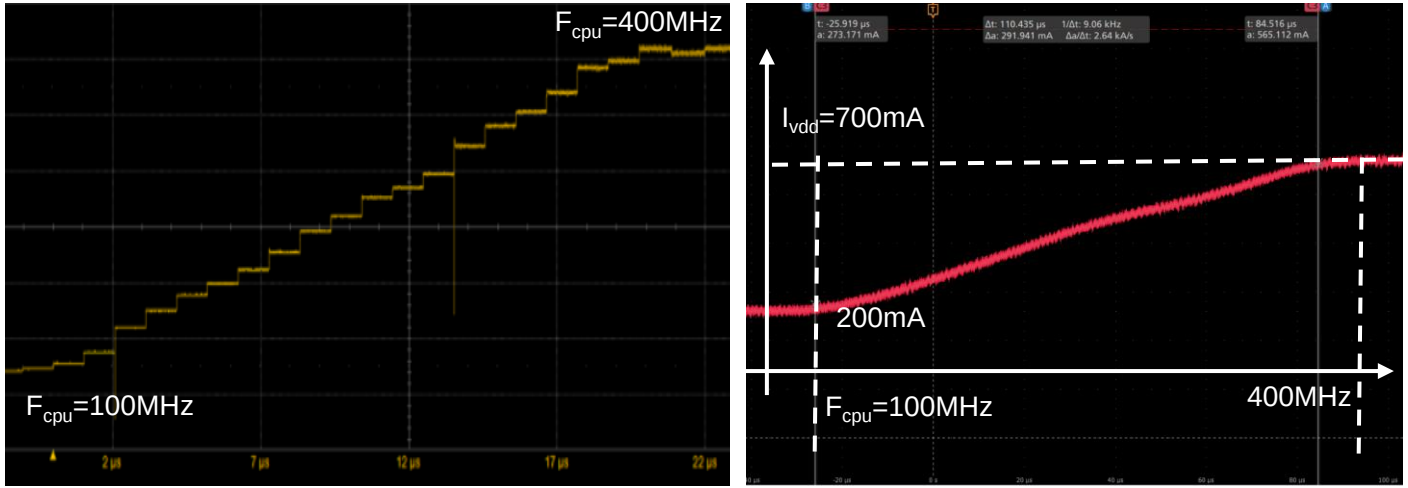

- A second on-chip oscillator provides a linear frequency ramp clock, which minimizes current jumps in the system clock tree during power up/down, resets or when a clock emergency occurs
- The current ramp ensures no overshoot/undershoot occurs in the core voltage

Copyright © Infineon Technologies AG 2024. All rights reserved.

Clocking
Clock speed upscaling

- Aside from the pure clock generation options, there are several support functions which aim to enable an easier and more convenient control
- Generally, the CPU operating speed is about 10 times higher than the speed of the crystal used as clock source
- Therefore 2 Phase Lock Loops (PLLs) are provided for upscaling the clock frequency for the system and the peripherals (with additional 3rd PLL for audio purposes on some devices)
- The role of the PLL is to convert a low-frequency external clock signal into a high-speed internal clock in order to maximize the performance
- The PLLs from AURIX™ also have fail-safe logic that detects degenerated external clock behaviors such as abnormal frequency deviations or total loss of the external clock
- It reports if it loses its lock on the reference clock in order to support a switch from the PLL clock to internal clock sources (e.g. the EVR)
- In these cases, emergency actions can be defined and implemented

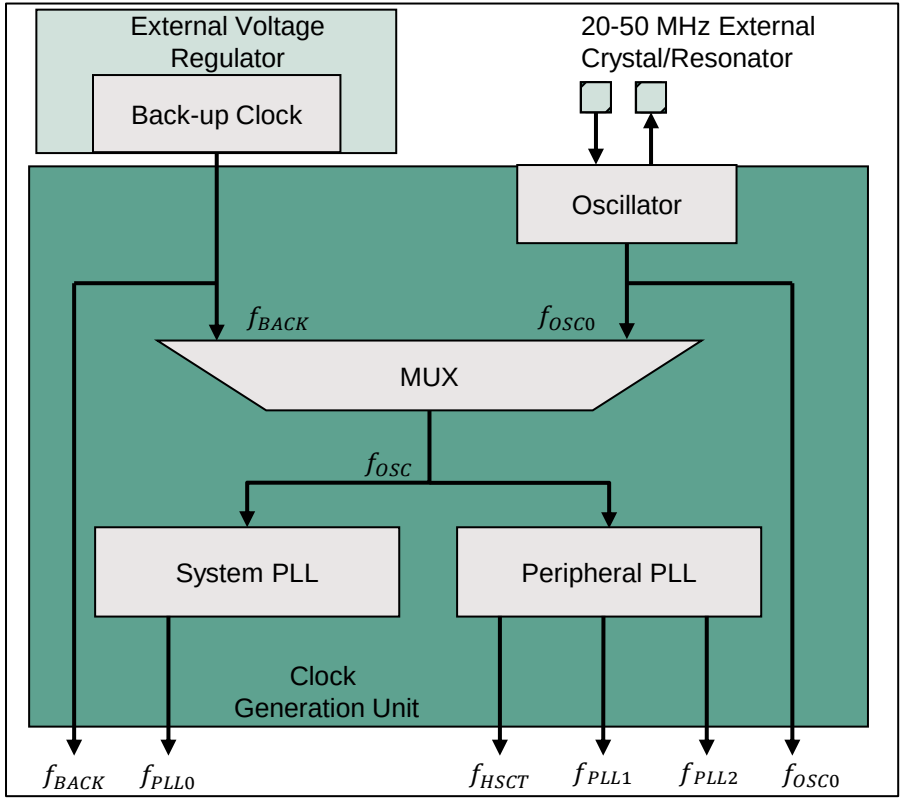

Copyright © Infineon Technologies AG 2024. All rights reserved.

Clocking
Clock distribution

- Based on the clock source and the clock speed upscaling, different clocks are defined and, furthermore, they need to be distributed through the system to the single peripherals and CPUs in a way that enables these modules to operate in the best way in terms of performance and power consumption
- For the clock distribution, the system is split into several sub-clock domains where the clock speed could be configured individually (with the intrinsic restrictions established by the internal interfaces)
- The clock distribution is done via the Clock Control Unit (CCU), which receives the clocks created by PLLs, the back-up clock and the oscillator clock. These clocks are either forwarded directly or divided to supply the sub-clock domains
- This approach increases the flexibility of the system by enabling the user to configure the clock individually for the different modules

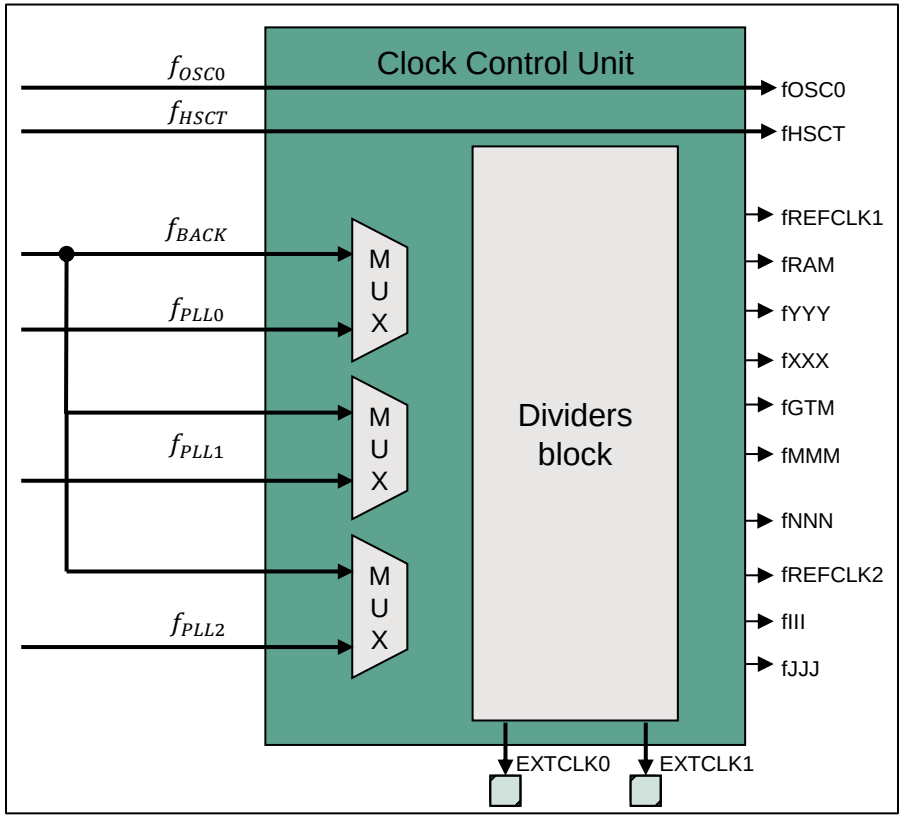

Copyright © Infineon Technologies AG 2024. All rights reserved.

Clocking
System integration

- AURIX™ TC4xx combines different clocking sub-blocks, which allow a very flexible clock generation for a device
- The frequency can be programmed for an optimal ratio between performance and power consumption
- The PLLs, the clock distribution (CCU) and clock generation unit (CGU) are connected to the System Control Unit (SCU). This enables the monitoring of the frequencies and ensuring that the proper safety measures are taken

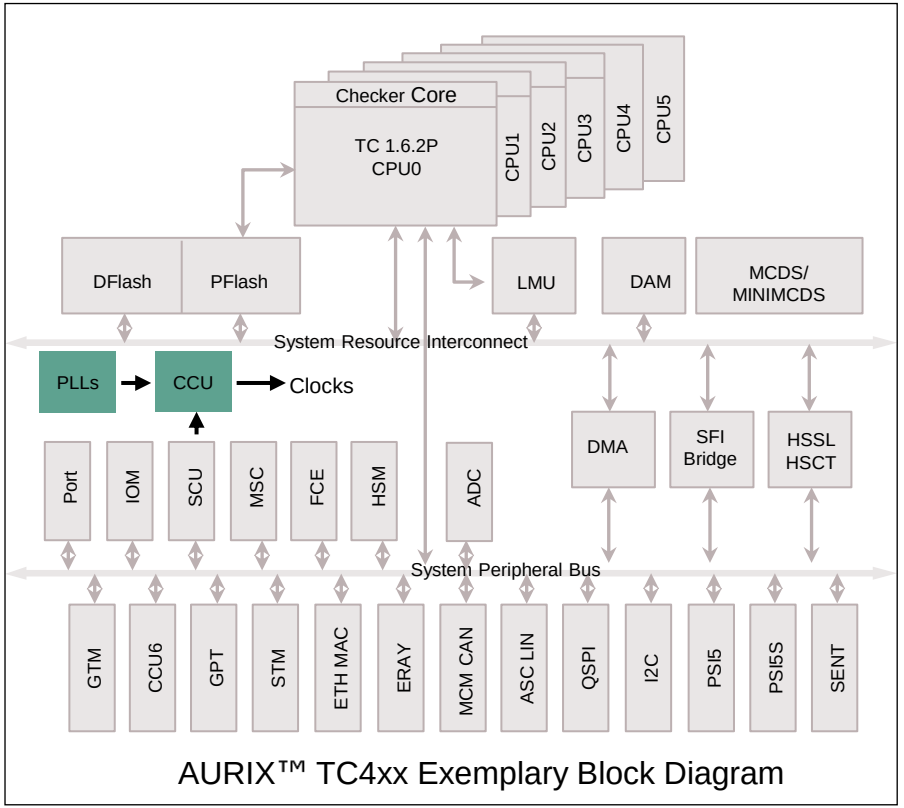

AURIX™ TC4xx Exemplary Block Diagram

Copyright © Infineon Technologies AG 2024. All rights reserved.

Trademarks

All referenced product or service names and trademarks are the property of their respective owners.

Edition 2024-09
Published by
Infineon Technologies AG
81726 Munich, Germany

© 2024 Infineon Technologies AG.
All Rights Reserved.

Do you have a question about this document?
Email: erratum@infineon.com

Document reference
AURIX_3_Clocking

IMPORTANT NOTICE

The information given in this document shall in no event be regarded as a guarantee of conditions or characteristics ("Beschaffenheitsgarantie") .

With respect to any examples, hints or any typical values stated herein and/or any information regarding the application of the product, Infineon Technologies hereby disclaims any and all warranties and liabilities of any kind, including without limitation warranties of non-infringement of intellectual property rights of any third party.

In addition, any information given in this document is subject to customer's compliance with its obligations stated in this document and any applicable legal requirements, norms and standards concerning customer's products and any use of the product of Infineon Technologies in customer's applications.

The data contained in this document is exclusively intended for technically trained staff. It is the responsibility of customer's technical departments to evaluate the suitability of the product for the intended application and the completeness of the product information given in this document with respect to such application.

For further information on the product, technology, delivery terms and conditions and prices please contact your nearest Infineon Technologies office (www.infineon.com).

WARNINGS

Due to technical requirements products may contain dangerous substances. For information on the types in question please contact your nearest Infineon Technologies office.

Except as otherwise explicitly approved by Infineon Technologies in a written document signed by authorized representatives of Infineon Technologies, Infineon Technologies' products may not be used in any applications where a failure of the product or any consequences of the use thereof can reasonably be expected to result in personal injury.

Copyright © Infineon Technologies AG 2024. All rights reserved.


Infineon