Application Brief

Automotive BLDC Motor Drive Kit

Scalable Solutions for Low Voltage 3-Phase Motor Control

THE KIT IS BUILT around the two novel Infineon MCU's, namely the XC886 and the XC2236N both capable of running sensor(less).

Coming along with optimized motor control software as well as a digitally isolated real time monitoring tool, the kit offers an easy-to-use reference platform. As interface between MCU and the power-stage, the TLE 7184F bridge driver IC is used. This new member of the 3-phase bridge driver family is a highly integrated driver IC for up to six external n-channel MOSFETs, building the B6 bridge, to drive a Permanent Magnet Synchronous Motor (PMSM).

The Application Kit is designed for the purpose of motor control trainings/ seminars and to evaluate the performance of real time capabilities of the Infineon microcontrollers. It offers designers a shorter time-to-market for energy efficient motor control designs targeting excellent torque dynamics, reduced noise and high system reliability.

Benefit of FOC

Advanced motor control techniques are increasingly being used in consumer and industrial drives owing to the growing design focus on higher efficiency, better dynamic response and reduced audible noise. In order to enable rapid development of cost-effective designs, Infineon offers a new FOC Motor Drive Application Kit.

Complete Software Package Including

- Easy motor parameter configuration
- DriveMonitor - Graphical User Interface for real time control and monitoring
- Optimized sensorless FOC source code for PMSM
  - Speed PI controller
  - Two current PI controller (I_d and I_q)
- Free tool chain
- Fast flash programming via JTAG



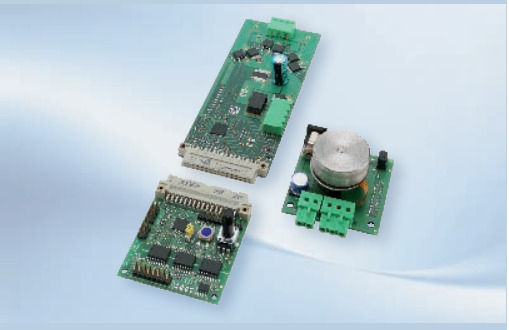

www.infineon.com/FOCdrive

Ordering Code

- KIT_AK_TLE7184_V1

Key Features

- Scalable 3-phase inverter
- TLE 7184F Power board (12V – 24V/20A)
- PMSM motor
- 12V switch mode power supply
- XC886 (8-bit) with 16-bit arithmetic based MCU drive card capable of running sensor(less) (available for $T_{ambient}$ up to 150°C)
- XC2236N (16-bit) based MCU drive card capable of running sensor(less)
- Software packages: FOC and V/f for XC886 and XC2236N
- Integrated protection features for high system reliability
- Digital isolated real time monitoring tool
- Compiler and debugger
- Using Infineon p-channel MOSFET for reverse-battery protection, CAN transceiver, voltage regulators and 6 x n-channel MOSFETs for the B6 power stage

Applications

BLDC motors in:

- Automotive applications
  - cooling fans
  - HVAC
  - oil/water/fuel pump
  - electronic power steering
  - small electric vehicle
- Industrial applications
  - cordless tools
  - automation
  - low-voltage solar water pumps
  - house-hold robotics

Automotive BLDC Motor Drive Kit

Scalable Solutions for Low Voltage 3-Phase Motor Control

Scalable Motor Control Solutions Using XC800/XC2000 and 3-Phase Bridge Driver ICs

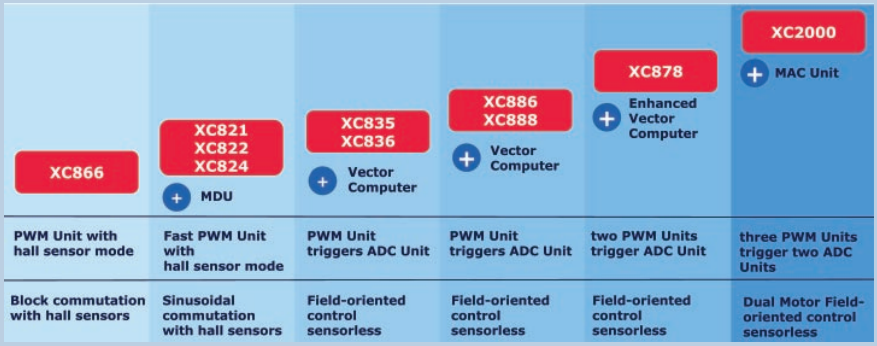

BLDC Bridge Driver Selection Matrix

TLE7183F	5.5...28V	0..100% Duty Cycle	1 OPAmp	No VReg	2 Bit Diagnosis
TLE7184F	7.0...40V	0...95% Duty Cycle	1 OPAmp	5V LDO integrated	1 Bit Diagnosis
TLE7185E	5.5...40V	0...95% Duty Cycle	0 OPAmp	No VReg	1 Bit Diagnosis
TLE7188F	5.5...28V	0..100% Duty Cycle	2 OPAmps	No VReg	2 Bit Diagnosis
TLE7189F	5.5...28V	0..100% Duty Cycle	2 OPAmps	No VReg	2 Bit Diagnosis

8-bit MCU XC886

- Cost-effective 8-bit µCs with 16-bit motor-control performance
- Built-in vector computer for Field Oriented Control
- Powerful motor control peripheral set: CAPCOM6 and 10-bit ADC
- Up to 32kB Flash
- Up to 1.75kB RAM
- TQFP-48

16-bit MCU XC2236N

- High performance 16-bit µCs with MAC unit supporting single cycle 16 x 16bit multiplication and add
- Powerful motor control peripheral set
- 2x CAPCOM6 modules
- 2x 10-bit ADC modules
- Up to 320kB Flash
- Up to 34kB RAM
- LQFP-64

Application Board

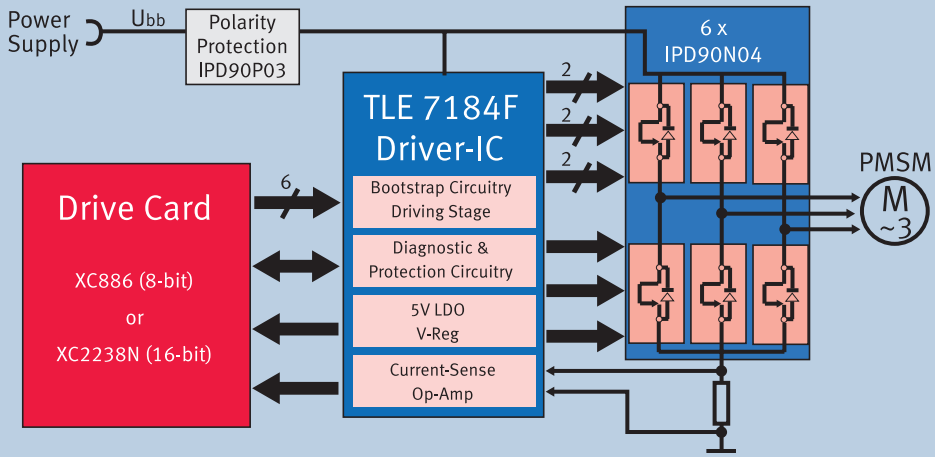

Published by
Infineon Technologies AG
85579 Neubiberg, Germany

© 2010 Infineon Technologies AG.
All Rights Reserved.

Visit us:
www.infineon.com

Order Number: B158-H9365-G1-X-7600
Date: 04/ 2010

ATTENTION PLEASE!
The information given in this document shall in no event be regarded as a guarantee of conditions or characteristics ("Beschaffenheitsgarantie"). With respect to any examples or hints given herein, any typical values stated herein and/or any information regarding the application of the device, Infineon Technologies hereby disclaims any and all warranties and liabilities of any kind, including without limitation warranties of non-infringement of intellectual property rights of any third party.

INFORMATION
For further information on technology, delivery terms and conditions and prices please contact your nearest Infineon Technologies Office (www.infineon.com).

WARNINGS
Due to technical requirements components may contain dangerous substances. For information on the types in question please contact your nearest Infineon Technologies Office. Infineon Technologies Components may only be used in life-support devices or systems with the express written approval of Infineon Technologies, if a failure of such components can reasonably be expected to cause the failure of that life-support device or system, or to affect the safety or effectiveness of that device or system. Life support devices or systems are intended to be implanted in the human body, or to support and/or maintain and sustain and/or protect human life. If they fail, it is reasonable to assume that the health of the user or other persons may be endangered.