Errata Sheet

Rel. 1.2, 02.02.2007

Device	**TC1762**
Marking/Step	**EES-AB, ES-AB, AB**
Package	**PG-LQFP-176-2**

This Errata Sheet describes the deviations from the current user documentation.The module oriented classification and numbering system uses an ascending sequence over several derivatives, including already solved deviations. So gaps inside this enumeration can occur.

Table 1 Current Documentation

TC1766 User's Manual	V1.1	Aug. 2005
TC1762 Data Sheet	V0.4	Apr. 2006
TriCore 1 Architecture	V1.3.6	Oct. 2005
Flash Firmware Status Sheet	V1.2	Dec. 2006

Each erratum identifier follows the pattern Module_Arch.TypeNumber:

- **Module**: subsystem or peripheral affected by the erratum
- **Arch**: microcontroller architecture where the erratum was firstly detected.
  - **AI**: Architecture Independent (detected on module level)
  - **CIC**: Companion ICs
  - **TC**: TriCore (32 bit)
  - **X**: XC1xx / XC2xx (16 bit)
  - **XC8**: XC8xx (8 bit)
  - **none**: C16x (16 bit)
- **Type**: none - Functional Deviation; '**P**' - Parametric Deviation; '**H**' - Application Hint; '**D**' - Documentation Update
- **Number**: ascending sequencial number within the three previous fields. As this sequence is used over several derivatives, including already solved deviations, gaps inside this enumeration can occur.

Note: Devices marked with EES or ES are engineering samples which may not be completely tested in all functional and electrical characteristics, therefore they should be used for evaluation only.

Note: This device is equipped with a TriCore "TC1.3" Core. Some of the errata have a workaround which is possibly supported by the compiler tool vendor. Some corresponding compiler switches need possibly to be set. Please see the respective documentation of your compiler.

The specific test conditions for EES and ES are documented in a separate Status Sheet.

1 History List / Change Summary

Table 2 History List

Version	Date	Remark
1.0	18.01.2006	
1.1	05.06.2006	
1.2	02.02.2007	

Table 3 Functional Deviations

Functional Deviation	Short Description	Chg	Pg
ADC_TC.018	Resetting CON.SCNM triggers service for all channels		13
ADC_TC.019	No Interrupt when Queue-Level-Pointer becomes ZERO		13
ADC_TC.020	Backup register not set but QUEUE_0 valid bit is wrongly reset		13
ADC_TC.021	ADCx_CON.QEN bit is set but the queue never starts running		14
ADC_TC.023	Setting the MSS-flag doesn't generate an interrupt in TESTMODE		14
ADC_TC.034	Queue-reset does not reset all valid-bits in the queue-registers		15
ADC_TC.037	False service-request for cancelled autoscan		15
ADC_TC.040	16th queue-entry gets lost		15
ADC_TC.041	Queue-entry might be lost if inject-trigger-source is cleared		16

Table 3 Functional Deviations

Functional Deviation	Short Description	Chg	Pg
ADC_TC.042	Queue-warning-limit interrupt generated incorrectly		16
ADC_TC.043	High Fractional Divider values and injection mode set false parameters		18
ADC_TC.045	Queue trigger not reliable		19
ADC_TC.047	RMW problem in conjunction with error acknowledge		19
ADC_TC.048	Wrong CHCON register might be used by inserted conversion		20
ADC_TC.051	Reset of AP bit does not reliably clear request- pending bits		21
ADC_TC.054	Write access to CHIN-register		22
ADC_TC.055	Injection in cancel mode does not start conversion		23
ADC_TC.058	CHIN.CINREQ not reset in every case		23
ADC_TC.059	Flags in MSS0 and MSS1 are not set after interrupt		24
BCU_TC.003	OCDS debug problem during bus master change		24
BCU_TC.004	RMW problem in conjunction with small timeout values	Update	25
CPU_TC.004	CPU can be halted by writing DBGSR with OCDS Disabled		26
CPU_TC.008	IOPC Trap taken for all un-acknowledged Co-processor instructions		26
CPU_TC.012	Definition of PACK and UNPACK fail in certain corner cases		27
CPU_TC.013	Unreliable context load/store operation following an address register load instruction		28

Table 3 Functional Deviations

Functional Deviation	Short Description	Chg	Pg
CPU_TC.014	Wrong rounding in 8000*8000<<1 case for certain MAC instructions		28
CPU_TC.046	FPI master livelock when accessing reserved areas of CSFR space		29
CPU_TC.048	CPU fetches program from unexpected address		30
CPU_TC.053	PMI line buffer is not invalidated during CPU halt		31
CPU_TC.059	Idle Mode Entry Restrictions		31
CPU_TC.060	LD.[A,DA] followed by a dependent LD.[DA,D,W] can produce unreliable results		32
CPU_TC.062	Error in circular addressing mode for large buffer sizes		34
CPU_TC.063	Error in advanced overflow flag generation for SHAS instruction		35
CPU_TC.064	Co-incident FCU and CDO traps can cause system-lock		35
CPU_TC.065	Error when unconditional loop targets unconditional jump		36
CPU_TC.067	Incorrect operation of STLCX instruction		37
CPU_TC.068	Potential PSW corruption by cancelled DVINIT instructions		38
CPU_TC.069	Potential incorrect operation of RSLCX instruction		39
CPU_TC.070	Error when conditional jump precedes loop instruction		40
CPU_TC.071	Error when Conditional Loop targets Unconditional Loop		41

Table 3 Functional Deviations

Functional Deviation	Short Description	Chg	Pg
CPU_TC.072	Error when Loop Counter modified prior to Loop instruction		42
CPU_TC.073	Debug Events on Data Accesses to Segment E/F Non-functional		42
CPU_TC.074	Interleaved LOOP/LOOPU instructions may cause GRWP Trap		43
CPU_TC.075	Interaction of CPS SFR and CSFR reads may cause livelock		44
CPU_TC.078	Possible incorrect overflow flag for an MSUB.Q and an MADD.Q instruction		45
CPU_TC.079	Possible invalid ICR.PIPN when no interrupt pending		46
CPU_TC.080	No overflow detected by DVINIT instruction for MAX_NEG / -1		47
CPU_TC.081	Error during Load A[10], Call / Exception Sequence		48
CPU_TC.082	Data corruption possible when Memory Load follows Context Store		49
CPU_TC.083	Interrupt may be taken following DISABLE instruction		50
CPU_TC.084	CPS module may error acknowledge valid read transactions		51
CPU_TC.086	Incorrect Handling of PSW.CDE for CDU trap generation		51
CPU_TC.087	Exception Prioritisation Incorrect		52
CPU_TC.088	Imprecise Return Address for FCU Trap		54
CPU_TC.089	Interrupt Enable status lost when taking Breakpoint Trap		55
CPU_TC.094	Potential Performance Loss when CSA Instruction follows IP Jump		56

Table 3 Functional Deviations

Functional Deviation	Short Description	Chg	Pg
CPU_TC.095	Incorrect Forwarding in SAT, Mixed Register Instruction Sequence		58
CPU_TC.096	Error when Conditional Loop targets Single Issue Group Loop		59
CPU_TC.097	Overflow wrong for some Rounding Packed Multiply-Add instructions.		60
CPU_TC.098	Possible PSW.V Error for an MSUB.Q instruction variant when both multiplier inputs are of the form 0x8000xxxx		61
CPU_TC.099	Saturated Result and PSW.V can error for some q format multiply-accumulate instructions when computing multiplications of the type 0x80000000*0x8000 when n=1		63
CPU_TC.100	Mac instructions can saturate the wrong way and have problems computing PSW.V		71
CPU_TC.101	MSUBS.U can fail to saturate result, and MSUB(S).U can fail to assert PSW.V		75
CPU_TC.102	Result and PSW.V can be wrong for some rounding, packed, saturating, mac instructions.		77
CPU_TC.103	Spurious parity errors can be generated		79
CPU_TC.104	Double-word Load instructions using Circular Addressing mode can produce unreliable results		80
DMA_TC.004	Reset of registers OCDSR and SUSPMR is connected to FPI reset		82
DMA_TC.005	Do not access MExPR, MExAENR, MExARR with RMW instructions		83

Table 3 Functional Deviations

Functional Deviation	Short Description	Chg	Pg
DMA_TC.007	CHSRmn.LXO bit is not reset by channel reset		83
DMA_TC.009	Transaction flagged as lost, but nevertheless executed		83
DMA_TC.010	Channel reset disturbed by pattern found event		84
DMA_TC.011	Pattern search for unaligned data fails on certain patterns		84
DMA_TC.012	No wrap around interrupt generated		85
DMI_TC.005	DSE Trap possible with no corresponding flag set in DMI_STR		85
FADC_TC.005	Equidistant multiple channel-timers		86
FLASH_TC.029	In-System flash operations fails		87
FPU_TC.001	FPU flags always update with FPU exception		91
MLI_TC.006	Receiver address is not wrapped around in downward direction		91
MLI_TC.007	Answer frames do not trigger NFR interrupt if RIER.NFRIE=10_B and Move Engine enabled		92
MLI_TC.008	Move engines can not access address $F01E0000_H$		93
MSC_TC.004	MSC_USR write access width		93
MSC_TC.006	Upstream frame startbit not recognized		93
MSC_TC.007	No interrupt generated for first bit out		97
MultiCAN_AI.040	Remote frame transmit acceptance filtering error	New	98
MultiCAN_AI.041	Dealloc Last Obj	New	99

Table 3 Functional Deviations

Functional Deviation	Short Description	Chg	Pg
MultiCAN_AI.042	Clear MSGVAL during transmit acceptance filtering	New	99
MultiCAN_AI.043	Dealloc Previous Obj	New	100
MultiCAN_AI.044	RxFIFO Base SDT	New	101
MultiCAN_AI.045	OVIE Unexpected Interrupt	New	101
MultiCAN_AI.046	Transmit FIFO base Object position	New	101
MultiCAN_TC.025	RXUPD behavior	Update	102
MultiCAN_TC.026	MultiCAN Timestamp Function		102
MultiCAN_TC.027	MultiCAN Tx Filter Data Remote		103
MultiCAN_TC.028	SDT behavior	Update	103
MultiCAN_TC.029	Tx FIFO overflow interrupt not generated	Update	104
MultiCAN_TC.030	Wrong transmit order when CAN error at start of CRC transmission		106
MultiCAN_TC.031	List Object Error wrongly triggered		106
MultiCAN_TC.032	MSGVAL wrongly cleared in SDT mode		107
MultiCAN_TC.035	Different bit timing modes		107
MultiCAN_TC.037	Clear MSGVAL		109
MultiCAN_TC.038	Cancel TXRQ		110
OCDS_TC.007	DBGSR writes fail when coincident with a debug event		110
OCDS_TC.008	Breakpoint interrupt posting fails for ICR modifying instructions		112
OCDS_TC.009	Data access trigger events unreliable		112
OCDS_TC.010	DBGSR.HALT[0] fails for separate resets		112
OCDS_TC.011	Context lost for multiple breakpoint traps		113

Table 3 Functional Deviations

Functional Deviation	Short Description	Chg	Pg
OCDS_TC.012	Multiple debug events on one instruction can be unpredictable		114
PMI_TC.001	Deadlock possible during Instruction Cache Invalidation		114
PMU_TC.010	ECC wait state feature not functional		114
PWR_TC.010	Pull down on TRST_N required		115
SCU_TC.001	Reading SCU_PTDATx not correct when PTMEM=0		115
SCU_TC.015	Occurrence of unexpected parity error		116
SSC_AI.020	Writing SSOTC corrupts SSC read communication		116
SSC_AI.021	Error detection mechanism difference among implementation and documentation.	New	116
SSC_AI.022	Phase error detection switched off too early at the end of a transmission	New	120
SSC_AI.023	Clock phase control causes failing data transmission in slave mode	New	120
SSC_AI.024	SLSO output gets stuck if a reconfig from slave to master mode happens	New	121
SSC_AI.025	First shift clock period will be one PLL clock too short because not syncronized to baudrate	New	121
SSC_AI.026	Master with highest baud rate set generates erroneous phase error	New	122
SSC_TC.009	SSC_SSOTC update of shadow register		122
SSC_TC.010	SSC not suspended in granted mode		123
SSC_TC.011	Unexpected phase error		123

Table 3 Functional Deviations

Functional Deviation	Short Description	Chg	Pg
SSC_TC.017	Slaveselect (SLSO) delays may be ignored		124

Table 4 Deviations from Electrical- and Timing Specification

AC/DC/ADC Deviation	Short Description	Chg	Pg
ESD_TC.P001	ESD violation		125
FADC_TC.P001	Offset Error during Overload Condition in Single-Ended Mode		125
MLI_TC.P001	Signal time deviates from specification	New	126
PORTS_TC.P001	Output Rise/Fall Times		127
PWR_TC.P009	High cross current at OCDS L2 ports during power up	Update	128
PWR_TC.P010	Power sequence	New	129
SSC_TC.P001	SSC signal times t_{52} and t_{53} deviate from the specification		131

Table 5 Application Hints

Hint	Short Description	Chg	Pg
ADC_TC.H002	Maximum latency for back to back conversion requests		132
ADC_TC.H004	Single Autoscan can only be performed on Group_0		132
ADC_TC.H006	Change of timer reload value		132

Table 5 Application Hints

Hint	Short Description	Chg	Pg
ADC_TC.H007	Channel injection requests overwrite pending requests		133
FLASH_TC.H002	Wait States for PFLASH/DFLASH Read Access		133
FLASH_TC.H004	Guideline for writing Flash command sequences		134
FLASH_TC.H005	Reset during FLASH logical sector erase		134
GPTA_TC.H002	Range limitation on PLL reload		135
GPTA_TC.H003	A write access to GTCXR of disabled GTC may cause an unexpected event		136
MLI_TC.H002	Received write frames may be overwritten when Move Engine disabled		137
MLI_TC.H005	Consecutive frames sent twice at reduced baudrate		138
MLI_TC.H006	Deadlock situation when MLI_TCR.RTY=1	New	138
MultiCAN_TC.H002	Double Synchronization of receive input		139
MultiCAN_TC.H003	Message may be discarded before transmission in STT mode		139
MultiCAN_TC.H004	Double remote request	Update	139
PLL_TC.H005	Increasing PLL noise robustness		140
SCU_TC.H001	Automatic temperature compensation not usable		141
SCU_TC.H003	RTID value of device		141

2 Functional Deviations

ADC_TC.018 Resetting CON.SCNM triggers service for all channels

When resetting one of the two SCNM bits of register ADCx_CON, a service request is misleadingly generated for all channels in the sequence.

Workaround

None

ADC_TC.019 No Interrupt when Queue-Level-Pointer becomes ZERO

The mechanism of the queue storage system is designed to handle and store burst transfers of conversions. In order to have control over the state of data filled in, a programmable warning-level pointer (CON.QWLP), which can trigger a service-request, is implemented. Enabling this specific interrupt service request and programming the warning-level pointer to 00_H resulted in no interrupt generation although the queue-level pointer STAT.QLP reached 0.

Workaround

None

ADC_TC.020 Backup register not set but QUEUE_0 valid bit is wrongly reset

If the BACK-UP register of the source QUEUE contains valid data while the participation-flag of source QUEUE is reset, the VALID bit in the BACK-UP register is unchanged and will not be reset. Erroneously the VALID bit in QUEUE_0 is also reset.

Workaround

None

ADC_TC.021 ADCx_CON.QEN bit is set but the queue never starts running

During a running queue, the enable-bit CON.QEN is cleared by SCON.QENC. After it is stopped, enabling again the queue by writing a "1" to SCON.QENS, sets the CON.QEN bit, but the queue doesn't start running.

Workaround

Clear queue and restart queue with new setup.

ADC_TC.023 Setting the MSS-flag doesn't generate an interrupt in TEST-MODE

It is possible to generate a software triggered interrupt event in TESTMODE (ADCx_CON.SRTEST=1) by setting one of the bitflags in register ADCx_MSS0/1. Due to the fact, that this mechanism is not working, it is not possible to generate a corresponding interrupt by software.

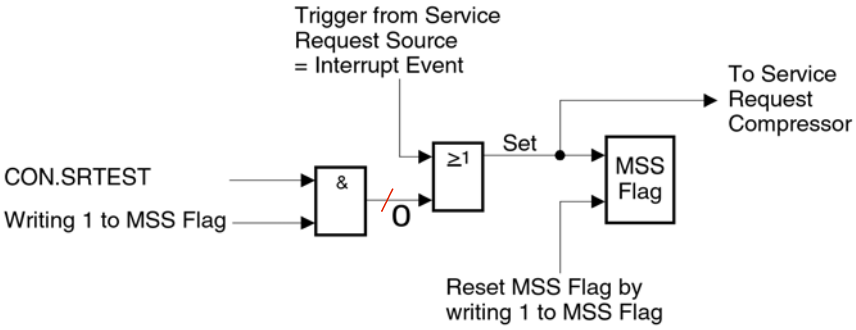

Figure 1

Workaround

Do not use this software-generated interrupt in TESTMODE.

ADC_TC.034 Queue-reset does not reset all valid-bits in the queue-registers

A queue-reset can be performed by writing a "1" on the write-only register-bit SCON.QRS. Then all valid-bits have to be tagged to zero and also the STAT.QF (queue full) and STAT.QLP(level pointer) are set to zero. All this requirements are fulfilled, but the valid-bit of the queue-stage_4 is set to "1" (active) and after some module-cycles a conversion-start is done (if queue enabled) for the channel which is registered in the queue-stage_0.

Some module-cycles later a conversion-start is done (if queue enabled) for the channel which is registered in the queue-stage_0.

Workaround

After resetting the queue by SCON.QRS = 1 the queue has to be enabled with setting SCON.QENS = 1. Wait until the next queue conversion is finished. (STAT. BUSY=1 & STAT.CHTSCC=110 shows the start of the next queue conversion, STAT.BUSY=0 than indicates that it is finished.)

ADC_TC.037 False service-request for cancelled autoscan

The problem occurs if the last channel of an autoscan conversion is cancelled by the injection-trigger-source with higher priority and Cancel-Inject-Repeat mode. Then the service-request, if enabled for autoscan, is activated falsely after finishing the injected conversion. The result is that the service request is handled a second time after finishing the last autoscan-conversion.

Workaround

The autoscan-trigger-source-interrupt- enable should be disabled (register-bit SRNP.ENPAS = 0) and the last autoscan-channel should be detected by the channel-interrupt enabled in the CHCON-register of the last autoscan-channel.

ADC_TC.040 16th queue-entry gets lost

The bug occurs under following conditions:

- The queue is filled with 16 valid entries.
- 14 conversions are already converted without writing a new queue entry.
- The 15th conversion out of the queue is started and the last queue entry is transferred to QUEUE0-register. While the conversion is running for the 15th entry a new queue-entry is filled by writing QR-register.

Then the "old" queue-entry in QUEUE0-register is overwritten by the new queue-entry and gets lost.

Workaround

The software must ensure, that the number of valid queue elements never exceeds 15. This can be observed by checking the queue-level-pointer in register ADSTAT.QLP (value < 0xF).

ADC_TC.041 Queue-entry might be lost if inject-trigger-source is cleared

The bug occurs under the following conditions:

- The queue is filled with more than one valid entry. In a small time window between a queue element was started by the arbiter and the next pending queue element will be accepted by the arbiter, the bit AP.QP will be reset (AP.QP=0).
- A request from the inject-trigger-source was active (AP.CHP=1) and is reset by software (write AP.CHP=0). If the write AP.CHP=0 occurs in the small time window described above the pending queue element will be cleared.

Workaround

Do not reset the inject-trigger-source (never write AP.CHP=0).

ADC_TC.042 Queue-warning-limit interrupt generated incorrectly

The bug occurs under following conditions:

- The queue gets filled completely (queue full).
- The queue-warning-level-pointer (QWLP) is enabled.

- The queue is enabled and queue conversions will be started from the arbiter.

Then the service-request for the warning-level is generated fitting to an queue-element which is one number above the specified queue_element.

Please refer to the following table:

(first queue entry refers to element_0, last queue entry refers to element_15)

Table 6

CON.QWLP	queue_element-nr
CON.QWLP = 0	queue_element-nr = 2
CON.QWLP = 1	queue_element-nr = 3
CON.QWLP = 2	queue_element-nr = 4
CON.QWLP = 3	queue_element-nr = 5
CON.QWLP = 4	queue_element-nr = 6
.....	.....
CON.QWLP = 13	queue_element-nr = 15
CON.QWLP = 14	before queue_element = 15
CON.QWLP = 15	no interrupt

The error does not occur at the following conditions:

- The queue was full, completely emptied in between, and now is in a stage to be filled again.
- The queue was never filled completely.

The following table is valid in these cases:

Table 7

CON.QWLP	queue_element-nr
CON.QWLP = 0	no interrupt generated
CON.QWLP = 1	queue_element-nr = 2
CON.QWLP = 2	queue_element-nr = 3
CON.QWLP = 3	queue_element-nr = 4
CON.QWLP = 4	queue_element-nr = 5

Table 7

CON.QWLP	queue_element-nr
.....	.....
CON.QWLP = 13	queue_element-nr = 14
CON.QWLP = 14	queue_element-nr = 15
CON.QWLP = 15	before queue_element = 15

For CON.QWLP = 0 in addition there is the problem that no interrupt will be generated.

Workaround

Please refer to the tables above.

ADC_TC.043 High Fractional Divider values and injection mode set false parameters

When following 3 conditions are met, then an injected channel conversion will be started with false parameters:

- A conversion is active
- A second conversion with cancel-inject-repeat-mode is initiated either by inject-trigger-source with higher priority or by synchronous-injection.
- The Fractional-Divider is configured in normal-mode with a divider factor larger than 16 (FDR.STEP < 3F0) or in fractional-divider-mode with a clock pause larger than 16 cycles.

Then the running conversion is cancelled and the injected conversion will be started with the right channel-number but with the false parameters: interrupt-enable, interrupt-node-pointer, LCC, BSELA/B.

Workaround

If the "cancel-inject-repeat"-feature is initiated by inject-trigger-source or synchronized injection, then the fractional-divider has to be configured only in the following range:

- in normal mode:

  - FDR.STEP >= 3F0
- in fractional-divider mode:
  - calculate FDR.STEP that a clock pause of maximum 16 module clock cycles is guaranteed.

ADC_TC.045 Queue trigger not reliable

The bug occurs under following conditions:

- The queue wins the arbitration and the conversion of the queue-element out of QUEUE0-register will be started.
- A new queue-element is loaded by writing QR-register within one module-cycle before the arbiter starts the conversion of the queue-element in QUEUE0-register.

Then the conversion of the started queue element in QUEUE0-register runs correctly, but the following queue elements might be corrupted or the complete queue might stall.

Workaround

None, do not use HW queue mechanism.

ADC_TC.047 RMW problem in conjunction with error acknowledge

The problem occurs under following conditions:

- The read part of a RMW returns an error acknowledge (ERR- ACK)
- The next access is a write to a bit-protected register

The problem is, that the write access after the RMW will be performed with the protection mask build for the RMW. Therefore not all bits of the write access will be written (depending on the protection mask of the RMW).

Workaround

ERR-ACK for RMW accesses to the ADC have to be avoided. Therefore RMW accesses to non existing or non writeable addresses in the ADC are forbidden.

ADC_TC.048 Wrong CHCON register might be used by inserted conversion

The bug can occur only in debug mode if the ADC is suspended, if a conversion is active and either

- one or more conversions are pending and a conversion of channel n is inserted from a source with higher priority than the pending sources

or

- no conversion is pending and a conversion of channel n is inserted (the priority does not matter)

Even if all these conditions are true, the bug does not necessarily occur. The occurrence of the bug is related to an internal timing condition. The bug occurs if a further conversion is inserted at the end of an active conversion (up to 20 cycles before the end of the active conversion) and if a suspend request becomes active in this moment.

When the bug occurs:

The inserted conversion is performed

- With the correct request source
- On the correct pin for channel n in case of inserted sequential sources (Channel Injection, Queue)
- Using the wrong CHCON value

If the inserted conversion is from a parallel source (Auto-Scan, Timer, External Event, Software), the wrong CHCON value from the “old” arbitration-winner-channel is used. If the inserted conversion is from a sequential source (Channel Injection, Queue), the CHCON value from the “old” arbitration-winner-channel is used, except Bit fields EMUX and GRPS are taken from the source-specific control register (CHIN or QR)

The result of the conversion is stored in the CHSTAT register for channel n.

- CHSTATn will have the correct values for CRS and CHNR
- CHSTATn may have incorrect values for EMUX, GRPS, and RESULT, based on the use of the wrong CHCON value. from the “old” arbitration-winner-channel. An incorrect MSS0 bit may be set, and an incorrect interrupt may be generated, based on the use of the wrong CHCON value from the “old” arbitration-winner-channel.

Note that all source-request interrupts (defined in SRNP-register) are generated correctly and set in MSS1.

Workaround

Do not use granted suspend mode for the ADC.

ADC_TC.051 Reset of AP bit does not reliably clear request- pending bits

A valid conversion-request of a trigger-source to the arbiter sets automatically the dedicated bit in the AP-register. If a bit in the AP-register is reset by software, then all requests of the respective trigger-source should also be reset by hardware. This is not working in all cases.

If a hardware-caused conversion-start meets exactly the cycle of the bus-access to the AP-register, then the request-pending bits are not cleared. As a consequence of this, the respective AP bit is set to active again one cycle later. The bug applies to all trigger-sources except the "channel injection source", because here only one channel can be selected at a time.

In the described corner case following bugs occur:

1. clearing AP.ASP does not clear the bits ASCRP.ASCRPn
2. clearing AP.QP does not clear the actual valid bit in the queue and disturbs queue-level-pointer
3. clearing AP.SW0P does not clear the bits SW0CRP.SW0CRPn
4. clearing AP.EXP does not clear the bits EXCRP.EXCRPn
5. clearing AP.TP does not clear the bits TCRP.TRPn

Workarounds

For each trigger-source a specific software-sequence is proposed as workaround:

1. Autoscan
   a) write SCN.SRQn = 0x0000 (this causes also that CON.SCNM = 00_B)
   b) write CON.SCNM = 01_B (hardware copies SCN to ASCRP and sets one cycle later AP.ASP = 0_B and CON.SCNM = 00_B)
2. Queue

a) please refer to the errata ADC_TC.045 "no workaround, do not use HW queue mechanism".

3. Software trigger
   a) write all REQ0.REQ0n = 0x0000 (by writing REQ0 the request pending register SW0CRP is updated by hardware; if no pending bit is active, then AP.SW0P is also cleared by hardware)
4. External event trigger
   a) write EXTC.ETCHn = 0x0000
   b) issue an external trigger via SCU/ERU/GPTA depending on the selected event trigger source
5. Timer
   a) write SCON.TRC = 1_B (clear timer run bit)
   b) write TTC.TTCHn = 0x0000 (clear all requests)
   c) write TCON.TRLD = 00000000000001_B (set reload value to minimum)
   d) write SCON.TRS = 1_B (set timer run bit)
   e) wait until TSTAT.TIMER = 0x0000

ADC_TC.054 Write access to CHIN-register

The register CHIN can be written byte-wise, especially bit 31 (CINREQ) will only be activated if the according byte is selected. This bit is also responsible for the setting of the corresponding arbitration participation bit AP.CHP.In case of a write access to CHIN with data-byte 3 disabled (e.g byte access to byte 0) and with data-bit 31 = 1 (bit can be 1 due to a previous data-bus transfer) then the bit CHIN.CINREQ remains unchanged, but bit AP.CHP will be erroneously set to 1. In this constellation unintended conversion starts can occur.

Additionally a write-access to register CHIN with a disabled data-byte 3 prevents that the hardware can change bit CHIN.CINREQ in case of start or cancel a conversion initiated by a CHIN request.

Workaround

CHIN must be written with a 4-byte access. A bit-set can be done for CHIN.CINREQ.

ADC_TC.055 Injection in cancel mode does not start conversion

The inject-trigger source in cancel-inject-repeat mode or a synchronous injection from a master-ADC in cancel mode requests a conversion of channel y by cancelling a running conversion of channel x.

If the digital part starts the injected conversion handling and the analog part is close to the end of the currently running conversion, a parameter mismatch between channels x and y occurs.

In this case the currently running conversion of channel x is finished but it is erroneously interpreted by the digital part as the end of the injected conversion of channel y.

- The conversion result of channel x is stored to register CHSTATy
- The interrupt related to the injected conversion of channel y is generated, caused by the end of conversion of channel x

Workarounds

Do not use the cancel-inject-repeat mode, neither for the injection trigger source nor for the synchronized injection.

ADC_TC.058 CHIN.CINREQ not reset in every case

If the fractional divider is configured for fractional divider mode or for normal divider mode with FDR.STEP < 1023 and the channel injection source requests an injected conversion then the flag CHIN.CINREQ is not reliably cleared when the injected conversion is started. An unintended conversion will not be started because the flag AP.CHP that is used for the arbitration is correctly cleared when an injected conversion is started.

Workarounds

- If a flag is needed to check the start of a channel injection then the flag AP.CHP instead of the flag CHIN.CINREQ should be used.
- Don´t use clock dividers > 1.

ADC_TC.059 Flags in MSS0 and MSS1 are not set after interrupt

If a conversion is finished then the configured channel- and source-interrupt will be generated. Additionally the corresponding flag in the MSS0- and MSS1-register will be set by hardware.

The flags in the registers MSS0 and MSS1 can only be reset by writing 1_B to the corresponding bit in these registers. If these two actions, the hardware-set and the software-reset of the same bit position, occur in the same module-cycle then the hardware-set will not be performed. Software has higher priority than hardware.

If these two actions, the hardware-set and the software-reset of **different** bit positions in the same register occur in the same module-cycle then the hardware-set will erroneously not be performed. As a result an interrupt is generated correctly, whereas the corresponding bit in the MSSx registers is not set.

Workarounds

- Do not reset MSSx-register-bits while a conversion is active.
- Avoid grouping of interrupt requests to the same service request node. (Use unique assignment of interrupt event to SRC-register)
- An SRC-register can be shared between an event that can be identified by MSS0 and another event that can be identified by MSS1. An event can be identified by MSS0 or MSS1 respectively, if only one bit position in each register is evaluated and cleared by software (only one event per MSSx-register).
  All other SRC-registers must be uniquely assigned to only one interrupt event and in the corresponding interrupt routine the MSSx registers have to be ignored and must not be cleared by software.

BCU_TC.003 OCDS debug problem during bus master change

The problem occurs under following condition:

- The granted master (DMA, LFI-Bridge or ON-Chip Debug System) changes while the System Peripheral Bus (SPB) is captured to the registers SBCU_DBGNTT, SBCU_DBADRT and SBCU_DBBOST. In this case the content

of the registers SBCU_DBGNTT, SBCU_DBADRT and SBCU_DBBOST is not reliable.

Workaround

None.

BCU_TC.004 RMW problem in conjunction with small timeout values

This problem affects the following peripherals at the DMA bus: DMA, FADC, SSC and ADC.

The problem occurs under following corner conditions:

- A timeout on the read part of a RMW access to one of the peripherals appears.
- The read part of this RMW was successfully performed just at this time.

The problem is, that the timeout is not ignored in this corner cases and the write part of the RMW is performed without protection mask. Therefore all bits will be written by the RMW and no write protection is effective.

Workaround

To avoid these timing corner cases the timeout limit of the bus has to be larger than the maximum response time of the peripherals including possible internal wait cycles. This leads to a timeout value of the BCU of a minimum of 6(SBCU_CON.TOUT >= 6) to cover all affected peripherals.

Below, the minimum allowed timeout values for each peripheral are specified separately.

SBCU_CON.TOUT >= 5 for FADC & SSC

SBCU_CON.TOUT >= 6 for ADC

SBCU_CON.TOUT >= 3 for DMA

CPU_TC.004 CPU can be halted by writing DBGSR with OCDS Disabled

Contrary to the specification, the TriCore1 CPU can be halted by writing "11" to the DBGSR.HALT bits, irrespective of whether On-Chip Debug Support (OCDS) is enabled or not (DBGSR.DE not checked).

Workaround

None.

CPU_TC.008 IOPC Trap taken for all un-acknowledged Co-processor instructions

When the TriCore1.3 CPU encounters a co-processor instruction, the instruction is routed to the co-processor interface where further decoding of the opcode is performed in the attached co-processors. If no co-processor acknowledges that this is a valid instruction, the CPU generates an illegal opcode (IOPC) trap.

Revisions of the TriCore Architecture Manual, up to and including V1.3.3, are unclear regarding whether Un-Implemented OPCode (UOPC) or Invalid OPCode (IOPC) traps should be taken for un-acknowledged co-processor instructions. However, the required behaviour is that instructions routed to a given co-processor, where the co-processor is present but does not understand the instruction opcode, should result in an IOPC trap. Co-processor instructions routed to a co-processor, where that co-processor is not present in the system, should result in a UOPC trap.

Consequently the TriCore1.3 implementation does not match the required behaviour in the case of un-implemented co-processors.

Workaround

Where software emulation of un-implemented co-processors is required, the IOPC trap handler must be written to perform the required functionality.

CPU_TC.012 Definition of PACK and UNPACK fail in certain corner cases

Revisions of the TriCore Architecture Manual, up to and including V1.3.3, do not consistently describe the behaviour of the PACK and UNPACK instructions. Specifically, the instruction definitions state that no special provision is made for handling IEEE-754 denormal numbers, infinities, NaNs or Overflow/Underflow situations for the PACK instruction. In fact, all these special cases are handled and will be documented correctly in further revisions of the TriCore Architecture Manual.

However, there are two situations where the current TriCore1.3 implementation is non-compliant with the updated definition, as follows:

1. Definition and detection of Infinity/NaN for PACK and UNPACK

In order to avoid Infinity/NaN encodings overlapping with arithmetic overflow situations, the special encoding of un-biased integer exponent = 255 and high order bit of the normalized mantissa (bit 30 for UNPACK, bit 31 for PACK) = 0 is defined.

In the case of Infinity or NaN, the TriCore1.3 implementation of UNPACK sets the un-biased integer exponent to +255, but sets the high order bit of the normalized mantissa (bit 30) to 1. In the case of PACK, input numbers with biased exponent of 255 and the high order bit of the normalized mantissa (bit 31) set are converted to Infinity/NaN. Unfortunately, small overflows may therefore be incorrectly detected as NaN by the PACK instruction special case logic and converted accordingly, when an overflow to Infinity should be detected.

2. Special Case Detection for PACK

In order to detect special cases, the exponent is checked for certain values. In the current TriCore1.3 implementation this is performed on the biased exponent, i.e. after 128 has been added to the un-biased exponent. In the case of very large overflows the addition of 128 to the un-biased exponent can cause the exponent itself to overflow and be interpreted as a negative number, i.e. underflow, causing the wrong result to be produced.

Workaround

The corner cases where the PACK instruction currently fails may be detected and the input number re-coded accordingly to produce the desired result.

CPU_TC.013 Unreliable context load/store operation following an address register load instruction

When an address register is being loaded by a load/store instruction LD.A/LD.DA and this address register is being used as address pointer in a following context load/store instruction LD*CX/ST*CX it may lead to unpredictable behavior.

Example

```
...
LD.A    A3, <any addressing mode>; load value into A3
LDLCX   [A3]    ; context load
...
```

Workaround

Insert one NOP instruction between the address register load/store instruction and the context load/store instruction to allow the "Load Word to Address Register" operation to be completed first.

```
...
LD.A  A3, <any addressing mode>
NOP
LDLCX [A3]
...
```

CPU_TC.014 Wrong rounding in 8000*8000<<1 case for certain MAC instructions

In the case of "round(acc +/- 8000_H * 8000_H << 1)" the multiplication and the following accumulation is carried out correctly. However, rounding is incorrect.

Rounding is done in two steps:

1. Adding of 0000 8000_H
2. Truncation

For the before mentioned case the first step during rounding (i.e. the adding operation) is suppressed - which is wrong - while truncation is carried out correctly.

This bug affects all variants of MADDR.Q, MADDR.H, MSUBR.Q, MSUBR.H., MADDSUR.H and MSUBADR.H instructions.

Workaround

None.

CPU_TC.046 FPI master livelock when accessing reserved areas of CSFR space

The Core Special Function Registers (CSFRs) associated with the TriCore1 CPU are accessible by any FPI bus master, other than the CPU, in the address range F7E1 0000_H - F7E1 $FFFF_H$. Any access to an address within this range which does not correspond to an existing CSFR within the CPU may result in the livelock of the initiating FPI master.

Accesses to the CPU CSFR space are performed via the CPU's slave interface (CPS) module, by any FPI bus master other than the CPU itself. In the case of such an access the CPS module initially issues a retry acknowledge to the FPI master then injects an instruction into the CPU pipeline to perform the CSFR access. The initial access is retry acknowledged to ensure the FPI bus is not blocked and instructions in the CPU pipeline are able to progress. The CPS module will continue to retry acknowledge further attempts by the FPI master to read the CSFR until the data is returned by the CPU.

In the case of an access to a reserved CSFR location the CPU treats the instruction injected by the CPS as a NOP and never acknowledges the CSFR access request. As such the CPS module continues to retry the CSFR access on the FPI bus, leading to the lockup of the initiating FPI master.

Workaround

Do not access reserved areas of the CPU CSFR space.

CPU_TC.048 CPU fetches program from unexpected address

There is a case which can cause the CPU to fetch program code from an unexpected address. Although this code will not be executed the program fetch itself can cause side effects (performance degradation, program fetch bus error trap).

If a load address register instruction LD.A/LD.DA is being followed immediately by an indirect jump JI, JLI or indirect call CALLI instruction with the same address register as parameter, the CPU might fetch program from an unexpected address.

Workaround

Insert a NOP instruction or any other load/store instruction between the load and the indirect jump/call instruction. (See also note "Pipeline Effects", below)

Example

```
...
LD.A    A14, <any addressing mode>
NOP                          ; workaround to prevent
                             ; program fetch from
                             ; undefined address
<one optional IP instruction>
CALLI   A14
...
```

Pipeline Effects

The CPU core architecture allows to decode and execute instructions for the integer pipeline (IP) and the load/store pipeline (LS) in parallel. Therefore this bug hits also if there is only (one) IP instruction after the offending LS instruction ("CALLI A14" in above example). A detailed list of IP instructions can be found in the document "TriCore DSP Optimization Guide - Part 1: Instruction Set, Chapter 13.1.3, Table of Dual Issue Instructions".

CPU_TC.053 PMI line buffer is not invalidated during CPU halt

Some debug tools provide the feature to modify the code during runtime in order to realize breakpoints. They exchange the instruction at the breakpoint address by a 'debug' instruction, so that the CPU goes into halt mode before it passes the instruction. Thereafter the debugger replaces the debug instruction by the original code again.

This feature no longer works reliably as the line buffer will not be invalidated during a CPU halt. Instead of the original instruction, the obsolete debug instruction will be executed again.

Workaround

Debuggers might use the following macro sequence:

1. set PC to other memory address (> 0x20h, which selects new cacheline-refill buffer)
2. execute at least one instruction (e.g. NOP) and stop execution again (e.g. via debug instruction)
3. set PC back to former debug position
4. proceed execution of user code

CPU_TC.059 Idle Mode Entry Restrictions

Two related problems exist which lead to unreliable idle mode entry, and possible data corruption, if the idle request is received whilst the TriCore CPU is in certain states. The two problems are as follows:

1. When the TriCore CPU receives an idle request, a DSYNC instruction is injected to flush any data currently held within the CPU to memory. If there is any outstanding context information to be saved, the clocks may be disabled too early, before the end of the context save. The CPU is then frozen in an erroneous state where it is instructing the DMI to make continuous write accesses onto the bus. Because of the pipelined architecture, the DMI may also see the wrong address for the spurious write accesses, and therefore memory data corruption can emerge. Another consequence of this is, that the DMI will not go to sleep and therefore the IDLE-state will not be fully entered.

2. If the idle request is asserted when a DSYNC instruction is already being executed by the TriCore CPU, the idle request may be masked prematurely and the idle request never acknowledged.

Workaround

The software workaround consists of ensuring that there is no unsaved context information within the CPU, and no DSYNC instruction in execution, when receiving an idle request. This precludes any attempt at sending the TriCore to sleep by third parties (i.e. Cerberus). The CPU can only be sent to idle mode by itself by executing the following code sequence:

```
...
DISABLE                    ; Disable Interrupts NOP
DSYNC                   ; Flush Buffers, background context
ISYNC                      ; Ensure DSYNC completes
<Store to SCU to assert idle request>
NOP                        ; Wait on idle request
NOP                        ; Wait on idle request
...
```

CPU_TC.060 LD.[A,DA] followed by a dependent LD.[DA,D,W] can produce unreliable results

An LD.A or LD.DA instruction followed back to back by an unaligned LD.DA, LD.D or LD.W instruction can lead to unreliable results. This problem is independent of the instruction formats (16 and 32 bit versions of both instructions are similarly affected)

The problem shows up if the LD.DA, LD.D or LD.W uses an address register which is loaded by the preceding LD.A or LD.DA and if the LD.DA, LD.D or LD.W accesses data which leads to a multicycle execution of this second instruction.

A multicycle execution of LD.DA, LD.D or LD.W will be triggered only if the accessed data spans a 128 bit boundary in the local DSPR space or a 128 bit boundary in the cached space. In the non cached space an access spanning a 64 bit boundary can lead to a multicycle execution.

The malfunction is additionally dependent on the previous content of the used address register - the bug appears if the content points to the unimplemented DSPR space.

In the buggy case the upper portion of the multicycle load is derived from a wrong address (the address is dependent on the previous content of that address register) and the buggy case leads to a one cycle FASTER execution of this back to back case. (one stall bubble is lacking in this case)

The 16 and 32 bit variants of both instructions are affected equally. A single IP instruction as workaround is NOT sufficient, as it gets dual issued with the LD.[DA,D,W] and therefore no bubble is seen by the LS pipeline in such a case.

Example:

```
...
LD.A    A3,<any addressing mode>; load pointer into A3
LD.W    D1,[A3]<any addressing mode>; load data value from
                                     ; pointer
...
```

Workaround

Insert one NOP instruction between the address register load/store instruction and the data load/store instruction to allow the "Load Word to Address Register" operation to be completed first. This leads to a slight performance degradation.

```
...
LD.A    A3, <any addressing mode>
NOP
LD.W    D1, [A3] <any addressing mode>
...
```

Alternative Workaround

To avoid the slight performance degradation, an alternative workaround is to avoid any data structures that are accessed in an unaligned manner as then the described instruction sequence does NOT exhibit any problems.

CPU_TC.062 Error in circular addressing mode for large buffer sizes

A problem exists in the circular addressing mode when large buffer sizes are used. Specifically, the problem exists when:

1. The length, L, of the circular buffer is >=32768 bytes, i.e. MSB of L is '1'

AND

2. The offset used to access the circular buffer is negative.

In this case the update of the circular buffer index may be calculated incorrectly and the addressing mode fail.

Each time an instruction using circular addressing mode occurs the next index for the circular buffer is calculated as current index + offset, where the signed offset is supplied as part of the instruction. In addition, the situation where the new index lies outside the bounds of the circular buffer has to be taken care of and the correct wrapping behaviour performed. In the case of negative offsets, the buffer underflow condition needs to be checked and, when detected, the buffer size is added to the index in order to implement the required wrapping.

Due to an error in the way the underflow condition is detected, there are cases where the buffer size is incorrectly added to the index when there is no buffer underflow. This false condition is detected when the index is greater than or equal to 32768 and the offset is negative.

Example:

```
...
MOVH.A A1, #0xE001          ;
LEA    A1, [A1]-0x4000      ; Buffer Length 0xE000,
                            ; Index 0xC000
LEA    A0, 0xA0000000       ; Buffer Base Address
LD.W   D9, [A0/A1+c]-0x4    ; Circular addressing
                            ; mode access,
                            ; negative offset
...
```

Workaround

Either limit the maximum buffer size for circular addressing mode to 32768 bytes, or use only positive offsets where larger circular buffers are required.

CPU_TC.063 Error in advanced overflow flag generation for SHAS instruction

A minor problem exists with the computation of the advanced overflow (AV) flag for the SHAS (Arithmetic Shift with Saturation) instruction. The TriCore1.3 architecture defines that for instructions supporting saturation, the advanced overflow flag shall be computed BEFORE saturation. The implementation of the SHAS instruction is incorrect with the AV flag computed after saturation.

Example:

```
...
MOVH    D0, #0x4800          ; D0 = 0x48000000
MOV.U   D1, #0x2             ; D1 = 0x2
SHAS    D2, D0, D1           ; Arithmetic Shift
                             ; with Saturation
...
```

In the above example, the result of 0x4800_0000 << 2 = 0x1_2000_0000, such that the expected value for AV = bit31 XOR bit30 = 0. However, after saturation the result is 0x7FFF_FFFF and the AV flag is incorrectly set.

Workaround

None

CPU_TC.064 Co-incident FCU and CDO traps can cause system-lock

A problem exists in the interaction between Free Context Underflow (FCU) and Call Depth Overflow (CDO) traps. An FCU trap occurs when a context save operation is attempted and the free context list is empty, or when the context operation encounters an error. A CDO trap occurs when a program attempts to make a call with call depth counting enabled and the call depth counter was already at its maximum value.

When an FCU trap occurs with call depth counting enabled (PSW.CDE = '1') and the call depth counter at a value such that the next call will generate a CDO trap, then the FCU trap causes a co-incident CDO trap. In this case the PC is

correctly set to the FCU trap handler but appears to freeze in this state as a constant stream of FCU traps is generated.

A related problem occurs when call trace mode is enabled (PSW.CDC = 0x7E). If in call trace mode a call or return operation encounters an FCU trap, either a CDO (call) or Call Depth Underflow (CDU, return) trap is generated co-incident with the FCU trap, either of which situations lead to a constant stream of FCU traps and system lockup.

Note however that FCU traps are not expected during normal operation since this trap is indicative of software errors.

Workaround

None

CPU_TC.065 Error when unconditional loop targets unconditional jump

An error in the program flow occurs when an unconditional loop (LOOPU) instruction has as its target an unconditional jump instruction, i.e. as the first instruction of the loop. Such unconditional jump instructions are J, JA, JI, JL, JLA and JLI.

In this erroneous case the first iteration of the loop executes correctly. However, at the point the second loop instruction is executed the interaction of the unconditional loop and jump instructions causes the loop instruction to be resolved as mis-predicted and the program flow exits the loop incorrectly, despite the loop instruction being unconditional.

Example:

```
...
loop_start_:          ; Loop start label
J jump_label_         ; Unconditional Jump instruction
...
LOOPU loop_start_
...
```

Workaround

The first instruction of a loop may not be an unconditional jump. If necessary, precede this jump instruction with a single NOP.

```
...
loop_start_:          ; Loop start label
NOP
J jump_label_         ; Unconditional Jump instruction
...
LOOPU loop_start_
...
```

CPU_TC.067 Incorrect operation of STLCX instruction

There is an error in the operation of the Store Lower Context (STLCX) instruction. This instruction stores the current lower context information to a 16-word memory block specified by the addressing mode associated with the instruction (not to the free context list). The architectural definition of the STLCX instruction is as follows:

Mem(EA, 16-word) = {PCXI, A[11], A[2:3], D[0:3], A[4:7], D[4:7]}

However, there is an error in the implementation of the instruction, such that the following operation is actually performed:

Mem(EA, 16-word) = {PCXI, **PSW**, A[2:3], D[0:3], A[4:7], D[4:7]}

i.e. the PSW is incorrectly stored instead of A11.

During normal operation, the lower context information that has been stored by an STLCX instruction would be re-loaded using the Load Lower Context (LDLCX) operation. The architectural definition of the LDLCX instruction is as follows:

{-, -, A[2:3], D[0:3], A[4:7], D[4:7]} = Mem(EA, 16-word)

i.e. the value which is incorrectly stored by STLCX is not re-loaded by LDLCX, such that the erroneous behaviour is not seen during normal operation.

However, any attempt to reload a lower context stored with STLCX using load instructions other than LDLCX will exhibit the incorrect behaviour.

Workaround

Any lower context stored using STLCX should only be re-loaded using LDLCX, otherwise the erroneous behaviour will be visible.

CPU_TC.068 Potential PSW corruption by cancelled DVINIT instructions

A problem exists in the implementation of the Divide Initialisation instructions, which, under certain circumstances, may lead to corruption of the advanced overflow (AV), overflow (V) and sticky overflow (SV) flags. These flags are stored in the Program Status Word (PSW) register, fields PSW.AV, PSW.V and PSW.SV. The divide initialisation instructions are DVINIT, DVINIT.U, DVINIT.B, DVINIT.BU, DVINIT.H and DVINIT.HU.

The problem is that the DVINIT class instructions do not handle the instruction cancellation signal correctly, such that cancelled DVINIT instructions still update the PSW fields. The PSW fields are updated according to the operands supplied to the cancelled DVINIT instruction. Due to the nature of the DVINIT instructions this can lead to:

- The AV flag may be negated erroneously.
- The V flag may be asserted or negated erroneously.
- The SV flag may be asserted erroneously.

No other fields of the PSW can be affected. A DVINIT class instruction could be cancelled due to a number of reasons:

- the DVINIT instruction is cancelled due to a mis-predicted branch
- the DVINIT instruction is cancelled due to an unresolved operand dependency
- the DVINIT instruction is cancelled due to an asynchronous event such as an interrupt

Workaround

If the executing program is using the PSW fields to detect overflow conditions, the correct behaviour of the DVINIT instructions may be guaranteed by avoiding the circumstances which could lead to a DVINIT instruction being cancelled. This requires that the DVINIT instruction is preceded by 2 NOPs (to avoid operand dependencies or the possibility of mis-predicted execution). In

addition, the status of the interrupt enable bit ICR.IE must be stored and interrupts disabled before the 2 NOPs and the DVINIT instruction are executed, and the status of the ICR.IE bit restored after the DVINIT instruction is complete.

Alternative Workaround

To avoid the requirement to disable and re-enable interrupts an alternative workaround is to precede the DVINIT instruction with 2 NOPs and to store the PSW.SV flag before a DVINIT instruction and check its consistency after the DVINIT instruction. In this case the values of the PSW flags affected may be incorrect whilst the asynchronous event is handled, but once the return from exception is complete and the DVINIT instruction re-executed, only the SV flag can be in error. In this case if the SV flag was previously negated but after the DVINIT instruction the SV flag is asserted and the V flag is negated, then the SV flag has been asserted erroneously and should be corrected by software.

CPU_TC.069 Potential incorrect operation of RSLCX instruction

A problem exists in the implementation of the RSLCX instruction, which, under certain circumstances, may lead to data corruption in the TriCore internal registers. The problem is caused by the RSLCX instruction incorrectly detecting a dependency to the following load-store (LS) or loop (LP) pipeline instruction, if that instruction uses either address register A0 or A1 as a source operand, and erroneous forwarding paths being enabled.

Two failure cases are possible:

1. If the instruction following the RSLCX instruction uses A1 as its source 1 operand, the PCX value updated by the RSLCX instruction will be corrupted. Instead of restoring the PCX value from the lower context information being restored, it will restore the return address (A11).
2. If the instruction following the RSLCX instruction uses either A1 or A0 as source 2 operand, the value forwarded (for the second instruction) will not be the one stored in the register but the one that has just been loaded from memory for the context restore (A11/PCX).

Note that the problem is triggered whenever the following load-store pipeline instruction uses A0 or A1 as a source operand. If an integer pipeline instruction is executed between the RSLCX and the following load-store or loop instruction, the problem may still exist.

Example:

```
...
RSLCX
LEA     A0, [A0]0x158c
...
```

Workaround

Any RSLCX instruction should be followed by a NOP to avoid the detection of these false dependencies.

CPU_TC.070 Error when conditional jump precedes loop instruction

An error in the program flow may occur when a conditional jump instruction is directly followed by a loop instruction (either conditional or unconditional). Both integer pipeline and load-store pipeline conditional jumps (i.e. those checking the values of data and address registers respectively) may cause the erroneous behaviour.

The incorrect behaviour occurs when the two instructions are not dual-issued, such that the conditional jump is in the execute stage of the pipeline and the loop instruction is at the decode stage. In this case, both the conditional jump instruction and the loop instruction will be resolved in the same cycle. The problem occurs because priority is given to the loop mis-prediction logic, despite the conditional jump instruction being semantically before the loop instruction in the program flow. In this error case the program flow continues as if the loop has exited: the PC is taken from the loop mis-prediction branch. In order for the erroneous behaviour to occur, the conditional jump must be incorrectly predicted as not taken. Since all conditional jump instructions, with the exception of 32-bit format forward jumps, are predicted as taken, only 32-bit forward jumps can cause the problem behaviour.

Example:

```
...
JNE.A   A1, A0, jump_target_1_ ; 32-bit forward jump
LOOP    A6, loop_target_1_
...
jump_target_1_:
...
```

Workaround

A conditional jump instruction may not be directly followed by a loop instruction (conditional or not). A NOP must be inserted between any load-store pipeline conditional jump (where the condition is dependent on an address register) and a loop instruction. Two NOPs must be inserted between any integer pipeline conditional jump (where the condition is dependent on a data register) and a loop instruction

CPU_TC.071 Error when Conditional Loop targets Unconditional Loop

An error in the program flow may occur when a conditional loop instruction (LOOP) has as its target an unconditional loop instruction (LOOPU). The incorrect behaviour occurs in certain circumstances when the two instructions are resolved in the same cycle. If the conditional loop instruction is mis-predicted, i.e. the conditional loop should be exited, the unconditional loop instruction is correctly cancelled but instead of program execution continuing at the first instruction after the conditional loop, the program flow is corrupted.

Example:

```
...
cond_loop_target_:
LOOPU   uncond_loop_target_   ; Unconditional loop
...
LOOP    A6, cond_loop_target_;Conditional loop targets
                              ;unconditional loop
...
```

Workaround

The first instruction of a conditional loop may not be an unconditional loop. If necessary, precede this unconditional loop instruction with a single NOP.

CPU_TC.072 Error when Loop Counter modified prior to Loop instruction

An error in the program flow may occur when an instruction that updates an address register is directly followed by a conditional loop instruction which uses that address register as its loop counter. The problem occurs when the address register holding the loop counter is initially zero, such that the loop will exit, but is written to a non-zero value by the instruction preceding the conditional loop. In this case the loop prediction logic fails and the program flow is corrupted.

Example:

```
...
LD.A    A6, <any addressing mode>
LOOP    A6, loop_target_1_
...
```

Workaround

Insert one NOP instruction between the instruction updating the address register and the conditional loop instruction dependent on this address register.

CPU_TC.073 Debug Events on Data Accesses to Segment E/F Non-functional

The generation of debug events from data accesses to addresses in Segments 0xE and 0xF is non-functional. As such the setting of breakpoints on data accesses to these addresses does not operate correctly.

In TriCore1 the memory protection system, consisting of the memory protection register sets and associated address comparators, is used both for memory protection and debug event generation for program and data accesses to specific addresses. For memory protection purposes, data accesses to the internal and external peripheral segments 0xE and 0xF bypass the range protection system and are protected instead by the I/O privilege level and

protection mechanisms built in to the individual peripherals. Unfortunately this bypass of the range protection system for segments 0xE and 0xF also affects debug event generation, masking debug events for data accesses to these segments.

Workaround

None.

CPU_TC.074 Interleaved LOOP/LOOPU instructions may cause GRWP Trap

If a conditional loop instruction (LOOP) is executed after an unconditional loop instruction (LOOPU) a Global Register Write Protection (GRWP) Trap may be generated, even if the LOOP instruction does not use a global address register as its loop counter.

In order to support zero-overhead loop execution the TriCore1 implementation caches certain attributes pertaining to loop instructions within the CPU. The TriCore1.3 CPU contains two loop cache buffers such that two loop (LOOP or LOOPU) instructions may be cached. One of the attributes cached is whether the loop instruction writes to a global address register (as its loop variable). For LOOP instructions this attribute is updated and read as expected. For LOOPU instructions this attribute is set but ignored by the LOOPU instruction when next encountered.

The problem occurs because there is only one global address register write flag shared between the two loop caches. As such if LOOP and LOOPU instructions are interleaved, with the LOOPU instruction encountered and cached after the LOOP instruction, then the next execution of the LOOP instruction will find the global address register write flag set and, if global register writes are disabled (`PSW.GW` = 0), a GRWP trap will be incorrectly generated.

Example:

```
...
loopu_target_
...
loop_target_
```

```
...
LOOP    A5, loop_target_
...
LOOPU   loopu_target_
...
```

Workaround

Enable global register write permission, PSW.GW = 1.

Tool Vendor Workaround

The LOOPU instruction sets the global address register write flag when its un-used opcode bits [15:12] are incorrectly decoded as global address register A0. The problem may be avoided by assembling these un-used bits to correspond to a non-global register encoding, such as 0xF.

CPU_TC.075 Interaction of CPS SFR and CSFR reads may cause livelock

Under certain specific circumstances system lockup may occur if the TriCore CPU attempts to access a Special Function Register (SFR) within the CPS module around the same time as another master attempts to read a Core Special Function Register (CSFR), also via the CPS module.

In order to read a CSFR the CPS module injects an instruction into the CPU pipeline to access the required register. In order for this injected instruction to complete successfully the CPU pipeline must be allowed to progress. To avoid system lockup the CSFR read access is initially retry acknowledged on the FPI bus to ensure the FPI bus is not blocked and any CPU read access to an address mapped to the FPI bus is able to progress. The CPS then continues the CSFR read in the background, and, once complete, returns the data to the originating master when the read access is performed again.

The problem occurs if the CPU is attempting to access an SFR accessed via the CPS module around the time another master is attempting a CSFR read access. Under normal circumstances this causes no problem since the SFR access is allowed to complete normally even with an outstanding CSFR access in the background. However, if the SFR access is pipelined on the FPI bus behind the

CSFR access and the CSFR access is still in progress then the interaction of the two pipelined transactions may cause the SFR access to be retry acknowledged in error. Thus the CPU pipeline is still frozen and the CSFR access cannot complete. As long as the two transactions, when re-initiated by their respective masters, continue to be pipelined on the FPI bus then this livelock situation will continue.

Note however that the only FPI master expected to access the CSFR address range via the CPS would be the Cerberus module under control of an external debugger. As such this livelock situation should only be possible whilst debugging, not during normal system operation.

Workaround

None.

CPU_TC.078 Possible incorrect overflow flag for an MSUB.Q and an MADD.Q instruction

Under certain conditions, a variant of the MSUB.Q instruction and a variant of the MADD.Q instruction can fail and produce an incorrect overflow flag, PSW.V, and hence an incorrect PSW.SV. When the problem behaviour occurs, the overflow flag is always generated incorrectly: if PSW.V should be set it will be cleared, and if it should be cleared it will be set.

The problem affects the following two instructions:

MSUB.Q D[c], D[d], D[a], D[b] L, n; opcode[23:18]=01_H, opcode[7:0]=63_H

MADD.Q D[c], D[d], D[a], D[b] L, n; opcode[23:18]=01_H, opcode[7:0]=43_H

The error conditions are as follows:

If (Da[31:16] = 16’h8000) and (DbL = 16’h8000) and (n=1), then PSW.V will be incorrect.

Workaround #1

If the PSW.V and PSW.SV flags generated by these instructions are not used by the code, then the instructions can be used without a workaround.

Workaround #2

This workaround utilizes the equivalent MSUB.Q or MADD.Q instruction that uses the upper half of register D[b]. However there is also an erratum on these instructions (CPU_TC.099), so this workaround takes this into account.

The workaround provides the same result and PSW flags as the original instruction, however it may require an unused data register to be available.

```
MADD.Q D4, D2, D0, D1 L, #1
```

Using just this workaround becomes

```
SH     D7, D1, #16    ; Shift to upper halfword
MADD.Q D4, D2, D0, D7 U, #1
```

combining this workaround with the workaround for CPU_TC.099:

```
SH     D7, D1, #16    ; Shift to upper halfword

MUL.Q  D4, D0, D7 U, #0
JNZ.T  D4, 31, no_bug
JZ.T   D4, 30, no_bug
mac_erratum_condition:
MOVH   D4, #0x8000    ; 0x8000_0000
SUB    D4, D2, D4     ; SUB-1=ADD+1, set V/AV, not C
J      mac_complete
no_bug:
MADD.Q  D4, D2, D0, D7 U, #1
mac_complete:
```

CPU_TC.079 Possible invalid ICR.PIPN when no interrupt pending

Under certain circumstances the Pending Interrupt Priority Number, ICR.PIPN, may be invalid when there is no interrupt currently pending. When no interrupt is pending the ICR.PIPN field is required to be zero.

There are two circumstances where ICR.PIPN may have a non-zero value when no interrupt is pending:

1. When operating in 2:1 mode between CPU and interrupt bus clocks, the ICR.PIPN field may not be reset to zero when an interrupt is acknowledged by the CPU.
2. During the interrupt arbitration process the ICR.PIPN is constructed in 1-4 arbitration rounds where 2 bits of the PIPN are acquired each round. The intermediate PIPN being used to construct the full PIPN is made available as ICR.PIPN. This is a potential problem because reading the PIPN can indicate a pending interrupt that is not actually pending and may not even be valid. e.g. if interrupt 0x81 is the highest priority pending interrupt, then ICR.PIPN will be read as 0x80 during interrupt arbitration rounds 2,3 and 4. Only when the arbitration has completed will the valid PIPN be reflected in ICR.PIPN.

The hardware implementation of the interrupt system for the TriCore1 CPU actually comprises both the PIPN and a separate, non-architecturally visible, interrupt request flag. The CPU only considers PIPN when the interrupt request flag is asserted, at which times the ICR.PIPN will always hold a valid value. As such the hardware implementation of the interrupt priority scheme functions as expected. However, reads of the ICR.PIPN field by software may encounter invalid information and should not be used.

Workaround

None.

CPU_TC.080 No overflow detected by DVINIT instruction for MAX_NEG / -1

A problem exists in variants of the Divide Initialisation instruction with certain corner case operands. Only those instruction variants operating on signed operands, DVINIT, DVINIT.H and DVINIT.B, are affected. The problem occurs when the maximum representable negative value of a number format is divided by -1.

The Divide Initialisation instructions are required to initialise an integer division sequence and detect corner case operands which would lead to an incorrect final result (e.g. division by 0), setting the overflow flag, PSW.V, accordingly.

In the specific case of division of the maximum negative 32-bit signed integer (0x80000000) by -1 (0xFFFFFFFF), the result is greater than the maximum representable positive 32-bit signed integer and should flag overflow. However, this specific case is not detected by the DVINIT instruction and a subsequent division sequence returns the maximum negative number as a result with no corresponding overflow flag.

In the cases of division of the maximum negative 16/8-bit signed integers (0x8000/0x80) by -1 (0xFFFF/0xFF), the result is greater than the maximum representable positive 16/8-bit signed integer and should again flag overflow. These specific cases are not detected by the DVINIT.H/.B instructions with no corresponding overflow flag set. In this case the result of a subsequent division sequence returns the value 0x00008000/0x00000080 which is the correct value when viewed as a 32-bit number but has overflowed the original number format.

Workaround

If the executing program is using the PSW fields to detect overflow conditions, the specific corner case operands described above must be checked for and handled as a special case in software before the standard division sequence is executed.

CPU_TC.081 Error during Load A[10], Call / Exception Sequence

A problem may occur when an address register load instruction, LD.A or LD.DA, targeting the A[10] register, is immediately followed by an operation causing a context switch. The problem may occur in one of two situations:

1. The address register load instruction, targeting A[10], is followed immediately by a call instruction (CALL, CALLA, CALLI).
2. The address register load instruction, targeting A[10], is followed immediately by a context switch caused by an interrupt or trap being taken, where the interrupt stack is already in use (PSW.IS = 1).

In both these situations the value of A[10] is required to be maintained across the context switch. However, where the context switch is preceded by a load to A[10], the address register dependency is not detected correctly and the called

context inherits the wrong value of A[10]. In this case the value of A[10] before the load instruction is inherited.

Example:

```
...
LD.A    A10, <any addressing mode>
CALL    call_target_
...
```

Workaround

The problem only occurs when A[10] is loaded directly from memory. The software workaround therefore consists of loading another address register from memory and moving the contents to A[10].

Example:

```
...
LD.A    A12, <any addressing mode>
MOV.AA A10, A12
CALL    call_target_
...
```

CPU_TC.082 Data corruption possible when Memory Load follows Context Store

Data corruption may occur when a context store operation, STUCX or STLCX, is immediately followed by a memory load operation which reads from the last double-word address written by the context store.

Context store operations store a complete upper or lower context to a 16-word region of memory, aligned on a 16-word boundary. If the context store is immediately followed by a memory load operation which reads from the last double-word of the 16-word context region just written, the dependency is not detected correctly and the previous value held in this memory location may be returned by the memory load.

The memory load instructions which may return corrupt data are as follows:

ld.b, ld.bu, ld.h, ld.hu, ld.q, ld.w, ld.d, ld.a, ld.da

Example:

```
...
STLCX   0xD0000040
LD.W    D15, 0xD0000078
...
```

Note that the TriCore architecture does not require a context save operation (CALL, SVLCX, etc.) to update the CSA list semantically before the next operation (but does require the CSA list to be up to date after the execution of a DSYNC instruction). As such the same problem may occur for context save operations, but the result of such a sequence is architecturally undefined in any case.

Workaround

One NOP instruction must be inserted between the context store operation and a following memory load instruction if the memory load may read from the last double-word of the 16-word context region just written.

Example:

```
...
STLCX   0xD0000040
NOP
LD.W    D15, 0xD0000078
...
```

CPU_TC.083 Interrupt may be taken following DISABLE instruction

The TriCore V1.3 architecture requires that the DISABLE instruction gives deterministic behaviour, i.e. no interrupt may be taken following the execution of the DISABLE instruction.

However, the current implementation allows an interrupt to be taken immediately following the execution of the DISABLE instruction, i.e. between the DISABLE and the following instruction. Once the first instruction after the DISABLE instruction has been executed its is still guaranteed that no interrupt will be taken.

Workaround

If an instruction sequence must not be interrupted, then the DISABLE instruction must be followed by a single NOP instruction, before the critical code sequence.

CPU_TC.084 CPS module may error acknowledge valid read transactions

A bug exists in the CPS module, which may result in the CPS incorrectly returning an error acknowledge for a read access to a valid CPS address.

The problem occurs when a read access to a CPS address, in the range 0xF7E00000 - 0xF7E1FFFF, is followed immediately on the FPI bus by a User mode write access to an address with FPI address[16] = 1. The problem occurs due to an error in the FPI bus decoding within the CPS which incorrectly interprets the second transaction, even if to another slave, as an illegal User mode write to a TriCore `CSFR` and incorrectly error acknowledges the valid read. Write accesses to the CPS module are not affected.

Tool Vendor Workaround

For devices in which only the TriCore CPU and Debug Interface (Cerberus) may operate in User mode, the workaround consists of 2 parts:

1. The Cerberus module must be configured to operate in Supervisor mode, thus avoiding the TriCore CPU from receiving false error acknowledges.
2. If the Cerberus FPI Master receives an error acknowledge it enters error state, which is detected by the debugger as a timeout. In this case the debugger should release the Cerberus from the error state with the io_supervisor command and read out the cause of the error. Where an error acknowledge is determined to be the cause for a read in the CPS address range the read request should be re-issued.

CPU_TC.086 Incorrect Handling of `PSW.CDE` for CDU trap generation

An error exists in the CDU (Call Depth Underflow) trap generation logic. CDU traps are architecturally defined to occur when "A program attempted to execute a RET (Return) instruction while Call Depth Counting was enabled, and

the Call Depth Counter was zero". Call depth counting is enabled when PSW.CDC /= 1111111 and PSW.CDE = 1. However, the status of PSW.CDE is currently not considered for CDU trap generation, and CDU traps may be generated when PSW.CDE = 0.

Call depth counting, and generation of the associated CDO and CDU traps, may be disabled by one of two methods. Setting PSW.CDC = 1111111 globally disables call depth counting and operates as specified. Setting PSW.CDE = 0 temporarily disables call depth counting (it is re-enabled by each call instruction) and is used primarily for call/return tracing.

Workaround

In order to temporarily disable call depth counting for a single return instruction, PSW.CDC should be set to 1111111 before the return instruction is executed.

CPU_TC.087 Exception Prioritisation Incorrect

The TriCore architecture defines an exception priority order, consisting of the relative priorities of asynchronous traps, synchronous traps and interrupts, and the prioritisation of individual trap types.

The current implementation of the TriCore1.3 CPU complies with the general principle that the older the instruction is in the instruction sequence which caused the trap, the higher the priority of the trap. However, the relative prioritisation of asynchronous and synchronous events and the prioritisation between individual trap types does not fully comply with the architectural definition.

The current TriCore1.3 CPU implements the following priority order between an asynchronous trap, a synchronous trap, and an interrupt:

1. Synchronous traps detected in Execute pipeline stage (highest priority).
2. Asynchronous trap.
3. Interrupt.
4. Synchronous trap detected in Decode pipeline stage (lowest priority).

Within these groups the following priorities are implemented:

Table 8 Synchronous Trap Priorities (Detected in Execute Stage)

Priority	Type of Trap
1	VAF-D
2	VAP-D
3	MPR
4	MPW
5	MPP
6	MPN
7	ALN
8	MEM
9	DSE
10	OVF
11	SOVF
12	Breakpoint Trap (BAM)

Table 9 Asynchronous Trap Priorities

Priority	Type of Trap
1	NMI
2	DAE

Table 10 Synchronous Trap Priorities (Detected in Decode Stage)

Priority	Type of Trap
1	FCD
2	VAF-P
3	VAP-P
4	PSE
5	Breakpoint Trap (Virtual Address, BBM)
6	Breakpoint Trap (Instruction, BBM)
7	PRIV

Table 10 Synchronous Trap Priorities (Detected in Decode Stage)

Priority	Type of Trap
8	MPX
9	GRWP
10	IOPC
11	UOPC
12	CDO
13	CDU
14	FCU
15	CSU
16	CTYP
17	NEST
18	SYSCALL

Although the implemented trap priorities do not match those defined by the TriCore architecture, this does not cause any problem in the majority of circumstances. The only circumstance in which the incorrect priority order must be considered is in the individual trap handlers, which should not be written to be dependent on the architecturally defined priority order. For instance, according to the architectural definition, a PSE trap handler could assume that any PSE trap received was as a result of a program fetch access from a memory region authorised by the memory protection system. However, as a result of the implemented priorities of PSE and MPX traps, this assumption cannot be made.

Workaround

Trap handlers must be written to take account of the implemented priority and not rely upon the architecturally defined priority order.

CPU_TC.088 Imprecise Return Address for FCU Trap

The FCU trap is taken when a context save operation is attempted but the free context list is found to be empty, or when an error is encountered during a

context save or restore operation. In failing to complete the context operation, architectural state is lost, so the occurrence of an FCU trap is a non-recoverable system error.

Since FCU traps are non-recoverable system errors, having a precise return address is not important, but can be useful in establishing the cause of the FCU trap. The current TriCore1 implementation does not generate a precise return address for FCU traps in all circumstances.

An FCU trap may be generated as a result of 3 situations:

1. An instruction caused a context operation explicitly (CALL, RET etc.), which failed. The FCU return address should point to the instruction which caused the context operation.
2. An instruction caused a synchronous trap, which attempted to save context and encountered an error. The FCU return address should point to the original instruction which caused the synchronous trap.
3. An asynchronous trap or interrupt occurred, which attempted to save context and encountered an error. The FCU return address should point to the next instruction to be executed following a return from the asynchronous event.

In each of these circumstances the return address generated by the current TriCore1 implementation may be up to 8 bytes greater than that intended.

Workaround

None

CPU_TC.089 Interrupt Enable status lost when taking Breakpoint Trap

The Breakpoint Trap allows entry to a Debug Monitor without using user resources, irrespective of whether interrupts are enabled or not.

According to the current TriCore1.3 architecture definition, the actions pertaining to the `ICR.IE` bit upon taking a breakpoint trap are:

- Write PCXI to DCX + 0_H.
- `ICR.IE` = 0_H.

Upon returning from a breakpoint trap, the corresponding action taken is:

- Restore PCXI from DCX + 0_H.

Unfortunately, during such a breakpoint trap, return from monitor sequence the original status of the interrupt enable bit, ICR.IE, is lost. ICR.IE is cleared to disable interrupts by the breakpoint trap, but the previous value of ICR.IE is not stored. The desired behaviour is to store ICR.IE to PCXI.PIE on taking a breakpoint trap, and restore it upon return from the debug monitor. The current TriCore1.3 implementation matches the current architecture definition whereby the interrupt enable status is lost on taking a breakpoint trap.

Workaround

If breakpoint traps are used in conjunction with code where the original status of the ICR.IE bit is known, then the debug monitor may set ICR.IE to the desired value before executing the return from monitor.

If the original status of ICR.IE is not known and cannot be predicted, an alternative debug method must be used, such as an external debugger or breakpoint interrupts.

CPU_TC.094 Potential Performance Loss when CSA Instruction follows IP Jump

The TriCore1 CPU contains shadow registers for the upper context registers, to optimise the latency of certain CSA list operations. As such, the latency of instructions operating on the CSA list is variable dependent on the state of the context system. For instance, a return instruction will take fewer cycles when the previous upper context is held in the shadow registers than when the shadow registers are empty and the upper context has to be re-loaded from memory.

In situations where the CSA list is located in single cycle access memory (i.e. Data Scratchpad RAM), instructions operating on the upper context (such as call, return) will have a latency of between 2 and 5 cycles, dependent on the state of the context system. In the case where the CSA list instruction will take 4 or 5 cycles, the instruction will cause the instruction fetch request to be negated whilst the initial accesses of the context operation complete.

A performance problem exists when certain jump instructions which are executed by the integer pipeline are followed immediately by certain CSA list instructions, such that the instructions are dual-issued. In this case, where the jump instruction is predicted taken, the effect of the CSA list instruction on the fetch request is not immediately cancelled, which can lead to the jump instruction taking 2 cycles longer than expected. This effect is especially noticeable where the jump instruction is used to implement a short loop, since the loop may take 2 cycles more than expected. In addition, since the state of the context system may be modified by asynchronous events such as interrupts, the execution time of the loop before and after an interrupt is taken may be different.

Integer pipeline jump instructions are those that operate on data register values as follows:

JEQ, JGE, JGE.U, JGEZ, JGTZ, JLEZ, JLT, JLT.U, JLTZ, JNE, JNED, JNEI, JNZ, JNZ.T, JZ, JZ.T

CSA list instructions which may cause the performance loss are as follows:

CALL, CALLA, CALLI, SYSCALL, RET, RFE

Workaround

In order to avoid any performance loss, in particular where the IP jump instruction is used to implement a loop and as such is taken multiple times, a NOP instruction should be inserted between the IP jump and the CSA list instruction.

Example:

```
...
JLT.U   D[a], D[b], jump_target_
NOP
RET
...
```

CPU_TC.095 Incorrect Forwarding in SAT, Mixed Register Instruction Sequence

In a small number of very specific instruction sequences, involving Load-Store (LS) pipeline instructions with data general purpose register (DGPR) operands, the operand forwarding in the TriCore1 CPU may fail and the data dependency between two instructions be missed, leading to incorrect operation. The problem may occur in one of two instruction sequences as follows:

Problem Sequence 1)

1. LS instruction with DGPR destination {mov.d, eq.a, ne.a, lt.a, ge.a, eqz.a, nez.a, mfcr}
2. SAT.H instruction
3. LS instruction with DGPR source {addsc.a, addsc.at, mov.a, mtcr}

If the DGPR source register of (3) is equal to the DGPR destination register of (1), then the interaction with the SAT.H instruction may cause the dependency to be missed and the original DGPR value to be passed to (3).

Problem Sequence 2)

1. Load instruction with 64-bit DGPR destination {ld.d, ldlcx, lducx, rslcx, rfe, rfm, ret}
2. SAT.B or SAT.H instruction
3. LS instruction with DGPR source {addsc.a, addsc.at, mov.a, mtcr}

In this case if the DGPR source register of (3) is equal to the high 32-bit DGPR destination register of (1), then the interaction with the SAT.B/SAT.H instruction may cause the dependency to be missed and the original DGPR value to be passed to (3).

Example:

```
...
MOV.D   D2, A12
SAT.H   D7
MOV.A   A4, D2
...
```

Note that for the second problem sequence the first instruction of the sequence could be RFE and as such occur asynchronous with respect to the program flow.

Workaround

A single NOP instruction must be inserted between any SAT.B/SAT.H instruction and a following Load-Store instruction with a DGPR source operand {addsc.a, addsc.at, mov.a, mtcr}.

CPU_TC.096 Error when Conditional Loop targets Single Issue Group Loop

An error in the program flow may occur when a conditional loop instruction (LOOP) has as its target an instruction which forms part of a single issue group loop. Single issue group loops consist of an optional Integer Pipeline (IP) instruction, optional Load-Store Pipeline (LS) instruction and a loop instruction targeting the first instruction of the group. In order for the problem to occur the outer loop must first be cancelled (for instance due to a pipeline hazard) before being executed normally. When the problem occurs the loop counter of the outer loop instruction is not decremented correctly and the loop executed an incorrect number of times.

Example:

```
...
loop_target_:
ADD    D2, D1          ; Optional IP instruction
ADD.A  A2, A1          : Optional LS instruction
LOOP   Ax, loop_target_; Single Issue Group Loop
...
LD.A   Am, <addressing mode>
LD.W   Dx, [Am]        ; Address dependency causes cancel
LOOP   Ay, loop_target_; Conditional loop targets
                       ; single issue group loop
...
```

Workaround

Single issue group loops should not be used. Where a single issue group loop consists of an IP instruction and a loop instruction targeting the IP instruction, two NOPs must be inserted between the IP and loop instructions. Where a single issue group loop consists of an optional IP instruction, a single LS instruction and a loop instruction targeting the first instruction of this group, a single NOP must be inserted between the LS instruction and the loop instruction. Since single issue group loops do not operate optimally on the current TriCore1 implementation (not zero overhead), no loss of performance is incurred.

CPU_TC.097 Overflow wrong for some Rounding Packed Multiply-Add instructions.

An error is made in the computation of the overflow flag (PSW.V) for some of the rounding packed multiply-accumulate (Mac) instructions. The error affects the following instructions with a 64bit accumulater input:

MADDR.H D[c], E[d], D[a], D[b] UL, n; opcode[23:18]=$1E_H$, opcode[7:0]=43_H

MSUBR.H D[c], E[d], D[a], D[b] UL, n; opcode[23:18]=$1E_H$, opcode[7:0]=63_H

PSW.V is computed by combining ov_halfword1 and ov_halfword0, as described in the TriCore architecture manual (V1.3.6) for these instructions. When the error conditions exist ov_halfword1 is incorrectly computed. ov_halfword0 is always computed correctly.

Note: Under the error conditions, PSW.V may be correct depending on the value of ov_halfword0.

The specific error conditions are complex and are not described here.

Workaround #1

If the PSW.V and PSW.SV flags generated by these instructions are not used by the code, then the instructions can be used without a workaround.

Workaround #2

If the algorithm allows use of 16 bit addition inputs, the code could be rewritten to use the following instructions instead:

MADDR.H D[c], **D**[d], D[a], D[b] UL, n; opcode[23:18]=$0C_H$, opcode[7:0]=83_H

MSUBR.H D[c], **D**[d], D[a], D[b] UL, n; opcode[23:18]=$0C_H$, opcode[7:0]=$A3_H$

Workaround #3

If the PSW.V and PSW.SV flags are used, and 32 bit addition inputs are required, then the routine should be rewritten to use two unpacked mac instructions. I.e.

```
MADDR.H     D4, E2, D0, D1 UL, #n
```

Becomes

```
MADDR.Q     D4, D3, D0 U, D1 U, #n
MADDR.Q     D5, D2, D0 L, D1 L, #n
SH          D5, D5, #-16
INSERT      D4, D4, D5, #16, #16; Repack into D4
```

Note: PSW.V must be tested between the two MADDR.Q instructions if PSW.SV cannot be utilised.

Note: This algorithm requires an additional register (D5 in the example).

Workaround #3 for erroneous MSUBR.H instruction is similar to the MADDR.H instruction.

CPU_TC.098 Possible PSW.V Error for an MSUB.Q instruction variant when both multiplier inputs are of the form 0x8000xxxx

The bug only affects the following instruction

MSUB.Q D[c], D[d], D[a], D[b] , n; opcode[23:18]=02_H, opcode[7:0]=63_H

PSW.V is computed by the algorithm in the TriCore Architecture Manual for this instruction except under the following conditions:

(D[a][31:16] = 16'h8000) &&

(D[b][31:16] = 16'h8000) &&

(n = 1)

When these conditions are met the following algorithm is used to produce the incorrect PSW.V

```
if expected (PSW.V) = 1     // expected to overflow
   PSW.V = 0
 else                       // not expected to overflow
   if (result < 0) and (D[d] >= 0)
     PSW.V = 1
   else
     PSW.V = 0
   endif
 endif
```

Workaround #1

If the PSW.V and PSW.SV flags generated by this instruction are not used by the code, then the instruction can be used without a workaround.

Workaround #2

Use the equivalent instruction which produces a 64 bit result.

MSUB.Q E[c], E[d], D[a], D[b] , n; opcode[23:18]=$1B_H$, opcode[7:0]=63_H

To use the 64 bit version, D[d] should occupy the odd word of E[d], the even word of E[d] should be set to zero. The result will appear in the odd word of E[c].

Note: This version of the MSUB.Q instruction is affected by another erratum CPU_TC.099. Please ensure that the workaround for that erratum is implemented.

This workaround provides the same result and PSW flags as the original instruction, however it requires additional unused data registers to be available.

CPU_TC.099 Saturated Result and PSW.V can error for some q format multiply-accumulate instructions when computing multiplications of the type 0x80000000*0x8000 when n=1

For some q format multiply-accumulate instructions, the overflow flag (PSW.V) is computed incorrectly under some circumstances. When the problem behaviour occurs, the overflow flag is always generated incorrectly: if PSW.V should be set it will be cleared, and if it should be cleared it will be set.

Where this bug affects a saturating instruction the result is incorrectly saturated.

This bug affects the following instructions:

32bit * 32bit Instructions

MUL.Q D[c], D[a], D[b], n; opcode[23:18]=02_H, opcode[7:0]=93_H

MUL.Q E[c], D[a], D[b], n; opcode[23:18]=$1B_H$, opcode[7:0]=93_H

MADD.Q D[c], D[d], D[a], D[b], n; opcode[23:18]=02_H, opcode[7:0]=43_H

MADD.Q E[c], E[d], D[a], D[b], n; opcode[23:18]=$1B_H$, opcode[7:0]=43_H

MSUB.Q E[c], E[d], D[a], D[b], n; opcode[23:18]=$1B_H$, opcode[7:0]=63_H

32bit * 16bit (Upper) Instructions

MUL.Q D[c], D[a], D[b] U, n; opcode[23:18]=00_H, opcode[7:0]=93_H

MADD.Q D[c], D[d], D[a], D[b] U, n; opcode[23:18]=00_H, opcode[7:0]=43_H

MADDS.Q D[c], D[d], D[a], D[b] U, n; opcode[23:18]=20_H, opcode[7:0]=43_H

MSUB.Q D[c], D[d], D[a], D[b] U, n; opcode[23:18]=00_H, opcode[7:0]=63_H

MSUBS.Q D[c], D[d], D[a], D[b] U, n; opcode[23:18]=20_H, opcode[7:0]=63_H

32bit * 16bit (Lower) Instructions

MUL.Q D[c], D[a], D[b] L, n; opcode[23:18]=01_H, opcode[7:0]=93_H

MADDS.Q D[c], D[d], D[a], D[b] L, n; opcode[23:18]=21_H, opcode[7:0]=43_H

MSUBS.Q D[c], D[d], D[a], D[b] L, n; opcode[23:18]=21_H, opcode[7:0]=63_H

The error condition occurs, and hence PSW.V is inverted under the following conditions:

32bit * 32bit Instructions
D[a] = 32'h8000_0000 and
D[b] = 32'h8000_0000 and
n = 1

32bit * 16bit (Upper) Instructions
D[a] = 32'h8000_0000 and
D[b][31:16] = 16'h8000 and
n = 1

32bit * 16bit (Lower) Instructions
D[a] = 32'h8000_0000 and
D[b][15:0] = 16'h8000 and
n = 1

When the error condition occurs for a saturating instruction, the result is wrong in addition to PSW.V. The result in these cases is as follows:

MADDS.Q, PSW.V incorrectly asserted
32 bit result: D[c] = 32'h8000_0000

MADDS.Q, PSW.V incorrectly negated
32 bit result: D[c] = result[31:0]

MSUBS.Q, PSW.V incorrectly asserted
32 bit result: D[c] = 32'h7FFF_FFFF

MSUBS.Q, PSW.V incorrectly negated
32 bit result: D[c] = result[31:0]

Workaround #1

For instructions which don't saturate, if the PSW.V and PSW.SV flags generated by the instruction are not used by the code, then the instruction can be used without a workaround.

Workaround #2

Prior to executing the erroneous instruction, test the operands to detect the error condition. If the error condition exists, execute an alternative routine. Detecting the error condition is performed by executing a MUL.Q on the multiplicands with n=0, then testing bit 30 of the result which is only set when the error condition operands exist.

Each erroneous instruction can be replaced by the relevant code sequence described below.

Note: If the destination register is the same as one of the source registers, then an additional data register will be needed to implement the workaround.

MUL.Q D[c], D[a], D[b], #1; opcode[23:18]=02_H, opcode[7:0]=93_H

```
  MUL.Q    D4, D0, D1, #1
```

becomes

```
  MUL.Q    D4, D0, D1, #0
  JNZ.T    D4, 31, no_bug
  JZ.T     D4, 30, no_bug
mac_erratum_condition:
  MOVH     D4, #0x4000 ; 0x4000_0000
  ADD      D4, D4, D4  ; 0x8000_0000, set V/AV, leave C
  J        mac_complete
no_bug:
  MUL.Q    D4, D0, D1, #1
mac_complete:
```

MUL.Q E[c], D[a], D[b], #1; opcode[23:18]=$1B_H$, opcode[7:0]=93_H

```
  MUL.Q    E4, D0, D1, #1
```

becomes

```
  MUL.Q    E4, D0, D1, #0
```

```
  JNZ.T   D5, 31, no_bug
  JZ.T    D5, 30, no_bug
mac_erratum_condition:
  MOV     D4, #0
  MOVH    D5, #0x4000 ; 0x4000_0000
  ADD     D5, D5, D5  ; 0x8000_0000, set V/AV, leave C
  J       mac_complete
no_bug:
  MUL.Q   E4, D0, D1, #1
mac_complete:
```

MUL.Q D[c], D[a], D[b] U, #1; opcode[23:18]=00_H, opcode[7:0]=93_H

```
  MUL.Q   D4, D0, D1 U, #1
```

becomes

```
  MUL.Q   D4, D0, D1 U, #0
  JNZ.T   D4, 31, no_bug
  JZ.T    D4, 30, no_bug
mac_erratum_condition:
  MOVH    D4, #0x4000 ; 0x4000_0000
  ADD     D4, D4, D4  ; 0x8000_0000, set V/AV, leave C
  J       mac_complete
no_bug:
  MUL.Q   D4, D0, D1 U, #1
mac_complete:
```

MUL.Q D[c], D[a], D[b] L, #1; opcode[23:18]=01_H, opcode[7:0]=93_H

```
  MUL.Q   D4, D0, D1 L, #1
```

becomes

```
  MUL.Q   D4, D0, D1 L, #0
  JNZ.T   D4, 31, no_bug
  JZ.T    D4, 30, no_bug
mac_erratum_condition:
  MOVH    D4, #4000   ; 0x4000_0000
  ADD     D4, D4, D4  ; 0x8000_0000 set V/AV, leave C
```

```
  J       mac_complete
no_bug:
  MUL.Q   D4, D0, D1 L, #1
mac_complete:
```

MADD.Q D[c], D[d], D[a], D[b], #1; opcode[23:18]=02_H, opcode[7:0]=43_H

```
  MADD.Q  D4, D2, D0, D1 #1
```

becomes

```
  MUL.Q   D4, D0, D1, #0
  JNZ.T   D4, 31, no_bug
  JZ.T    D4, 30, no_bug
mac_erratum_condition:
  MOVH    D4, #0x8000 ; 0x8000_0000
  SUB     D4, D2, D4  ; SUB-1=ADD+1, set V/AV, leave C
  J       mac_complete
no_bug:
  MADD.Q  D4, D2, D0, D1, #1
mac_complete:
```

MADD.Q E[c], E[d], D[a], D[b], #1; opcode[23:18]=$1B_H$, opcode[7:0]=43_H

```
  MADD.Q  E4, E2, D0, D1 #1
```

becomes

```
  MUL.Q   D4, D0, D1, #0
  JNZ.T   D4, 31, no_bug
  JZ.T    D4, 30, no_bug
mac_erratum_condition:
  MOV     D4, D2      ; lower word add 0
  MOVH    D5, #0x8000 ; 0x8000_0000
  SUB     D5, D3, D5  ; SUB-1=ADD+1, set V/AV, leave C
  J       mac_complete
no_bug:
  MADD.Q  E4, E2, D0, D1, #1
mac_complete:
```

MADD.Q D[c], D[d], D[a], D[b] U, #1; opcode[23:18]=00_H, opcode[7:0]=43_H

```
  MADD.Q  D4, D2, D0, D1 U, #1
```

becomes

```
  MUL.Q   D4, D0, D1 U, #0
  JNZ.T   D4, 31, no_bug
  JZ.T    D4, 30, no_bug
mac_erratum_condition:
  MOVH    D4, #0x8000 ; 0x8000_0000
  SUB     D4, D2, D4  ; SUB-1=ADD+1, set V/AV, leave C
  J       mac_complete
no_bug:
  MADD.Q  D4, D2, D0, D1 U, #1
mac_complete:
```

MADDS.Q D[c], D[d], D[a], D[b]U, #1; opcode[23:18]=20_H, opcode[7:0]=43_H

```
  MADDS.Q D4, D2, D0, D1 U, #1
```

becomes

```
  MUL.Q   D4, D0, D1 U, #0
  JNZ.T   D4, 31, no_bug
  JZ.T    D4, 30, no_bug
mac_erratum_condition:
  MOVH    D4, #0x8000 ; 0x8000_0000
  SUBS    D4, D2, D4  ; SUB-1=ADD+1, set V/AV, leave C
  J       mac_complete
no_bug:
  MADDS.Q D4, D2, D0, D1 U, #1
mac_complete:
```

MADDS.Q D[c], D[d], D[a], D[b] L, #1; opcode[23:18]=21_H, opcode[7:0]=43_H

```
  MADDS.Q D4, D2, D0, D1 L, #1
```

becomes

```
  MUL.Q   D4, D0, D1 L, #0
  JNZ.T   D4, #31, no_bug
  JZ.T    D4, #30, no_bug
```

```
mac_erratum_condition:
  MOVH    D4, #0x8000 ; 0x8000_0000
  SUBS    D4, D2, D4  ; SUB-1=ADD+1, set V/AV, leave C
  J       mac_complete
no_bug:
  MADDS.Q D4, D2, D0, D1 L, #1
mac_complete:
```

MSUB.Q E[c], E[d], D[a], D[b], #1; opcode[23:18]=1B$_H$, opcode[7:0]=63$_H$

```
  MSUB.Q  E4, E2, D0, D1, #1
```

becomes

```
  MUL.Q   D4, D0, D1, #0
  JNZ.T   D4, 31, no_bug
  JZ.T    D4, 30, no_bug
mac_erratum_condition:
  MOV     D4, D2      ; lower word add 0
  MOVH    D5, #0x8000 ; 0x8000_0000
  ADD     D5, D3, D5  ; ADD-1=SUB+1, set V/AV, leave C
  J       mac_complete
no_bug:
  MSUB.Q  E4, E2, D0, D1, #1
mac_complete:
```

MSUB.Q D[c], D[d], D[a], D[b] U, #1; opcode[23:18]=00$_H$, opcode[7:0]=63$_H$

```
  MSUB.Q  D4, D2, D0, D1 U, #1
```

becomes

```
  MUL.Q   D4, D0, D1 U, #0
  JNZ.T   D4, 31, no_bug
  JZ.T    D4, 30, no_bug
mac_erratum_condition:
  MOVH    D4, #0x8000 ; 0x8000_0000
  ADD     D4, D2, D4  ; ADD-1=SUB+1, set V/AV, leave C
  J       mac_complete
no_bug:
```

```
  MSUB.Q  D4, D2, D0, D1 U, #1
mac_complete:
```

MSUBS.Q D[c], D[d], D[a], D[b] U, #1; opcode[23:18]=20_H, opcode[7:0]=63_H

```
  MSUBS.Q D4, D2, D0, D1 U, #1
```

becomes

```
  MUL.Q   D4, D0, D1 U, #0
  JNZ.T   D4, 31, no_bug
  JZ.T    D4, 30, no_bug
mac_erratum_condition:
  MOVH    D4, #0x8000 ; 0x8000_0000
  ADDS    D4, D2, D4  ; ADD-1=SUB+1, set V/AV, leave C
  J       mac_complete
no_bug:
  MSUBS.Q D4, D2, D0, D1 U, #1
mac_complete:
```

MSUBS.Q D[c], D[d], D[a], D[b] L, #1; opcode[23:18]=21_H, opcode[7:0]=63_H

```
  MSUBS.Q D4, D2, D0, D1 L, #1
```

becomes

```
  MUL.Q   D4, D0, D1 L, #0
  JNZ.T   D4, 31, no_bug
  JZ.T    D4, 30, no_bug
mac_erratum_condition:
  MOVH    D4, #0x8000 ; 0x8000_0000
  ADDS    D4, D2, D4  ; ADD-1=SUB+1, set V/AV, leave C
  J       mac_complete
no_bug:
  MSUBS.Q D4, D2, D0, D1 L, #1
mac_complete:
```

CPU_TC.100 Mac instructions can saturate the wrong way and have problems computing PSW.V

Under certain error conditions, some saturating mac instructions saturate the wrong way. I.e. if they should saturate to the maximum positive representable number, they saturate to the maximum negative representable number, and vice versa.

In addition to this problem, the affected instructions also compute the overflow flag (PSW.V) incorrectly under certain circumstances. If PSW.V should be set it will be cleared, and if it should be cleared it will be set. When PSW.V is wrong, the instructions' results are wrong due to incorrect saturation.

The following instructions are subject to these errors:

MADDS.Q D[c], D[d], D[a], D[b], n; opcode[23:18]=22_H, opcode[7:0]=43_H

MADDS.Q E[c], E[d], D[a], D[b], n; opcode[23:18]=$3B_H$, opcode[7:0]=43_H

MSUBS.Q D[c], D[d], D[a], D[b], n; opcode[23:18]=22_H, opcode[7:0]=63_H

MSUBS.Q E[c], E[d], D[a], D[b], n; opcode[23:18]=$3B_H$, opcode[7:0]=63_H

The PSW.V is computed incorrectly under the following circumstances:

```
D[a] = 32'h8000_0000 and
D[b] = 32'h8000_0000 and
n = 1
```

Note: When n=0 all affected instructions operate correctly.

Workaround #1

Use the non saturating version of the instruction if the algorithm allows its use.

MADD.Q D[c], D[d], D[a], D[b], n; opcode[23:18]=02_H, opcode[7:0]=43_H

MADD.Q E[c], E[d], D[a], D[b], n; opcode[23:18]=$1B_H$, opcode[7:0]=43_H

MSUB.Q E[c], E[d], D[a], D[b], n; opcode[23:18]=$1B_H$, opcode[7:0]=63_H

Note: These alternative instructions are subject to erratum CPU_TC.0.99. Please ensure that the workaround for that erratum is implemented.

MSUB.Q D[c], D[d], D[a], D[b] , n; opcode[23:18]=02_H, opcode[7:0]=63_H

Note: This alternative instruction is subject to erratum CPU_TC.098. Please ensure that the workaround for that erratum is implemented.

Workaround #2

Prior to executing the erroneous instruction, test the operands to detect the PSW.V error condition. If the error condition exists, execute an alternative routine.

Following this routine PSW.V will be correct, but the result may have saturated incorrectly. So now determine which way the instruction should have saturated (if at all) and saturate manually.

Each erroneous instruction can be replaced by the relevant code sequence described below.

Note: An additional data register is needed to implement this workaround.

Note: The PSW.USB are destroyed by this workaround.

MADDS.Q D[c], D[d], D[a], D[b], #1; opcode[23:18]=22_H, opcode[7:0]=43_H

```
  MADDS.Q D4, D2, D0, D1, #1
```

becomes

```
  ; First correct the PSW.V problem
  MUL.Q   D4, D0, D1, #0
  JNZ.T   D4, 31, no_v_bug
  JZ.T    D4, 30, no_v_bug
v_bug:
  MOVH    D4, #0x8000           ; 0x8000_0000
  SUBS    D4, D2, D4            ; SUB -1 == ADD +1
  J       mac_complete          ; Saturation correct
no_v_bug:
  MADDS.Q D4, D2, D0, D1, #1
  ; PSW.V correct, but res may have saturated wrong way
  MFCR    D7, #0xFE04           ; get PSW
  JZ.T    D7, 30, mac_complete  ; End if no sat required
saturate:
  MOVH    D4, #0x8000           ; 0x80000000
  XOR     D7, D0, D1            ; Test sign of mul output
                                ; +ve => sat to max
  JNZ.T   D7, 31, mac_complete  ; if sat to min, finish
saturate_max:
  MOV     D7, #-1
```

```
  ADD     D4, D4, D7            ; 0x80000000 -1 = 0x7fffffff
mac_complete:
```

MADDS.Q E[c], E[d], D[a], D[b], #1; opcode[23:18]=3B$_H$, opcode[7:0]=43$_H$

```
  MADDS.Q E4, E2, D0, D1, #1
```

becomes

```
  MUL.Q   D4, D0, D1, #0
  JNZ.T   D4, 31, no_v_bug
  JZ.T    D4, 30, no_v_bug
v_bug:
  MOV     D4, D2                ; Lower word not modified
  ; Compute Upper Word
  MOVH    D5, #0x8000           ; 0x8000_0000
  SUB     D5, D3, D5            ; SUB -1 == ADD +1, set V
  J       test_v                ; perform sat64
no_v_bug:
  MADDS.Q E4, E2, D0, D1, #1
test_v:
  ; PSW.V correct, res may have saturated the wrong way
  MFCR    D7, #0xFE04           ; get PSW
  JZ.T    D7, 30, mac_complete  ; End if no sat required
saturate:
  MOVH    D5, #0x8000           ; 0x80000000_00000000
  MOV     D4, #0
  XOR     D7, D0, D1            ; Test sign of mul output
                                ; +ve => sat to max
  JNZ.T   D7, 31, mac_complete  ; if sat to min, finish
saturate_max:
  MOV     D4, #-1
; 0x80000000_00000000 -1 = 0x7fffffff_ffffffff
  ADD     D5, D5, D4
mac_complete:
```

MSUBS.Q D[c], D[d], D[a], D[b], #1; opcode[23:18]=22$_H$, opcode[7:0]=63$_H$

```
  MSUBS.Q D4, D2, D0, D1, #1
```

becomes

```
  MUL.Q    D4, D0, D1, #0
  JNZ.T    D4, 31, no_v_bug
  JZ.T     D4, 30, no_v_bug
v_bug:
  MOVH     D4, #0x8000           ; 0x8000_0000
  ADDS     D4, D2, D4            ; ADD -1 == SUB +1
  J        mac_complete          ; Saturation correct
no_v_bug:
  MSUBS.Q D4, D2, D0, D1, #1
  ; Now PSW.V is correct, but result may have saturated the
wrong way
  MFCR     D7, #0xFE04           ; get PSW
  JZ.T     D7, #30, mac_complete ; End no sat required
saturate:
  MOVH     D4, #0x8000           ; 0x80000000
  XOR      D7, D0, D1            ; Test sign of mul output
                                 ; -ve => sat to max
  JZ.T     D7, #31, mac_complete ; if sat to min, finish
saturate_max:
  MOV      D7, #-1
  ADD      D4, D4, D7            ; 0x80000000-1=0x7fffffff
mac_complete:
```

MSUBS.Q E[c], E[d], D[a], D[b], #1; opcode[23:18]=3B$_H$, opcode[7:0]=63$_H$

```
  MSUBS.Q E4, E2, D0, D1, #1
```

becomes

```
  MUL.Q    D4, D0, D1, #0
  JNZ.T    D4, 31, no_v_bug
  JZ.T     D4, 30, no_v_bug
v_bug:
  MOV      D4, D2                ; Lower word not modified
  ; Compute Upper Word
  MOVH     D5, #0x8000           ; 0x8000_0000
  ADD      D5, D3, D5            ; ADD -1 == SUB +1, set V
  J        test_v                ; perform sat64
no_v_bug:
```

```
  MSUBS.Q E4, E2, D0, D1, #1
  ; Now PSW.V is correct, but result may have saturated the
wrong way
test_v:
  MFCR    D7, #0xFE04           ; get PSW
  JZ.T    D7, #30, mac_complete ; Test V, finish if no
saturation required
saturate:
  MOVH    D5, #0x8000           ; 0x80000000_00000000
  MOV     D4, #0
  XOR     D7, D0, D1            ; Test sign of mul output
                                ; -ve => sat to max
  JZ.T    D7, #31, mac_complete ; if sat to min, finish
saturate_max:
  MOV     D4, #-1
; 0x80000000_00000000 -1 = 0x7fffffff_ffffffff
  ADD     D5, D5, D4
mac_complete:
```

Workaround #3

Where the use of one of these instructions is unavoidable, and both the correct result and PSW.USB are required, the UPDFL instruction can be used to modify PSW.USB in user mode. Note that the UPDFL instruction is only available in systems which have an FPU coprocessor present. The correct result can be obtained by using workaround #2.

CPU_TC.101 MSUBS.U can fail to saturate result, and MSUB(S).U can fail to assert PSW.V

Under certain circumstances two variants of the MSUB.U instruction can fail to assert PSW.V when expected to do so. When this occurs for MSUBS.U, the result fails to saturate.

The error affects the following instructions:

MSUB.U E[c], E[d], D[a], D[b]; opcode[23:18]=68_H, opcode[7:0]=23_H

MSUBS.U E[c], E[d], D[a], D[b]; opcode[23:18]=$E8_H$, opcode[7:0]=23_H

The error exists when the conditions below exist. Note that 'result' is as defined in the architecture manual. Note that D[a][31:16] and D[b][31:16] are both treated as unsigned.

```
(result < 0) and; PSW.V is expected to be asserted
(E[d][63] = 1) and
((D[a][31:16] * D[b][31:16])[31] = 0)
```

When the error conditions exist, PSW.V should be asserted, but is erroneously negated.

For the saturating instruction MSUBS.U, when the error condition exists the returned result (E[c]) is also wrong. Instead of saturating to 0, the return result is as given below:

```
E[c] = result[63:0]
```

Workaround #1

If it can be guaranteed that E[c][63] = 0 under all code execution conditions, then both of these erroneous instructions will produce the correct result and PSW and can therefore be used.

Workaround #2

For MSUB.U, if the PSW.V and PSW.SV flags generated are not used by the code, then the instruction can be used without a workaround.

Workaround #3

For MSUBS.U, if none of the PSW.USB flags are used by the code, then the following workaround can be used to produce the correct saturated result.

Note: This workaround destroys PSW.C

Note: This workaround requires at least one additional data register to be used (D7 in the example), and maybe more, if the destination register is the same as one of the source registers.

```
MSUBS.U  E4, E2, D0, D1
```

becomes

```
; Different routines if PSW.SV set at start
MUL.U   E4, D0, D1            ; execute mul
```

```
  SUBX    D4, D2, D4            ; sub lower word
  SUBC    D5, D3, D5            ; sub upper word
  MFCR    D7, #0xFE04           ; get PSW
  JNZ.T   D7, 31, mac_complete  ; Test PSW.C, no overflow
if set so finish

  ; MSUBS.U overflows, so saturate to zero
  MOV    D4, #0
  MOV    D5, #0
mac_complete:
```

Workaround #4

Where the use of one of these instructions is unavoidable, and both the correct result and PSW.USB are required, the UPDFL instruction can be used to modify PSW.USB in user mode. Note that the UPDFL instruction is only available in systems which have an FPU coprocessor present. The correct result can be obtained by using workaround #3 for MSUBS.U.

CPU_TC.102 Result and PSW.V can be wrong for some rounding, packed, saturating, mac instructions.

An error is made in the computation of the result and overflow flag (PSW.V) for some of the rounding packed saturating multiply-accumulate (Mac) instructions. The error affects the following instructions with a 64bit accumulater input:

MADDRS.H D[c], E[d], D[a], D[b] UL, n; opcode[23:18]=$3E_H$, opcode[7:0]=43_H

MSUBRS.H D[c], E[d], D[a], D[b] UL, n; opcode[23:18]=$3E_H$, opcode[7:0]=63_H

When these instructions erroneously detect overflow, the results are saturated and PSW.V and PSW.SV are asserted.

PSW.V is computed by combining ov_halfword1 and ov_halfword0, as described in the TriCore Architecture Manual (V1.3.6) for these instructions. When the error conditions exist ov_halfword1 is incorrectly computed. ov_halfword0 is always computed correctly.

Note: Under the error conditions, PSW.V may be correct depending on the value of ov_halfword0.

The specific error conditions are complex and are not described here.

Workaround #1

If the saturating version of the instruction does not need to be used, then consider using the unsaturating versions:

MADDR.H D[c], E[d], D[a], D[b] UL, n; opcode[23:18]=$1E_H$, opcode[7:0]=43_H

MSUBR.H D[c], E[d], D[a], D[b] UL, n; opcode[23:18]=$1E_H$, opcode[7:0]=63_H

Note: Whilst these instructions compute the result correctly, PSW.V and PSW.SV are still affected by the problem as described in erratum CPU_TC_0.97.

Workaround #2

If the algorithm allows use of 16 bit addition inputs, the code could be rewritten to use the following instructions instead:

MADDRS.H D[c], **D[d]**, D[a], D[b] UL, n; opcode[23:18]=$2C_H$, opcode[7:0]=83_H

MSUBRS.H D[c], **D[d]**, D[a], D[b] UL, n; opcode[23:18]=$2C_H$, opcode[7:0]=$A3_H$

Workaround #3

If the PSW.V and PSW.SV flags are used, and 32 bit addition inputs are required, then the routine should be rewritten to use two unpacked mac instructions. I.e.

```
MADDRS.H     D4, E2, D0, D1 UL, #n
```

Becomes

```
MADDRS.Q     D4, D3, D0 U, D1 U, #n
MADDRS.Q     D5, D2, D0 L, D1 L, #n
SH           D5, D5, #-16
INSERT       D4, D4, D5, #16, #16; Repack results into D4
```

Note: PSW.V must be tested between the two MADDR.Q instructions if PSW.SV cannot be utilised.

Note: This algorithm requires an additional register (D5 in the example)

The workaround for MSUBRS.H instruction is similar to the MADDRS.H instruction.

CPU_TC.103 Spurious parity errors can be generated

Under certain conditions, spurious memory parity errors may be generated by valid memory accesses. Such parity errors typically result in the generation of an NMI trap to the CPU.

Due to the TriCore1 pipeline, and the potential presence of an MMU re-mapping addresses, instruction fetch requests are initially predicted to be to either SPRAM or ICache. The exact target of an instruction fetch is not known until the cycle after the initial memory access. Note that this prediction mechanism operates independently of whether or not an MMU is actually present. In the case of PMEM the spurious parity error problem may occur when an instruction fetch request targeting an SPRAM address is immediately followed by a second instruction fetch request targeting a non-SPRAM address. In this case the second memory access is predicted to target an SPRAM address and the PMEM is speculatively accessed accordingly. In the following cycle the speculative access is cancelled and re-issued to the correct target, but the speculative access cancellation is not communicated to the parity detection logic. It may happen that the second access, were it targeting SPRAM, maps to a non-valid location in memory hence potentially causing a spurious parity error.

A similar problem exists in the case of DMEM, where a load/store access to an LDRAM address followed by an access to a non-LDRAM address, and where the second address is aliased to a non-valid DMEM location, could trigger a spurious DMEM parity error. However, in the case of DMEM the problem cannot be isolated to specific code sequences, since the first load/store access, targeting an LDRAM address, could be due to a context restore operation following an interrupt.

PMEM Workaround

In order to avoid spurious parity errors in the PMEM case, it must be ensured that any instruction fetch to an SPRAM address is not followed immediately by an instruction fetch to a non-SPRAM address with an address which could cause this problem. Any software routine placed in SPRAM should not return

directly to the calling code, rather it must jump to a sub routine placed in a 'safe' non-SPRAM address which itself then returns to the calling code.

'Safe' non-SPRAM addresses are defined as any address except:

bit [14:13] = 11_b (TC1x6x PMEM); &

bit [15:13] = 111_b (TC1x6x DMEM).

The interrupt vector table (or trap vector table), if located in a non-SPRAM location, must also be located at a 'safe' address. If they are located in SPRAM, the return to calling code must be indirect i.e. jump to a safe address and execute the RET/RFE instruction from the 'safe' address.

If this workaround is not possible for a given application, then PMEM parity detection and flagging must be disabled by setting SCU_PETCR.PEN1 = 0.

DMEM Workaround

No software workaround for the DMEM case is possible.In this case the DMEM parity detection and flagging must be disabled by setting SCU_PETCR.PEN0 = 0.

CPU_TC.104 Double-word Load instructions using Circular Addressing mode can produce unreliable results

Under certain conditions, a double-word load instruction (LD.D) using circular addressing mode can produce unreliable results. The problem occurs when the following conditions are met:

- The effective address of the LD.D instruction using circular addressing mode (Base+Index) is only half-word aligned (not word or double-word aligned) and targets a circular buffer placed in Data Scratchpad RAM (DSPR or LDRAM) or cacheable data memory (where an enabled Data Cache is present).
- The effective address of the LD.D instruction is such that the memory access runs off the end of the circular buffer, with the first three half-words of the required data at the end of the buffer and last half-word wrapped around to the start of the buffer.

- The TriCore CPU store buffer contains a pending store instruction targeting at least one of the three data half-words from the end of the circular buffer being read.

Note: The TriCore1 CPU contains a single store buffer. A store operation is placed in the store buffer when it is followed in the Load-Store pipeline by a load operation. The store buffer empties when the next store operation occurs or when the Load-Store pipeline contains no memory access operation.

When these conditions are met, the first memory access (to the upper three half-words of the buffer) of the LD.D instruction is made, but the dependency to the pending store instruction is then detected and the access cancelled. The store is then performed in the next cycle and the first access of the LD.D instruction subsequently re-issued. However, in this specific set of circumstances the first access of the LD.D instruction is re-issued incorrectly using the data size of the second access (half-word). As such not all the required data half-words are read from memory.

Under most circumstances this problem is not detectable, since the SRAM memories used hold the previous values read with the data merged from the store operation. However, if another bus master accesses the Data Scratchpad RAM within this sequence, but before the LD.D is re-issued, the SRAM memory outputs no longer default to the required data and the data returned by the LD.D instruction is incorrect.

Example 1:

```
a12 = 0xd0001020
a13 = 0x00180012
...
ST.Q [a12/a13+c]0, d14
LD.D e10, [a12/a13+c]2
...
```

Example 2:

```
a12 = 0xd0001020
a13 = 0x00180012
...
ST.Q [a12/a13+c]0, d14
```

```
LD.W d2, [a4]; Previous ST.Q -> Store Buf
LD.D e10, [a12/a13+c]2 ; ST.Q still in Store Buf
...
```

Workaround

Wherever possible, double-word load instructions using circular addressing mode should be constrained such that their effective address (Base+Index) is word aligned.

Where this is not possible, and where it cannot be guaranteed that the CPU store buffer will not contain an outstanding store operation which could conflict with the LD.D instruction as described previously, the LD.D instruction must be preceded by a NOP.

```
...
ST.Q [a12/a13+c]0, d14
NOP
LD.D e10, [a12/a13+c]2
...
```

DMA_TC.004 Reset of registers OCDSR and SUSPMR is connected to FPI reset

The reset of the debug related registers OCDSR and SUSPMR should be connected to OCDS reset according to the specification. Instead of this, their reset is connected to the normal FPI reset, i.e. these registers get reset with a normal FPI reset.

Workaround

Re-initialize the (modified) OCDSR and SUSPMR register contents whenever a FPI reset has been performed.

DMA_TC.005 Do not access MExPR, MExAENR, MExARR with RMW instructions

The DMA registers MExPR, MExAENR and MExARR are showing a misbehaviour when being accessed with LDMST or ST.T instructions.

Workaround

Do not access these registers with RMW-instructions (Read/Modify/Write). Use normal write instructions instead.

DMA_TC.007 CHSRmn.LXO bit is not reset by channel reset

The software can request a channel reset with register bit CHRSTR.CHmn. In contrast to the specification the bit CHSRmn.LXO (pattern search result flag) is not reset.

Workaround

Perform a dummy move with a known non-matching pattern to clear it.

DMA_TC.009 Transaction flagged as lost, but nevertheless executed

Specified behavior:

If a channel is still running and another channel trigger event occurs, the transaction lost bit ERRSR.TRLx will be set and the channel trigger event is lost.

Problem description:

If the channel trigger event occurs between the last read and the last write of a transaction the ERRSR.TRLx bit will be set correctly. But the next transaction will be performed, instead of been discarded. This transaction starts with TCOUNT=0 which is impossible under normal conditions. If CHCRx.RROAT=1 this could lead to an endless transaction.

Workaround

1. Monitor and avoid lost transactions (for instance bit ETRLmn of register EER can be used to generate an interrupt if a lost transaction occurs).
2. Reset the channel in case of a lost transaction.

DMA_TC.010 Channel reset disturbed by pattern found event

There is a corner case where a software triggered channel reset request collides with a concurrently running pattern found event. If both operations occur at the same time, the channel will be reset as usual, but the pattern found event will cause the destination address in DADR register to be incremented/decremented once more.

Workaround

1. When using pattern matching always issue two channel reset operations.
2. The occurrence of this corner case can be detected by software (incorrect DADR value). In this case a second channel reset request is needed.

DMA_TC.011 Pattern search for unaligned data fails on certain patterns

The DMA can be programmed to search for a pattern while doing a DMA transfer. It can search also for pattern which are distributed across 2 separate DMA moves, so called unaligned pattern. In this case the DMA stores the match result of a move in the bit CHSRmn.LXO.

Example: search unaligned for byte 0x0D followed by byte 0x0A
first move found 0x0D => CHSRmn.LXO is set to '1'
second move found 0x0A => found & LXO='1' => pattern found

Problem description:

Once LXO is set it will be cleared with the next move, no matter if there is another match or not. This causes pattern not to be found when the first match occurs twice in the DMA data stream.

Example: search unaligned for byte 0x0D followed by byte 0x0A
first move found 0x0D => CHSRmn.LXO is set to '1'

second move found 0x0D => LXO cleared
third move found 0x0A => pattern NOT found !!

Workaround

Search only for the second half of the pattern. If a match occurs check by software if it is preceded by the first half of the pattern.

DMA_TC.012 No wrap around interrupt generated

If the buffer size of a DMA channel is set to its maximum value (=32kbytes, bit field ADRCRmn.CBLx = 0xF), then no address wrap around interrupts will be generated for this channel.

Workaround

None.

DMI_TC.005 DSE Trap possible with no corresponding flag set in DMI_STR

Under certain circumstances it is possible for a DSE trap to be correctly taken by the CPU but no corresponding flag is set in the DMI Synchronous Trap flag Register (DMI_STR). The problem occurs when an out-of-range access is made to the Data ScratchPad RAM (DSPR), which would ordinarily set the DMI_STR.LRESTF flag.

If an out-of-range access is made in cycle N, but cancelled, and followed by a second out-of-range access in cycle N+1, the edge detection logic associated with the DMI_STR register fails and no flag is set.

Workaround

If a DSE trap occurs with no associated flag set in the DMI_STR register, software should treat this situation as if the DMI_STR.LRESTF flag was set.

FADC_TC.005 Equidistant multiple channel-timers

The description is an example for timer_1 and timer_2, but can also affect all other combinations of timers.

Timer_1 and Timer_2 are running with different reload-values. Both timers should start conversions with the requirement of equidistant timing.

Problem description:

Timer_1 becomes zero and starts a conversion. Timer_2 becomes zero during this conversion is running and sets the conversion-request-bit of channel_2. At the end of the conversion for channel_1 this request initiates a start for channel_2. But the Timer_2 is reloaded only when setting the request-bit for channel_2 and is decremented during the conversion of channel_1.

The correct behavior would be a reload when the requested conversion (of channel_2) is started.

Therefore the start of conversion for channel_2 is delayed by maximum one conversion-time.After this delay it will be continued with equidistant conversion-starts. Please refer to figure 1.

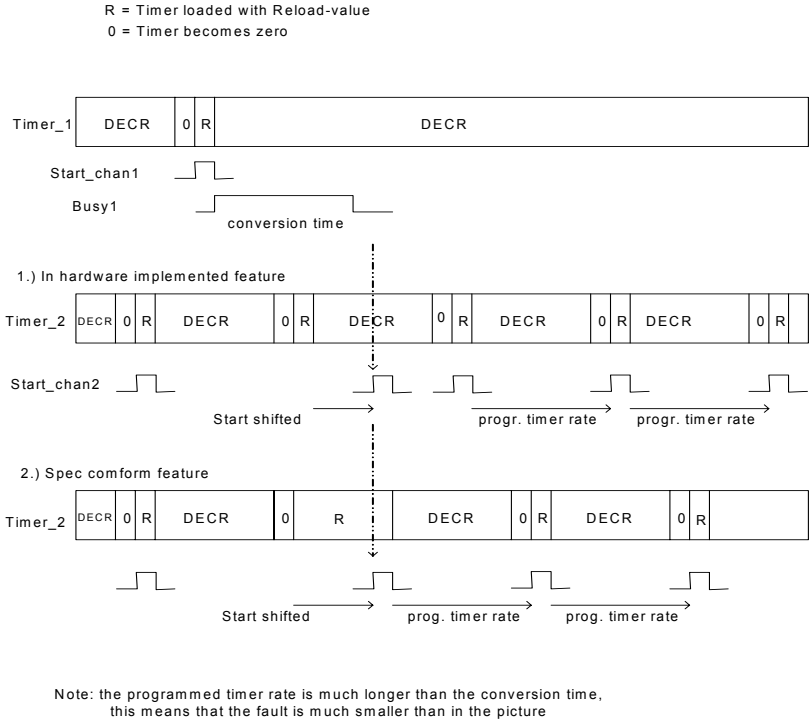

Note: the programmed timer rate is much longer than the conversion time, this means that the fault is much smaller than in the picture

Figure 2 Timing concerning equidistant multiple timers

Workaround

Use one timer base in combination with neighboring trigger and selection by software which result has to be taken into account.

FLASH_TC.029 In-System flash operations fails

The programming or erasing of the internal Program- or Data Flash might cause a problem if in parallel to the command sequence transfer code is fetched out of the Program Flash.

In detail the following command sequence is forbidden on the pipelined LMB:

- write toflashaddress 1
- read fromflashaddress 2

It is independent to which flash (Dflash or Pflash) the store or the load command is addressed to.

The problems occurs in the following case:

Parallel code fetch and flash command

The problematic LMB sequence can occur when certain flash command sequences are written (Dflash or Pflash) and code is fetched from the Pflash simultaneously. See table 1 for critical command sequence cycles.

Care has to be taken, that the critical command sequence cycles will not be interrupted by an interrupt event.

Special trap handling is required as well.

Workaround

The following code is mandatory to be executed in the Scratch pad sram for the critical command sequence cycles.

```
FLASH_LoadPageDW:
      mfcr   d14, ICR
      disable
      nop
      st.d    [a4], d4/d5  this is the critical cycle
      movh.a  a15,#0xf800
      ld.w    d15,[a15]0x508
      nop
      nop
      nop
      jz.t    d14, 8, _FLASH_LoadPageDW_exit
      enable
_FLASH_LoadPageDW_exit:
      ret
```

```
FLASH_WriteCommand:
       mfcr    d14, ICR
       disable
       nop
       st.b    [a4], d4          this is the critical cycle
       movh.a  a15,#0xf800
       ld.w    d15,[a15]0x508
       nop
       nop
       nop
       jz.t    d14, 8, _FLASH_WriteCommand_exit
       enable
 _FLASH_WriteCommand_exit:
       ret
```

Trap handling

The trap vector table has to be located in the Scratch pad sram and the following lines have to be located directly at the beginning of all Trap table entries.

```
_entry:  movh.a  a15,#0xf800
 ld.w    d15,[a15]0x508
 nop
 nop
 nop
```

Command Sequences for Flash Control

Table 11 The critical command sequence cycles are marked in bold and colored in red.

Command Sequence	Notes	1. Cycle		2. Cycle		3. Cycle		4. Cycle		5. Cycle		6. Cycle	
	1, 2	Addr	Data	Addr	Data	Addr	Data	Addr	Data	Addr	Data	Addr	Data
Reset to Read		5554	F0										
Enter Page Mode*)		5554	5x										
Load Page*	3	**55F0**	**WD**										
Write Page*)	4, 5	5554	AA	AAA8	55	5554	A0	**PA**	**AA**				
Write UC Page*)	5	5554	AA	AAA8	55	5554	C0	**UCPA**	**AA**				
Erase Sector*)	5	5554	AA	AAA8	55	5554	80	5554	AA	AAA8	55	**SA**	**30**
Erase Phys Sector*)	5, 6	5554	AA	AAA8	55	5554	80	5554	AA	AAA8	55	**SA**	**40**
Erase UC Block*)	5	5554	AA	AAA8	55	5554	80	5554	AA	AAA8	55	**UCBA**	**C0**
Disable Write Protection	7	5554	AA	AAA8	55	553C	UL	AAA8	PW	AAA8	PW	5558	05
Disable Read Protection	7	5554	AA	AAA8	55	553C	00	AAA8	PW	AAA8	PW	5558	08

Table 11 The critical command sequence cycles are marked in bold and colored in red.

Command Sequence	Notes	1. Cycle		2. Cycle		3. Cycle		4. Cycle		5. Cycle		6. Cycle	
Resume Protection		5554	5E										
Clear Status		5554	F5										

FPU_TC.001 FPU flags always update with FPU exception

SCU_STAT latches the value of the FPU flags each time there is an FPU exception. This will overwrite the information stored in the SCU_STAT, which correspond to the first exception before the user read the information.

Workaround

None.

MLI_TC.006 Receiver address is not wrapped around in downward direction

Overview:

- An MLI receiver performs accesses to an user defined address range, which is represented as a wrap around buffer.
- "Optimized frames" are frames without address information. The built-in address prediction defines the target address which is based on the previous address delta.
- If a buffer boundary is exceeded, the address has to be wrapped around to the opposite boundary, so that the accessed space is always within the buffer.
- An MLI transmitter will stop generating optimized frames if a user performs a wrap around access sequence in a transfer window.

Problem:

Only if a non-MLI transmitter (for example, software implemented) sends an optimized frame to a MLI receiver, but crossing the buffer boundaries, the MLI receiver will:

- Wrap around if the top limit is exceeded (upward direction).
- Access an address out of the buffer if the bottom limit is exceeded (downward direction).

The second behaviour is erroneous, as a wrap around should be performed.

Note: The hardware implemented MLI transmitter in the existing Infineon devices will not use optimized frames if a user performs a wrap around access sequence in a transfer window.

Workaround

A (software implemented) non-MLI transmitter should use non-optimized frames when crossing buffer boundaries.

MLI_TC.007 Answer frames do not trigger NFR interrupt if RIER.NFRIE=10_B and Move Engine enabled

If RIER.NFRIE=10_B, a NFR interrupt is generated whenever a frame is received but, if Move Engine is enabled (RCR.MOD=1_B, "automatic mode"), the NFR interrupt is suppressed for read/write/base frames. However, this interrupt is actually also supressed for answer frames, which are not serviced by Move Engine.

Workaround

To trigger NFR interrupts for read answer frames, having Move Engine enabled, then:

- Set RIER.NFRIE=00_B when no read is pending.
- Set RIER.NFRIE=01_B when a read is pending. Any read/write/base/answer frame will trigger the NFR interrupt. Then, by reading RCR.TF in the interrupt handler, it can be detected whether the received frame was the expected answer frame or not.

MLI_TC.008 Move engines can not access address $F01E0000_H$

DMA/MLI move engines are not able to access the address $F01E0000_H$, which represents the first byte of the small transfer window of pipe 0 in MLI0 (MLI0_SP0). If a DMA/MLI move engine access to this address is performed, the move engine will be locked.

Workaround

- Use the large transfer window (MLI0_LP0) when performing DMA/MLI accesses to pipe 0 in MLI0.
- Use a different bus master (TriCore) to access the small transfer window.

MSC_TC.004 MSC_USR write access width

A 32bit store access to the USR register is working w/o problems, but 16/8bit stores should only address the lower part of the register. All other stores are leading to unexpected results.

Reason: If the upper halfword is written with a 16bit store, or the 2nd/3rd/4th byte is written with a 8bit store access, all writable bits of the USR register (bit 4..0) will be reset to zero.

Workaround

For a store-access to register USR use only one of the following 3 access-types:

1. a 32bit access,
2. a 16bit access to the lower address-word,
3. a 8bit-access to the lowest address-byte.

All other store-access-versions will reset the bits MSC_USR(4..0) to zero.

MSC_TC.006 Upstream frame startbit not recognized

The MSC upstream-channel is able to receive multiple frames at the asynchronous input-pin without any interframe idle-time required.

Therefore the state machine of the upstream channel is sensing for an incoming new startbit (high-low edge) in the last state of a frame. If there is no edge, the state machine changes to idle state. If an edge is recognized, the state machine will start receiving the next frame. Under certain timing conditions, the start-bit of an upstream-frame which is send without any idle-time, directly after the previous frame, will not be recognized and therefore this frame will not be received correctly. In that case the startbit might be recognized erroneously whithin the dataframe. The missbehaviour can occur if the high-low edge of the start-bit is located close to the rising edge of the internal MSC module-clock and is jittering around this clock-edge.

Uncritical transmission

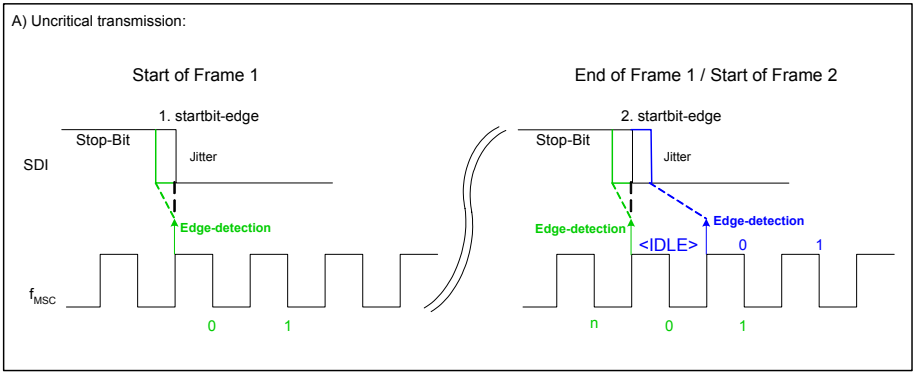

Figure 3 Uncritical transmission

As the falling startbit edge is shifted to the left of the rising clock edge (**Figure 3** left), there occurs a secure detection of the next start-bit edge in the last cycle of the previous frame (here cycle n, **Figure 3** right) independant from the applied jitter to this edge.

Critical transmission

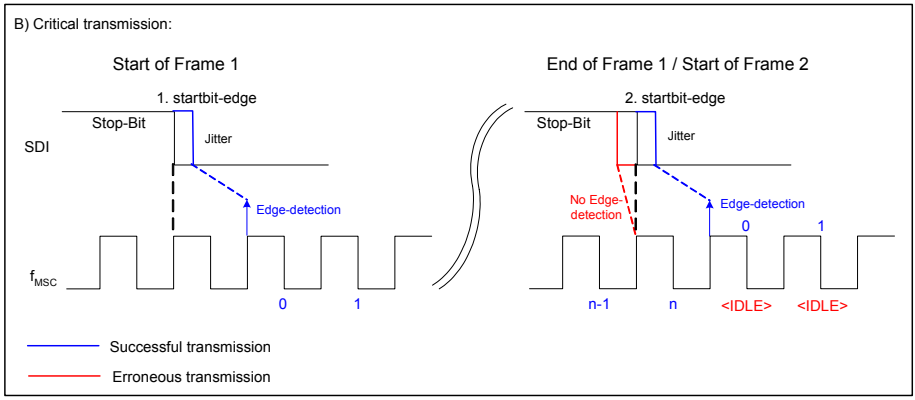

Figure 4 Critical transmission

If the high-low edge of the start-bit in the first frame is just not detected by the near clock-edge (**Figure 4** - left) and the start-bit edge of the second frame is jittering to cycle n-1 (**Figure 4** - right, red coloured), then an erroneous transmission will take place. In this case the state-machine switches to IDLE after the last state n and wakes up on the next falling edge that may be a data-bit recognized as a start-bit. If the start-bit of the second frame is jittering to cycle n (**Figure 4** - right, blue colored), then the state-machine will not switch to IDLE but will start receiving the next frame correctly.

Workaround 1

Insert an additional interframe idle-time for example by inserting a third stop-bit into the frame send by the transmit-unit. Then the state machine is forced to go to IDLE-state and will be ready for the next frame. This is the most secure workaround; no other conditions have to be regarded.

Workaround 2

Delay of the data stream relative to the downstream clock output FCLPx/FCLNx.

The delay depends on the maximal skew in the data-stream. For this workaround the downstream clock FCLPx/FCLNx can be measured as reference and the data stream at the input of the upstream channel SDIx has to be adjusted according to the setup- and hold-times of the input-pins SDIx.

Figure 5 shows the principle blockdiagram of the input synchronization stage of the MSC module.

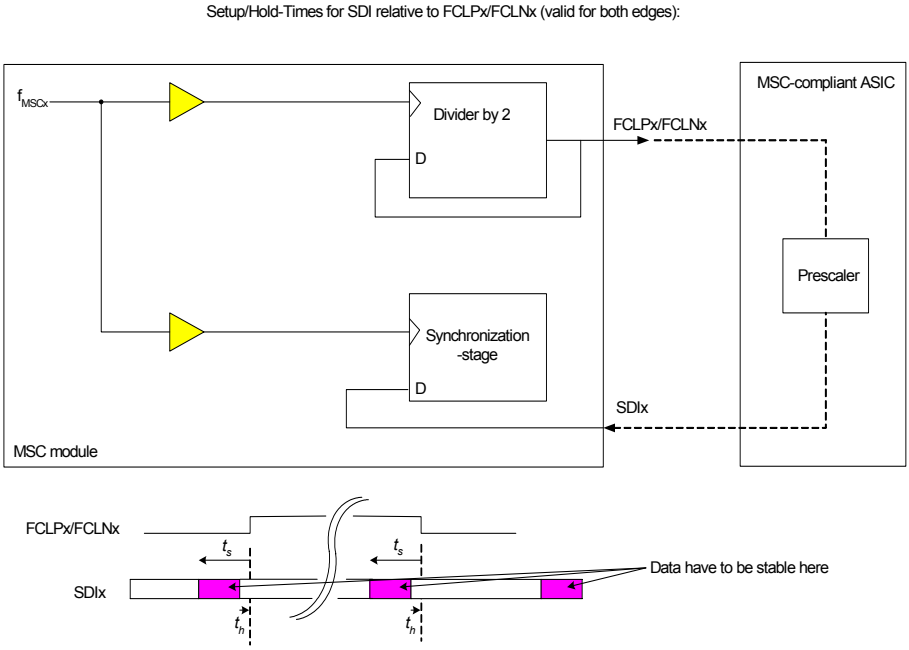

Figure 5 Delay adjustment relative to the module clock

The values for setup- and hold-times are listed in the following table. They were taken out of the timing analysis tool of the microcontroller device and apply to both, the rising and the falling edge.

Table 12 Setup and hold times

Input pin	Output pin	Setup-time t_s	Hold-time t_h
SDI0	FCLP0A	11 ns	-4 ns
SDI0	FCLN0	11 ns	-4 ns
SDI0	FCLP0B	13 ns	-4 ns

This solution is only practicable, if the transmitter of the frame can be synchronized to the downstream-clock pin FCLPx/FCLNx and if the frequency of the frame transmitter is well lower than the downstream clock FCLPx/FCLNx.

Preconditions:

- An MSC-compliant ASIC is connected to the MSC module.
- FCLPx/FCLNx is activated permanently
- SDIx upstream baudrate is derived from the downstream clock output pins FCLPx/FCLNx

MSC_TC.007 No interrupt generated for first bit out

When the downstream-channel starts the transfer of a data frame and the data frame interrupt is configured by `ICR.EDIE` = 10_B, then an interrupt will be generated when the first data bit is shifted out.
This interrupt can be used to update the data register by software.

But the interrupt generation with the first shifted data bit only takes place if this bit is part of the shift register low SRL (downstream channel configured by `DSC.NDBL` not equal 0). If shift register low SRL is disabled for data transfer (`DSC.NDBL` = 0) then no interrupt will be generated for the first transfered data bit (being part of shift register high SRH).

If the downstream channel is configured for interrupt generation with the last transfered data bit (`ICR.EDIE` = 01_B) the interrupt is correctly generated.

Workarounds

- If the SRL part is not used for data transfer and an unused chip enable output line ENx is available, then a dummy frame with at least one data bit

should be generated by SRL (DSC.NDBL = 00001_B). For this workaround it is sufficient to keep the ENx line selected for SRL data as internal signal (not visible on output pins). Please note that this configuration introduces at least one more data bit in the output stream before the chip enable signal selected for SRH is activated.
As a result, the repetition rate in data repetition mode is slightly reduced. It is recommended to disable the select bit insertion for the SRL dummy frame.

- The interrupt generation with the last shifted data bit can be used instead, if the data register is updated before a new data frame is started. In data repetition mode the passive phase of the data frame can be extended to ensure that the required timing is met.
  In triggered mode the software can trigger the transfer after the update of the data register has taken place.
- Always use at least the SRL part for data transmission.

MultiCAN_AI.040 Remote frame transmit acceptance filtering error

Correct behaviour:

Assume the MultiCAN message object receives a remote frame that leads to a valid transmit request in the same message object (request of remote answer), then the MultiCAN module prepares for an immediate answer of the remote request. The answer message is arbitrated against the winner of transmit acceptance filtering (without the remote answer) with a respect to the priority class (MOARn.PRI).

Wrong behaviour:

Assume the MultiCAN message object receives a remote frame that leads to a valid transmit request in the same message object (request of remote answer), then the MultiCAN module prepares for an immediate answer of the remote request. The answer message is arbitrated against the winner of transmit acceptance filtering (without the remote answer) with a respect to the CAN arbitration rules and not taking the PRI values into account.

If the remote answer is not sent out immediately, then it is subject to further transmit acceptance filtering runs, which are performed correctly.

Workaround

Set MOFCRn.FRREN=1_B and MOFGPRn.CUR to this message object to disable the immediate remote answering.

MultiCAN_AI.041 Dealloc Last Obj

When the last message object is deallocated from a list, then a false list object error can be indicated.

Workaround

- Ignore the list object error indication that occurs after the deallocation of the last message object.

or

- Avoid deallocating the last message object of a list.

MultiCAN_AI.042 Clear MSGVAL during transmit acceptance filtering

Assume all CAN nodes are idle and no writes to MOCTRn of any other message object are performed. When bit MOCTRn.MSGVAL of a message object with valid transmit request is cleared by software, then MultiCAN may not start transmitting even if there are other message objects with valid request pending in the same list.

Workaround

- Do not clear MOCTRn.MSGVAL of any message object during CAN operation. Use bits MOCTRn.RXEN, MOCTRn.TXEN0 instead to disable/reenable reception and transmission of message objects.

or

- Take a dummy message object, that is not allocated to any CAN node. Whenever a transmit request is cleared, set MOCTRm.TXRQ of the dummy

message object thereafter. This retriggers the transmit acceptance filtering process.

MultiCAN_AI.043 Dealloc Previous Obj

Assume two message objects m and n (message object n = MOCTRm.PNEXT, i.e. n is the successor of object m in the list) are allocated. If message m is reallocated to another list or to another position while the transmit or receive acceptance filtering run is performed on the list, then message object n may not be taken into account during this acceptance filtering run. For the frame reception message object n may not receive the message because n is not taken into account for receive acceptance filtering. The message is then received by the second priority message object (in case of any other acceptance filtering match) or is lost when there is no other message object configured for this identifier.For the frame transmission message object n may not be selected for transmission, whereas the second highest priority message object is selected instead (if any). If there is no other message object in the list with valid transmit request, then no transmission is scheduled in this filtering round. If in addition the CAN bus is idle, then no further transmit acceptance filtering is issued unless another CAN node starts a transfer or one of the bits MSGVAL, TXRQ, TXEN0, TXEN1 is set in the message object control register of any message object.

Workaround

- After reallocating message object m, write the value one to one of the bits MSGVAL, TXRQ, TXEN0, TXEN1 of the message object control register of any message object in order to retrigger transmit acceptance filtering.
- For frame reception, make sure that there is another message object in the list that can receive the message targeted to n in order to avoid data loss (e.g. a message object with an acceptance mask=0_D and PRI=3_D as last object of the list).

MultiCAN_AI.044 RxFIFO Base SDT

If a receive FIFO base object is located in that part of the list, that is used for the FIFO storage container (defined by the top and bottom pointer of this base object) and bit SDT is set in the base object (CUR pointer points to the base object), then MSGVAL of the base object is cleared after storage of a received frame in the base object without taking the setting of MOFGPRn.SEL into account.

Workaround

Take the FIFO base object out of the list segment of the FIFO slave objects, when using Single Data Transfer.

MultiCAN_AI.045 0VIE Unexpected Interrupt

When a gateway source object or a receive FIFO base object with MOFCRn.OVIE set transmits a CAN frame, then after the transmission an unexpected interrupt is generated on the interrupt line as given by MOIPRm.RXINP of the message object referenced by m=MOFGPRn.CUR.

Workaround

Do not transmit any CAN message by receive FIFO base objects or gateway source objects with bit MOFCRn.OVIE set.

MultiCAN_AI.046 Transmit FIFO base Object position

If a message object n is configured as transmit FIFO base object and is located in the list segment that is used for the FIFO storage container (defined by MOFGPRn.BOT and MOFGPRn.TOP) but not at the list position given by MOFGPRn.BOT, then the MultiCAN uses incorrect pointer values for this transmit FIFO.

Workaround

The transmit FIFO works properly when the transmit FIFO base object is either at the bottom position within the list segment of the FIFO (MOFGPRn.BOT=n) or outside of the list segment as described above.

MultiCAN_TC.025 RXUPD behavior

When a CAN frame is stored in a message object, either directly from the CAN node or indirectly via receive FIFO or from a gateway source object, then bit MOCTR.RXUPD is set in the message object before the storage process and is automatically cleared after the storage process.

Problem description

When a standard message object (MOFCR.MMC) receives a CAN frame from a CAN node, then it processes its own RXUPD as described above (correct).

In addition to that, it also sets and clears bit RXUPD in the message object referenced by pointer MOFGPR.CUR (wrong behavior).

Workaround

The “foreign” RXUPD pulse can be avoided by initializing MOFGPR.CUR with the message number of the object itself instead of another object (which would be message object 0 by default, because MOFGPR.CUR points to message object 0 after reset initialization of MultiCAN).

MultiCAN_TC.026 MultiCAN Timestamp Function

The timestamp functionality does not work correctly.

Workaround

Do not use timestamp.

MultiCAN_TC.027 MultiCAN Tx Filter Data Remote

Message objects of priority class 2 (MOAR.PRI = 2) are transmitted in the order as given by the CAN arbitration rules. This implies that for 2 message objects which have the same CAN identifier, but different DIR bit, the one with DIR = 1 (send data frame) shall be transmitted before the message object with DIR = 0, which sends a remote frame. The transmit filtering logic of the MultiCAN leads to a reverse order, i.e the remote frame is transmitted first. Message objects with different identifiers are handled correctly.

Workaround

None.

MultiCAN_TC.028 SDT behavior

Correct behavior

Standard message objects:

MultiCAN clears bit MOCTR.MSGVAL after the successful reception/transmission of a CAN frame if bit MOFCR.SDT is set.

Transmit Fifo slave object:

MultiCAN clears bit MOCTR.MSGVAL after the successful reception/transmission of a CAN frame if bit MOFCR.SDT is set. After a transmission, MultiCAN also looks at the respective transmit FIFO base object and clears bit MSGVAL in the base object if bit SDT is set in the base object and pointer MOFGPR.CUR points to MOFGPR.SEL (after the pointer update).

Gateway Destination/Fifo slave object:

MultiCAN clears bit MOCTR.MSGVAL after the storage of a CAN frame into the object (gateway/FIFO action) or after the successful transmission of a CAN frame if bit MOFCR.SDT is set. After a reception, MultiCAN also looks at the respective FIFO base/Gateway source object and clears bit MSGVAL in the base object if bit SDT is set in the base object and pointer MOFGPR.CUR points to MOFGPR.SEL (after the pointer update).

Problem description

Standard message objects:

After the successful transmission/reception of a CAN frame, MultiCAN also looks at message object given by MOFGPR.CUR. If bit SDT is set in the referenced message object, then bit MSGVAL is cleared in the message object CUR is pointing to.

Transmit FIFO slave object:

Same wrong behaviour as for standard message object. As for transmit FIFO slave objects CUR always points to the base object, the whole transmit FIFO is set invalid after the transmission of the first element instead after the base object CUR pointer has reached the predefined SEL limit value.

Gateway Destination/Fifo slave object:

Correct operation of the SDT feature.

Workaround

Standard message object:

Set pointer MOFGPR.CUR to the message number of the object itself.

Transmit FIFO:

Do not set bit MOFCR.SDT in the transmit FIFO base object. Then SDT works correctly with the slaves, but the FIFO deactivation feature by CUR reaching a predefined limit SEL is lost.

MultiCAN_TC.029 Tx FIFO overflow interrupt not generated

Specified behaviour

After the successful transmission of a Tx FIFO element, a Tx overflow interrupt is generated if the FIFO base object fulfils these conditions:

- Bit MOFCR.OVIE=1, AND
- MOFGPR.CUR becomes equal to MOFGPR.SEL

Real behaviour

A Tx FIFO overflow interrupt will not be generated after the transmission of the Tx FIFO base object.

Workaround

If Tx FIFO overflow interrupt needed, take the FIFO base object out of the circular list of the Tx message objects. That is to say, just use the FIFO base object for FIFO control, but not to store a Tx message.

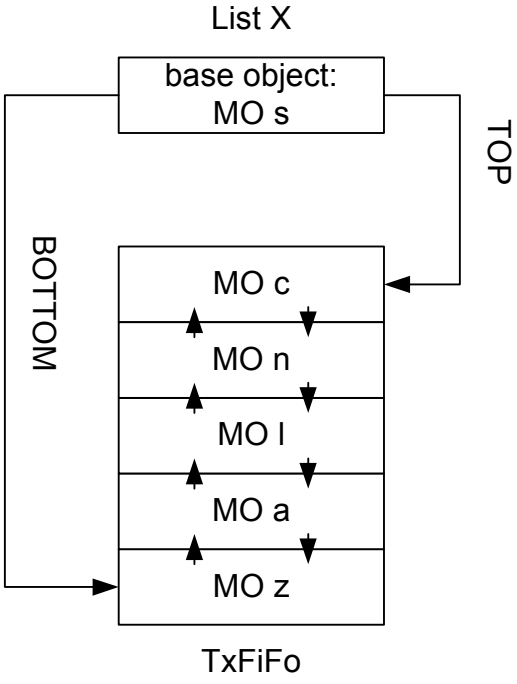

Figure 6 FIFO structure

MultiCAN_TC.030 Wrong transmit order when CAN error at start of CRC transmission

The priority order defined by acceptance filtering, specified in the message objects, define the sequential order in which these messages are sent on the CAN bus. If an error occurs on the CAN bus, the transmissions are delayed due to the destruction of the message on the bus, but the transmission order is kept. However, if a CAN error occurs when starting to transmit the CRC field, the arbitration order for the corresponding CAN node is disturbed, because the faulty message is not retransmitted directly, but after the next transmission of the CAN node.

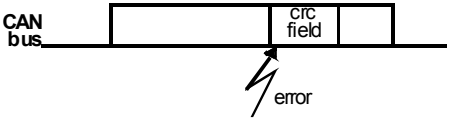

Figure 7

Workaround

None.

MultiCAN_TC.031 List Object Error wrongly triggered

If the first list object in a list belonging to an active CAN node is deallocated from that list position during transmit/receive acceptance filtering (happening during message transfer on the bus), then a "list object" error may occur (NSRx.LOE=1_B), which will cause that effectively no acceptance filtering is performed for this message by the affected CAN node.

As a result:

- for the affected CAN node, the CAN message during which the error occurs will not be stored in a message object. This means that although the message is acknowledged on the CAN bus, its content will be ignored.

- the message handling of an ongoing transmission is not disturbed, but the transmission of the subsequent message will be delayed, because transmit acceptance filtering has to be started again.
- message objects with pending transmit request might not be transmitted at all due to failed transmit acceptance filtering.

Workaround

EITHER:

- Avoid deallocation of the first element on active CAN nodes. Dynamic reallocations on message objects behind the first element are allowed, OR
- Avoid list operations on a running node. Only perform list operations, if CAN node is not in use (e.g. when NCRx.INIT=1_B)

MultiCAN_TC.032 MSGVAL wrongly cleared in SDT mode

When Single Data Transfer Mode is enabled (MOFCRn.SDT=1_B), the bit MOCTRn.MSGVAL is cleared after the reception of a CAN frame, no matter if it is a data frame or a remote frame.

In case of a remote frame reception and with MOFCR.FRREN = 0_B, the answer to the remote frame (data frame) is transmitted despite clearing of MOCTRn.MSGVAL (incorrect behaviour). If, however, the answer (data frame) does not win transmit acceptance filtering or fails on the CAN bus, then no further transmission attempt is made due to cleared MSGVAL (correct behaviour).

Workaround

- To avoid a single trial of a remote answer in this case, set MOFCR.FRREN = 1_B and MOFGPR.CUR = this object.

MultiCAN_TC.035 Different bit timing modes

Bit timing modes (NFCRx.CFMOD=10_B) do not conform to the specification.

When the modes 001_B-100_B are set in register NFCRx.CFSEL, the actual configured mode and behaviour is different than expected.

Table 13

Bit timing mode (NFCR.CFSEL) according to spec	Value to be written to NFCR.CFSEL instead	Measurement
001_B	Mode is missing (not implemented) in MultiCAN	Whenever a recessive edge (transition from 0 to 1) is monitored on the receive input the time (measured in clock cycles) between this edge and the most recent dominant edge is stored in CFC.
010_B	011_B	Whenever a dominant edge is received as a result of a transmitted dominant edge the time (clock cycles) between both edges is stored in CFC.
011_B	100_B	Whenever a recessive edge is received as a result of a transmitted recessive edge the time (clock cycles) between both edges is stored in CFC.
100_B	001_B	Whenever a dominant edge that qualifies for synchronization is monitored on the receive input the time (measured in clock cycles) between this edge and the most recent sample point is stored in CFC.

Workaround

None.

MultiCAN_TC.037 Clear MSGVAL

Correct behaviour:

When MSGVAL is cleared for a message object in any list, then this should not affect the other message objects in any way.

Message reception (wrong behaviour):

Assume that a received CAN message is about to be stored in a message object A, which can be a standard message object, FIFO base, FIFO slave, gateway source or gateway destination object.

If during of the storage action the user clears MOCTR.MSGVAL of message object B in any list, then the MultiCAN module may wrongly interpret this temporarily also as a clearing of MSGVAL of message object A. The result of this is that the message is not stored in message object A and is lost. Also no status update is performed on message object A (setting of NEWDAT, MSGLST, RXPND) and no message object receive interrupt is generated. Clearing of MOCTR.MSGVAL of message object B is performed correctly.

Message transmission (wrong behaviour):

Assume that MultiCAN is about to copy the message content of a message object A into the internal transmit buffer of the CAN node for transmission.

If during of the copy action the user clears MOCTR.MSGVAL of message object B in any list, then the MultiCAN module may wrongly interpret this also as a clearing of MSGVAL of message object A. The result of this is that the copy action for message A is not performed, bit NEWDAT is not cleared and no transmission takes place (clearing MOCTR.MSGVAL of message object B is performed correctly). In case of idle CAN bus and the user does not actively set the transmit request of any message object, this may lead to not transmitting any further message object, even if they have a valid transmit request set.

Single data transfer feature:

When the MultiCAN module clears MSGVAL as a result of a single data transfer (MOFCR.SDT = 1 in the message object), then the problem does not occur. The problem only occurs if MSGVAL of a message object is cleared via CPU.

Workaround

Do not clear MOCTR.MSGVAL of any message object during CAN operation. Use bits MOCTR.RXEN, MOCTR.TXEN0 instead to disable/reenable reception and transmission of message objects.

MultiCAN_TC.038 Cancel TXRQ

When the transmit request of a message object that has won transmit acceptance filtering is cancelled (by clearing MSGVAL, TXRQ, TXEN0 or TXEN1), the CAN bus is idle and no writes to MOCTR of any message object are performed, then MultiCAN does not start the transmission even if there are message objects with valid transmit request pending.

Workaround

To avoid that the CAN node ignores the transmission:

- take a dummy message object, that is not allocated to any CAN node. Whenever a transmit request is cleared, set TXRQ of the dummy message object thereafter. This retriggers the transmit acceptance filtering process.

or:

- whenever a transmit request is cleared, set one of the bits TXRQ, TXEN0 or TXEN1, which is already set, again in the message object for which the transmit request is cleared or in any other message object. This retriggers the transmit acceptance filtering process.

OCDS_TC.007 DBGSR writes fail when coincident with a debug event

When a CSFR write to the DBGSR occurs in the same cycle as a debug event, the write data is lost and the DBGSR updates from the debug event alone.CSFR writes can occur as the result of a MTCR instruction or an FPI write transaction from an FPI master such as Cerberus.

Workaround

Writes to the DBGSR cannot be guaranteed to occur. Following a DBGSR write the DBGSR should be read to ensure that the write was successful, and take an appropriate action if it was not. The action of the simultaneous debug event will have to be considered when determining whether to repeat the DBGSR write, do nothing, or perform some other sequence.

Writes to the DBGSR are almost always to put the TriCore either into, or out of, halt mode. Since the TriCore can not release itself from halt mode, and only rarely puts itself into halt mode, DBGSR writes are usually made by Cerberus.

Example 1 The processor executes a MFCR instruction when a DBGSR write from Cerberus occurs that attempts to put the core into halt mode. The core register debug event occurs and CREVT.EVTA = 001B so the breakout signal is pulsed. The write from Cerberus is unsuccessful and TriCore continues executing. Implementing the workaround, Cerberus reads the DBGSR to check that halt mode has been entered. Since this time it has not, the DBGSR write is repeated as is the read. If the read now indicates that the second DBGSR write was successful and TriCore is now in halt mode, the process driving Cerberus may continue.

Example 2 The processor executes a DEBUG instruction when a DBGSR write from Cerberus occurs that attempts to put the core into halt mode. The software debug event occurs and SWEVT.EVTA = 010B so TriCore enters halt mode and the breakout signal is pulsed. The write from Cerberus did not occur, but the TriCore does enter halt mode. Cerberus reads DBGSR and continues since the TriCore is now halted.

Example 3 The processor is halted, an external debug event occurs when a DBGSR write from Cerberus occurs that attempts to release the core from halt mode. The external debug event occurs and EXEVT.EVTA = 001B so the breakout signal is pulsed. The write from Cerberus does not occur and TriCore remains in halt mode. Cerberus reads DBGSR to determine if its write was successful, it was not, so it repeats the write. This time the write was successful, and TriCore is released from halt. Cerberus reads the DBGSR to confirm that the second write succeeded and moves on.

OCDS_TC.008 Breakpoint interrupt posting fails for ICR modifying instructions

BAM debug events with breakpoint interrupt actions which occur on instructions which modify ICR.CCPN or ICR.IE can fail to correctly post the interrupt. The breakpoint interrupt is either taken or posted based on the ICR contents before the instruction before the instruction rather than after the instruction, as required for a BAM debug event. The breakpoint interrupt may be posted when it should be taken or vice versa.

BAM breakpoint interrupts occurring on an MTCR, SYSCALL, RET, RFE, RSLCX, LDLCX and LDUCX instructions may be affected.

Workaround

None.

OCDS_TC.009 Data access trigger events unreliable

Trigger events set on data accesses do not fire reliably. Whilst they may sometimes successfully generate trigger events, they often will not.

Workaround

None.

Debug triggers should only be used to create trigger events on instruction execution.

OCDS_TC.010 DBGSR.HALT[0] fails for separate resets

When TriCore's main reset and debug reset are not asserted together DBGSR.HALT[0] can fail to indicate whether the CPU is in halt mode or not. This is because the halt mode can be entered or exited when a main reset occurs, depending on the boot halt signal. However DBGSR is reset when debug reset is asserted.

Example 1 TriCore is in halt mode and DBGSR.HALT[0] = '1'. The main reset signal is asserted, and boot halt is negated, so TriCore is released from halt

mode. However, because debug reset was not asserted DBGSR.HALT[0] = ’1’ incorrectly.

Example 2 TriCore is executing code (not in halt mode) and DBGSR.HALT[0] = ’0’. The main reset signal is asserted, and boot halt is asserted, so TriCore enters halt mode. However, because debug reset was not asserted DBGSR.HALT[0] = ’0’ incorrectly.

Example 3 TriCore is in halt mode and DBGSR.HALT[0] = ’1’. The debug reset signal is asserted, whilst the main reset is not. TriCore remains in halt mode, however, DBGSR.HALT[0] = ’0’ incorrectly.

Workaround

None.

OCDS_TC.011 Context lost for multiple breakpoint traps

Context lost for multiple breakpoint trapsOn taking a debug trap TriCore saves a fast context (PCX,PSW,A10,A11) at the location defined by the DCX register. The DCX location is only able to store a single fast context.

When a debug event has occurred which causes a breakpoint trap to occur TriCore executes the monitor code. If another debug event with a breakpoint trap action occurs,a new fast context will be written to the location defined in the DCX and the original fast context will be lost.

Workaround

There are two parts of this workaround. Both parts must be adhered to.

1. External debug events must not be setup to have breakpoint trap actions.

2. Do not allow non-external (trigger, software and core register) debug events with breakpoint trap actions to occur within monitor code. So trigger events, software debug events, with breakpoint trap actions should not be set on the monitor code. So long as the debug events have non breakpoint actions they may be set to occur in the monitor code.

OCDS_TC.012 Multiple debug events on one instruction can be unpredictable

When more than one debug event is set to occur on a single instruction, the debug event priorities should determine which debug event is actually generated. However these priorities have not been implemented consistently.

Note: This only affects events from the trigger event unit and events from DEBUG, MTCR and MFCR instructions. The behaviour of the external debug event is not modified by this erratum.

Workaround

Trigger events must not be set to occur on DEBUG, MTCR and MFCR instructions, or on instructions which already have a trigger event set on them.

PMI_TC.001 Deadlock possible during Instruction Cache Invalidation

Deadlock of the TriCore1 processor is possible under certain circumstances when an instruction cache invalidation operation is performed. Instruction cache invalidation is performed by setting the `PMI_CON1.CCINV` special function register bit, then clearing this bit via software. Whilst `PMI_CON1.CCINV` is active the instruction Tag memories are cleared and new instruction fetches from the LMB are inhibited. Dependent upon the state of the instruction fetch bus master state machine this may lead to system deadlock, since it may not be possible to fetch the instruction to clear the `PMI_CON1.CCINV` bit if this sequence is executed from LMB based memory.

Workaround

The set and clear of the `PMI_CON1.CCINV` bit must be performed by code executing from program scratchpad memory.

PMU_TC.010 ECC wait state feature not functional

The ECC wait state feature is not functional.

The problem occurs under following conditions:

- ECC wait state feature enabled
- A double bit error occurs

For the Data Flash in a special internal data transfer mode (Data Flash block transfers) this could lead to a bus hang.

For the Program Flash block transfers do not lead to a bus hang (no bus trap is generated) and the wrong data will be delivered.

Workaround

1. Do not use ECC wait state feature for data and program flash (set `FCON.WSECPF` and `FCON.WSECDF` to "0").
2. If this feature is required: use interrupt mechanism for double bit error detection and do not enable bus error detection for flash accesses (to prevent bus hangup for data flash).

PWR_TC.010 Pull down on $\overline{\text{TRST}}$_N required

In the current user documentation, there is no requirement for an external pull-down for $\overline{\text{TRST}}$ explicitly defined. Nevertheless it is required to implement an external pull down at this pin. If left externally unconnected, the JTAG reset domain might be not properly initialized at startup. As a side effect, the PLL free run frequency sporadically gets higher than the maximum specified operating frequency. Therefore the system clock may cause a permanent hang up of the boot program execution.

Workaround

Implementation of an external pull down at $\overline{\text{TRST}}$ is required.

SCU_TC.001 Reading SCU_PTDATx not correct when PTMEM=0

The documentation states that reading the pad test data registers (SCU_PTDATx) when the pad test mode is disabled (SCU_PTCON.PTMEN=0) will return the logic level of the corresponding pin. This is not the case. In reality the content of these registers will be returned instead.

Workaround

To read the logic level of the corresponding pin, the pad test mode has to be enabled..

SCU_TC.015 Occurrence of unexpected parity error

When parity protection is enabled after setting of bit SCU_PETCR.PENx, unexpected parity errors could occur.

Workaround

To prevent such errors, initialize the DMI memory range from D000 0000_H - D000 $DFFF_H$ (56 KBytes), and the PMI memory range from D400 0000_H - D400 $3FFF_H$ (16 KBytes) when accessing from the LMB bus. To access from the SPB bus, initialize the DMI memory range from E840 0000_H - E840 $DFFF_H$ (56 KBytes), and the PMI memory range from E850 0000_H - E850 $3FFF_H$ (16 KBytes).

SSC_AI.020 Writing SSOTC corrupts SSC read communication

Programming a value different from 0 to register SSOTC if SSC module operates in Slave Mode corrupts the comunication data.

Workaround

Don't program SSOTC different from 0 in Slave Mode.

SSC_AI.021 Error detection mechanism difference among implementation and documentation.

The SSC is able to detect four different error conditions. Receive Error and Phase Error are detected in all modes, while Transmit Error and Baud Rate Error apply to Slave Mode only. In case of a Transmit Error or Receive Error, the respective error flags are set and the error interrupt requests will be generated by activating the EIR line only if the corresponding error enable bits

have been set. In case of a Phase Error or Baud Rate Error, the respective error flags are always set and the error interrupt requests will be generated by activating the EIR line only if the corresponding error enable bit has been set. The error interrupt handler may then check the error flags to determine the cause of the error interrupt. The error flags are not reset automatically, but must be cleared via register EFM after servicing. This allows servicing of some error conditions via interrupt, while others may be polled by software. The error status flags can be set and reset by software via the error flag modification register EFM.

Note: The error interrupt handler must clear the associated (enabled) error flag(s) to prevent repeated interrupt requests. The setting of an error flag by software does not generate an interrupt request.

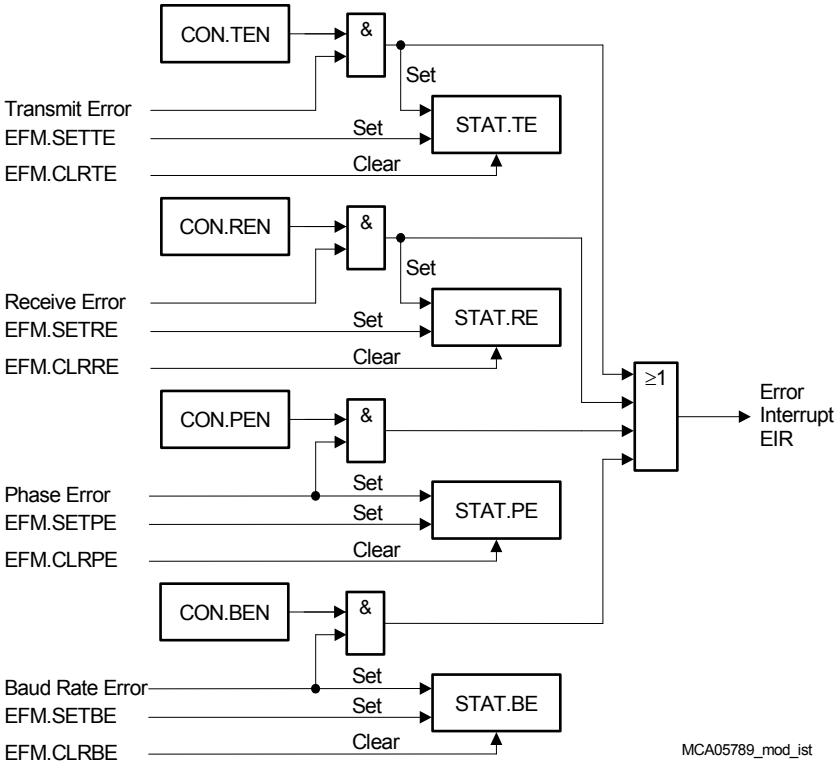

Figure 8 SSC Error Interrupt Control

A **Receive Error** (Master or Slave Mode) is detected when a new data frame is completely received, but the previous data was not read out of the receive buffer register `RB`. If enabled via `CON.REN`, this condition sets the error flag `STAT.RE` and activates the error interrupt request line EIR. The old data in the receive buffer `RB` will be overwritten with the new value and is unretrievably lost.

A **Phase Error** (Master or Slave Mode) is detected when the incoming data at pin MRST (Master Mode) or MTSR (Slave Mode), sampled with the same frequency as the module clock, changes between one cycle before and two cycles after the latching edge of the shift clock signal SCLK. This condition sets the error status flag `STAT.PE` and, if enabled via `CON.PEN`, the error interrupt request line EIR.

Note: When CON.PH = 1, the data output signal may be disturbed shortly when the slave select input signal is changed after a serial transmission, resulting in a phase error.

A **Baud Rate Error** (Slave Mode) is detected when the incoming clock signal deviates from the programmed baud rate (shift clock) by more than 100%, meaning it is either more than double or less than half the expected baud rate. This condition sets the error status flag STAT.BE and, if enabled via CON.BEN, the EIR line. Using this error detection capability requires that the slave's shift clock generator is programmed to the same baud rate as the master device. This feature detects false additional pulses or missing pulses on the clock line (within a certain frame).

Note: If this error condition occurs and bit CON.REN = 1, an automatic reset of the SSC will be performed. This is done to re-initialize the SSC, if too few or too many clock pulses have been detected.

Note: This error can occur after any transfer if the communication is stopped. This is the case due to the fact that SSC module supports back-to-back transfers for multiple transfers. In order to handle this the baud rate detection logic expects after a finished transfer immediately a next clock cycle for a new transfer.

If baud rate error is enabled and the transmit buffer of the slave SSC is loaded with a new value for the next data frame while the current data frame is not yet finished, the slave SSC expects continuation of the clock pulses for the next data frame transmission immediately after finishing the current data frame. Therefore, if the master (shift) clock is not continued, the slave SSC will detect a baud rate error. Note that the master SSC does not necessarily send out a continuous shift clock in the case that it's transmit buffer is not yet filled with new data or transmission delays occur.

A **Transmit Error** (Slave Mode) is detected when a transfer was initiated by the master (shift clock becomes active), but the transmit buffer TB of the slave was not updated since the last transfer. If enabled via CON.TEN, this condition sets the error status flag STAT.TE and activates the EIR line. If a transfer starts while the transmit buffer is not updated, the slave will shift out the 'old' contents of the shift register, which is normally the data received during the last transfer. This may lead to the corruption of the data on the transmit/receive line in half-

duplex mode (open-drain configuration) if this slave is not selected for transmission. This mode requires that slaves not selected for transmission only shift out ones; thus, their transmit buffers must be loaded with $FFFF_H$ prior to any transfer.

Note: A slave with push/pull output drivers not selected for transmission will normally have its output drivers switched off. However, to avoid possible conflicts or misinterpretations, it is recommended to always load the slave's transmit buffer prior to any transfer.

The cause of an error interrupt request (receive, phase, baud rate, transmit error) can be identified by the error status flags in control register CON.

Note: In contrast to the EIR line, the error status flags STAT.TE, STAT.RE, STAT.PE, and STAT.BE, are not reset automatically upon entry into the error interrupt service routine, but must be cleared by software.

Workaround

None.

SSC_AI.022 Phase error detection switched off too early at the end of a transmission

The phase error detection will be switched off too early at the end of a transmission. If the phase error occurs at the last bit to be transmitted, the phase error is lost.

Workaround

Don’t use the phase error detection.

SSC_AI.023 Clock phase control causes failing data transmission in slave mode

If SSC_CON.PH = 1 and no leading delay is issued by the master, the data output of the slave will be corrupted. The reason is that the chip select of the

master enables the data output of the slave. As long as the chip is inactive the slave data output is also inactive.

Workaround

A leading delay should be used by the master.

A second possibility would be to initialize the first bit to be sent to the same value as the content of `PISEL.STIP`.

SSC_AI.024 SLSO output gets stuck if a reconfig from slave to master mode happens

The slave select output SLSO gets stuck if the SSC will be re-configured from slave to master mode. The SLSO will not be deactivated and therefore not correct for the 1st transmission in master mode. After this 1st transmission the chip select will be deactivated and working correctly for the following transmissions.

Workaround

Ignore the 1st data transmission of the SSC when changed from slave to master mode.

SSC_AI.025 First shift clock period will be one PLL clock too short because not syncronized to baudrate

The first shift clock signal duration of the master is one PLL clock cycle shorter than it should be after a new transmit request happens at the end of the previous transmission. In this case the previous transmission had a trailing delay and an inactive delay.

Workaround

Use at least one leading delay in order to avoid this problem.

SSC_AI.026 Master with highest baud rate set generates erroneous phase error

If the SSC is in master mode, the highest baud rate is initialized and CON.PO = 1 and CON.PH = 0 there will be a phase error on the MRST line already on the shift edge and not on the latching edge of the shift clock.

- Phase error already at shift edge
  The master runs with baud rate zero. The internal clock is derived from the rising and the falling edge. If the baud rate is different from zero there is a gap between these pulses of these internal generated clocks.
  However, if the baud rate is zero there is no gap which causes that the edge detection is to slow for the "fast" changing input signal. This means that the input data is already in the first delay stage of the phase detection when the delayed shift clock reaches the condition for a phase error check. Therefore the phase error signal appears.
- Phase error pulse at the end of transmission
  The reason for this is the combination of point 1 and the fact that the end of the transmission is reached. Thus the bit counter SSCBC reaches zero and the phase error detection will be switched off.

Workaround

Don't use a phase error in master mode if the baud rate register is programmed to zero (SSCBR = 0) which means that only the fractional divider is used.
Or program the baud rate register to a value different from zero (SSCBR > 0) when the phase error should be used in master mode.

SSC_TC.009 SSC_SSOTC update of shadow register

The beginning of the transmission (activation of SLS) is defined as a trigger for a shadow register update. This is true for SSOC and most Bits of SSOTC, but not necessarily for Bits 1 and 0 (Leading Delay), since the decision, whether leading cycles have to be performed, has to be made before.

The current implementation does not take the actual SSCOTC values into account (i.e. if trailing and/or inactive cycles have to be performed and would allow a later update), but performs the update just before the earliest possible

occurrence of a leading cycle. This means the update of SSOTC(1:0) is done at the end of the last shift cycle of the preceding transmission.

Workaround

If during a continuous transmission the value for SSOTC.LEAD has to be changed, the update of SSOTC has to be done before the transmission is completed (internal trigger for receive interrupt) in order to get valid timely for the next transmission.

SSC_TC.010 SSC not suspended in granted mode

SSC does not switch off the shift clock in granted mode when suspended, normal operation continues.

Workaround

Use immediate suspend instead (FDR.SM = 1).

SSC_TC.011 Unexpected phase error

If SSCCON.PH = 1 (Shift data is latched on the first shift clock edge) the data input of master should change on the second shift clock edge only. Since the slave select signals change always on the 1st edge and they can trigger a change of the data output on the slave side, a data change is possible on the 1st clock edge.

As a result of this configuration the master would activate the slave at the same time as it latches the expected data. Therefore the first data latched is might be wrong.

To avoid latching of corrupt data, the usage of leading delay is recommended. But even so a dummy phase error can be generated during leading, trailing and inactive delay, since the check for a phase error is done with the internal shift clock, which is running during leading and trailing delay even if not visible outside the module.

If external circuitry (pull devices) delay a data change in slave_out/master_in after deactivation of the slave select line for n*(shift_clock_perid/2) then a dummy phase error can also be generated during inactive delay, even if SSCCON.PH = 0.

Workaround

Don't evaluate phase error flag SSCSTAT.PE. This is no restriction for standard applications (the flag is implemented for test purpose).

SSC_TC.017 Slaveselect (SLSO) delays may be ignored

In master mode, if a transmission is started during the period between the receive interrupt is detected and the STAT.BSY bit becomes disabled (that is to say, the period while the former communication has not yet been completed), all delays (leading, trailing and inactive) may be ignored for the next transmission.

Workaround

Wait for the STAT.BSY bit to become disabled before starting next transmission. There are two ways:

1. Implement in CPU a function to poll STAT.BSY.
2. Implement a timer to wait t_{SLSOT}+t_{SLSOI} and then poll STAT.BSY as in (1). Overall polling time is significantly reduced, because BSY will not be disabled before the mentioned time frame.

3 Deviations from Electrical- and Timing Specification

ESD_TC.P001 ESD violation

In the data sheet the ESD strength based on human body model is specified as:

Secure Voltage Range V_{HBM} = 0V - 2000 V.

The real secure ESD Voltage ranges of the part have been measured to be:

Secure Voltage Range V_{HBM} =0 - 800 V

Secure Voltage Range V_{CDM} =0 - 400V

Care has to be taken that these voltage limits are not exceeded during handling of the parts

FADC_TC.P001 Offset Error during Overload Condition in Single-Ended Mode

Problem Description

When using a FADC channel in single-ended mode, an overload condition at the disabled input of the same channel increases the offset error. In case of a system fault when the disabled FADC input (ENx = 0) gets an overload condition, the offset error of the enabled input (ENx = 1) of the used channel amplifier exceeds the specified value. The offset error of an adjacent channel amplifier is not affected. When using a FADC channel in differential-mode the offset error stays within the specified range.

Effects to the System

An overload condition can only occur in case of a system malfunction when the input voltage of the FADC input pin exceeds the specified range. The effect of an overload condition to the device life time is described in the Overload Addendum ("TC1796 Pin Reliability in Overload"). In single-ended mode an overload condition at the disabled FADC input causes an offset voltage to the

measured input signal at the enabled FADC input, which leads to an increased offset error. The influence of the overload condition to the conversion result can be very high. The measured typical additional offset values at nominal conditions are shown in the table below. The values have to be added to the specified offset error.

Table 14 Relation between Overload Current and additional Offset Error for N channel

Overload current I_{OV} @ FAINxP [mA]	**0.05**	**0.1**	**0.5**	**1**	**-0.05**	**-0.1**	**-0.5**	**-1**
Additional offset error EA_{OFF_N} [LSB]	30	40	65	70	-4	-6	-12	-13

Table 15 Relation between Overload Current and additional Offset Error for P channel

Overload current I_{OV} @ FAINxN [mA]	**0.05**	**0.1**	**0.5**	**1**	**-0.05**	**-0.1**	**-0.5**	**-1**
Additional offset error EA_{OFF_P} [LSB]	-30	-40	-65	-70	4	6	12	13

All currents flowing into the device are positive. All currents flowing out of the device are negative. The values in the table are valid for gain = 1. For other gain values the offset error has to be multiplied with the gain value.

Workaround

- There is no workaround which can be used in case of an overload condition.
- It is recommended to avoid overload condition at FADC inputs in single-ended mode to prevent increased offset error factor.

MLI_TC.P001 Signal time deviates from specification

The measured timing of the MLI inputs setup to RCLK falling edge is t_{36min}=6,5ns. This violates the Data Sheet value (t_{36min}=4ns).

The measured timing of the MLI inputs hold to RCLK falling edge is t_{37min}=5ns. This violates the Data Sheet value (t_{37min}=4ns).

The measured timing of the RReady output delay from RCLK falling edge is t_{38max}=12ns. This violates the Data Sheet value (t_{38max}=8ns).

Workaround

none

PORTS_TC.P001 Output Rise/Fall Times

Based on characterization results, the following rise/fall times apply:

Table 16 Output Rise/Fall Times

Parameter	MaxLimit (ns)	Test Conditions
Class A2 Pads		
Rise/fall times Class A2 pads	3.6	strong driver, sharp edge, 50 pF
	6.3	strong driver, sharp edge, 100 pF
	6.0	strong driver, med. edge, 50 pF
Class A3 Pads		
Rise/fall times Class A3 pads	3.2	50 pF
Class A4 Pads		
Rise/fall times Class A4 pads	2.2	25 pF

PWR_TC.P009 High cross current at OCDS L2 ports during power up

During power up, high cross current may flow through the OCDS L2 ports. This is due to the fact that the behavior of the OCDS L2 ports is not predictable until the core supply voltage reaches at least 0.5 V. Below this voltage, the control signals to these pads are not valid and therefore the drivers nmos & pmos transistors can both drive.

In case that all OCDS L2 pins have both transistors driving, the current may reach values up to 480 mA.

This effect may only take place during power up. It can not happen during power down or power fail.

The consequence of this high current is that the OCDS L2 port may be damaged, and that operation over lifetime can not be guaranteed with high cross currents.

Workaround

The power up sequence defined in the data sheet has to be additionally constrained. The following table classifies the V_{DD}/V_{DDP} ranges concerning cross-current severity.

Table 17 Cross current specification

V_{DD}	V_{DDP}	Comment
> 0.5 V	don't care	no problem
< 0.5 V	< 0.8 V	no problem
< 0.5 V	> 0.8 V & < 1.0 V	30 mA < I_{DDP}< 60 mA
< 0.5 V	> 1.0 V	I_{DDP} up to 480 mA

The power up sequence has to avoid too high I_{DDP} currents, while considering the latch up condition (following **PWR_TC.P010** recommendations).

A more detailed evaluation of the possible currents in the case that 0.8 V < V_{CCP} <1.2 V is shown in the table below.

Table 18 Cross current specification for V_{DD} < 0.5 V

Cross current threshold voltage V_{CCP}	Maximum I_{DDP} cross current
0.8 V	30 mA
0.9 V	50 mA
1.0 V	60 mA
1.2 V	100 mA

Reliability risk

If V_{DD} < 0.5 V, V_{CCP} must be <= 1.2 V to avoid reliability risk. No risk was found for V_{CCP} = 1.2 V with 30 ms-long cross current pulses and 2.5 million power-ups @ 127°C.

PWR_TC.P010 Power sequence

There is a reliability risk for the ADC module and the DTS (Die Temperature Sensor) due to cross-current at power up and power down.

As per Data Sheet, V_{DD} - V_{DDP} < 0.5 V has to be valid at any time in order to avoid increased latch-up risk. The figure below shows the possible V_{DDP} values as shaded region for an exemplary V_{DD} ramp. Moreover, the following rules apply:

- All analog voltages (V_{DDOSC3}, V_{DDM}, V_{DDMF}, V_{DDFL3}) must also follow V_{DDP} power up sequence.
- V_{DDAF}, V_{DDOSC} must follow V_{DD} power up sequence.
- The absolute value of the maximum allowed deviation between any two supplies is 0.5 V until the supplies have reached their final value as defined in the operating conditions.

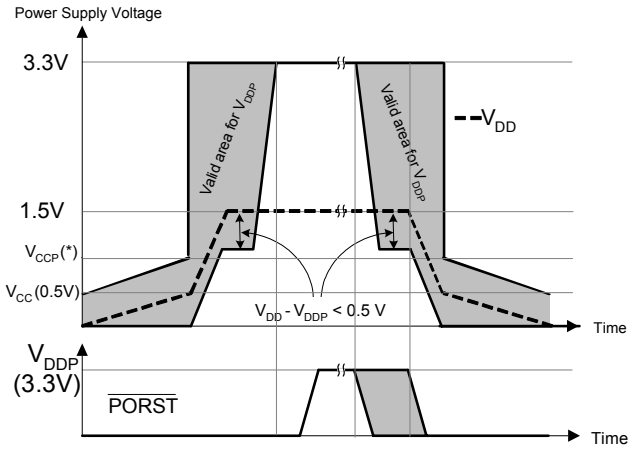

Figure 9 Exemplary power up sequence

Reliability risk

The violation of the parallel power sequencing for any supply is allowed for a maximum of 4% of the operational lifetime, before encountering a reliability risk. Additionally, for a maximum of 4% of the operational lifetime it is allowed to have V_{AREF} supplied while the 1.5V supplies have not reached a value as defined in the operating conditions.

Application Hint

3.3V power supplies are connected with antiparallel ESD protection diodes. Therefore during power sequencing care must be taken to avoid cross currents (e.g. by tristating deactivated supply outputs), either by:

- Actively driving those pins with a voltage difference smaller than 0.5V.
- Keeping them all inactive, which also avoids that external components are supplied from the device.

In addition, it is not allowed to have at any point of time the voltage on V_{AREF} (resp. V_{FAREF}) actively driven with more than 0.5V higher than V_{DDM} (resp. V_{DDMF}).

SSC_TC.P001 SSC signal times t_{52} and t_{53} deviate from the specification

The measured timing of the SSC input MRST setup time is t_{52}=13ns and the MRST hold time is t_{53min}=0ns. This violates the Data Sheet values (t_{52min}=10ns and t_{53min}=5ns).

Workaround

None.

4 Application Hints

ADC_TC.H002 Maximum latency for back to back conversion requests

A maximum latency of more than one complete arbitration-round (which corresponds to 20 ADC-module clock-cycles) can occur between two requested back to back conversions.

Delays from 10 and 26 ADC-module clock-cycles between two conversions have been seen when autoscan or queue are running simultaneously. The seen latency depends on the ratio of conversion-time and arbitration-cycle.

ADC_TC.H004 Single Autoscan can only be performed on Group_0

When bit field SCN.GRPC=11 bit ASCRP.GRPS should toggle at the end of each auto-scan sequence.

In reality the behaviour is as described below:

- Single Auto-Scan (CON.SCNM=01): selected group will always be Group_0 at the beginning of each sequence.
- Continuous Auto-Scan (CON.SCNM=10): selected group will be Group_0 at the beginning of the first sequence, but toggles at the end of each sequence.

ADC_TC.H006 Change of timer reload value

When the timer run bit is active (TCON.TR = 1) and the reload value TCON.TRLD is loaded with zero, the timer will never start again with any other reload value.

Workaround

The reload value for the timer must only be changed if the timer run bit is set to inactive (TCON.TR = 0).

ADC_TC.H007 Channel injection requests overwrite pending requests

Due to the arbitration mechanism an already pending channel injection request is only taken into account at the end of an arbitration round. If a software write action for a new channel injection request occurs before this point in time, it overwrites the already pending request. As a result the requested conversion is started according to the latest request.

In order to avoid overwriting an already pending request a wait-time of at least two arbitration rounds (40 module clock-cycles of f_{CLC}) should be respected between two consecutive channel injection conversion requests.

FLASH_TC.H002 Wait States for PFLASH/DFLASH Read Access

In User's Manual, the bits WSDFLASH [10:8] and WSPFLASH [2:0] are described in the FLASH_FCON register for the setting of the number of wait states (WS).

The recommended number of wait states is depending on the used frequency.

Formula: Frequency [MHz] / number of WS <= 15 [MHz]

To avoid increased double-bit errors at hot read operation, the following WS-settings should be used:

Table 19 Recommended number of wait states (WS)

Frequency ranges	Wait states
<=80 MHz	6 WS
<=75 MHz	5 WS
<=60 MHz	4 WS
<=45 MHz	3 WS (minimum setting allowed)

Only the default setting (110_B) for FCON.WSDFLASH and FCON.WSPFLASH must be used when operating at 80 MHz.

FLASH_TC.H004 Guideline for writing Flash command sequences

User code, that writes command sequences to the Program Flash, should not be executed from the internal Flash; it shall be located in other internal or external program memory, e.g. in the scratchpad SPRAM.

The write cycles, belonging to a command sequence, may be buffered on their way to the Flash in store/write buffers. To maintain data coherency (strictly in-order sequence of command cycles is mandatory) and to guarantee immediate transfer of the command sequence to the PMU, all write cycles to the Flash must access the Flash in its non-cached address space. Additionally, it is recommended to include a dummy read (ld.w) instruction to a PMU register (e.g. PMU_ID) after the last write cycle of a command sequence to flush the write buffers.

Example:

The following sequence implements an "Erase Sector" command sequence, having all Flash addresses located in the non-cached space:

```
MOV e0, #data1 |  ST [a0], e0  | LD.w d15,[a15]0x508
MOV e0, #data2 |  ST [a1], e0  | LD.w d15,[a15]0x508
MOV e0, #data3 |  ST [a0], e0  | LD.w d15,[a15]0x508
MOV e0, #data1 |  ST [a0], e0  | LD.w d15,[a15]0x508
MOV e0, #data2 |  ST [a1], e0  | LD.w d15,[a15]0x508
MOV e0, #data4 |  ST [a2], e0  | LD.w d15,[a15]0x508
LD.w d15,[a15]0x508
```

FLASH_TC.H005 Reset during FLASH logical sector erase

If an erase operation of a 16K-sector (PS0-7) is aborted by any reset, this can affect readability of the whole 128K physical sector (PPS0), which includes the 16K-sector.

As the full or partial user code is located in the affected physical sector (PPS0), the readability of this code might be affected and the start-up sequence may not be possible anymore.

Additionally, when user configuration blocks (1K-sectors UCB0-2) are implemented as logical sectors, they might be affected by this case if they must

be erased due to change of protection parameters. If the UCB erase operation is aborted, the device may get unbootable (braindead).

DFLASH sectors are not affected by this corner case.

Workaround

To protect the user boot code, either:

- Do not erase 16K-sector PS0-7 (logical sectors) and place the complete user boot code within these sectors, or
- Use the Alternate Boot Mode (ABM) as hardware configuration for start-up of the user system and place the backup user code above 128K. In ABM mode, the firmware (in BootROM) executes a CRC check of a memory block (user defined in a primary ABM header, base address A001 $FFE0_H$) which should cover the 16K-sectors range where the core of the user code is located. If CRC check fails within this block due to the described problem above, it will enter a secondary ABM header (base address A003 $FFE0_H$) within the PS8 sector, allowing the device to start-up properly from the backup user code.

Furthermore, after start-up, the aborted 16K-sector erase operation must be repeated by the user code. Therefore, erase operations should be tracked in a static memory not affected by this corner case (e.g. DFLASH, EEPROM). Once the 16K-sector erase operation is successfully completed, the whole affected physical sector is readable again.

There is no workaround for user configuration blocks. These blocks should only be erased when stable conditions can be guaranteed, for instance, during factory end-of-line programming.

GPTA_TC.H002 Range limitation on PLL reload

The PLL reload value `PLLREV` should be handled as unsigned integer. Erroneously, the value is handled as a signed integer value. If values >= 800000_H are stored into the `PLLREV` register, this values will cause an addition with a negative number for the calculation of the new delta value. The

corresponding delta register result therefore might contain still a negative number, causing further unexpected micro-tick pulses on the PLL output.

The described behaviour causes a limitation of the usable reload values to 23 bits.

Please note also the corresponding pseudo code below:

```
if      (Bit 24 of Pll.Delta) then //delta is < 0
        Pll.Delta = Pll.Delta + Pll.Reload_Value
        generate pulse on Pll.Signal_Uncomp
else //delta is >= 0
        Pll.Delta = Pll.Delta + (0xFFFF0000 or (Pll.Step))
endif
```

Workaround

Only reload values <= $7FFFFF_H$ can be used, following that MSB (Bit 23) of `PLLREV` must always be programmed to 0.

GPTA_TC.H003 A write access to GTCXR of disabled GTC may cause an unexpected event

If the next sequence is followed:

1. Read GTCXR to disable write protection
2. Write GTCXR with new value
3. Write GTCCTR to enable the cell and to change the hooked Global Timer GT
4. Write GTCXR with new value to trigger greater-equal compare

An unexpected event may be caused because:

- greater-equal compare is also performed when cell is disabled (it is triggered by first write to GTCXR if the GTC is still hooked to the old Global Timer GT), and
- the result of compare is evaluated with next kernel clock pulse, and
- this result may be positive, and
- the cell may be enabled **before** this next kernel clock pulse, if kernel running slower than FPI bus.

Workaround

Use the next sequence instead:

1. Read GTCXR to disable write protection
2. Write GTCCTR to enable the cell and to change the hooked Global Timer GT
3. Write GTCXR with new value to trigger greater-equal compare

Therefore, the comparison is only triggered when the cell is enabled.

Please use this sequence only if the hooked GT is changed and the Capture Alternate Timer mode (CAT) is enabled. If the compare is always related to the same Global Timer GT, the original sequence must be used to prevent an unintended compare between the captured alternate timer value (assuming Capture Alternate Timer after compare is enabled) and the hooked GT value.

MLI_TC.H002 Received write frames may be overwritten when Move Engine disabled

When a write-frame is sent, the remote controller handles it either via:

- an interrupt (CPU)
- a DMA channel service,
- move engine if automatic mode is enabled (`RCR.MOD`=1),

which copy the content of the received-data buffer (RDATAR) to a specific memory location (defined by RADDR).

If the automatic mode is disabled and if the request is not immediately serviced (CPU busy, FPI bus heavily loaded, etc.), it may happen that the frame is overwritten by another incoming frame.

When the automatic mode is enabled, a hardware protection mechanism prevents the frames from being overwritten.

Workaround

If using the Move Engine in disabled mode, implement frame-acknowledge for write-frames

MLI_TC.H005 Consecutive frames sent twice at reduced baudrate

If frames are transmitted back to back it may happen that transmitted frames are not acknowledged at the first transmission and the transmitter will automatically repeat the transmission. Therefore all frames except the first one are sent twice. No data will be lost.

The problem takes place if the MLI transmit clock is divided by more than a factor of two with respect to the system clock, which means the baudrate is not maximum.

Workaround

1. Set transmit clock to maximum frequency ($f_{SYS}/2$).
2. Insert a delay between transmission of two consecutive frames.

MLI_TC.H006 Deadlock situation when MLI_TCR.RTY=1

The MLI module offers optionally a "Retry" functionality. It is aimed at ensuring data consistency in case blocks of data have to be transferred by a "dumb" move engine which can not react to MLI interrupt events.

If MLI_TCR.RTY = 1_B, any requesting FPI bus master will retry the request (read or write) until it is accepted by the MLI module.

Under certain circumstances (specific access sequence on the FPI bus in conjunction with a non responding MLI partner, etc), this may result in a deadlock situation, where no instruction can be executed anymore.

In this case also traps and interrupts cannot be processed anymore. The deadlock can only be resolved by a hardware reset, power-on reset or a watchdog-timer reset.

Workaround

Always disable automatic retry mechanism by writing MLI_TCR.RTY = 0_B.

The "Retry" functionality is actually not needed in any application. The MLI interrupt events (transmit interrupt, etc.) are sufficient to ensure data

consistency, and therefore should be used to trigger the wanted interrupts, DMA transfers, etc.

MultiCAN_TC.H002 Double Synchronization of receive input

The MultiCAN module has a double synchronization stage on the CAN receive inputs. This double synchronization, delays the receive data by 2 module clock cycles. If the MultiCAN is operating at a low module clock frequencies and high CAN baudrate, this delay may become significant and has to be taken into account when calculating the overall physical delay on the CAN bus (transceiver delay...).

MultiCAN_TC.H003 Message may be discarded before transmission in STT mode

If MOFCRn.STT=1 (Single Transmit Trial enabled), bit TXRQ is cleared (TXRQ=0) as soon as the message object has been selected for transmission and, in case of error, no retransmission takes places.

Therefore, if the error occurs between the selection for transmission and the real start of frame transmission, the message is actually never sent.

Workaround

In case the transmission shall be guaranteed, it is not suitable to use the STT mode. In this case, MOFCRn.STT shall be 0.

MultiCAN_TC.H004 Double remote request

Assume the following scenario: A first remote frame (dedicated to a message object) has been received. It performs a transmit setup (TXRQ is set) with clearing NEWDAT. MultiCAN starts to send the receiver message object (data frame), but loses arbitration against a second remote request received by the same message object as the first one (NEWDAT will be set).

When the appropriate message object (data frame) triggered by the first remote frame wins the arbitration, it will be sent out and NEWDAT is not reset. This leads to an additional data frame, that will be sent by this message object (clearing NEWDAT).

There will, however, not be more data frames than there are corresponding remote requests.

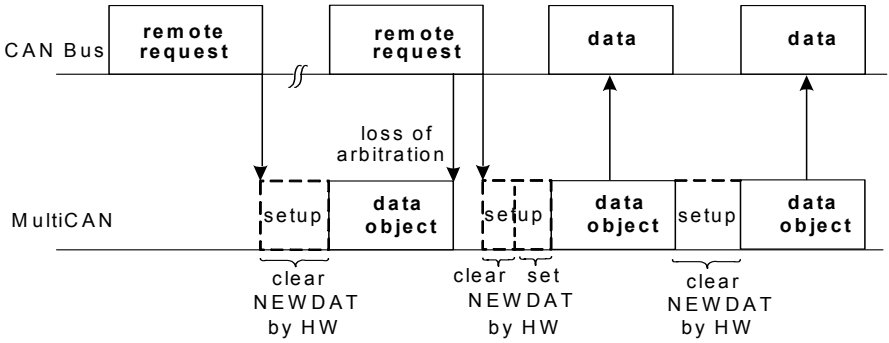

Figure 10 loss of arbitration

PLL_TC.H005 Increasing PLL noise robustness

The PLL robustness to system noise on the PLL supply voltage can be significant improved by increasing NDIV to a value **greater than NDIV = 32** (N = 33). This can be achieved by reducing PLL reference frequency f_P via increasing PDIV. Using N greater than 33 improves the PLL rejection to supply noise in comparison to a N value below N = 33.

The PLL robustness to system noise on the PLL supply voltage can be furtherly improved by using PDIV > 0 (P > 1). An increased P value can prevent PLL unlock because of prolonging the lock-detection window.

Therefore it is strongly recommended to use N values greater than N = 33 and P values greater than P>1 to ensure an optimal PLL noise robustness to supply noise.

Releasing PLL bypass mode during PLL initialization causes an increased V_{DDI} supply current demand because of increasing CPU frequency. Depending on

the quality of supply voltage blocking this can cause an V_{DDI} supply ripple for some µs. The amplitude of the V_{DDI} supply ripple can be reduced by increasing CPU frequency step by step. This can be achieved by reducing KDIV value from 16 down to target value. After releasing PLL bypass mode and between changing KDIV values it is necessary to wait until V_{DDI} supply is faded away. The waiting period depends mainly on supply and supply blocking but a typical value is about 5µs.

Example sequence with f_{OSC} = 20MHz and f_{CPU} = 80MHz

1. set VCO Bypass
2. disconnect oscillator from PLL
3. set P=2, N=64, VCOband=10 (600-700MHz), K=16
4. connect oscillator to PLL
5. wait for lock
6. release VCO Bypass (f_{CPU} = 40 MHz)
7. wait ~5µs (wait until supply ripple caused by increased supply current is faded away)
8. set K=10 (f_{CPU}=64MHz)
9. wait ~5µs (wait until supply ripple caused by increased supply current is faded away)
10. set K=8 (f_{CPU}=80MHz]
11. wait ~5µs (wait until supply ripple caused by increased supply current is faded away)

SCU_TC.H001 Automatic temperature compensation not usable

The internal mechanism for automatic temperature compensation is not usable. It is possible to use temperature compensation under SW control.

SCU_TC.H003 RTID value of device

The RTID value for this device step is 00000011.