S28HS256T / S28HS512T / S28HS01GT
S28HL256T / S28HL512T / S28HL01GT

256-Mb (32-MB), 512-Mb (64-MB) 1-Gb (128-MB) HS-T (1.8-V), HL-T (3.0-V) Semper™ Flash with Octal Interface

Device Overview

Architecture

- Cypress 45-nm MirrorBit® technology that stores two data bits in each memory array cell
- Sector Architecture options
  - Uniform: Address space consists of all 256 KB Sectors
  - Hybrid:
    - Configuration 1 - Address space consists of thirty-two 4 KB sectors grouped either on the top or the bottom while the remaining sectors are all 256 KB
    - Configuration 2 - Address space consists of thirty-two 4 KB sectors equally split between top and bottom while the remaining sectors are all 256 KB
- Page Programming buffer of 256 or 512 bytes
- OTP Secure Silicon array of 1024 bytes (32 × 32 bytes)

Interface

- Octal Interface (8S-8S-8S, 8D-8D-8D)
  - JEDEC eXpanded SPI (JESD251) compliant
  - SDR option runs up to 200 MBps (200 MHz clock speed)
  - DDR option runs up to 400 MBps (200 MHz clock speed)
  - Supports Data Strobe (DS) to simplify the read data capture in high-speed systems
- Serial Peripheral Interface (1S-1S-1S)
  - JEDEC eXpanded SPI (JESD251) compliant
  - SDR option runs up to 21 MBps (166 MHz clock speed)

Highlights

- Safety Features
  - Functional Safety with the Industry's first ISO26262 ASIL B compliant and ASIL D ready NOR flash
  - EnduraFlex™ Architecture provides High-Endurance and Long Retention Partitions
  - Interface CRC detects errors on communication interface between host controller and Semper™ Flash device
  - Data Integrity CRC detects errors in memory array
  - SafeBoot reports device initialization failures, detects configuration corruption and provides recovery options
  - Built-in Error Correcting Code (ECC) corrects Single-bit Error and detects Double-bit Error (SECDED) on memory array data
  - Sector Erase Status indicator for power loss during erase
- Protection Features
  - Legacy Block Protection for memory array and device configuration
  - Advanced Sector Protection for individual memory array sector based protection
- AutoBoot enables immediate access to the memory array following power-on
- Hardware Reset through CS# Signaling method (JEDEC) OR individual RESET# pin

Identification

- Serial Flash Discoverable Parameters (SFDP) describing device functions and features
- Device Identification, Manufacturer Identification and Unique Identification

Data Integrity

- 256 Mb Devices
  - Min. 640,000 Program-Erase Cycles for the Main array
- 512 Mb Devices
  - Min. 1,280,000 Program-Erase Cycles for the Main array
- 1 Gb Devices
  - Min. 2,560,000 Program-Erase Cycles for the Main array
- All Devices
  - Min. 300,000 Program-Erase Cycles for the 4 KB Sectors
  - Minimum 25 Years Data Retention

Supply Voltage

- 1.7-V to 2.0-V (HS-T)
- 2.7-V to 3.6-V (HL-T)

Grade / Temperature Range

- Industrial (–40 °C to +85 °C)
- Industrial Plus (–40 °C to +105 °C)
- Automotive AEC-Q100 Grade 3 (–40 °C to +85 °C)
- Automotive AEC-Q100 Grade 2 (–40 °C to +105 °C)
- Automotive AEC-Q100 Grade 1 (–40 °C to +125 °C)

Packages

- 256 Mb and 512 Mb:
  - 24-ball BGA 6 × 8 mm
- 1 Gb:
  - 24-ball BGA 8 × 8 mm

Performance Summary

Maximum Read Rates

Transaction	Initial Access Latency (Cycles)	Clock Rate (MHz)	MBps
SPI Read	0	50	6.25
SPI Read Fast	10	166	20.75
Octal Read SDR (HS-T)	16	200	200
Octal Read SDR (HL-T)	14	166	166
Octal Read DDR (HS-T)	23	200	400
Octal Read DDR (HL-T)	20	166	332

Typical Program and Erase Rates

Operation	KBps
256B Page Programming (4 KB Sector / 256 KB Sector)	595 / 533
512B Page Programming (4 KB Sector / 256 KB Sector)	753 / 898
256 KB Sector Erase	331
4 KB Sector Erase	95

Typical Current Consumption

Operation	HL-T Current (mA)	HS-T Current (mA)
SDR Read 50 MHz	10	10
SDR Read (Octal)	75 (166 MHz)	156 (200 MHz)
DDR Read (Octal)	75 (166 MHz)	156 (200 MHz)
Program	50	50
Erase	50	50
Standby	0.014	0.011
Deep Power Down	0.0022	0.0013

Data Integrity

Program / Erase (PE) Endurance - High Endurance (256 KB Sectors)

Sectors in Partition	Minimum PE Cycles	Minimum Retention Time	Unit
512 (Default for 1 Gb devices)	2,560,000	2	Years
508	2,540,000		
504	2,520,000		
...	...		
256 (Default for 512 Mb devices)	1,280,000		
252	1,260,000		
128 (Default for 256 Mb devices)	640,000		
...			
28	140,000		
24	120,000		
20	100,000		

Note Minimum Cycles is for entire High Endurance Partition.

Program / Erase Endurance - Long Retention Partition (256 KB Sectors)

Minimum PE Cycles	Minimum Retention Time	Unit
500	25	Years

Note Minimum Cycles is for each sector.

Program / Erase Endurance 4 KB Sector and Nonvolatile Register Array

Flash Memory Type	Minimum Cycles	Unit	Minimum Retention Time	Unit
Program/Erase cycles per 4 KB sector	500	PE cycles	25	Years
	300,000 **Note** It is required to restrict the power loss events to 300 times per sector during program or erase operation to achieve the mentioned endurance cycles.		2	
Program/Erase cycles per Persistent Protection Bits (PPB) array or nonvolatile register array **Note** Each write transaction to a nonvolatile register causes a PE cycle on the entire nonvolatile register array.	500		25	

Contents

1. Pinout and Signal Description 5

2. Interface Overview 6
2.1 General Description 6
2.2 Signal Protocols 7
2.3 Transaction Protocol 8
2.4 Register Naming Convention 16
2.5 Transaction Naming Convention 16

3. Address Space Maps 17
3.1 Semper Flash Memory Array 17
3.2 ID Address Space 19
3.3 JEDEC JESD216 Serial Flash Discoverable Parameters (SFDP) Space 19
3.4 Secure Silicon Region (SSR) Address Space 19
3.5 Registers 20

4. Features 22
4.1 Error Detection and Correction 22
4.2 EnduraFlex Architecture (Wear Leveling) 25
4.3 Interface CRC 29
4.4 Data Integrity CRC 32
4.5 Data Protection Schemes 33
4.6 SafeBoot 42
4.7 AutoBoot 46
4.8 Read Transactions 46
4.9 Write Transactions 50
4.10 Program 51
4.11 Erase 53
4.12 Suspend and Resume Embedded Operation 55
4.13 Reset 57
4.14 Power Modes 61
4.15 Power Up and Power Down 62

5. Registers 64
5.1 Register Naming Convention 64
5.2 Status Register 1 (STR1x) 65
5.3 Status Register 2 (STR2x) 67
5.4 Configuration Register 1 (CFR1x) 68
5.5 Configuration Register 2 (CFR2x) 69
5.6 Configuration Register 3 (CFR3x) 71
5.7 Configuration Register 4 (CFR4x) 72
5.8 Configuration Register 5 (CFR5x) 74
5.9 Interface CRC Enable Register (ICEV) 74
5.10 Interface CRC Check-value Register (ICRV) 75
5.11 Memory Array Data Integrity Check CRC Register (DCRV) 75
5.12 ECC Status Register (ESCV) 75
5.13 ECC Address Trap Register (EATV) 76
5.14 ECC Error Detection Count Register (ECTV) 76
5.15 Advanced Sector Protection Register (ASPO) 77
5.16 ASP Password Register (PWDO) 78
5.17 ASP PPB Lock Register (PPLV) 78
5.18 ASP PPB Access Register (PPAV) 78
5.19 ASP Dynamic Block Access Register (DYAV) 79
5.20 AutoBoot Register (ATBN) 79
5.21 Sector Erase Count Register (SECV) 80
5.22 INT# Pin Configuration Register (INCV) - Octal Only 80
5.23 INT# Pin Status Register (INSV) - Octal Only 81
5.24 EnduraFlex Architecture Selection Register (EFXx) 82

6. Transaction Table 85
6.1 SPI (1S-1S-1S) Transaction Table 85
6.2 Octal (8S-8S-8S, 8D-8D-8D) Transaction Table 88

7. Electrical Characteristics 91
7.1 Absolute Maximum Ratings 91
7.2 Operating Range 91
7.3 Thermal Resistance 91
7.4 Capacitance Characteristics 91
7.5 Latchup Characteristics 91
7.6 DC Characteristics 92
7.7 AC Test Conditions 94

8. Timing Characteristics 95
8.1 Timing Waveforms 98

9. Device Identification 101
9.1 JEDEC SFDP Rev D 101
9.2 Manufacturer and Device ID 117
9.3 Unique Device ID 117

10. Package Diagrams 118

11. Ordering Information 120
11.1 Valid Combinations — Standard Grade 121
11.2 Valid Combinations — Automotive Grade / AEC-Q100 121

12. Document History Page 122

Sales, Solutions, and Legal Information **123**
Worldwide Sales and Design Support 123
Products 123
PSoC® Solutions 123
Cypress Developer Community 123
Technical Support 123

1. Pinout and Signal Description

Figure 1. 24-Ball BGA Pinout Configuration[1]

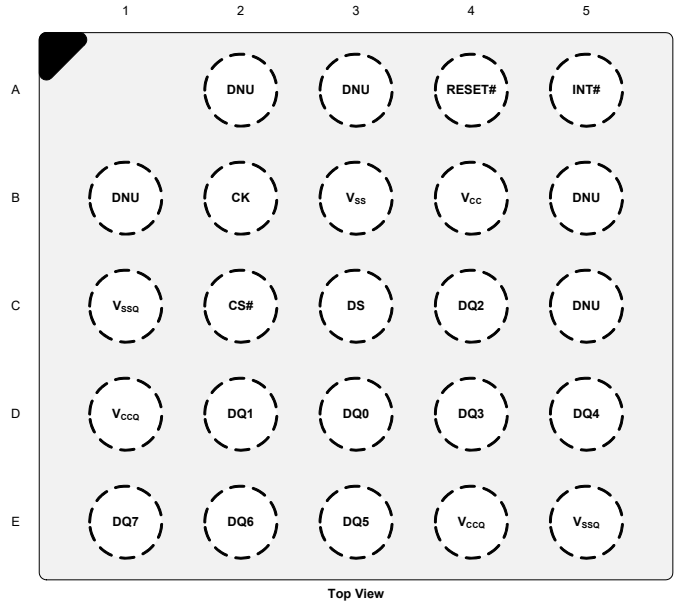

Top View

Table 1. Signal Description

Symbol	Type	Mandatory / Optional	Description
CS#	Input	Mandatory	**Chip Select (CS#).** All bus transactions are initiated with a HIGH to LOW transition on CS# and terminated with a LOW to HIGH transition on CS#. Driving CS# LOW enables the device, placing it in the active mode. When CS# is driven HIGH, the device enters standby mode, unless an internal embedded operation is in progress. All other input pins are ignored and the output pins are put in high impedance state. On parts where the pin configuration offers a dedicated RESET# pin, it remains active when CS# is HIGH.
CK	Input	Mandatory	**Clock (CK)**. Clock provides the timing of the serial interface. Transactions are latched on the rising edge of the clock. In SDR protocol, command, address and data inputs are latched on the rising edge of the clock, while data is output on the falling edge of the clock. In DDR protocol, command, address and data inputs are latched on both edges of the clock, and data is output on both edges of the clock.
DS	Output	Mandatory	**Read Data Strobe (DS)**. DS is used for data read operations only and indicates output data valid for SDR/DDR modes. During a read transaction while CS# is LOW, DS toggles to synchronize data output until CS# goes High.
DQ[7:0]	Input/Output	Mandatory	**Serial Data (DQ[7:0])**. Bidirectional signals that transfer command, address and data information. **Legacy (x1) SPI Interface**: DQ[0] is an input (SI) and DQ[1] is an output (SO). **Octal (x8) Interface**: DQ[7:0] are input and output.
RESET#	Input (weak pull-up)	Optional	**Hardware Reset (RESET#)**. When LOW, the device will self initialize and return to the array read state. DS and DQ[7:0] are placed into the high impedance state when RESET# is LOW. RESET# includes a weak pull-up, meaning, if RESET# is left unconnected it will be pulled up to the HIGH state on its own.
INT#	Output (Open Drain)	Optional	**System Interrupt (INT#)**. When LOW, the device is indicating that an internal event has occurred. This signal is intended to be used as a system level interrupt for the device to indicate that an on-chip event has occurred. INT# is an open-drain output. The recommended pull-up resistor for the INT# outputs is 5 kΩ to 10 kΩ.
V_{CC}	Power supply	Mandatory	Core Power Supply
V_{CCQ}	Power supply	Mandatory	Input / Output Power Supply
V_{SS}	Ground supply	Mandatory	Core Ground
V_{SSQ}	Ground supply	Mandatory	Input / Output Ground
DNU	–	–	**Do Not Use.**

Note
1. Flash memory devices in BGA packages can be damaged if exposed to ultrasonic cleaning methods. The package, data integrity, or both may be compromised if the package body is exposed to temperatures above 150 °C for prolonged periods of time.

2. Interface Overview

2.1 General Description

The Cypress Semper™ Flash Octal family of products are high-speed CMOS, MirrorBit NOR flash devices that are compliant with the JEDEC JESD251 eXpanded SPI (xSPI) specification. Semper Flash is designed for Functional Safety with development according to ISO 26262 standard to achieve ASIL-B compliance and ASIL-D readiness.

Semper Flash with Octal Interface devices support both the Octal Peripheral Interface (OPI) as well as Legacy x1 Serial Peripheral Interface (SPI). Both interfaces serially transfer transactions reducing the number of interface connection signals. SPI supports SDR whereas OPI supports both SDR and DDR.

Read operations from the device are burst oriented. Read transactions can be configured to use either a wrapped or linear burst. Wrapped bursts read from a single page whereas linear bursts can read the whole memory array.

The erased state of each memory bit is a logic 1. Programming changes a logic 1 (HIGH) to a logic 0 (LOW). Only an erase operation can change a memory bit from a 0 to a 1. An erase operation must be performed on a complete sector (4 KBs or 256 KBs).

Semper Flash provides a flexible sector architecture. The address space can be configured as either a uniform 256 KB sector array, or a hybrid configuration 1 where thirty-two 4 KB sectors are either grouped at the top or at the bottom while the remaining sectors are all 256 KB, or a hybrid configuration 2 where the thirty-two 4 KB sectors are equally split between the top and the bottom while the remaining sectors are all 256 KB.

The Page Programming Buffer used during a single programming operation is configurable to either 256 bytes or 512 bytes. The 512 byte option provides the highest programming throughput.

Figure 2. Logic Block Diagram

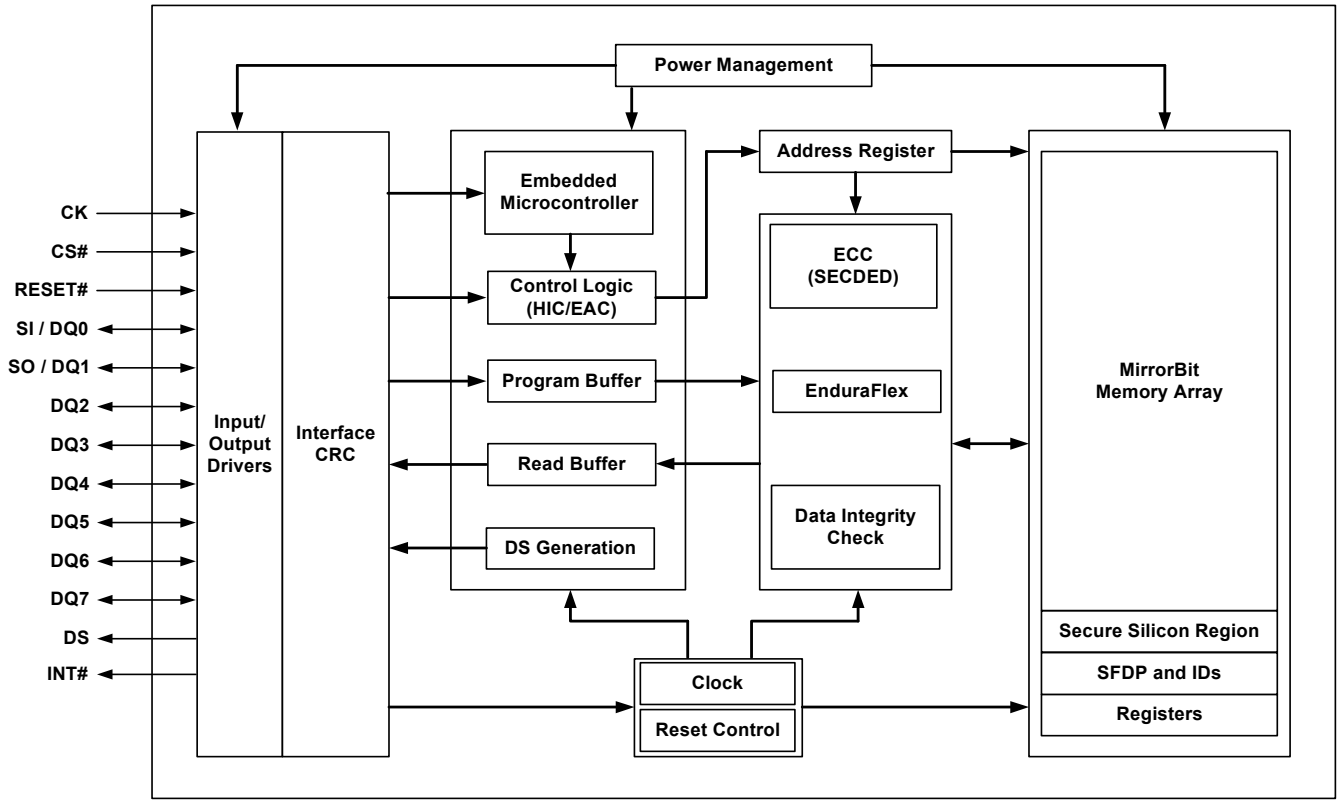

The Semper Flash with Octal Interface family consists of multiple densities with, 1.8V and 3.0V core and I/O voltage options.

The device control logic is subdivided into two parallel operating sections: the Host Interface Controller (HIC) and the Embedded Algorithm Controller (EAC). The HIC monitors signal levels on the device inputs and drives outputs as needed to complete read, program, and write data transfers with the host system. The HIC delivers data from the currently entered address map on read transfers; places write transfer address and data information into the EAC command memory, and notifies the EAC of power transition, and write transfers. The EAC interrogates the command memory, after a program or write transfer, for legal command sequences and performs the related Embedded Algorithms.

Changing the nonvolatile data in the memory array requires a sequence of operations that are part of Embedded Algorithms (EA). The algorithms are managed entirely by the internal EAC. The main algorithms perform programming and erase of the main flash array data. The host system writes command codes to the flash device. The EAC receives the command, performs all the necessary steps to complete the transaction, and provides status information during the progress of an EA.

In addition to the mandatory SPI signals CK, CS#, SI/DQ0, SO/DQ1, and DQ[7:2], the Semper Flash with Octal Interface device also includes RESET#, DS and INT# signals. The RESET# transition from LOW to HIGH returns the device to the default state that occurs after an internal power-on reset (POR). The Data Strobe (DS) is synchronized with the output data during read transactions enabling host system to capture data at high clock frequency operation. The INT# is an open-drain output that can provide an interrupt to the device master to indicate when the device transitions from busy to ready at the end of a program or erase operation or to indicate the detection of an error (ECC) during read.

EnduraFlex™ Architecture provides system designers the ability to customize the NOR Flash endurance and retention for their specific application. The host defines partitions for high endurance or long retention, providing up to 1+ million cycles or 25 years of data retention.

The Semper Flash with Octal Interface device supports error detection and correction by generating an embedded Hamming error correction code during memory array programming. This ECC code is then used for single-bit and double-bit error detection and single-bit correction during read.

The Semper Flash with Octal Interface device has built-in diagnostic features providing the host system with the device status.

- Program and Erase Operation: Reporting of program or erase success, failure and suspend status
- error detection and correction: 1-bit and/or 2-bit error status with address trapping and error count
- Data Integrity Check: Error detection over memory array contents
- Interface CRC: Error detection over device interface
- SafeBoot: Reporting of proper flash device initialization and configuration corruption recovery
- Sector Erase Status: Reporting of erase success or failure status per sector
- Sector Erase Counter: Counts the number of erase cycles per sector

2.2 Signal Protocols

2.2.1 Semper Flash Octal and SPI Clock Modes

The Semper Flash with Octal interface device can be driven by an embedded microcontroller (bus master) in either of the following two clocking modes:

- **Mode 0** with Clock Polarity LOW at the fall of CS# and staying LOW until it goes HIGH at capture input.
- **Mode 3** with Clock Polarity HIGH at the fall of CS# then going LOW to HIGH at capture input.

For these two modes, data is latched into the device on the rising edge of the CK signal in SDR protocol and both edges of the CK signal in DDR protocol. The output data in SDR protocol is available on the falling edge of the CK clock signal and the output data in DDR protocol is available on the rising edge of the CK clock signal.

The difference between the two modes is the clock polarity when the bus master is in Standby mode and not transferring any data.

Figure 3. SPI SDR Mode Support

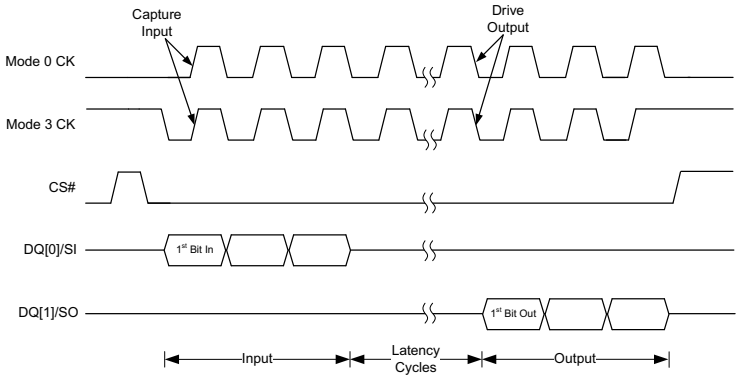

Figure 4. Octal SDR Mode Support

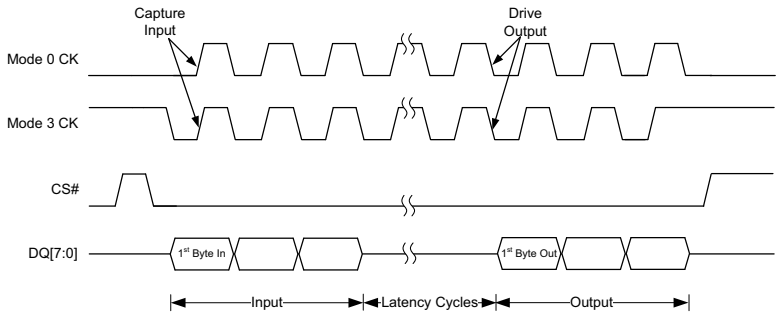

For Semper Flash Octal DDR mode operation, only clock Mode 0 is supported.

Figure 5. Octal DDR Mode Support

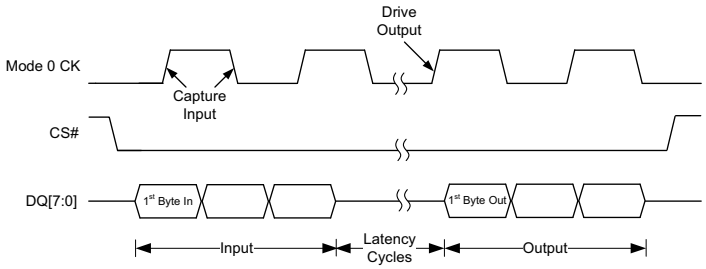

2.3 Transaction Protocol

Transaction

- During the time that CS# is active (LOW), the clock signal (CK) is toggled while command information is first transferred on the data (DQ) signals followed by address and data from the host to the flash device. The clock continues to toggle during the transfer of read data from the flash device to the host or write data from the host to the flash device. When the host has transferred the desired amount of data, the host drives the CS# inactive (HIGH). The period during which CS# is active is called a transaction on the bus.
- While CS# is inactive, the CK is not required to toggle.
- The command transfer occurs at the beginning of every transaction. The address, latency cycles, and data transfer phases are optional and their presence depends on the protocol mode or command transferred.

Transaction Capture

- CK marks the transfer of each bit or group of bits between the host and memory. Command, address and write data bits transfer occurs on CK rising edge in SDR transactions, or on every CK edge, in DDR transactions.

Note

- All attempts to read the flash memory array during a program or erase (embedded operations) are ignored. The embedded operation will continue to execute without any effect. A very limited set of commands are accepted during an embedded operation. These are discussed in Section 4.12 Suspend and Resume Embedded Operation on page 55.

Protocol Terminology

- The number of DQ signals used during the transaction depends on the current protocol mode or command transferred. The latency cycles do not use the DQ signals for information transfer. The protocol mode options are described by the data rate and the DQ width (number of DQ signals) used during the command, address, and data phases in the following format:

  WR-WR-WR, where:
  - The first WR is the command bit width and rate.
  - The second WR is the address bit width and rate.
  - The third WR is the data bit width and rate.
- The bit width value may be 1, or 8. R has a value of S for SDR or D for DDR. SDR has the same transfer value during the rising and falling edge of a clock cycle. DDR can have different transfer values during the rising and falling edges of each clock.

- Examples:
  - 1S-1S-1S means that the command is 1 bit wide SDR, the address is 1 bit wide SDR, and the data is one bit wide SDR.
  - 8D-8D-8D means that the command, address, and data transfers are always 8 bits wide DDR.

Protocols Definition

- Protocol Modes defined for the Semper Flash Octal Interface:

1.1S-1S-1S: One DQ signal used during command transfer, address transfer, and data transfer. All phases are SDR.

2.8S-8S-8S: Eight DQ signals used during command transfer, address transfer, and data transfer. All phases are SDR.

3.8D-8D-8D: Eight DQ signals used during command transfer, address transfer, and data transfer. All phases are DDR.

1S-1S-1S Protocol

- The 1S-1S-1S mode is the preferred default protocol following Power-On-Reset (POR), but flash devices can be configured to reset into the Octal mode.
- Each transaction begins with an 8-bit (1-byte) command. The command selects the type of information transfer or device operation to be performed.
- This protocol uses SI/DQ[0] to transfer information from host to flash device and SO/DQ[1] to transfer information from flash device to host. On each DQ, information is placed on the DQ line in Most Significant bit (MSb) to Least Significant bit (LSb) order within each byte. Sequential address bytes are transferred in highest order to lowest order sequence. Sequential data bytes are transferred in lowest address to highest address order.
- In 1S-1S-1S, DQ[7:2] are not used for data transfer period. Hence, the DQ[7:2] signals will be high impedance.

8S-8S-8S and 8D-8D-8D Protocols

- Each transaction begins with a 16-bit (two same bytes) command. The command selects the type of information transfer or device operation to be performed.
- Supports 4-byte addressing only.
- This protocol uses DQ[7:0] signals. The LSb of each byte is placed on DQ[0] with each higher order bit on the successively higher numbered DQ signals. Sequential address bytes are transferred in highest order to lowest order sequence. Sequential data bytes in SDR are transferred in lowest address to highest address order. Sequential data bytes in DDR are transferred only in byte pairs (words) where the byte order depends on the order in which the bytes are written or programmed in that protocol mode. Sequential data bytes are transferred in lowest address to highest address order.
- In this protocol, during the period of data transfer in a read transaction, the Data Strobe (DS) signal is driven by the flash device and transitions are synchronized (Edge aligned in DDR and center aligned in SDR protocol) with the DQ signal data transitions. DS is used as an additional output signal with the same timing characteristics as other data outputs but with the guarantee of transitioning with every data bit transferred.

Section 2.3.1 Serial Peripheral Interface (SPI, 1S-1S-1S) on page 10 and Section 2.3.2 Octal Peripheral Interface (Octal, 8S-8S-8S and 8D-8D-8D) on page 12 show all transaction formats by protocol mode.

2.3.1 Serial Peripheral Interface (SPI, 1S-1S-1S)

Figure 6. SPI Transaction with Command Input

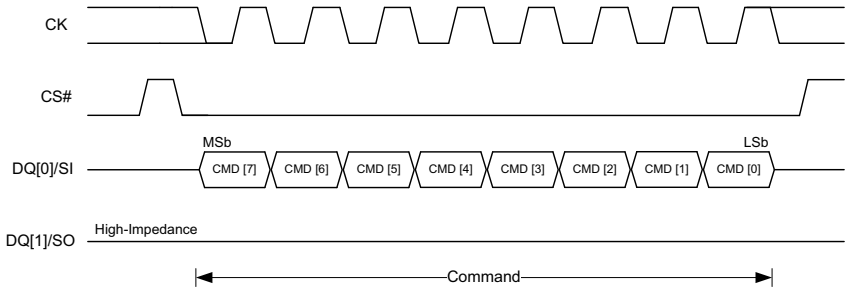

Figure 7. SPI Transaction with Command and Address Input

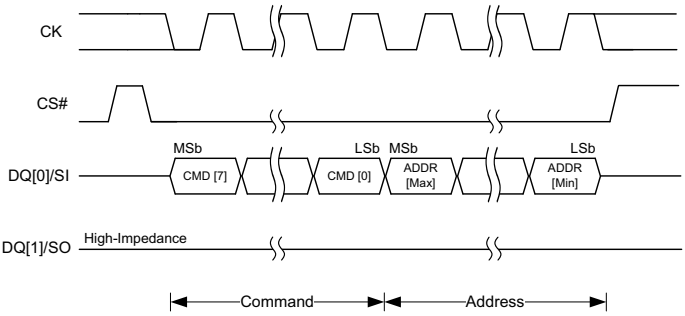

Figure 8. SPI Transaction with Command and Two Input Addresses

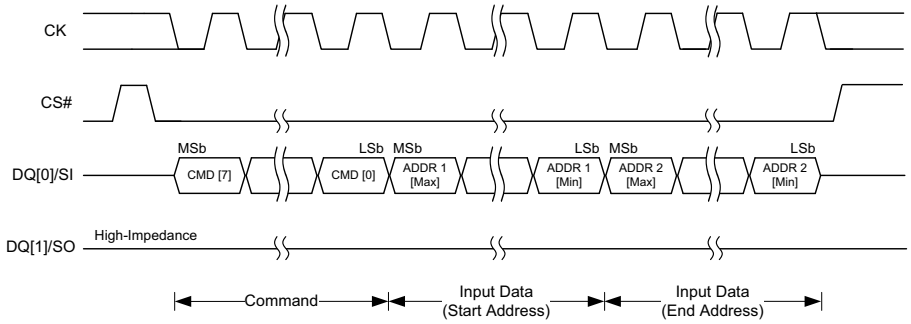

Figure 9. SPI Program Transaction with Command, Address, and Data Input

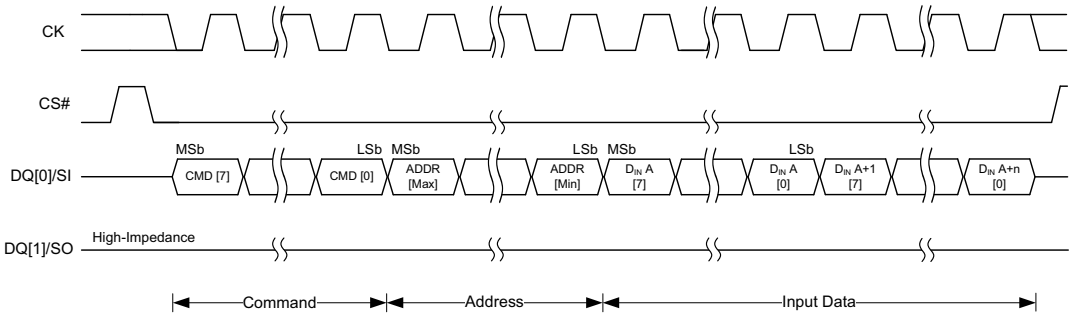

Figure 10. SPI Program Transaction with Command and Data Input

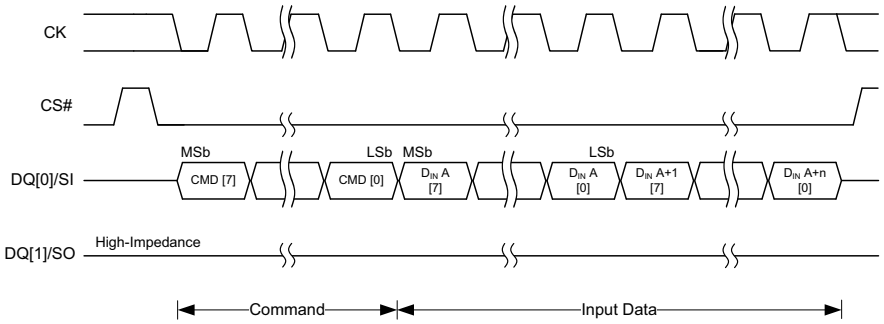

Figure 11. SPI Read Transaction with Command Input (Output Latency)

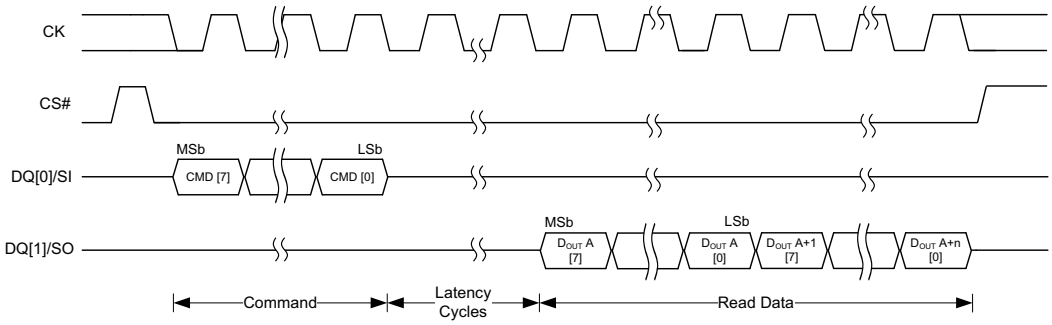

Figure 12. SPI Read Transaction with Command and Address Input (Output Latency)

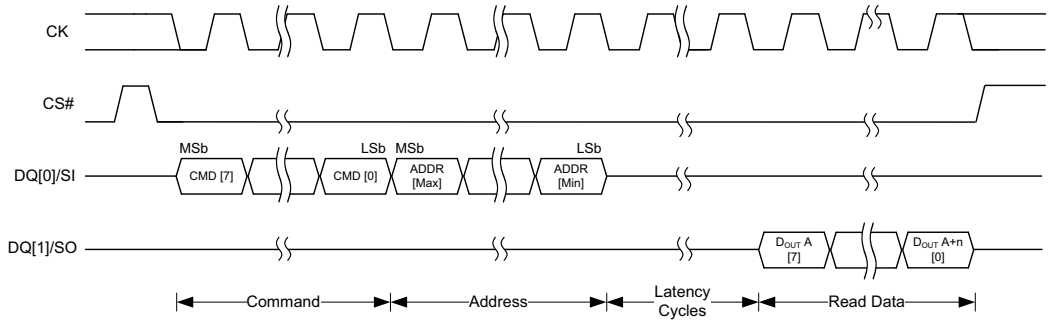

Figure 13. SPI Read Transaction with Command and Address Input (No Output Latency)

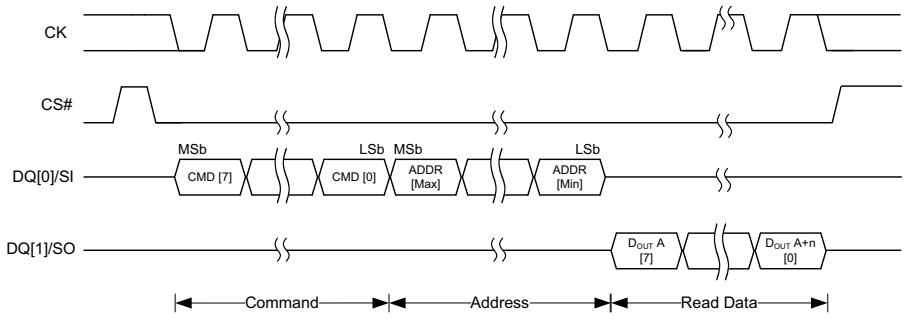

Figure 14. SPI Transaction with Output Data Sequence (AutoBoot)

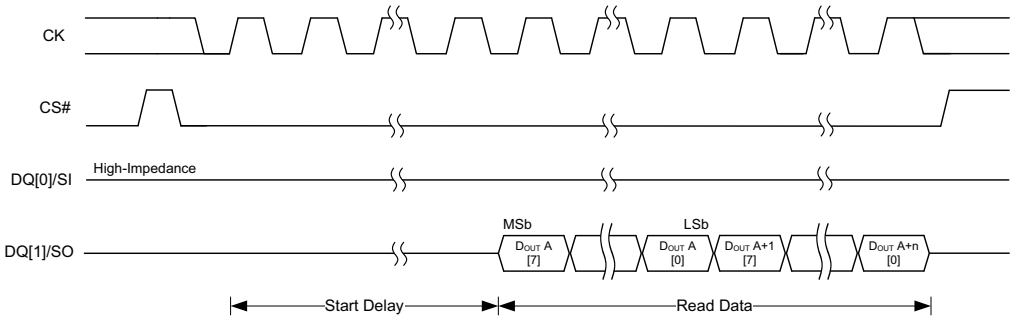

2.3.2 Octal Peripheral Interface (Octal, 8S-8S-8S and 8D-8D-8D)

Figure 15. Octal SDR Transaction with Command Input

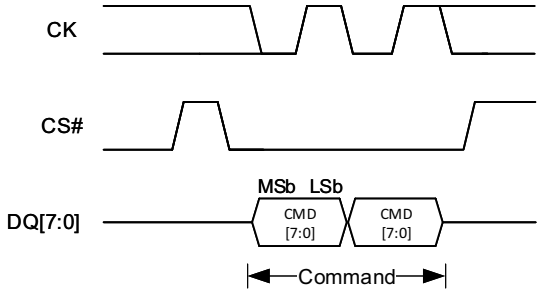

Figure 16. Octal DDR Transaction with Command Input

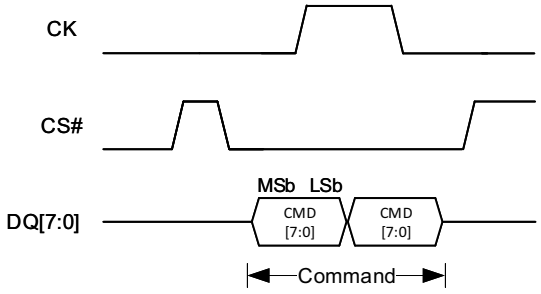

Figure 17. Octal SDR Transaction with Command and Address Input

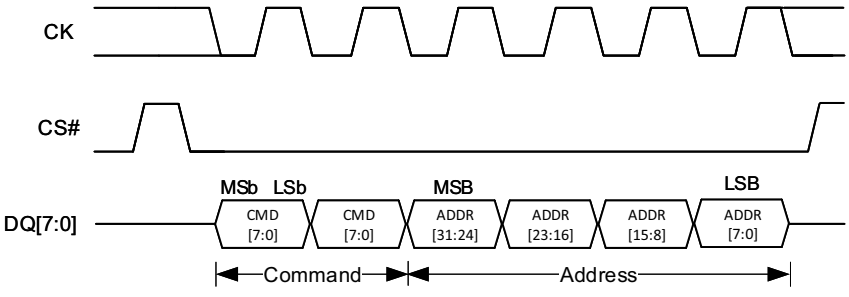

Figure 18. Octal DDR Transaction with Command and Address Input[2]

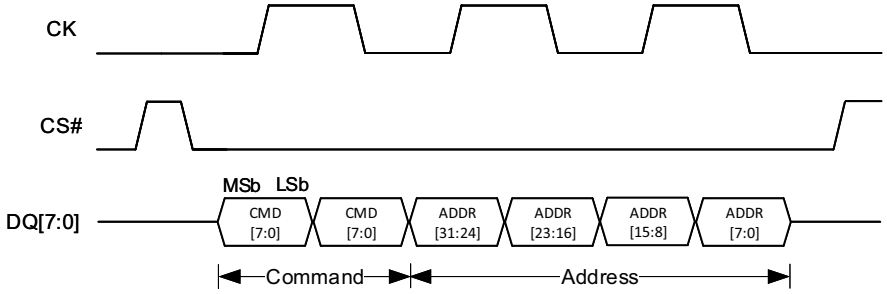

Figure 19. Octal SDR Transaction with Command and Two Input Addresses

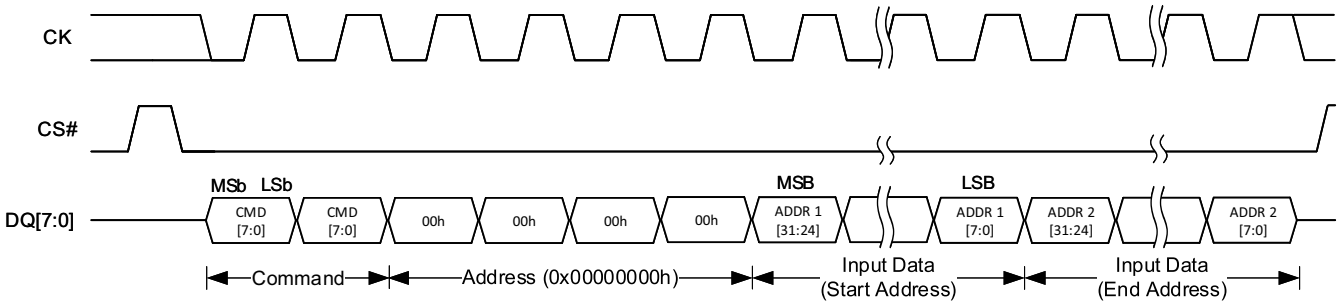

Figure 20. Octal DDR Transaction with Command and Two Input Addresses

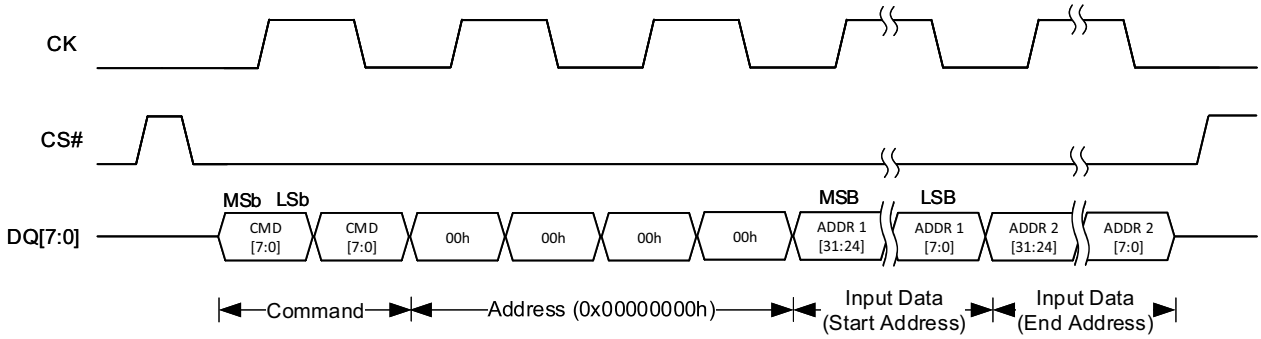

Figure 21. Octal SDR Program Transaction with Command, Address, and Data Input

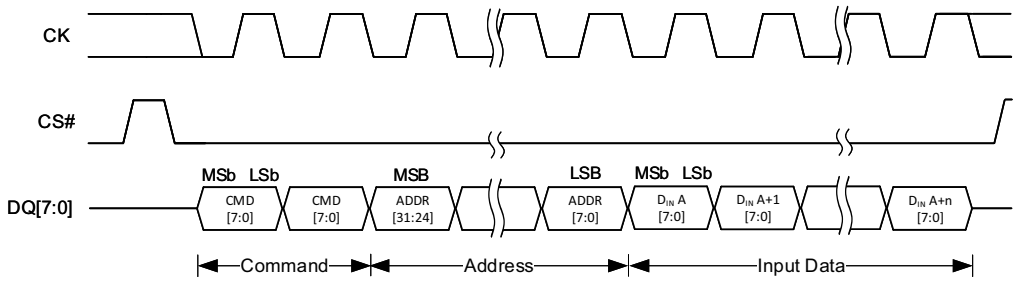

Note
2. The LSb of the address always be zero in any Octal DDR transactions with the address input.

Figure 22. Octal DDR Program Transaction with Command, Address, and Data Input[3]

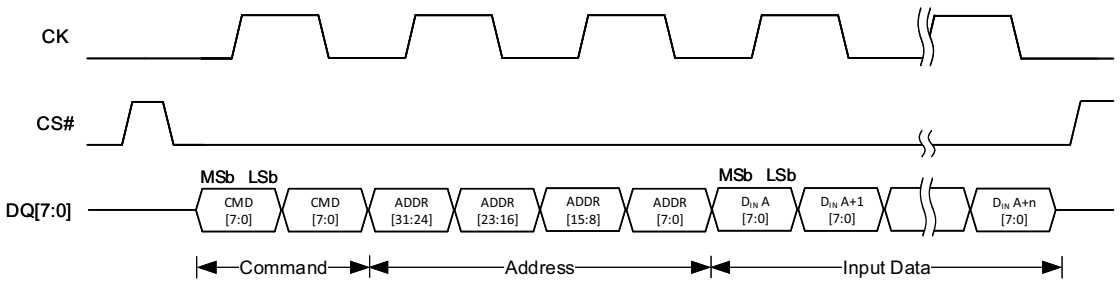

Figure 23. Octal DDR Program Transaction with Command, Address, and Single Byte Data Input[3]

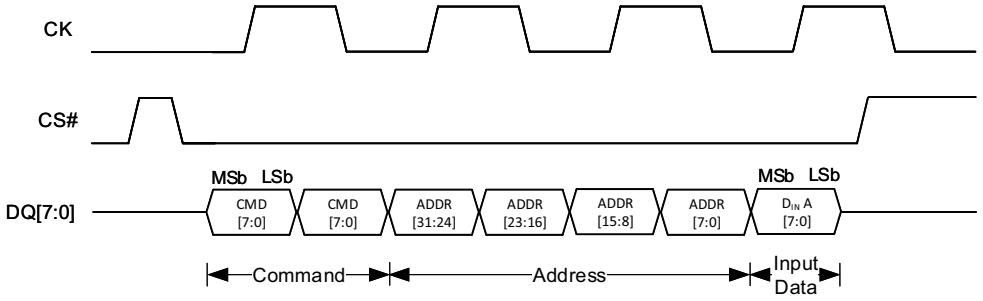

Figure 24. Octal SDR Read Transaction with Command and Address Input (Output Latency)

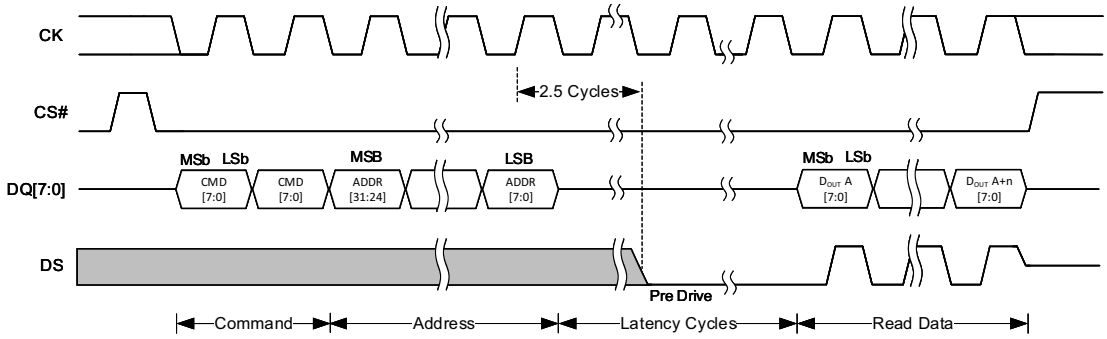

Figure 25. Octal DDR Read Transaction with Command and Address Input (Output Latency)[3, 4]

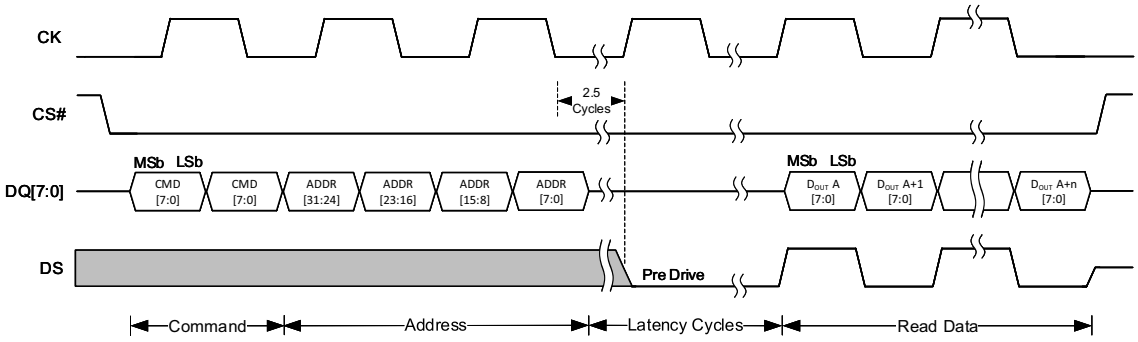

Notes
3. The LSb of the address always be zero in any Octal DDR transactions with the address input.
4. Read Interface CRC Transaction is supported with Octal DDR only.

Figure 26. Octal DDR Single Byte Read Transaction with Command and Address Input (Output Latency)[5]

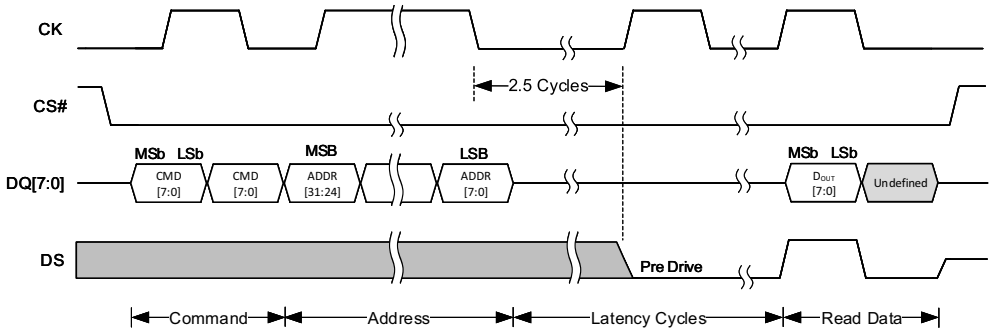

Figure 27. Octal SDR Transaction with Output Data Sequence (AutoBoot)

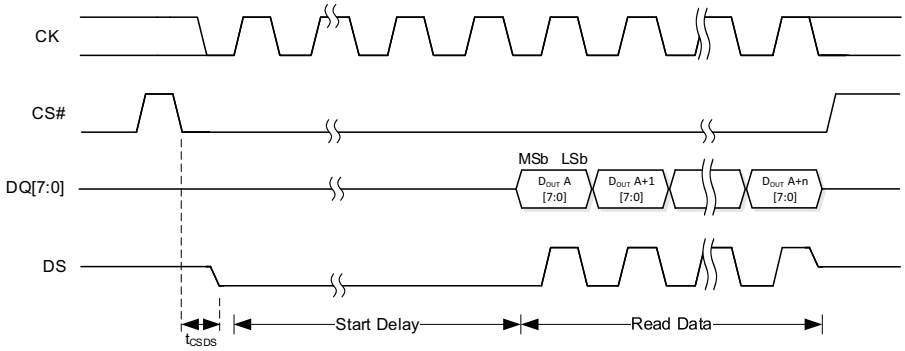

Figure 28. Octal DDR Transaction with Output Data Sequence (AutoBoot)

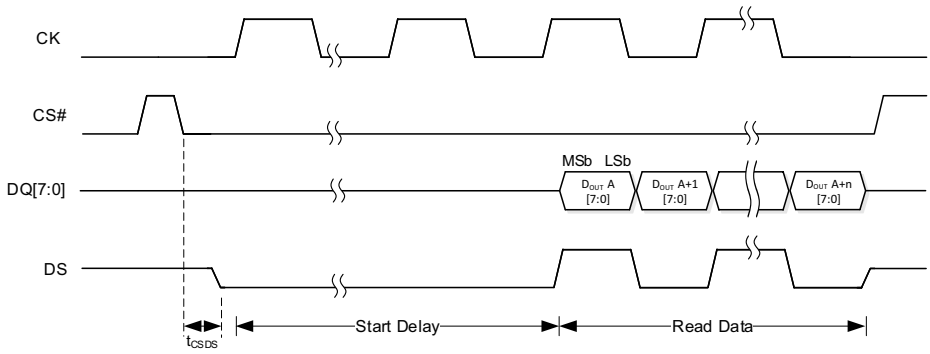

Note
5. The LSb of the address always be zero in any Octal DDR transactions with the address input.

2.4 Register Naming Convention

Figure 29. Register Naming Convention

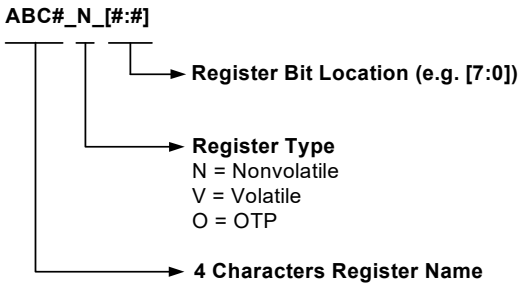

Figure 30. Register Bit Naming Convention

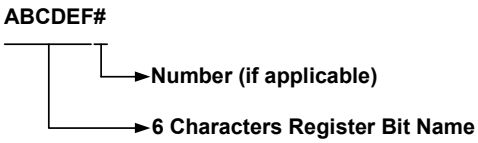

2.5 Transaction Naming Convention

Figure 31. Transaction Naming Convention

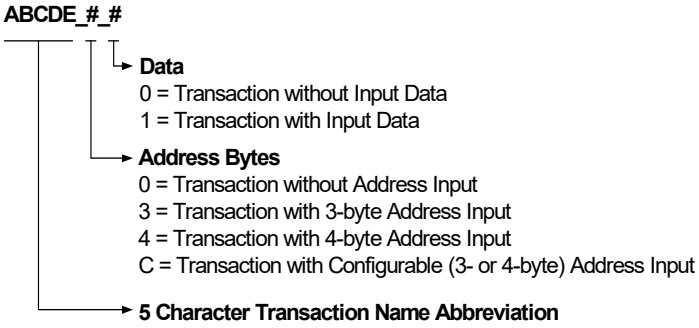

3. Address Space Maps

The HL-T/HS-T family supports 32-bit (4-Byte) addresses only to enable 256 Mb or 512 Mb or 1 Gb density devices. 4-Byte addresses allow direct addressing of up to 4 GB (32 Gb) address space. Besides Flash memory array, HL-T/HS-T family includes separate address spaces for Manufacturer ID, Device ID, Unique ID, Serial Flash Discoverable Parameters (SFDP), Secure Silicon Region (SSR), and Registers.

Figure 32. HL-T/HS-T Address Space Map Overview

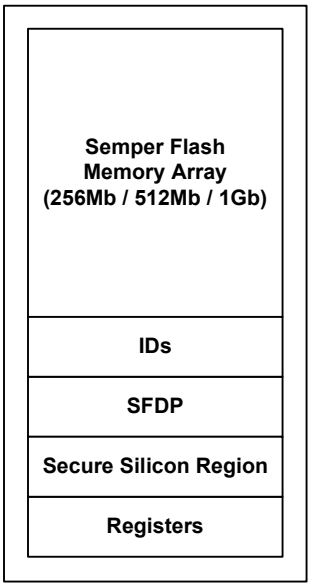

3.1 Semper Flash Memory Array

The main flash array is divided into units called physical sectors.

The HL-T/HS-T family sector architecture supports the following options:

- 256 Mb, 512 Mb, 1 Gb supports 256 KB Uniform sector options
- 256 Mb, 512 Mb, 1 Gb Hybrid sector options
  - Physical set of thirty-two 4 KB sectors and one 128 KB sector at the top or bottom of address space with all remaining sectors of 256 KB
  - Physical set of sixteen 4 KB sectors and one 192 KB sector at both the top and bottom of the address space with all remaining sectors of 256 KB

The combination of the sector architecture selection bits in Configuration Register-1 and Configuration Register-3 support the different sector architecture options of the HL-T/HS-T family. See Section 5. Registers on page 64 for more information.

Table 2. 256 KB Uniform Sector Address Map[6]

Sector Size (KB)	S28HL01GT and S28HS01GT			S28HL512T and S28HS512T			S28HL256T and S28HS256T		
	Sector Count	Sector Range	Byte Address Range (Sector Starting Address - Sector Ending Address)	Sector Count	Sector Range	Byte Address Range (Sector Starting Address - Sector Ending Address)	Sector Count	Sector Range	Byte Address Range (Sector Starting Address - Sector Ending Address)
256	512	SA00	00000000h-0003FFFFh	256	SA00	00000000h-0003FFFFh	128	SA00	00000000h-0003FFFFh
		:	:		:	:		:	:
		SA511	07FC0000h-07FFFFFFh		SA255	03FC0000h-03FFFFFFh		SA127	01FC0000h-01FFFFFFh

Note
6. Configuration: CFR3N[3] = 1.

Table 3. Bottom Hybrid Configuration 1 Thirty-two 4 KB Sectors and 256 KB Uniform Sectors Address Map[7]

Sector Size (KB)	S28HL01GT and S28HS01GT			S28HL512T and S28HS512T			S28HL256T and S28HS256T		
	Sector Count	Sector Range	Byte Address Range (Sector Starting Address - Sector Ending Address)	Sector Count	Sector Range	Byte Address Range (Sector Starting Address - Sector Ending Address)	Sector Count	Sector Range	Byte Address Range (Sector Starting Address - Sector Ending Address)
4	32	SA00	00000000h-00000FFFh	32	SA00	00000000h-00000FFFh	32	SA00	00000000h-00000FFFh
		:	:		:	:		:	:
		SA31	0001F000h-0001FFFFh		SA31	0001F000h-0001FFFFh		SA31	0001F000h-0001FFFFh
128	1	SA32	00020000h-0003FFFFh	1	SA32	00020000h-0003FFFFh	1	SA32	00020000h-0003FFFFh
256	511	SA33	00040000h-0007FFFFh	255	SA33	00040000h-0007FFFFh	127	SA33	00040000h-0007FFFFh
		:	:		:	:		:	:
		SA543	07FC0000h-07FFFFFFh		SA287	03FC0000h-03FFFFFFh		SA159	01FC0000h-01FFFFFFh

Note
7. Configuration: CFR3N[3] = 0, CFR1N[6] = 0, CFR1N[2] = 0.

Table 4. Top Hybrid Configuration 1 Thirty-two 4 KB Sectors and 256 KB Uniform Sectors Address Map[8]

Sector Size (KB)	S28HL01GT and S28HS01GT			S28HL512T and S28HS512T			S28HL256T and S28HS256T		
	Sector Count	Sector Range	Byte Address Range (Sector Starting Address - Sector Ending Address)	Sector Count	Sector Range	Byte Address Range (Sector Starting Address - Sector Ending Address)	Sector Count	Sector Range	Byte Address Range (Sector Starting Address - Sector Ending Address)
256	511	SA00	00000000h-0003FFFFh	255	SA00	00000000h-0003FFFFh	127	SA00	00000000h-0003FFFFh
		:	:		:	:		:	:
		SA510	07F80000h-07FBFFFFh		SA254	03F80000h-03FBFFFFh		SA126	01F80000h-01FBFFFFh
128	1	SA511	07FC0000h-07FDFFFFh	1	SA255	03FC0000h-03FDFFFFh	1	SA127	01FC0000h-01FDFFFFh
4	32	SA512	07FE0000h-07FE0FFFh	32	SA256	03FE0000h-03FE0FFFh	32	SA128	01FE0000h-01FE0FFFh
		:	:		:	:		:	:
		SA543	07FFF000h-07FFFFFFh		SA287	03FFF000h-03FFFFFFh		SA159	01FFF000h-01FFFFFFh

Note
8. Configuration: CFR3N[3] = 0, CFR1N[6] = 0, CFR1N[2] = 1.

Table 5. Hybrid Configuration 2 Bottom Sixteen and Top Sixteen 4 KB Sectors Address Map[9]

Sector Size (KB)	S28HL01GT and S28HS01GT			S28HL512T and S28HS512T			S28HL256T and S28HS256T		
	Sector Count	Sector Range	Byte Address Range (Sector Starting Address - Sector Ending Address)	Sector Count	Sector Range	Byte Address Range (Sector Starting Address - Sector Ending Address)	Sector Count	Sector Range	
4	16	SA00	00000000h-00000FFFh	16	SA00	00000000h-00000FFFh	16	SA00	00000000h-00000FFFh
		:	:		:	:		:	:
		SA15	0000F000h-0000FFFFh		SA15	0000F000h-0000FFFFh		SA15	0000F000h-0000FFFFh
192	1	SA16	00010000h-0003FFFFh	1	SA16	00010000h-0003FFFFh	1	SA16	00010000h-0003FFFFh
256	510	SA17	00040000h-0007FFFFh	254	SA17	00040000h-0007FFFFh	126	SA17	00040000h-0007FFFFh
		:	:		:	:		:	:
		SA526	07F80000h-07FBFFFFh		SA270	03F80000h-03FBFFFFh		SA142	01F80000h-01FBFFFFh
192	1	SA527	07FC0000h-07FEFFFFh	1	SA271	03FC0000h-03FEFFFFh	1	SA143	01FC0000h-01FEFFFFh
4	16	SA528	07FF0000h-07FF0FFFh	16	SA272	03FF0000h-03FF0FFFh	16	SA144	01FF0000h-01FF0FFFh
		:	:		:	:		:	:
		SA543	07FFF000h-07FFFFFFh		SA287	03FFF000h-03FFFFFFh		SA159	01FFF000h-01FFFFFFh

Note
9. Configuration: CFR3N[3] = 0, CFR1N[6] = 1.

These are condensed tables that use a couple of sectors as references. There are address ranges that are not explicitly listed. All 4 KB sectors have the pattern xxxxx000h-xxxxxFFFh. All 256 KB sectors have the pattern xxx00000h-xxx3FFFFh, xxx40000h-xxx7FFFFh, xx80000h-xxxCFFFFh, or xxD0000h-xxxFFFFFh.

3.2 ID Address Space

This particular region of the memory is assigned to manufacturer, device, and unique identification:

- The manufacturer identification is assigned by JEDEC.
- The device identification is assigned by Cypress.
- A 64-bit unique number is located in 8 bytes of the Unique Device ID address space. This Unique ID can be used as a software readable serial number that is unique for each device.

There is no address space defined for these IDs as they can be read by providing the respective transactions only. The transactions do not need the address to read these IDs. The data in this address space is read-only data.

3.3 JEDEC JESD216 Serial Flash Discoverable Parameters (SFDP) Space

The Serial Flash Discoverable Parameter (SFDP) standard provides a consistent method of describing the functional and feature capabilities of this serial flash device in a standard set of internal parameter tables. These parameter tables can be interrogated by host system software to enable adjustments needed to accommodate divergent features. The SFDP address space has a header starting at address zero that identifies the SFDP data structure and provides a pointer to each parameter. The SFDP address space is programmed by Cypress and read-only for the host system.

Table 6. SFDP Overview Address Map

Byte Address	Description
0000h	Location zero within JEDEC JESD216C SFDP space - start of SFDP header
,,,	Remainder of SFDP header followed by undefined space
0100h	Start of SFDP parameter tables The SFDP parameter table data starting at 0100h
...	Remainder of SFDP parameter tables followed by either more parameters or undefined space

3.4 Secure Silicon Region (SSR) Address Space

Each HL-T/HS-T family memory device has a 1024-byte Secure Silicon Region which is OTP address space. This address space is separate from the main flash array. The SSR area is divided into 32 individually lockable, 32-byte aligned and length regions.

In the 32-byte region starting at address zero:

- The sixteen lowest bytes contain a 128-bit random number. The random number cannot be written to, erased or programmed and any attempts will return an PRGERR flag.
- The next four bytes are used to provide one bit per secure region (32 bits in total) to permanently protect once set to “0” from writing, erasing or programming.
- All other bytes are reserved.

The remaining regions are erased when shipped from Cypress, and are available for programming of additional permanent data.

Table 7. SSR Address Map

Region	Byte Address Range	Contents	Initial Delivery State
Region 0	000h	LSB of Cypress Programmed Random Number	Cypress Programmed Random Number
	...	...	
	00Fh	MSB of Cypress Programmed Random Number	
	010h to 013h	Region Locking Bits Byte 10h [bit 0] locks region 0 from programming when = 0 ... Byte 13h [bit 7] locks region 31 from programming when = 0	All Bytes = FFh
	014h to 01Fh	Reserved for Future Use (RFU)	
Region 1	020h to 03Fh	Available for User Programming	
Region 2	040h to 05Fh		
...	...		
Region 31	3E0h to 3FFh		

3.5 Registers

Registers are small groups of memory cells used to configure how the HL-T/HS-T family memory device operates, or to report the status of device operations. The registers are accessed by specific commands and addresses. Table 8 shows the address map for every available register in this flash memory device.

Table 8. Register Address Map

Function	Register Type	Register Name	Volatile Component Address (hex)	Nonvolatile Component Address (hex)
Device Status	Status Register 1	STR1N[7:0], STR1V[7:0]	0x00800000	0x00000000
	Status Register 2	STR2V[7:0]	0x00800001	N/A
Device Configuration	Configuration Register 1	CFR1N[7:0], CFR1V[7:0]	0x00800002	0x00000002
	Configuration Register 2	CFR2N[7:0], CFR2V[7:0]	0x00800003	0x00000003
	Configuration Register 3	CFR3N[7:0], CFR3V[7:0]	0x00800004	0x00000004
	Configuration Register 4	CFR4N[7:0], CFR4V[7:0]	0x00800005	0x00000005
	Configuration Register 5	CFR5N[7:0], CFR5V[7:0]	0x00800006	0x00000006
Interface CRC	Interface CRC Enable Register	ICEV[7:0]	0x00800008	N/A
EnduraFlex Architecture	EnduraFlex Architecture Selection Register 0 [1:0]	EFX0O[7:0]	N/A	0x00000050
	EnduraFlex Architecture Selection Register 1 [7:0]	EFX1O[7:0]		0x00000052
	EnduraFlex Architecture Selection Register 1 [10:8]	EFX1O[10:8]		0x00000053
	EnduraFlex Architecture Selection Register 2 [7:0]	EFX2O[7:0]		0x00000054
	EnduraFlex Architecture Selection Register 2 [10:8]	EFX2O[10:8]		0x00000055
	EnduraFlex Architecture Selection Register 3 [7:0]	EFX3O[7:0]		0x00000056
	EnduraFlex Architecture Selection Register 3 [10:8]	EFX3O[10:8]		0x00000057
	EnduraFlex Architecture Selection Register 4 [7:0]	EFX4O[7:0]		0x00000058
	EnduraFlex Architecture Selection Register 4 [10:8]	EFX4O[10:8]		0x00000059
Interrupt Pin	Interrupt Configuration Register	INCV[7:0]	0x00800068	N/A
	Interrupt Status Register	INSV[7:0]	0x00800067	
Error Correction	ECC Status Register	ESCV[7:0]	0x00800089	
	ECC Error Detection Count Register [7:0]	ECTV[7:0]	0x0080008A	
	ECC Error Detection Count Register [15:8]	ECTV[15:8]	0x0080008B	
	ECC Address Trap Register [7:0]	EATV[7:0]	0x0080008E	
	ECC Address Trap Register [15:8]	EATV[15:8]	0x0080008F	
	ECC Address Trap Register [23:16]	EATV[23:16]	0x00800040	
	ECC Address Trap Register [31:24]	EATV[31:24]	0x00800041	
AutoBoot	AutoBoot Register [7:0]	ATBN[7:0]	N/A	0x00000042
	AutoBoot Register [15:8]	ATBN[15:8]		0x00000043
	AutoBoot Register [23:16]	ATBN[23:16]		0x00000044
	AutoBoot Register [31:24]	ATBN[31:24]		0x00000045
Erase Count	Sector Erase Count Register [7:0]	SECV[7:0]	0x00800091	N/A
	Sector Erase Count Register [15:8]	SECV[15:8]	0x00800092	
	Sector Erase Count Register [23:16]	SECV[23:16]	0x00800093	
Data Integrity Check	Data Integrity Check CRC Register [7:0]	DCRV[7:0]	0x00800095	
	Data Integrity Check CRC Register [15:8]	DCRV[15:8]	0x00800096	
	Data Integrity Check CRC Register [23:16]	DCRV[23:16]	0x00800097	
	Data Integrity Check CRC Register [31:24]	DCRV[31:24]	0x00800098	

Table 8. Register Address Map (Continued)

Function	Register Type	Register Name	Volatile Component Address (hex)	Nonvolatile Component Address (hex)
Protection and Security	Advanced Sector Protection Register [7:0]	ASPO[7:0]	N/A	0x00000030
	Advanced Sector Protection Register [15:8]	ASPO[15:8]		0x00000031
	ASP PPB Lock Register (Persistent Protection Block)	PPLV[7:0]	0x0080009B	N/A
	ASP Password Register [7:0]	PWDO[7:0]	N/A	0x00000020
	ASP Password Register [15:8]	PWDO[15:8]		0x00000021
	ASP Password Register [23:16]	PWDO[23:16]		0x00000022
	ASP Password Register [31:24]	PWDO[31:24]		0x00000023
	ASP Password Register [39:32]	PWDO[39:32]		0x00000024
	ASP Password Register [47:40]	PWDO[47:40]		0x00000025
	ASP Password Register [55:48]	PWDO[55:48]		0x00000026
	ASP Password Register [63:56]	PWDO[63:56]		0x00000027

4. Features

4.1 Error Detection and Correction

HL-T/HS-T family devices support error detection and correction by generating an embedded Hamming error correction code during memory array programming. This ECC code is then used for error detection and correction during read operations. The ECC is based on a 16-byte data unit. When the 16-byte data unit is loaded into the Program Buffer and is transferred to the 128-bits flash memory array Line for programming (after an erase), an 8-bit Error Correction Code (ECC) for each data unit is also programmed into a portion of the memory array that is not visible to the host system software. This ECC information is then checked during each Flash array read operation. Any 1-bit error within the data unit will be corrected by the ECC logic. The 16-byte data unit is the smallest program granularity on which ECC is enabled.

When any amount of data is first programmed within a 16-byte data unit, the ECC value is set for the entire data unit. If additional data is subsequently programmed into the same data unit, without an erase, then the ECC for that data unit is disabled and the 1-bit ECC disable bit is set. A sector erase is needed to again enable ECC on that data unit.

These are automatic operations transparent to the user. The transparency of the ECC feature enhances data reliability for typical programming operations which write data once to each data unit while also facilitating software compatibility with previous generations of products by still allowing for single-byte programming and bit-walking (in this case, ECC will be disabled) in which the same data unit is programmed more than once.

Figure 33. 16-Byte ECC Data Unit Example

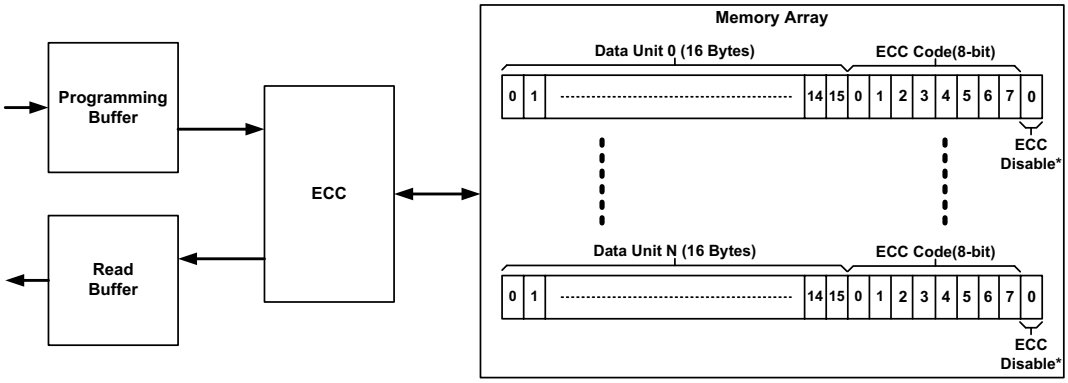

* 9th ECC Code bit in case of 2-bit Error Detection Enabled

Semper NOR Flash supports 2-bit error detection as the default ECC configuration. In this configuration, any 1-bit error in a data unit is corrected and any 2-bit error is detected and reported. The 16-byte unit data requires a 9-bit Error Correction Code for 2-bit error detection. When 2-bit error detection is enabled, byte-programming, bit-walking, or multiple program operations to the same data unit (without an erase) are not allowed and will result in a Program Error. Changing the ECC mode from 1-bit error detection to 2-bit error detection, or from 2-bit error detection to 1-bit error detection will invalidate all data in the memory array. When changing the ECC mode, the host must first erase all sectors in the device. If the ECC mode is changed without erasing programmed data, subsequent read operations will result in undefined behavior.

4.1.1 ECC Error Reporting

There are five methods for reporting to the host system when ECC errors are detected.

- ECC Data Unit Status provides the status of 1-bit or 2-bit errors in data units.
- ECC Status Register provides the status of 1-bit or 2-bit errors since the last ECC clear or reset.
- The Address Trap Register captures the address location of the first ECC error encountered after POR or reset during memory array read.
- An ECC Error Detection counter keeps a tally of the number of 1-bit or 2-bit errors that have occurred in data units during reads.
- The Interrupt (INT#) output can be enabled to indicate when either a 1-bit or 2-bit error is detected as data is read.

4.1.1.1 ECC Data Unit Status (EDUS)

- The status of ECC in each data unit is provided by the 8-bit ECC Data Unit Status.
- The ECC status transaction outputs the ECC status of the addressed data unit. The contents of the ECC Data Unit status then indicate, for the selected data unit, whether there is a 1-bit error corrected, 2-bit error detected, or the ECC is disabled for that data unit.

Table 9. ECC Data Unit Status

Bits	Field Name	Function	Read/Write N = Nonvolatile V = Volatile	Factory Default (binary)	Description
EDUS[7:4]	RESRVD	Reserved For Future Use	V => R	0000	These bits are Reserved for future use.
EDUS[3]	ECC2BD	ECC Error 2-bit Error Detection Flag	V => R	0	This bit indicates whether a two bit error is detected in the data unit, if two bit ECC error detection is enabled CFR4V[3] = 1. Single byte programming and bit walking in which the same data unit is programmed more than once is not allowed within the same data unit, because ECC cannot be turned off and ECCOFF bit will always be “0” and will result in a Program Error. When CFR4V[3] = 0 and 2-bit error detection is disabled, ECC2BD bit will alway be “0”. Selection Options: 1 = Two Bit Error detected 0 = No error
EDUS[2]	RESRVD	Reserved For Future Use	V => R	0	This bit is Reserved for future use.
EDUS[1]	ECC1BC	ECC Error 1-bit Error Detection and Correction Flag	V => R	0	This bit indicates whether an error was corrected in the data unit. Selection Options: 1 = Single Bit Error corrected in the addressed data unit 0 = No single bit error was corrected in the addressed data unit
EDUS[0]	ECCOFF	Data Unit ECC Off/On Flag	V => R	0	This bit indicates whether the ECC syndrome is off in the data unit. Selection Options: 1 = ECC is OFFin the selected data unit 0 = ECC is ON in the selected data unit

4.1.1.2 ECC Status Register (ECSV)

- An 8-bit ECC Status Register provides the status of 1-bit or 2-bit errors during normal reads since last ECC clear or reset. ECC Status Register does not have user programmable nonvolatile bits, all defined bits are volatile read only bits. The default state of these bits are set by hardware.
- ECC Status Register can be accessed through the Read Any Register transaction. The correct sequence for Read Any Register based ECSV is read as follows:
  - Read data from memory array using any of the Read transaction
  - ECSV is updated by the device
  - Read Any Register of ECSV provides the status of any ECC event since the last clear or reset.
- ECSV is cleared by POR, CS# Signaling Reset, Hardware/Software reset, or a Clear ECC Status Register transaction.

4.1.1.3 ECC Error Address Trap (EATV)

- A 32-bit register is provided to capture the ECC data unit address where an ECC error is first encountered during a read of the flash array. Only the address of the first enabled error type (“2-bit only” or “1-bit or 2-bit” as selected in CFR4N[3]) encountered after POR, hardware reset, or the ECC Clear transaction is captured. The EATV Register is only updated during Read transactions.

  The EATV Register contains the address that was accessed when the error was detected. The failing bits may not be located at the exact address indicated in the register, but will be located within the aligned 16-byte ECC data unit where the error was detected. If errors are found in multiple ECC data units during a single read operation, only the address of the first failing ECC unit address is captured in the EATV Register.

  When 2-bit error detection is not enabled and the same ECC unit is programmed more than once, ECC error detection for that ECC unit is disabled, therefore no error can be recognized to trap the address.

  The Address Trap Register has a valid address when the ECC Status Register (ECSV) bit 3 or 4 = 1.

- The Address Trap Register can be read using the Read Any Register transaction.
- Clear ECC Status Register transaction, POR, or CS# Signaling/Hardware/Software reset clears the Address Trap Register.

4.1.1.4 ECC Error Detection Counter (ECTV)

- A 16-bit register is provided to count the number of 1-bit or 2-bit errors that occur as data is read from the flash memory array. Only errors recognized in the main array will cause the Error Detection Counter to increment. ECTV Register is only updated during Read transaction. Read ECC Status transaction does not affect the ECTV Register.

  The 16-bit Error Detection Counter will not increment beyond FFFFh. However, the ECC continues to work.

  Note that during continuous read operations, when a 1-bit or a 2-bit error is detected, the clock may continue toggling and the memory device will continue incrementing the data address and placing new data on the DQ signals; any additional data units with errors that are encountered will be counted until CS# is brought back HIGH.

  During a read transaction only one error is counted for each data unit found with an error. Each read transaction will cause a new read of the target data unit. If multiple read transactions access the same data unit containing an error, the error counter will increment each time that data unit is read.

  When 2-bit error detection is not enabled and the same data unit is programmed more than once, ECC error detection for that data unit is disabled so, no error can be recognized or counted.

- The ECC Error Detection Counter Register can be read using the Read Any Register transaction.
- ECTV Register is set to 0 on POR, CS# Signaling/Hardware/Software Reset or with Clear ECC Status Register transaction.

4.1.1.5 INT# Output

- HL-T/HS-T supports INT# output pin to indicate to the host system that an event has occurred within the flash device. The user can configure the INT# output pin to transition to the active (LOW) state when:
  - 2-bit ECC error is detected
  - 1-bit ECC error is detected
  - Transitioning from the Busy to the Ready state

  The INT# pin is only available in BGA package. Operation is controlled with the Interrupt Configuration Register (INCV) where the INT# output (normally HIGH) is enabled. The Interrupt Configuration Register determines when an internal event is enabled to trigger a HIGH to LOW transition on the INT# output pin.

  The Interrupt Status Register (INSV) indicates the enabled internal event(s) that have occurred since the last time the INSV was cleared.

  If enabled, the INT# output pin will then transition from HIGH to LOW upon the occurrence of an enabled event. Once the host recognizes that INT# has transitioned to the LOW state the INSV Register can be read to determine which internal event was responsible. INT# output status during POR, Hardware Reset, Software Reset, DPD Exit, or CS# Signaling Reset is not valid.

- The INCV and INSV can be accessed through Read Any Register transaction from the SPI and Octal interfaces. Write Any Register transaction to INCV is only supported in the Octal interface.

- The INT# output can be forced to transition back to the HIGH state (returned HIGH by an external pull-up resistance) using the following methods:
  - Disable the INT# output by loading a 1 into bit 7 of the Interrupt Configuration Register.
  - Reset the appropriate bit (by writing a 1) in the INSV bit that indicates which internal event occurred to cause the output to go LOW. All INSV bits that are LOW and are also enabled in the INSV must be reset before the INT# output will return HIGH.
  - The INT# output will also be returned to the default (disabled, High-Z) state with CS# Signaling Reset, Hardware Reset (RESET# = LOW) or a POR. Hardware Reset and POR disable all interrupts by setting the Interrupt Configuration Register back to the default (all interrupts disabled) state.
  - Clearing ECC Status Register after the ECC event forces the INT# output to HIGH state.

4.1.2 ECC Related Registers and Transactions

Table 10. ECC Related Registers and Transactions

Related Registers	Related SPI Transactions (see Table 75 on page 85)	Related Octal Transactions (see Table 76 on page 88)
Configuration Register - 4 (CFR4N, CFR4V) (see Table 52 on page 72)	Read Any Register (RDARG_C_0)	Read Any Register (RDARG_4_0)
ECC Status Register (ECSV) (see Table 58 on page 75)	Write Enable (WRENB_0_0)	Write Enable (WRENB_0_0)
ECC Address Trap Register (EATV) (see Table 59 on page 76)	Write Any Register (WRARG_C_1)	Write Any Register (WRARG_4_1)
ECC Error Detection Counter Register (ECTV) (see Table 60 on page 76)	Read ECC Status (RDECC_4_0)	Read ECC Status (RDECC_4_0)
Interrupt Configuration Register (INCV) (see Table 68 on page 80)	Clear ECC Status Register (CLECC_0_0)	Clear ECC Status Register (CLECC_0_0)
Interrupt Status Register (INSV) (see Table 69 on page 81)	–	–

4.2 EnduraFlex Architecture (Wear Leveling)

EnduraFlex Architecture allows partitioning of the main memory array into regions which can be configured as either high endurance or long retention. EnduraFlex implements wear leveling in high endurance regions where program/erase cycles are spread evenly across all the sectors which are part of the wear leveling pool. This greatly improves the reliability of the device by avoiding premature wear-out of an individual sector.

Architecturally, EnduraFlex's wear leveling algorithm is based on a mapping of logical sectors to physical sectors. During the lifetime of the part, this mapping is changed to maintain a uniform distribution of program/erase cycles over all physical sectors. The logical to physical mapping information is stored in a dedicated flash array which is updated when sectors are swapped. Sector swaps occur when an erase transaction is given.

EnduraFlex’s high endurance region requires a minimum set of 20 sectors. To provide flexibility between configuring long retention, high endurance, or both regions, a four pointer architecture is provided. The factory default setting designates all sectors as high endurance as part of the wear leveling pool with all pointers disabled. The four pointers can be used to form a maximum of five regions which can each be configured as long retention or high endurance.

Figure 34 provides an overview of the EnduraFlex Architecture. It shows the five possible regions based on different sector architecture.

Note 4 KB sectors are not part of the EnduraFlex Architecture.

Figure 34. EnduraFlex™ Architecture Overview

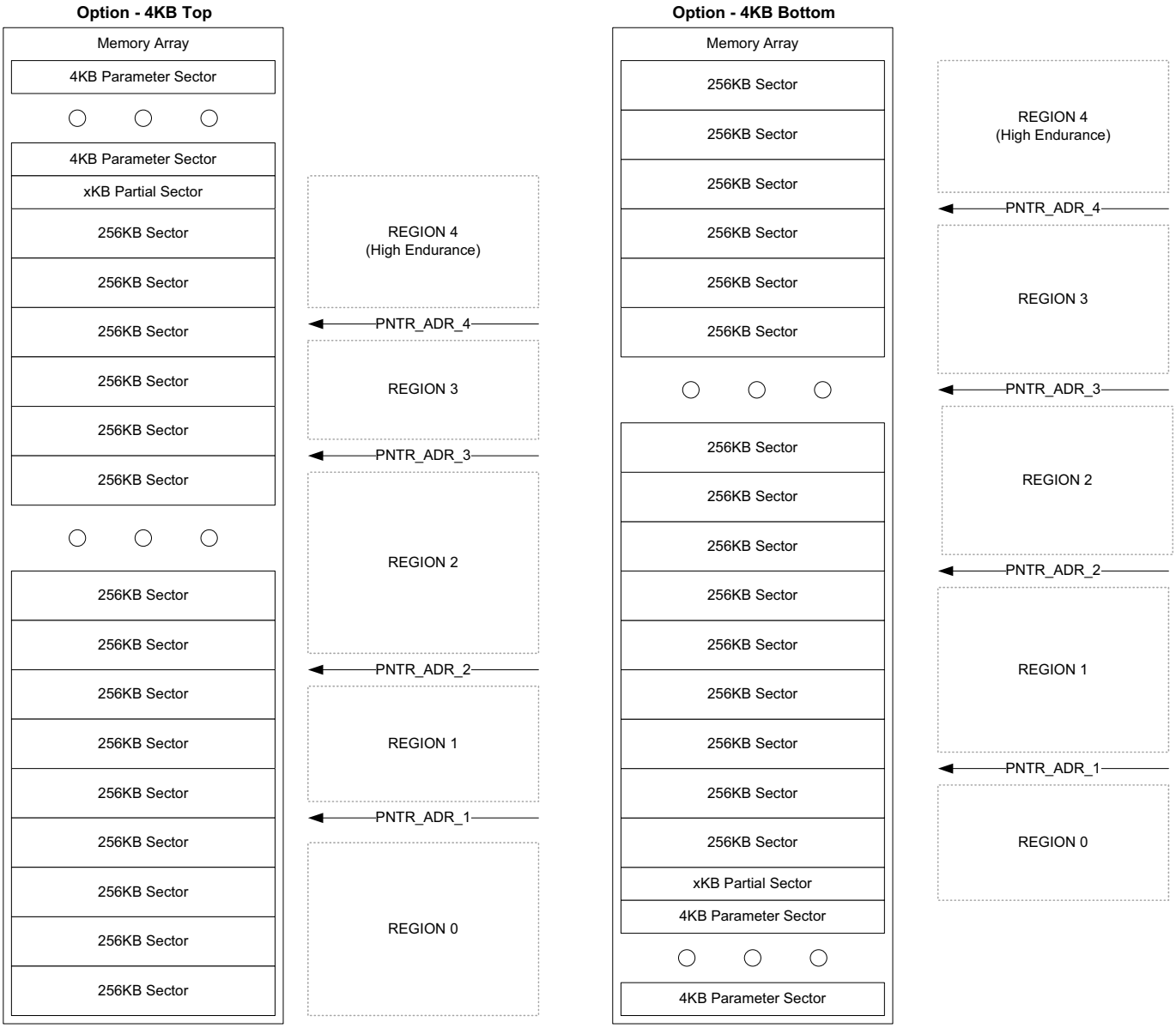

Figure 34. EnduraFlex™ Architecture Overview (Continued)

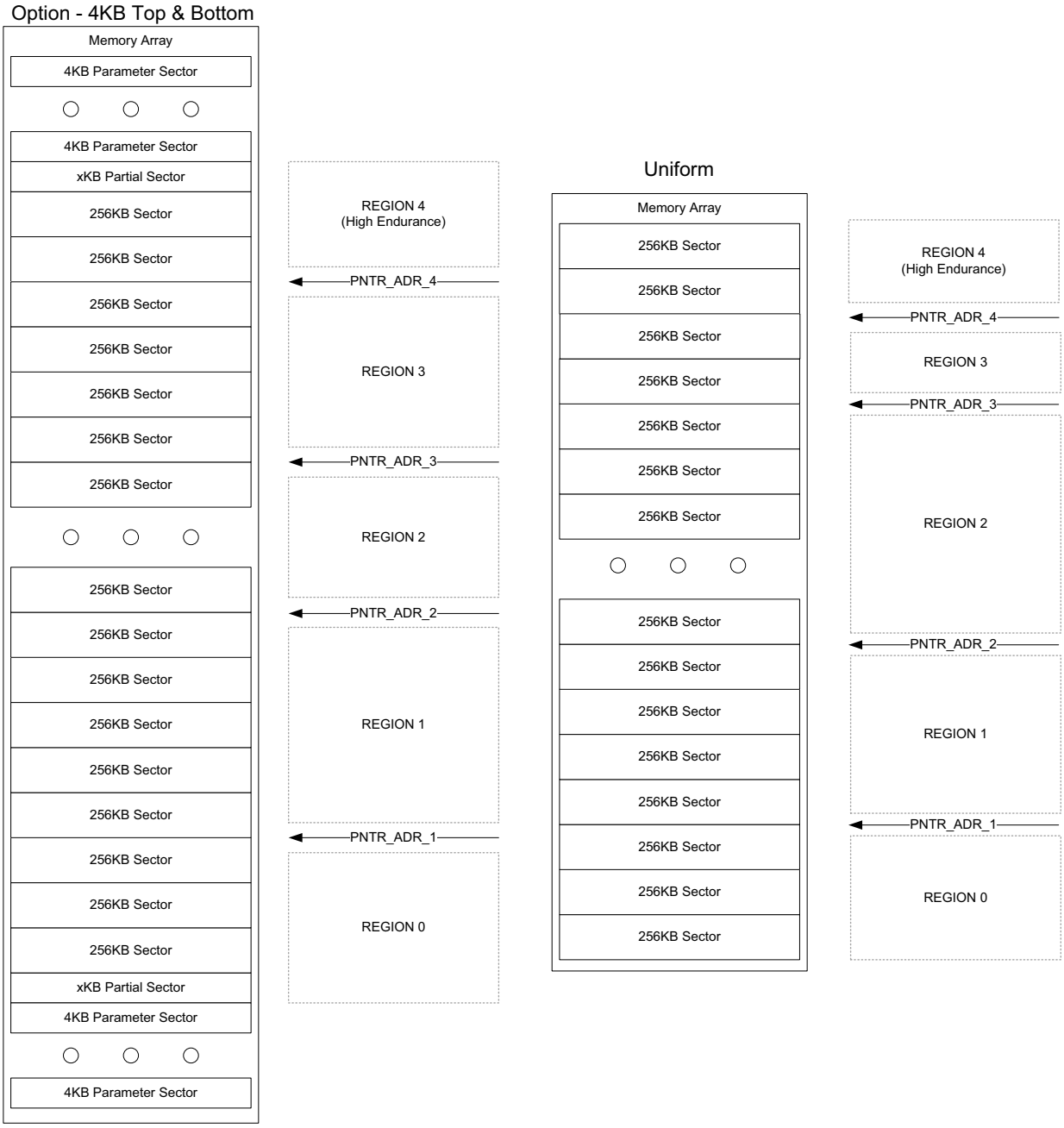

Table 11. Region Definitions[10, 11, 12, 13]

Region	Lower Limit	Upper Limit
0	Sector 0	Address Pointer 1
1	Address Pointer 1	Address Pointer 2
2	Address Pointer 2	Address Pointer 3
3	Address Pointer 3	Address Pointer 4
4	Address Pointer 4	Highest Sector

Notes
10. The pointer addresses must obey the following rules:
    Pointer#4 address > Pointer#3 address
    Pointer#3 address > Pointer#2 address
    Pointer#2 address > Pointer#1 address
11. 4 KB sectors are excluded.
12. It is required that the high data endurance and long data retention regions are configured at the time the device is first powered-up by the customer. Once configured, they can never be changed again.
13. The minimum size of any high endurance region is 20 sectors.

4.2.1 Configuration 1: Maximum Endurance - Single High Endurance Region

Maximum endurance is achieved when all 256 KB sectors are designated as high endurance. All sectors must be designated as high endurance using the EnduraFlex pointer architecture. Maximum endurance pointer configuration is shown in Table 12.

Table 12. EnduraFlex Pointer Values for Maximum Endurance Configuration[14]

Pointer #	Pointer Address EPTADn[8:0]	Region Type ERGNTn	Pointer Enable# EPTEBn	Global Region Selection GBLSEL	Wear Leveling Enable WRLVEN
0	N/A	N/A	N/A	1'b1	1'b1
1	9'b111111111	1'b1	1'b1	N/A	N/A
2	9'b111111111				
3	9'b111111111				
4	9'b111111111				

Note
14. This is also the default configuration of the device.

4.2.2 Configuration 2: Two Region Selection - One Long Retention Region and One High Endurance Region

Sectors for long retention or high endurance must be delineated using the EnduraFlex pointer architecture. Region 0 is defined as long retention and consists of 16 sectors. Region 1 is defined as high endurance and has 240 sectors. The pointer setup for two region configuration is shown in Table 13.

Table 13. EnduraFlex Pointer Values for Two Region Configuration

Pointer #	Pointer Address EPTADn[8:0]	Region Type ERGNTn	Pointer Enable# EPTEBn	Global Region Selection GBLSEL	Wear Leveling Enable WRLVEN
0	N/A	N/A	N/A	1'b1	1'b1
1	9'b000000111	1'b1	1'b0	N/A	N/A
2	9'b001111111	1'b0	1'b1		
3					
4					

4.2.3 EnduraFlex Related Registers and Transaction

Table 14. EnduraFlex Related Registers and Transactions

Related Registers	Related SPI Transactions (see Table 75 on page 85)	Related Octal Transactions (see Table 76 on page 88)
EnduraFlex Architecture Selection Registers (EFX4O,EFX3O,EFX2O,EFX1O,EFX0O) (see Section 5.24 EnduraFlex Architecture Selection Register (EFXx) on page 82)	Read Any Register (RDARG_C_0)	Read Any Register (RDARG_4_0)
	Write Any Register (WRARG_C_1)	Write Any Register (WRARG_4_1)

4.3 Interface CRC

Interface CRC performs a hardware accelerated CRC calculation on the communication between a host and the device, ensuring the integrity of information transferred. A CRC is an error-detecting code commonly used in devices to detect accidental changes to raw data. Interface CRC protection is a configuration option (ICEV[0] - ITCRCE).

The Interface CRC method in HL-T/HS-T family devices relies entirely on the host to verify the CRC check-value and take appropriate actions. The device calculates the CRC check-value which the host reads using the Read Interface CRC transaction (RDCRC_4_0). The check-value calculated includes all transaction contents while CS# is LOW, namely command, address and data. This CRC checksum can be generated across either a single transaction or a set of transactions. The only limitation is that the data size over which the slave is calculating the CRC checksum must be less than 2^{32} bits.

The host must also calculate the CRC check-value over the same transaction sequence. When ready, the host can read the device's calculated CRC check-value and compare it with its own. If there is a mismatch, the host can choose to repeat the complete transaction sequence.

Figure 35. CRC Calculation Overview

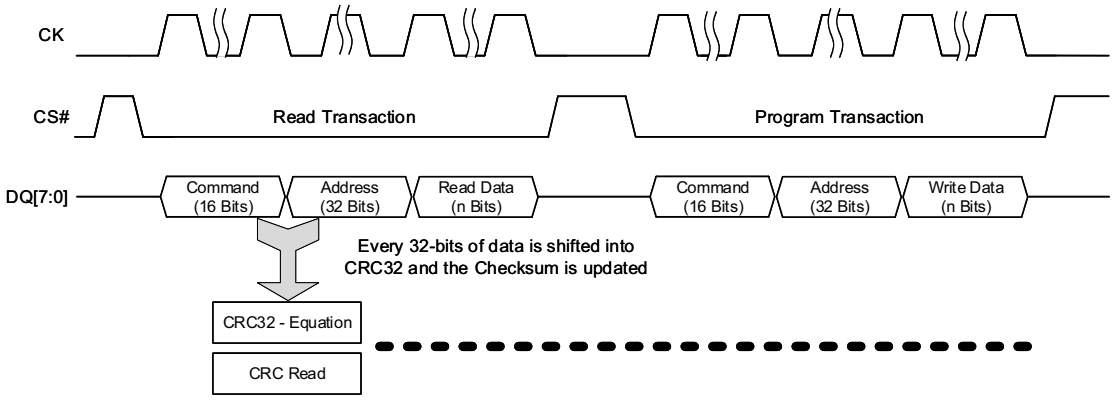

Note At the end of the CRC read transaction, the device resets the CRC check-value and reinitializes the CRC polynomial.

CRC32 Polynomial: $X^{32} + X^{28} + X^{27} + X^{26} + X^{25} + X^{23} + X^{22} + X^{20} + X^{19} + X^{18} + X^{14} + X^{13} + X^{11} + X^{10} + X^{9} + X^{8} + X^{6} + 1$

Note The CRC polynomial between the host and the device must be identical.

Note Interface CRC is supported with Octal DDR protocol only.

Note The Interface CRC check-value will reset to 0xFFFFFFFFh under the following conditions:

- POR
- Hardware Reset
- Software Reset
- CS# Signaling Reset
- A read of the Interface CRC check-value
- Exit from Deep Power Down

Note If a transaction is aborted before the command is legally received, i.e. the transfer length is cut short by CS# de-asserting early - the transferred data will still be clocked into the CRC check-value, but it is no longer guaranteed. When using Interface CRC, only valid, non-aborted transactions must be used.

Note It is required to read Interface CRC value before any Volatile Status Register read and Clear Interface CRC value after any Volatile Status Register read(s).

Note When Interface CRC is disabled, the interface CRC register value becomes indeterminate. It is recommended to read the interface CRC register before disabling the interface CRC feature, and again after enabling the interface CRC feature to re-initialize the CRC calculation.

4.3.1 Read

The read operation is performed when the host specifies the READ transaction while CS# is LOW. The device then provides the data from the memory based on the address. Any number of bytes can be read (burst reads) to consecutive addresses without issuing a new READ transaction.

For transaction protection, the device performs the CRC over the entire transaction sequence (CS# LOW state) using the CRC32 polynomial. Once the CS# is brought HIGH, the CRC calculation is stopped and the check-value latched into the CRC Register. If multiple READ transactions are executed by the host, the device continues updating the CRC check-value between every CS# LOW cycle.

Figure 36. Read CRC Protection

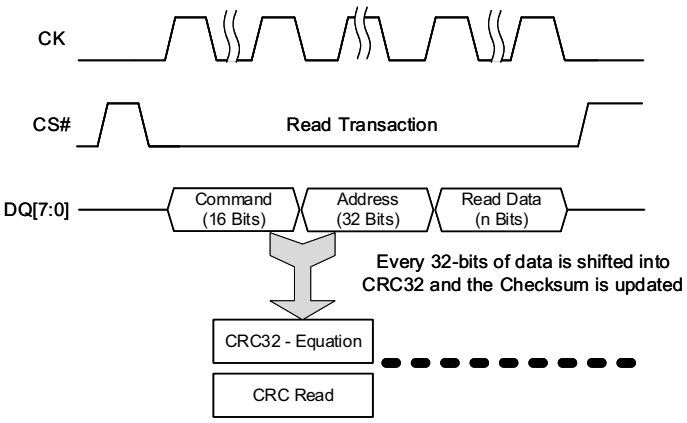

Note Back to back Interface CRC read transaction will not show the CRC checksum value being reset. At the end of each read interface CRC register transaction, the interface CRC register will get reset and updates itself with new CRC checksum value after getting a transaction with valid input data for at least three clock cycles.

4.3.2 Program / Erase

The program operation is performed when the host specifies a program transaction while CS# is LOW. Up to 256 bytes / 512 bytes can be written (burst writes) to consecutive addresses without issuing a new program transaction. The erase operation is performed when the host specifies an erase transaction while CS# is LOW. Either a single sector or the complete device can be erased.

For transaction protection, the slave device will perform the CRC over the entire instruction sequence (CS# LOW state) using the proposed CRC32 polynomial. Once the CS# is brought HIGH to complete the Program / Erase transaction, the CRC calculation will be stopped and the checksum latched into the CRC Register. If multiple Program / Erase transactions are executed by the host, the slave will continue updating the CRC checksum between every CS# LOW cycle.

Figure 37. Program CRC Protection

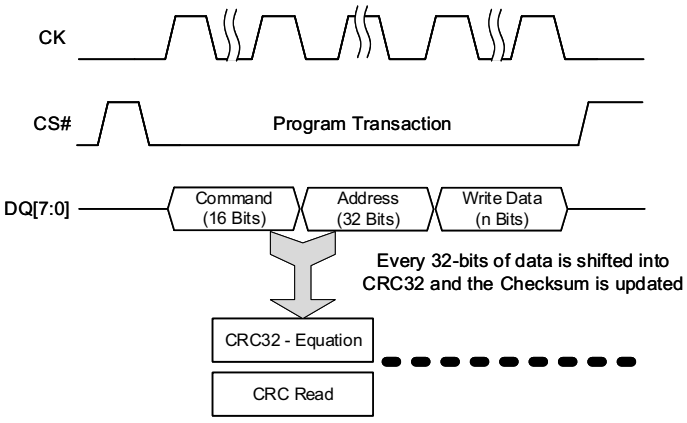

The host device will read the CRC checksum from the slave device using the Read Interface CRC transaction. The slave device will include the RDCRC_4_0 transaction as part of the CRC checksum and then place the checksum data on the data bus. If the host device upon receiving the slave's CRC checksum finds a mismatch with its own calculated CRC checksum, it can re-issue the Program / Erase transaction to the slave device. For Flash, multiple Program / Erase to the same location due to CRC checksum errors will affect data endurance. Figure 38 shows the solution to this issue.

Figure 38. Interface CRC Flow for PROGRAM and ERASE Transactions

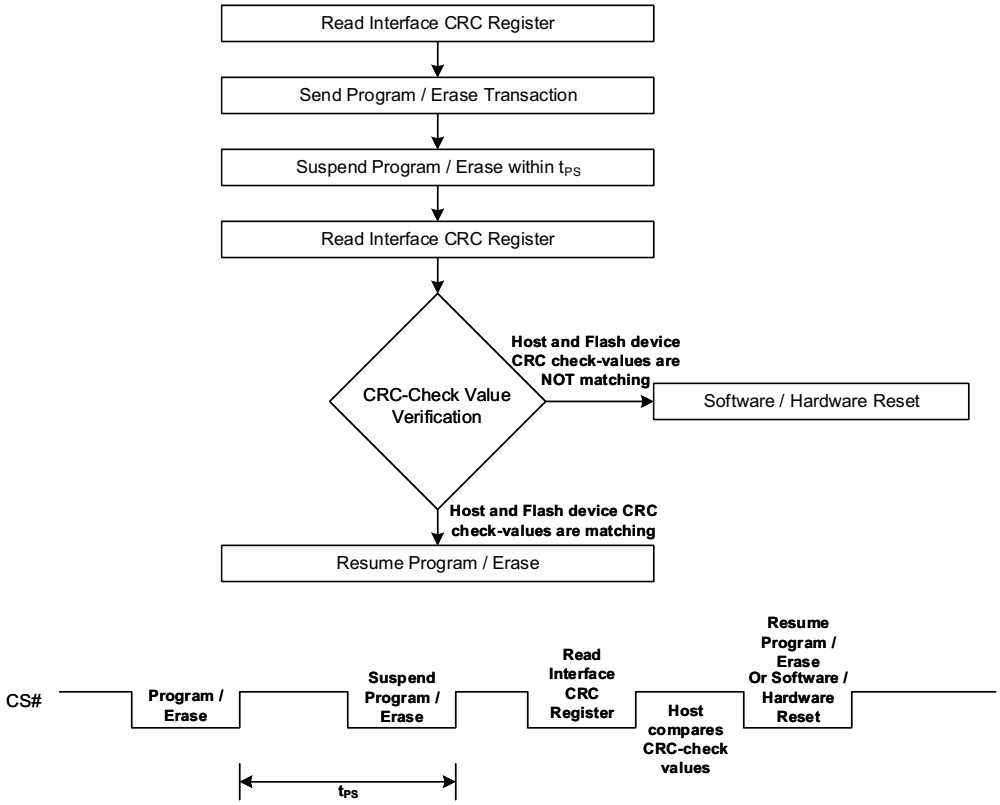

4.3.3 *Interface CRC Related Registers and Transaction*

Table 15. Interface CRC Related Registers and Transactions

Related Registers	Related SPI Transactions (see Table 75 on page 85)	Related Octal Transactions (see Table 76 on page 88)
Interface CRC Enable Register (ICEV) (see Table 55 on page 74)	N/A	Read Interface CRC Register (RDCRC_4_0)

4.4 Data Integrity CRC

HL-T/HS-T family devices have a group of transactions to perform a hardware accelerated CRC calculation over a user defined address range in the memory array. The calculation is another type of embedded operation similar to programming or erase in which the device is busy while the calculation is in progress. The CRC operation uses the same CRC32 polynomial as Interface CRC to determine the CRC check-value.

CRC32 Polynomial: $X^{32} + X^{28} + X^{27} + X^{26} + X^{25} + X^{23} + X^{22} + X^{20} + X^{19} + X^{18} + X^{14} + X^{13} + X^{11} + X^{10} + X^{9} + X^{8} + X^{6} + 1$

The check-value generation sequence is started by entering the DICHK_4_1 transaction. The transaction includes loading the beginning address into the CRC Start Address Register and identifying the beginning of the address range that will be covered by the CRC calculation. The transaction also includes loading the ending address into the CRC End Address Register. Bringing CS# HIGH starts the CRC calculation. The CRC process calculates the check-value on the data contained at the starting address through the ending address.

During the calculation period the device goes into the Busy state (STR1V[0] - RDYBSY = 1). Once the check-value calculation is completed, the device returns to the Ready state (STR1V[0] - RDYBSY = 0) and the calculated check-value is available to be read. The check-value is stored in the Data Integrity CRC Register (DCRV[31:0]) and can be read using Read Any Register transaction.

The check-value calculation can only be initiated when the device is in Standby State; and once started it can be suspended with the CRC Suspend transaction (SPEPD_0_0) to read data from the memory array. During the Suspended state the CRC Suspend Status Bit in the Status Register 2 will be set (STR2V[4] - DICRCS = 1). Once suspended, the host can read the Status Register, read data from the array and can resume the CRC calculation by using the CRC Resume transaction RSEPD_0_0.

The Ending Address (ENDADD) must be at least two addresses higher than the Starting Address (STRADD). If ENDADD < STRADD + 3, the check-value calculation will abort and the device will return to the Ready state (STR1V[0] - RDYBSY = 0). Data Integrity CRC abort status bit will be set (STR2V[3] - DICRCA = 1) to indicate the aborted condition. The DICRCA bit can be cleared, once set, by Software reset or a valid subsequent CRC command execution. If ENDADD < STRADD + 3, the check-value will hold indeterminate data.

Note Any invalid transaction during CRC check-value calculation can corrupt the check-value data.

4.4.1 Data Integrity Check Related Registers and Transactions

Table 16. Data Integrity CRC Related Registers and Transactions

Related Registers	Related SPI Transactions (see Table 75 on page 85)	Related Octal Transactions (see Table 76 on page 88)
Status Register 1 (STR1N, STR1V) (see Table 41 on page 65)	Data Integrity Check (DICHK_4_1)	Data Integrity Check (DICHK_4_1)
Status Register 2 (STR2V) (see Table 44 on page 67)	Suspend Erase/Program/Data Integrity Check (SPEPD_0_0)	Suspend Erase/Program/Data Integrity Check (SPEPD_0_0)
Data Integrity CRC Check-Value Register (DCRV) (see Table 57 on page 75)	Resume Erase/Program/ Data Integrity Check (RSEPD_0_0)	Resume Erase/Program/ Data Integrity Check (RSEPD_0_0)

4.5 Data Protection Schemes

Data protection is required to safeguard against unintended changes to stored data and device configuration. This includes inadvertent erasing or programming the memory array as well as writing to the configuration registers, which can alter the functionality of the device. Three types of protection schemes are discussed which range from protecting either a single or a group of sectors to either a portion or the complete memory array. Figure 39 shows an overview of different protection schemes along with applicable data regions.

Figure 39. Data Protection and Security (Write/Program/Erase) Schemes

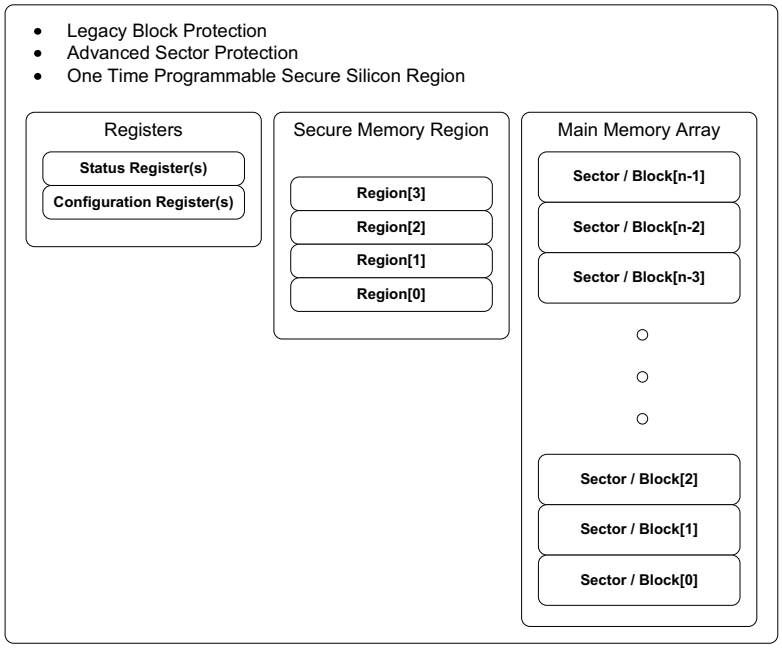

4.5.1 Legacy Block Protection (LBP)

The Legacy Block Protection (LBP), is a block based data protection scheme. LBP supports compatibility with legacy serial NOR Flash devices. LBP provides protection for data in the memory array and device configuration by protecting Status and Configuration registers.

4.5.1.1 Memory Array Protection

The protection for the memory array is with block size selection which is achieved through a combination of bits present in the Status Register 1 (STR1N[4:2]/STR1V[4:2] - LBPROT[2:0]) and Configuration Register 1 (CFR1N[5]/CFR1V[5] - TBPROT).

Table 17 provides the LBP memory array block selection summary.

Table 17. Legacy Block Memory Array Protection Selection

CFR1N[5]/ CFR1V[5] TBPROT	STR1N[4]/ STR1V[4] LBPROT[2]	STR1N[3]/ STR1V[3] LBPROT[1]	STR1N[2]/ STR1V[2] LBPROT[0]	Memory Array Block Size	256 Mb (KBs)	512 Mb (KBs)	1 Gb (KBs)
0	0	0	0	None	0	0	0
0	0	0	1	Upper 64th	512	1024	2048
0	0	1	0	Upper 32nd	1024	2048	4096
0	0	1	1	Upper 16th	2048	4096	8192
0	1	0	0	Upper 8th	4096	8192	16384
0	1	0	1	Upper 4th	8192	16384	32768
0	1	1	0	Upper Half	16384	32768	65536
0	1	1	1	All sectors	32768	65536	131072
1	0	0	0	None	0	0	0
1	0	0	1	Lower 64th	512	1024	2048
1	0	1	0	Lower 32nd	1024	2048	4096
1	0	1	1	Lower 16th	2048	4096	8192
1	1	0	0	Lower 8th	4096	8192	16384
1	1	0	1	Lower 4th	8192	16384	32768
1	1	1	0	Lower Half	16384	32768	65536
1	1	1	1	All sectors	32768	65536	131072

4.5.1.2 Configuration Protection

LBP has selection bits in Configuration Register 1 (CFR1N[4,0]/CFR1V[4,0] - PLPROT, TLPROT), which either permanently or temporarily protect Status and Configuration registers, thereby again protecting the device's configuration. The temporary protection remains in effect until the next power down or hardware reset or CS# signaling reset.

Table 18. Option 2 - Legacy Block Configuration Protection Selection[15]

CFR1N[4]/CFR1V[4] PLPROT	CFR1N[0]/CFR1V[0] TLPROT	Register Protection Status
0	0	Status and Configuration registers are unprotected
1	0	Status and Configuration registers are permanently protected (TBPROT, LBPROT[2:0], SP4KBS, TB4KBS)
X	1	Status and Configuration registers are Protected till next Power down (TBPROT, LBPROT[2:0], SP4KBS, TB4KBS)

Note
15. Protecting the configuration also protects the memory array blocks which have been selected for protection.

4.5.1.3 Legacy Block Protection Flowchart

The LBP protection scheme flowchart is shown in Figure 40.

Figure 40. Legacy Protection Flowchart

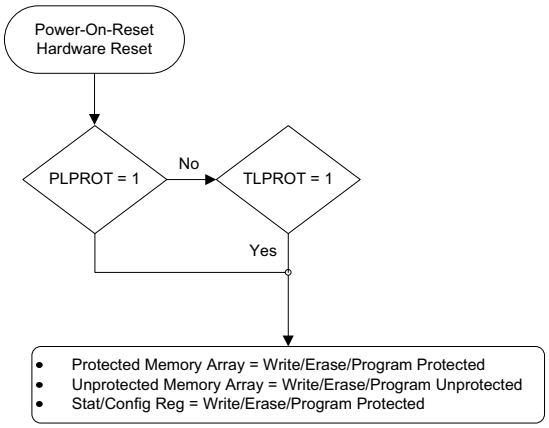

4.5.1.4 LBP Related Registers and Transactions

Table 19. LBP Related Registers and Transactions

Related Registers	Related SPI Transactions (see Table 75 on page 85)	Related Octal Transactions (see Table 76 on page 88)
Status Register 1 (STR1N, STR1V) (see Table 41 on page 65)	Read Any Register (RDARG_C_0)	Read Any Register (RDARG_4_0)
Configuration Register 1 (CFR1N, CFR1V) (see Table 45 on page 68)	Write Any Register (WRARG_C_1)	Write Any Register (WRARG_4_1)
	Read Status Register 1 (RDSR1_0_0)	Read Status Register 1 (RDSR1_4_0)
	Write Enable (WRENB_0_0)	Write Enable (WRENB_0_0)

4.5.2 Advanced Sector Protection (ASP)

The Advanced Sector Protection (ASP) scheme allows each memory array sector to be independently controlled for protection against erasing or programming, either by volatile or nonvolatile locking features. The nonvolatile locking configuration can also be locked, as well as password-protected.

The main memory array sectors are protected against erase and program by volatile (DYB) and nonvolatile (PPB) protection bit pairs. Each DYB/PPB bit pair can be individually set to '0' protecting the related sector or cleared to '1' unprotecting the related sector. DYB protection bits can be set and cleared as often as needed whereas PPB bits being nonvolatile must adhere to their respective technology based endurance requirements. Figure 41 shows an overview of ASP.

Figure 41. Advanced Sector Protection (Nonvolatile)

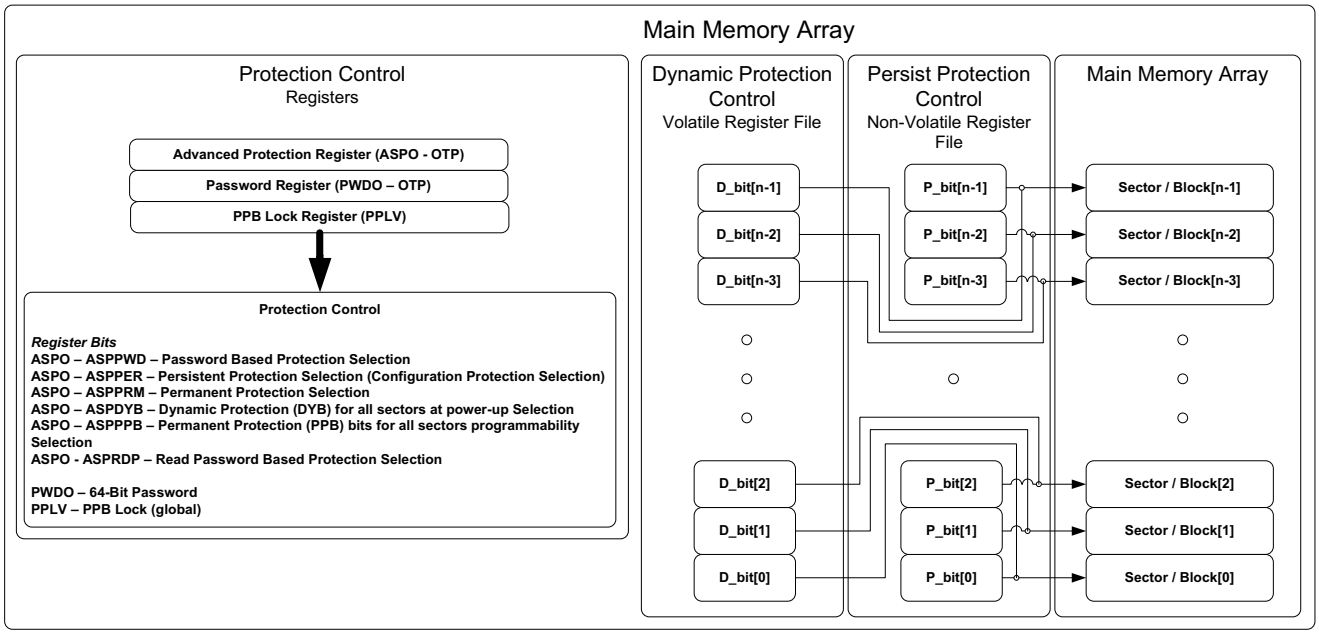

Figure 42. DYB and PPB Protection Control

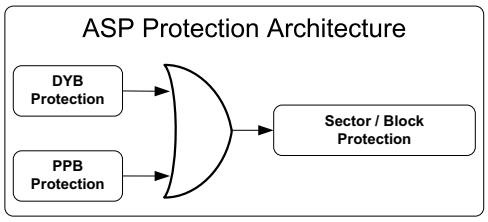

ASP provides a rich set of configuration options producing multiple data protection schemes which can be employed based on design or system needs. These configuration options are discussed in Section 4.5.2.1 Configuration Protection on page 37 through Section 4.5.2.10 ASP Related Registers and Transactions on page 41.

4.5.2.1 Configuration Protection

ASP provides provisions to protect device's configuration through Persistent Protection scheme. Selecting bit 1 in Advanced Sector Protection Register (ASPO[1] - ASPPER) selects the Persistent Protection scheme and protects the following registers or register bits from write or program.

- CFR1V[6,5,4,2]/CFR1N[6,5,4,2] - SP4KBS, TBPROT, PLPROT, TB4KBS
- CFR3N[3]/CFR3V[3] - UNHYSA
- ASPO[15:0]
- PWDO[63:0]

The Persistent Protection scheme flowchart is shown in Figure 43.

Figure 43. Persistent Protection Scheme Flowchart

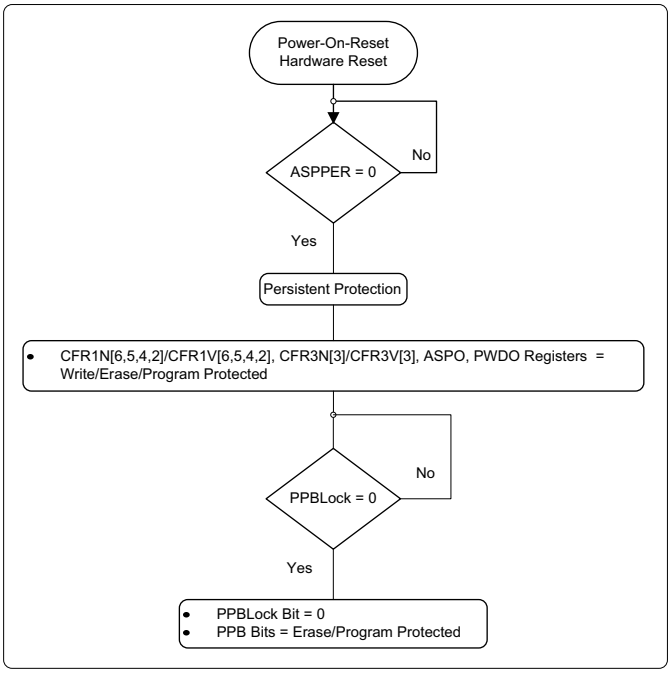

4.5.2.2 Dynamic DYB (Volatile) Sector Protection

Dynamic Protection Bits (DYB) are volatile and unique for each sector and can be individually modified. DYBs only control protection for sectors that have their PPBs cleared. By issuing the DYB Write transaction, the DYB are set to 0 or cleared to 1, thus placing each sector in the protected or unprotected state respectively. This feature allows software to easily protect sectors against inadvertent changes, yet does not prevent the easy removal of protection when changes are needed. The DYB can be set to 0 or cleared to 1 as often as needed

In Dynamic Sector Protection scheme, an option is provided to reset all DYB volatile protection bits to '0' upon power up (protected), essentially protecting all sectors from erase or program. Selecting bit 4 in the Advanced Sector Protection Register (ASPO[4] - ASPDYB) selects the Dynamic Protection (DYB) for all sectors at power-up protection scheme. These DYB bits can be individually set to '1', if desired. The Dynamic Sector Protection scheme flowchart showing power up protection is shown in Figure 44.

Figure 44. Dynamic Sector Protection Scheme Flowchart

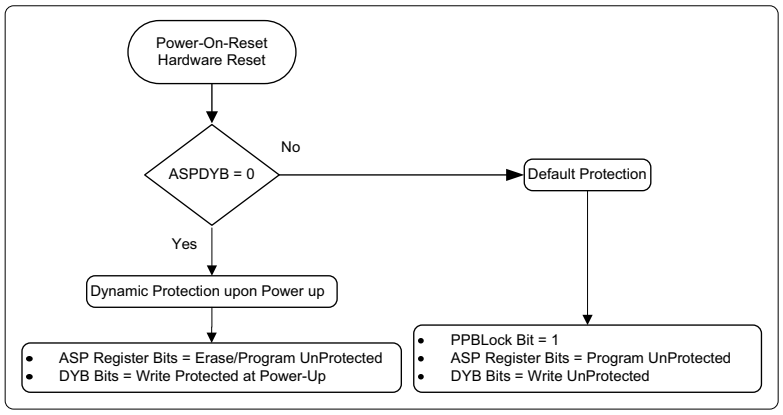

4.5.2.3 Permanent/Temporary PPB (Nonvolatile) Sector Protection

Each nonvolatile bit (PPB) provides nonvolatile protection for an individual memory sector, which remains locked (protection enabled) until its corresponding bit is cleared to 1. There are two options to control the PPB based nonvolatile selection in ASP, namely Permanent and Temporary.

4.5.2.4 Permanent PPB Protection Scheme

The PPB are located in a separate nonvolatile flash array. One of the PPB bits is assigned to each sector. When a PPB is programmed to 0 its related sector is protected from program and erase operations. The PPB are programmed individually but must be erased as a group, similar to the way individual words may be programmed in the main array but an entire PPB sector must be erased at the same time. Programming a PPB bit requires the typical word programming time. During a PPB bit programming operation or PPB bit erasing, the Status Register can be accessed to determine when the operation has completed. Erasing all the PPBs requires typical sector erase time.

Permanent PPB based protection scheme, as the name applies, is permanent and can never be altered. Once the PPB architecture is decided, selecting bit 0 in Advanced Sector Protection Register (ASPO[0]) enables the Permanent Protection for all PPB bits essentially disabling all PPB erase and program operations. ASPO is also protected from write or program.

The Permanent PPB Protection scheme flowchart is shown in Figure 45.

Figure 45. Permanent PPB Sector Protection Flowchart

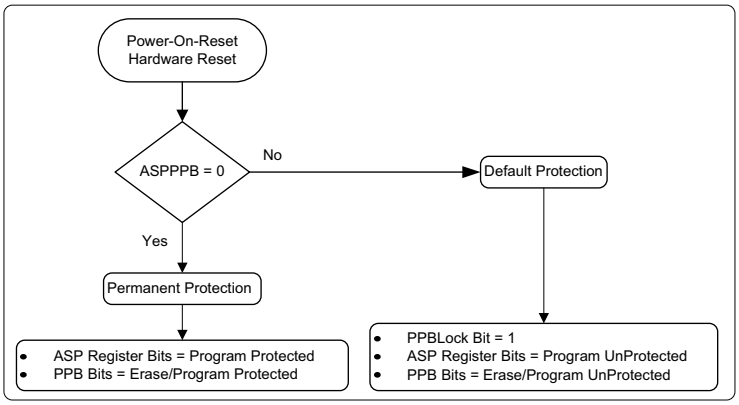

4.5.2.5 Temporary PPB Protection Scheme

PPB based nonvolatile protection architecture can be temporarily locked where erasing and programming of the individual PPB bits is inhibited. The Persistent Protection Lock Bit (PPBLock) is a volatile bit for protecting all PPB bits. When cleared to 0, it locks all PPBs and when set to 1, it allows the PPBs to be changed. There is only one PPB Lock Bit per device. The PPBLock transaction (WRPLB_0_0) is used to clear the bit to 0. The PPB Lock Bit must be cleared to 0 only after all the PPBs are configured to the desired settings. The PPB Lock Bit is set to 1 during POR or a Hardware Reset. When cleared with the PPBLock transaction, no software command sequence can set PPBLock, only another Hardware Reset or Power-Up can set PPBLock.

Note Temporary PPB Protection does not require any ASP configuration.

4.5.2.6 Password Protection Scheme

Password Protection scheme allows an even higher level of security by requiring a 64-bit password for setting PPBLock. In addition to this password requirement, after Power-Up or Hardware Reset, the PPB Lock Bit is cleared to 0 to ensure protection at Power-Up. Successful execution of the Password Unlock command by entering the entire password sets the PPB Lock Bit to 1, allowing for sector PPB modifications. Selecting bit 2 in Advanced Sector Protection Register (ASPO[2] - ASPPWD) selects the Password Protection scheme. Password Protection scheme also protects ASPO from write or program.

Note A password must be programmed before selecting the password protection scheme. The password unlock SPI transaction (PWDUL_0_1) or Octal transaction (PWDUL_4_1) is used to provide a password for comparison.

The Password Protection scheme flowchart is shown in Figure 46.

Figure 46. Password Protection Scheme Flowchart

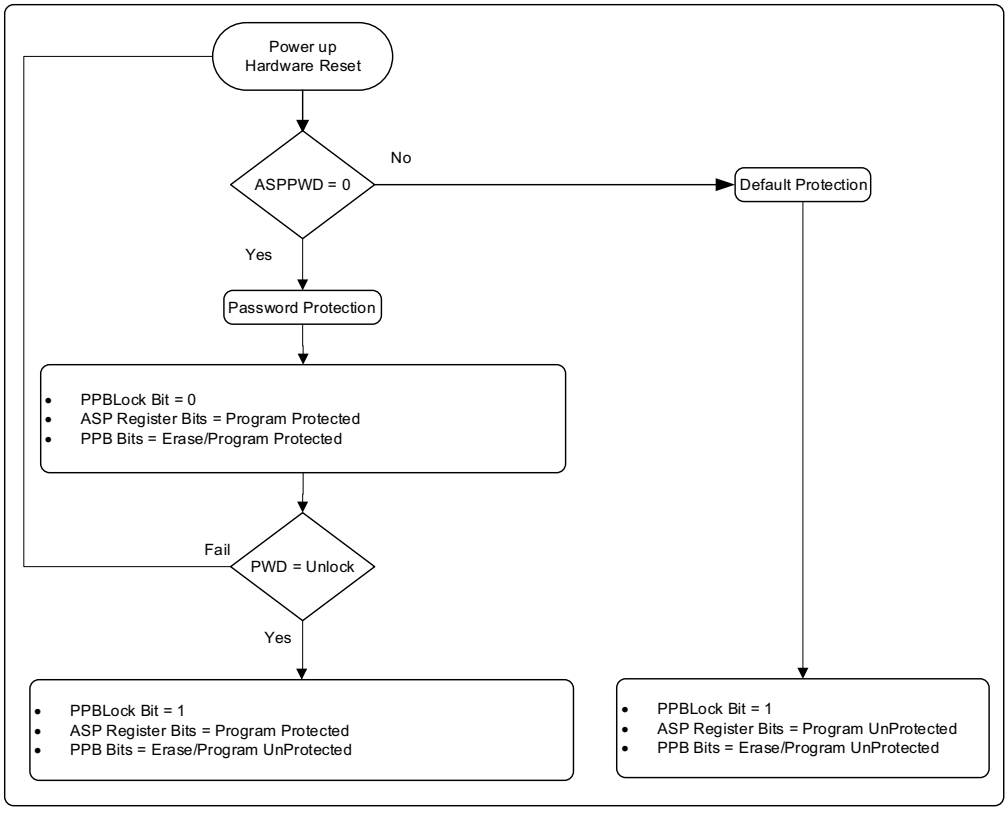

4.5.2.7 Read Password Protection Scheme

The Read Password Protection scheme replaces the Password Protection scheme and provides the most data protection. The Read Password Protection scheme enables protecting the Flash Memory Array from read, program, and erase. Only the lowest or highest (256-KB) sector address range, selected by bit 5 of Configuration Register 1 (CFR1x[5] - TBPROT), remains readable until a successful Password Unlock transaction is complete. A '0' selects from the top most sector and a '1' selects from the bottom most sector irrespective of the sector address supplied in the read transaction. Note that reads from the read-protected portion of the array will alias back to the readable sector.

Note A password must be programmed before selecting the Read Password protection scheme. The password unlock SPI transaction (PWDUL_0_1) or Octal transaction (PWDUL_4_1) is used to provide a password for comparison.

The Read Password Protection scheme flowchart is shown in Figure 47.

Figure 47. Read Password Protection Scheme Flowchart

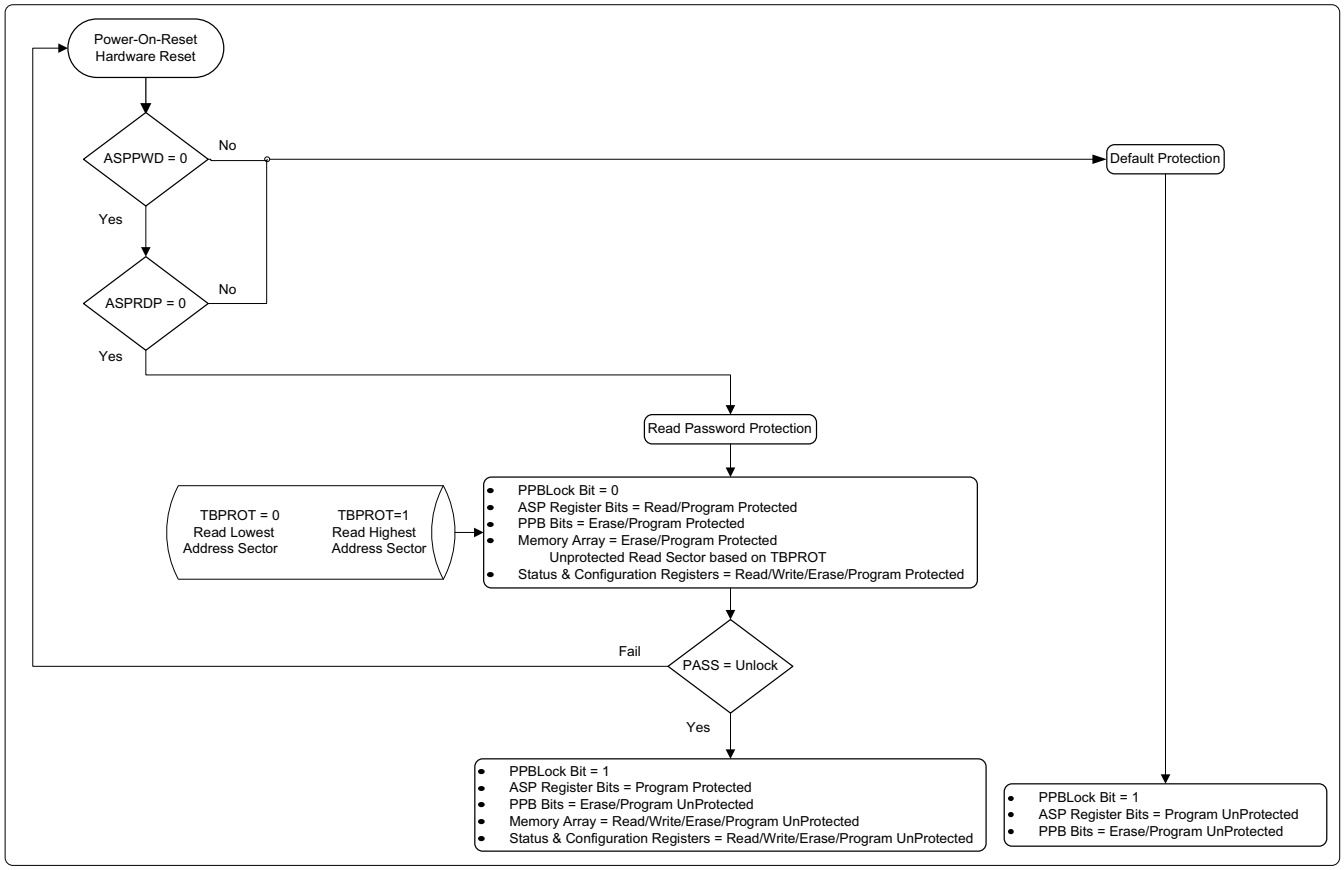

4.5.2.8 PPB Bits - One-Time Programmable Selection

ASP provides a configuration option to permanently disable the PPB erase transaction (ERPPB_0_0). This makes all PPB bits one-time programmable. With this option, once the PPB protection is selected, it can never be changed. Selecting bit 3 in Advanced Sector Protection Register (ASPO[3] - ASPPPB) makes PPB bits OTP.

4.5.2.9 General ASP Guidelines

- Persistent protection (ASPPER) and Password protection (ASPPWD) are mutually exclusive - only one option can be programmed.
- Read Password protection (ASPRDP) if desired, must be programmed at the same time as Password protection (ASPPWD).
- Once the password is programmed and verified, the Password Protection scheme (ASPPWD) must be programmed (to 0) to prevent reading the password.
- When the Read Password scheme and Password Protection scheme are enabled (i.e. ASPO[5] - ASPRDP, ASPO[2] - ASPPWD are programmed to 0), then all addresses are redirected to the Boot Sector until the password unlocking sequence is properly entered with the correct password. At which time, the Read Password Mode is disabled and all addressing will select the proper location.
- Programming memory spaces or writing registers is not allowed when Read Password Protection Mode is active.

4.5.2.10 ASP Related Registers and Transactions

Table 20. ASP Related Registers and Transactions

Related Registers	Related SPI Transactions (see Table 75 on page 85)	Related Octal Transactions (see Table 76 on page 88)
Advanced Sector Protection Register (ASPO) (see Table 61 on page 77)	Read Dynamic Protection Bit (RDDYB_4_0)	Read Dynamic Protection Bit (RDDYB_4_0)
Configuration Register 1 (CFR1N, CFR1V) (see Table 45 on page 68)	Write Dynamic Protection Bit (WRDYB_4_1)	Write Dynamic Protection Bit (WRDYB_4_1)
	Read Persistent Protection Bit (RDPPB_4_0)	Read Persistent Protection Bit (RDPPB_4_0)
	Program Persistent Protection Bit (PRPPB_4_0)	Program Persistent Protection Bit (PRPPB_4_0)
	Erase Persistent Protection Bit (ERPPB_0_0)	Erase Persistent Protection Bit (ERPPB_0_0)
	Write PPB Protection Lock Bit (WRPLB_0_0)	Write PPB Protection Lock Bit (WRPLB_0_0)
	Read Password Protection Mode Lock Bit (RDPLB_0_0)	Read Password Protection Mode Lock Bit (RDPLB_4_0)
	Password Unlock (PWDUL_0_1)	Password Unlock (PWDUL_4_1)
	Write Enable (WRENB_0_0)	Write Enable (WRENB_0_0)
	Read Any Register (RDARG_C_0)	Read Any Register (RDARG_4_0)
	Write Any Register (WRARG_C_1)	Write Any Register (WRARG_4_1)

4.5.3 Secure Silicon Region (SSR)

Secure Silicon Region (SSR) is a 1024 byte memory region (separate from the main memory array). The 1024 bytes are divided into 32, individually lockable 32-byte regions. Figure 48 provides an overview of SSR.

Figure 48. OTP Protection (Nonvolatile)

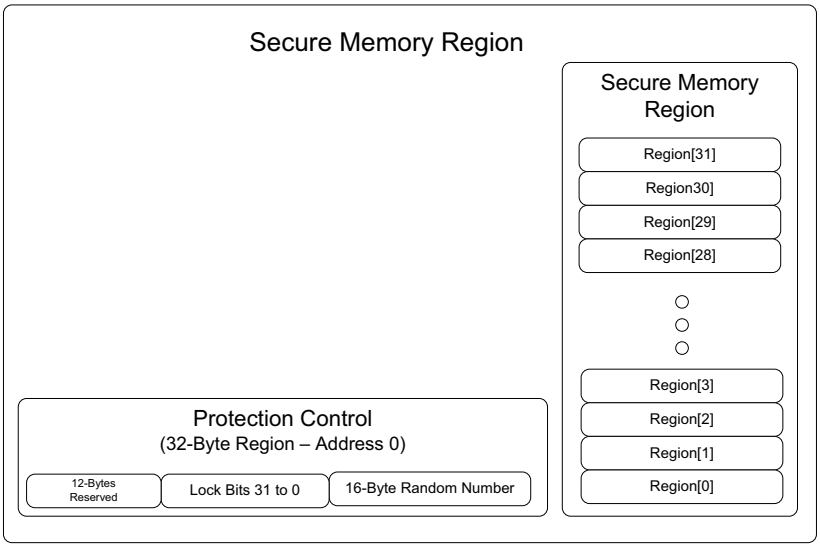

The first 32-byte region (starting at address 0) provides the protection mechanism for the other 32-byte regions. The sixteen lowest bytes of this region contain a 128-bit random number. The random number cannot be written to, erased or programmed. The next four bytes (32 bits in total) of this region provide protection from programming if set to '0' for the remaining 32-byte regions - one bit per 32-byte region. All other bytes are reserved.

Note Attempting to Erase or Program the 128-bit random number will result in ERSERR or PRGERR respectively. A hardware Reset is required to bring the device back to Standby mode.

4.5.3.1 SSR Related Registers and Transactions

Table 21. SSR Related Registers and Transactions

Related Registers	Related SPI Transactions (see Table 75 on page 85)	Related Octal Transactions (see Table 76 on page 88)
N/A	Program Secure Silicon Region (PRSSR_4_1)	Program Secure Silicon Region (PRSSR_4_1)
	Read Secure Silicon Region (RDSSR_4_0)	Read Secure Silicon Region (RDSSR_4_0)

4.6 SafeBoot

Semper Flash memory devices contain an embedded microcontroller which is used to initialized the device, manage embedded operations, and perform other advanced functionality. An initialization failure of this embedded microcontroller or corruption of the nonvolatile configuration registers can render the flash device unusable. Baring a catastrophic event, such as permanent corruption of the embedded microcontroller firmware, it is possible to recover the device.

The SafeBoot feature allows Status Register polling to detect an embedded microcontroller initialization failure or configuration register corruption through error signatures.

4.6.1 Microcontroller Initialization Failure Detection

If the microcontroller embedded in the flash device fails to initialize, a hardware reset can recover the device, unless it is a catastrophic failure. This hardware reset must be initiated by the Host controller. Upon detecting a failed microcontroller initialization, the Flash device automatically reverts to its Default Boot mode (1S-1S-1S) and provides a failure signature in its Status Register.

Table 22 shows the device's Status Register bits upon detecting an initialization failure.

Table 22. Status Register 1 Power-On Detection Signature

Bit	Field Name	Function	Detection Signature
STR1V[7]	RESRVD	Reserved for Future Use	0
STR1V[6]	PRGERR	Programming Error Status Flag	1
STR1V[5]	ERSERR	Erasing Error Status Flag	1
STR1V[4]	LBPROT[2:0]	Legacy Block Protection based memory Array size selection **Note**: LBPRIT[2:0] can be anything from 000 to 111 based on Block Protection configuration	0
STR1V[3]			0
STR1V[2]			0
STR1V[1]	WRPGEN	Write/Program Enable Status Flag	0
STR1V[0]	RDYBSY	Device Ready/Busy Status Flag	1

Table 23. Interface Configuration upon Detecting Power-On Failure[16]

Interface	Transactions Supported	Register Type	Address (# of Bytes)	Frequency of Operation	Register Read Latency (# of Clock Cycles)	Output Impedance
SPI (1S-1S-1S)	Read Status Register 1 Read Any Register	Status Register (Volatile Only)	4	Maximum (allowed for Read Status Register 1 and Read Any Register transaction)	2	45Ω

Note
16. For reading the Status Register, providing the nonvolatile Status Register address to Read Any Register transaction will produce indeterminate results.

4.6.1.1 Host Polling Behavior

The host will need to go through a Status Register polling sequence to determine if an initialization failure has occurred in the device. The flowchart for the sequence is shown in Figure 49.

Figure 49. Host Polling Sequence for Microcontroller Initialization Failure Detection

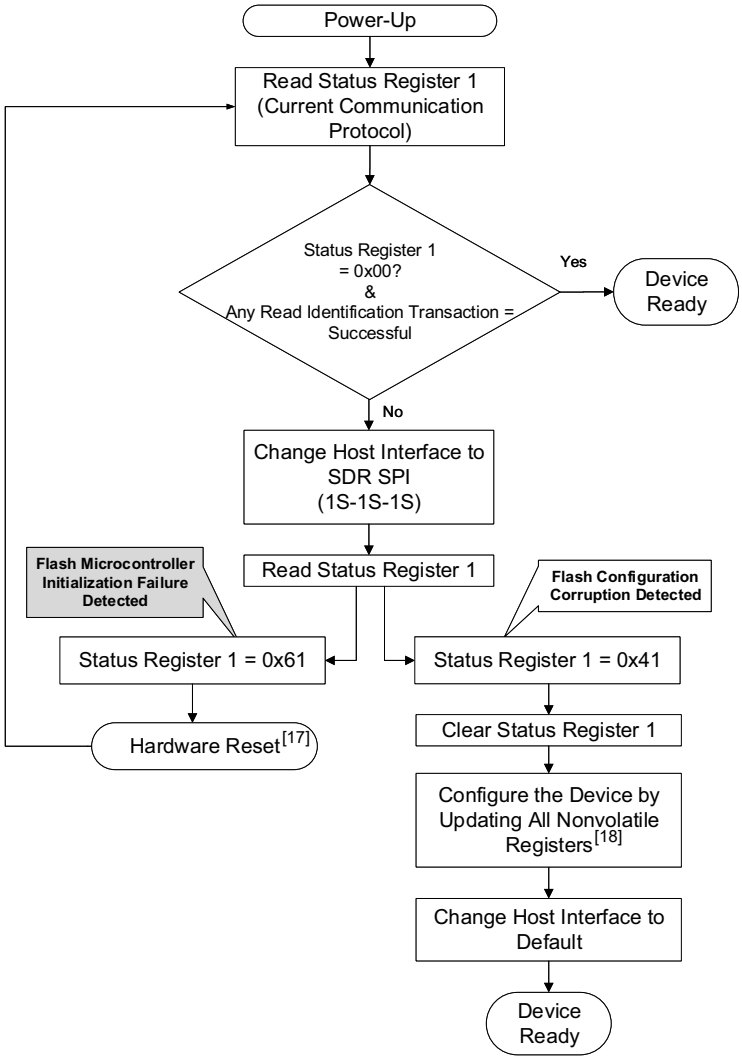

Note The polling sequence must start from the higher I/O interface configuration to lower I/O interface configuration only. For example, 8D-8D-8D to 1S-1S-1S.

4.6.1.2 Microcontroller Initialization Failure Detection Related Registers and Transactions

Table 24. Microcontroller Initialization Failure Related Registers and Transactions

Related Registers	Related SPI Transactions (see Table 75 on page 85)	Related Octal Transactions (see Table 76 on page 88)
Status Register 1 Volatile (STR1V) (see Table 41 on page 65)	Read Any Register (RDARG_C_0)	N/A
	Read Status Register -1 (RDSR1_0_0)	

Notes
17. If you have Vcc within specifications and a hardware reset does not resolve the issue, replace the flash device.
18. As soon as first Write Any Register transaction updates the Nonvolatile Status Register or Configuration Register, all remaining nonvolatile status and configuration registers go back to the predefined state (STR1N = 0x00, CFR1N = 0x00, CFR2N = 0x00, CFR3N = 0x00, CFR4N = 0x00, CFR5N = 0x40). It is recommended to initiate SafeBoot recovery operation by configuring the Address byte length and latency followed by rest configurations.

4.6.2 Configuration Corruption Detection

If during device's configuration update, such as writing to a nonvolatile register, a power loss occurs or a hardware reset is initiated, the write register transaction will get interrupted. The device will return to Standby mode, but the nonvolatile register data is most likely corrupted since the embedded write operation was prematurely terminated. During the next power-up, the configuration corruption is detected and the device reverts to its Default Boot mode (1S-1S-1S) and allows rewriting the configuration again. The device will maintain the configured protection scheme.

Table 25 shows the device's Status Register bits upon detecting a configuration corruption.

Table 25. Status Register 1 Configuration Corruption Detection Signature

Bit	Field Name	Function	Detection Signature
STR1V[7]	RESRVD	Reserved for Future Use	0
STR1V[6]	PRGERR	Programming Error Status Flag	1
STR1V[5]	ERSERR	Erasing Error Status Flag	0
STR1V[4]	LBPROT[2:0]	Legacy Block Protection based memory Array size selection **Note** LBPRIT[2:0] can be anything from 000 to 111 based on Block Protection configuration	0
STR1V[3]			0
STR1V[2]			0
STR1V[1]	WRPGEN	Write/Program Enable Status Flag	0
STR1V[0]	RDYBSY	Device Ready/Busy Status Flag	1

Table 26. Interface Configuration upon Detecting Configuration Corruption

Interface	Transactions Supported	Address (# of Bytes)	Frequency of Operation	Register Read Latency (# of Clock Cycles)	Output Impedance
SPI (1S-1S-1S)	All SPI (1S-1S-1S) Transactions	4	Maximum	2	45Ω

4.6.2.1 Host Polling Behavior

The host will need to go through a Status Register polling sequence to determine if a Configuration corruption has occurred in the device. The flowchart for the sequence is shown in Figure 50.

Figure 50. Host Polling Sequence for Configuration Corruption Detection

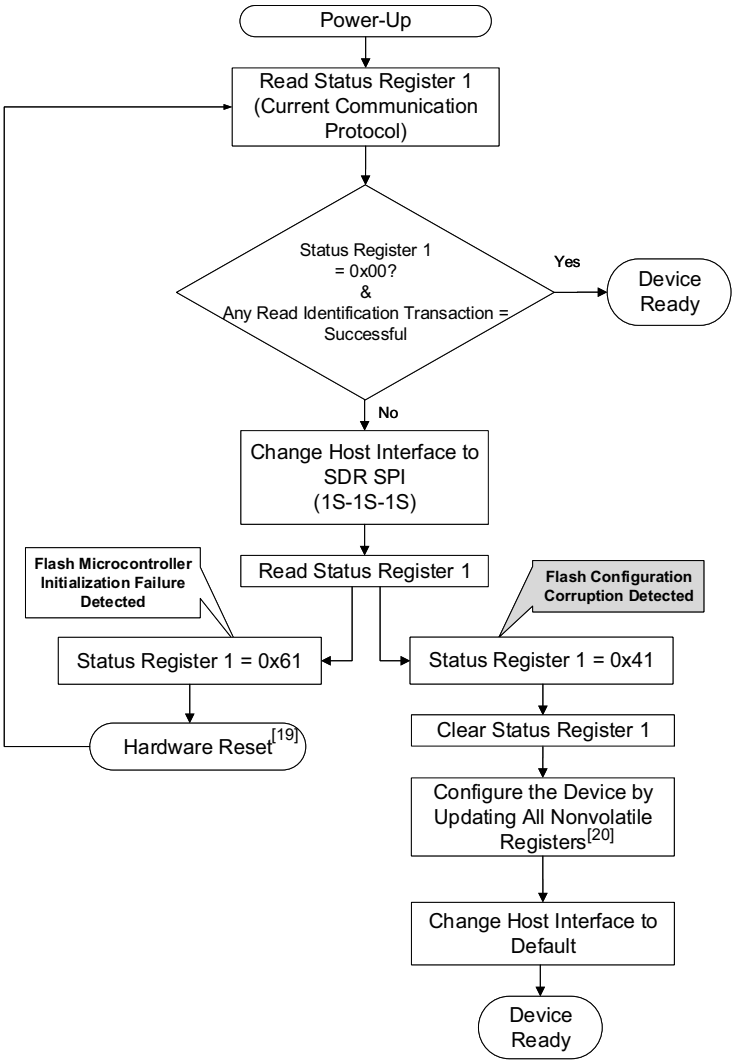

Note The polling sequence must start from a higher I/O interface configuration to a lower I/O interface configuration. As an example, 8D-8D-8D to 1S-1S-1S. Not the other way around.

4.6.2.2 Configuration Corruption Detection Related Registers

Table 27. Configuration Corruption Detection Related Registers and Transactions

Related Registers	Related SPI Transactions (see Table 75 on page 85)	Related Octal Transactions (see Table 76 on page 88)
Status Register 1 Volatile (STR1V) (see Table 41 on page 65)	All 1S-1S-1S Transactions	N/A

Notes
19. If you have Vcc within specifications and a hardware reset does not resolve the issue, replace the flash device.
20. As soon as first Write Any Register transaction updates the Nonvolatile Status Register or Configuration Register, all remaining nonvolatile status and configuration registers go back to the predefined state (STR1N = 0x00, CFR1N = 0x00, CFR2N = 0x00, CFR3N = 0x00, CFR4N = 0x00, CFR5N = 0x40). It is recommended to initiate SafeBoot recovery operation by configuring the Address byte length and latency followed by rest configurations.

4.7 AutoBoot

AutoBoot allows the host to read data from HL-T/HS-T family of devices after power up or after a hardware reset without having to send any read transactions (including the address). Based on the device configuration, data is output on the interface I/Os once CS# is brought LOW and CK is toggled.

The starting address for the read data is specified in the AutoBoot Register (ATBN[31:9] - STADR[22:0]). This starting address can be at any page boundary location in the memory (512 byte page boundary). Also identified in the AutoBoot Register is a starting delay which is represented as the number of clock cycles (ATBN[8:1] - STDLY[7:0]). This delay is instituted before the data is read out. The delay can be programmed to meet the host's requirements but a minimum amount is required to meet the memory access times based on the frequency for operation. It is highly recommended to check the Status Register 1 value after successful or unsuccessful AutoBoot execution to verify the configuration corruption (SafeBoot).

Note Wrap function must be disabled for AutoBoot.

Note AutoBoot is disabled when the Read Password feature is enabled, as part of the Advanced Sector Protection. It is recommended to disable AutoBoot (ATBN[0] - ATBTEN) when Read Password feature is enabled.

Note Autoboot with Interface CRC enabled requires reading out at least 4 words of data.

Note It is highly recommended to assign first AutoBoot address in the Long Retention region.

4.7.1 AutoBoot Related Registers and Transactions

Table 28. AutoBoot Related Registers and Transactions

Related Registers	Related SPI Transactions (see Table 75 on page 85)	Related Octal Transactions (see Table 76 on page 88)
AutoBoot Register (ATBN) (see Table 66 on page 79)	Read Any Register (RDARG_C_0)	Read Any Register (RDARG_4_0)
	Write Any Register (WRARG_C_1)	Write Any Register (WRARG_4_1)
	AutoBoot Transaction (see Figure 14 on page 12)	AutoBoot Octal SDR Transaction (see Figure 27 on page 15) / AutoBoot Octal DDR Transaction (see Figure 28 on page 15))

4.8 Read Transactions

HL-T/HS-T supports different read transactions to access different memory maps, namely: Read Memory array, Read Device Identification, Read Register, Read Secure Silicon, Read Protection DYB and PPB bits.

These read transactions can use any of these three interfaces and protocols:

- SPI interface with SDR (1S-1S-1S) protocol, transfers the one byte command one bit per CK rising edge
- Octal interface with SDR (8S-8S-8S) protocol, transfers the two byte command eight bits per CK rising edge
- Octal interface with DDR (8D-8D-8D) protocol, transfers the two byte command eight bits per CK rising and falling edge

These read transactions use the following features:

- The read transactions require latency cycles following the address to allow time to access the memory array (except RDAY1_4_0 and RDAY1_C_0 of 1S-1S-1S protocol) (see Table 49 on page 70).
- Data Strobe (DS) output enables the memory controller to capture data at the center of the data eye (see Section 4.8.4 Data Strobe (DS) on page 49).
- The read transaction has the option of wrapped read length and alignment groups of 8-, 16-, 32-, or 64-bytes (see Table 52 on page 72 and Table 53 on page 73).

4.8.1 Read Identification Transactions

There are three unique identification transactions, and each support all three Protocols (1S-1S-1S), (8S-8S-8S), and (8D-8D-8D) (see Section 6. Transaction Table on page 85).

4.8.1.1 Read Device Identification Transaction

The Read Device Identification (RDIDN_0_0, RDIDN_4_0) transaction provides read access to manufacturer identification and device identification. The SPI mode has no address cycles, whereas the Octal mode has four dummy addresses (00h). The transaction uses latency cycles set by (CFR3V[1:0]) to enable maximum clock frequency of 166 MHz under SPI mode, 166 MHz under HL-T Octal, and 200 MHz under HS-T Octal mode (see Table 49). The Octal mode supports the DS for capture of data (see Section 6. Transaction Table).

4.8.1.2 Read SFDP Transaction

The Read Serial Flash Discoverable Parameters (RSFDP_3_0, RSFDP_4_0) transaction provides access to the JEDEC Serial Flash Discovery Parameters (SFDP) (see Section 6. Transaction Table on page 85). The transaction uses a 3-byte address in SPI mode and 4-byte address in Octal mode address. If a non-zero address is set, the selected location in the SFDP space is the starting point of the data read. This enables random access to any parameter in the SFDP space. Continuous (sequential) read is supported with this transaction. Eight latency cycles are required. Read SFDP Transaction is not supported in Read Password mode before the password is provided. The maximum clock frequency for the Read SFDP transaction is 156 MHz under SPI mode, 92 MHz under Octal SDR mode, and 85 MHz under Octal DDR mode.

4.8.1.3 Read Unique Identification Transaction

Read Unique Identification (RDUID_0_0, RDUID_4_0) transaction is similar to Read Device Identification transaction, but accesses a different 64-bit number, which is unique to each device. It is factory programmed.

4.8.1.4 Read Identification Related Register and Transaction

Table 29. Read Identification Related Registers and Transactions

Related Registers	Related SPI Transactions (see Table 75 on page 85)	Related Octal Transactions (see Table 76 on page 88)
Configuration Register 3 (CFR3N, CFR3V) (see Table 50 on page 71)	Read Identification (RDIDN_0_0)	Read Identification (RDIDN_4_0)
Configuration Register 5 (CFR5N, CFR5V) (see Table 54 on page 74)	Read Serial Flash Discoverable (RSFDP_3_0)	Read Serial Flash Discoverable (RSFDP_4_0)
	Read Unique Identification (RDUID_0_1)	Read Unique Identification (RDUID_4_1)

4.8.2 Read Memory Array Transactions

Memory array data can be read from the memory starting at any byte boundary. Data bytes are sequentially read from incrementally higher byte addresses until the host ends the data transfer by driving CS# input HIGH. If the byte address reaches the maximum address of the memory array, the read will continue at address zero of the array.

4.8.2.1 SPI Read and Read Fast Transactions

The SPI Read and Read Fast transactions (1S-1S-1S) are supported for Host systems that require backward compatibility to legacy SPI. This protocol does not support the DS for capture of data. The option of wrapped read length is available. The Read transaction is for maximum clock frequency of 50 MHz and requires no latency cycles. The Read Fast Transaction uses latency cycles set by (CFR2V[3:0]) to enable maximum clock frequency of 166 MHz (see Section 6. Transaction Table).

4.8.2.2 Read Octal SDR Transaction

The Read Octal SDR transaction provides high data throughput using SDR (8S-8S-8S) protocol. This protocol supports the DS for capture of data. The option of wrapped read length is available. This transaction uses latency cycles set by (CFR2V[3:0]) to enable maximum 166 or 200 MHz clock frequency (see Section 6. Transaction Table).

4.8.2.3 Read Octal DDR Transaction

The Read Octal DDR transaction provides the fastest data throughput using DDR (8D-8D-8D) protocol. This protocol only supports the DS for capture of data. The option of wrapped read length is available. This transaction uses latency cycles set by (CFR2V[3:0]) to enable maximum 166 or 200 MHz clock frequency (see Section 6. Transaction Table).

4.8.2.4 Read Memory Array Related Registers and Transactions

Table 30. Read Memory Array Related Registers and Transactions

Related Registers	Related SPI Transactions (see Table 75 on page 85)	Related Octal Transactions (see Table 76 on page 88)
Configuration Register 2 (CFR2N, CFR2V) (see Table 48 on page 69)	Read (RDAY1_4_0, RDAY1_C_0)	Read Octal SDR (RDAY1_4_0)
Configuration Register 4 (CFR4N, CFR4V) (see Table 52 on page 72)	Read Fast (RDAY2_C_0)	Read Octal DDR (RDAY2_4_0)
Configuration Register 5 (CFR5N, CFR5V) (see Table 54 on page 74)	_	_

4.8.3 Read Registers Transactions

There are multiple registers for reporting embedded operation status or controlling device configuration options. Registers contain both volatile and nonvolatile bits. There are two ways to read the Registers. The Read Any Register transaction provides a way to read all device registers: nonvolatile and volatile by address selection. There are also dedicated Register Read transactions, which are defined per register and only read the contents of that register. These Read Register Transactions support all three Protocols (1S-1S-1S), (8S-8S-8S) and (8D-8D-8D) (see Section 6. Transaction Table on page 85).

4.8.3.1 Read Any Register

The Read Any Register transaction is the best way to read all device registers, both nonvolatile and volatile. The transaction includes the address of the register to be read (see Section 6. Transaction Table). This is followed by a number of latency cycles set by (CFR2V[3:0]) for reading nonvolatile registers and CFR3V[7:6] for reading volatile registers. See Table 49 on page 70 for NV Registers latency cycles and Table 51 on page 72 for Volatile Registers latency cycles. Then, the selected register contents are returned. In SPI mode, if the read access is continued, the same addressed register contents are returned until the transaction is terminated; only one byte register location is read by each Read Any Register transaction. For registers with more that one byte of data, the Read Any Register transaction must again be used to read each byte of data. The Octal mode supports the DS for capture of data (see Section 6. Transaction Table).

The maximum clock frequency for the Read Any Register transaction is 166 MHz under SPI mode, 166 MHz under HL-T Octal mode, and 200 MHz under HS-T Octal mode.

The Read Any Register transaction can be used during embedded operations to read Status Register 1 (STR1V). It is not used for reading registers such as ASP PPB Access Register (PPAV) and ASP Dynamic Block Access Register (DYAV). There are separate commands required to select and read the location in the array accessed. The Read Any Register transaction will read invalid data from the PASS Register locations if the ASP Password protection mode is selected by programming ASPR[2:0]. Reading undefined locations provides undefined data.

4.8.3.2 Read Status Registers Transaction

The Read Status Register (RDSR1_0_0/RDSR1_4_0, RDSR2_0_0/RDSR2_4_0) transactions allow the registers' volatile contents be read. The SPI mode has no address cycles whereas the Octal mode has four dummy address of "00h". The transaction uses latency cycles set by (CFR3V[7:6]) for reading volatile registers to enable maximum clock frequency of 166 MHz under SPI mode, 166 MHz under HL-T Octal mode, and 200 MHz under HS-T Octal mode (see Table 49). The Octal mode supports the DS for capture of data (see Section 6. Transaction Table).

The volatile version of Status Registers contents can be read at any time, even while a program, erase, or write operation is in progress.

It is possible to read Status Register 1 continuously by providing multiples of eight clock cycles. The status is updated for each eight cycle read. This is limited to only under SPI mode.

4.8.3.3 Read Dynamic Protection Bit (DYB) Access Register Transaction

The Read DYB Access Register (RDDYB_4_0) transaction reads the contents of the DYB Access Register. The transaction uses latency cycles set by (CFR3V[7:6]) for reading volatile registers to enable maximum clock frequency of 166 MHz under SPI mode, 166 MHz under HL-T Octal mode, and 200 MHz under HS-T Octal mode (see Table 49). The Octal mode supports the DS for capture of data (see Section 6. Transaction Table). It is possible to read DYB Access register continuously, however the address of the DYB register does not increment, so the entire DYB array cannot be read in this fashion. Each location must be read with a separate Read DYB transaction.

4.8.3.4 Read Persistent Protection Bit (PPB) Access Register Transaction

The Read PPB Access Register (RDPBB_4_0) transaction reads the contents of the PPB Access Register. The transaction uses latency cycles set by (CFR2V[3:0]) to enable maximum clock frequency of 166 MHz under SPI mode, 166 MHz under HL-T Octal mode, and 200 MHz under HS-T Octal mode (see Table 49). The Octal mode supports the DS for capture of data (see Section 6. Transaction Table on page 85). It is possible to read PPB Access Register continuously, however the address of the PPB register does not increment, so the entire PPB array cannot be read in this fashion. Each location must be read with a separate Read PPB transaction.

4.8.3.5 Read PPB Lock Registers Transaction

The Read PPB Lock Register (RDPLB_0_0, RDPLB_4_0) transactions allow the content of the nonvolatile registers to be read. The SPI mode has no address cycles, whereas the Octal mode has four required address bytes of “00h”. The transaction uses latency cycles set by (CFR3V[7:6]) for reading volatile registers to enable maximum clock frequency of 166 MHz under SPI mode, 166 MHz under HL-T Octal mode, and 200 MHz under HS-T Octal mode. The Octal mode supports the DS for capture of data (see Section 6. Transaction Table). It is possible to read PPB Lock Bit continuously.

4.8.3.6 Read ECC Data Unit Status

The Read ECC Data Unit Status (RDECC_4_0) transaction is used to determine the ECC status of the addressed unit data. In this transaction, the LSb of the address must be aligned to an ECC data unit. This transaction uses latency cycles set by (CFR3V[7:6]) for reading volatile registers to enable maximum clock frequency of 166 MHz under SPI mode, 166 MHz under HL-T Octal mode, and 200 MHz under HS-T Octal mode. The Octal mode supports the DS for capture of data (see Section 6. Transaction Table on page 85).

The byte contents of the ECC Status for the selected ECC unit is then output. Any following data will be indeterminate. To read the next ECC unit status, another RDECC_4_0 transaction should be sent out to the next address, incremented by 16 [Data Unit size/8] bytes.

4.8.3.7 Read Register Related Registers and Transactions

Table 31. Read Register Related Registers and Transactions

Related Registers	Related SPI Transactions (see Table 75 on page 85)	Related Octal Transactions (see Table 76 on page 88)
Configuration Register 2 (CFR2N, CFR2V) (see Table 48 on page 69)	Read Any Register (RDARG_C_0)	Read Any Register (RDARG_4_0)
Configuration Register 3 (CFR3N, CFR3V) (see Table 50 on page 71)		
Configuration Register 5 (CFR5N, CFR5V) (see Table 54 on page 74)	Read Status Register 1 (RDSR1_0_0)	Read Status Register 1 (RDSR1_4_0)
	Read Status Register 2 (RDSR2_0_0)	Read Status Register 2 (RDSR2_4_0)
	Read DYB (RDDYB_4_0)	Read DYB (RDDYB_4_0)
	Read PPB (RDPPB_4_0)	Read PPB (RDPPB_4_0)
	Read PPB Lock (RDPLB_0_0)	Read PPB Lock (RDPLB_4_0)
	Read ECC Status (RDECC_4_0)	Read ECC Status (RDECC_4_0)

4.8.4 Data Strobe (DS)

A data strobe (DS) is transmitted externally, along with data, for use in data capture at the host. During the period of data transfer in read transactions, the DS signal is driven by the device and transitions with the DQ signal data transitions. DS is used as an additional output signal with the same timing characteristics as other data outputs but with the guarantee of transitioning with every data bit transferred. DS is edge-aligned with data for DDR READs and is center-aligned with data for SDR READs. A pre-drive on DS exists to ensure DS is driven LOW immediately after 2.5 clock cycle after last address byte input to the device.

4.9 Write Transactions

There are write transactions for writing to the Registers. These write transactions can use any of following three protocols:

- SPI interface with SDR (1S-1S-1S) protocol, transfers the one byte command one bit per CK rising edge
- Octal interface with SDR (8S-8S-8S) protocol, transfers the two byte command eight bits per CK rising edge
- Octal interface with DDR (8D-8D-8D) protocol, transfers the two byte command eight bits per CK rising and falling edge

4.9.1 Write Enable Transaction

The Write Enable (WRENB_0_0) transaction sets the Write Program Enable Status (WRPGEN) bit of the Status Register 1 (STR1V[1]) to 1. The WRPGEN bit must be set to 1 by issuing the Write Enable (WRENB_0_0) Transaction to enable write, program, and erase transactions (see Section 6. Transaction Table on page 85).

4.9.2 Write Disable Transaction

The Write Disable (WRDIS_0_0) transaction clears the Write Program Enable Status (WRPGEN) bit of the Status Register 1 (STR1V[1]) to 0.

The WRPGEN bit can be cleared to 0 by issuing the Write Disable (WRDIS_0_0) transaction to disable commands that requires WRPGEN be set to 1 for execution. The WRDIS_0_0 transaction can be used by the user to protect memory areas against inadvertent write, program, or erase operations that can corrupt the contents of the memory. The WRDIS_0_0 transaction is ignored during an embedded operation while RDYBSY bit = 1 (STR1V[0]) (see Section 6. Transaction Table).

4.9.3 Clear Program and Erase Failure Flags Transaction

The Clear Program and Erase Failure Flags (CLPEF_0_0) transaction resets bit STR1V[5] (Erase Error Flag) and bit STR1V[6] (Program Error Flag) to 0. This transaction will be accepted even when the device remains busy with RDYBSY set to 1, as the device does remain busy when either error bit is set. The WRPGEN bit will be unchanged after this command is executed (see Section 6. Transaction Table).

4.9.4 Clear ECC Status Register Transaction

The Clear ECC Status Register (CLECC_0_0) transaction resets bit ECSV[4] (2-bit ECC Detection), bit ECSV[3] (1-bit ECC Correction), INSV[1:0] ECC detection status bits, Address Trap Register EATV[31:0], and ECC Detection Counter ECTV[15:0]. It is not necessary to set the WRPGEN bit before this transaction is executed. The Clear ECC Status Register transaction will be accepted even when the device remains busy with WRPGEN set to 1, as the device does remain busy when either error bit is set. The WRPGEN bit will be unchanged after this command is executed (see Section 6. Transaction Table).

4.9.5 Write Any Register Transaction

The Write Any Register (WRARG_C_1 / WRARG_4_1) transaction provides a way to write any device register, nonvolatile or volatile. The transaction includes the address of the register to be written, followed by one byte of data to write in the addressed register (see Section 6. Transaction Table).

Before the WRARG_C_1 / WRARG_4_1 transaction can be accepted by the device, a Write Enable (WRENB_0_0) transaction must be issued and decoded, which sets the Write/Program Enable bit (WRPGEN) in the Status Register to enable any write operations. The RDYDSY bit in STR1V[0] can be checked to determine when the operation is completed. The PRGERR and ERSERR bits in STR1V[6:5] can be checked to determine if any error occurred during the operation.

Some registers have a mixture of bit types and individual rules controlling which bits can be modified. Some bits are read only, some are OTP, and some are designated Reserved (DNU).

Read only bits are never modified and the related bits in the WRARG_C_1 / WRARG_4_1 transaction data byte are ignored without setting a program or erase error indication (PRGERR or ERSERR in STR1V[6:5]). Hence, the value of these bits in the WRARG_C_1 / WRARG_4_1 data byte do not matter.

OTP bits can only be programmed to the level opposite of their default state. Writing of OTP bits back to their default state is ignored and no error is set.

Nonvolatile bits which are changed by the WRARG_C_1 / WRARG_4_1 data require nonvolatile register write time (t_W) to be updated. The update process involves an erase and a program operation on the nonvolatile register bits. If either the erase or program portion of the update fails, the related error bit and RDYBSY bit in STR1V will be set to 1.

Status Register 1 can be repeatedly read (polled) to monitor the RDYBSY bit (STR1V[0]) and the error bits (STR1V[6,5]) to determine when the register write is completed or failed. If there is a write failure, the CLPEF_0_0 transaction is used to clear the error status and enable the device to return to standby state.

The ASP PPB Lock Register (PPLV) register cannot be written by the WRARG_C_1 / WRARG_4_1 transaction. Only the Write PPB Lock Bit (WRPLB_0_0) transaction can write the PPLV Register.

The Data Integrity Check Register cannot be written by the WRARG_C_1 / WRARG_4_1 transaction. The Data Integrity Check Register is loaded by running the Data Integrity Check transaction (DICHK_4_1).

4.9.6 Write PPB Lock Bit

The Write PPB Lock Bit (WRPLB_0_0) transaction clears the PPB Lock Register PPLV[0] to zero. The PPBLCK bit is used to protect the PPB bits. When PPLV[0] = 0, the PPB Program/Erase transaction will be aborted. In Read Password Protection mode, PPBLCK bit is also used to control the high order bits of the address by forcing the address range to be limited to one sector where boot code is stored, until the read password is supplied (see Section 6. Transaction Table on page 85).

Before the WRPLB_0_0 transaction can be accepted by the device, a Write Enable (WRENB_0_0) transaction must be issued and decoded by the device, which sets the Write/Program Enable (WRPGEN) in the Status Register 1 to enable any write operations.

While the operation is in progress, the Status Register can still be read to check the value of the RDYBSY bit. The WRPGEN bit is a 1 during the self-timed operation, and is a 0 when it is completed. When the Write PPB Lock transaction is completed, the RDYBSY bit is set to a 0 (see Section 6. Transaction Table).

4.9.7 Write Transactions Related Registers and Transactions

Table 32. Write Transactions Related Registers and Transactions

Related Registers	Related SPI Transactions (see Table 75 on page 85)	Related Octal Transactions (see Table 76 on page 88)
Status Register 1 (STR1N, STR1V) (see Table 41 on page 65)	Write Enable (WRENB_0_0)	Write Enable (WRENB_0_0)
Configuration Register 5 (CFR5N, CRF5V) (see Table 54 on page 74)	Write Disable (WRDIS_0_0)	Write Disable (WRDIS_0_0)
ECC Status Register (ECSV) (see Table 58 on page 75)	Clear Program and Erase Failure Flags (CLPEF_0_0)	Clear Program and Erase Failure Flags (CLPEF_0_0)
Interrupt Configuration (INCV) (see Table 68 on page 80)	Clear ECC Status Register (CLECC_0_0)	Clear ECC Status Register (CLECC_0_0)
Address Trap Register (EATV) (see Table 59 on page 76)	Write Any Register (WRARG_C_1)	Write Any Register (WRARG_4_1)
ECC Detection Counter (ECTV) (see Table 60 on page 76)	Write PPB Lock Bit (WRPLB_0_0)	Write PPB Lock Bit (WRPLB_0_0)

4.10 Program

There are program transactions for programming data to the Memory Array, Secure Silicon Region and Persistent Protection Bits.

These program transactions can use any of these three protocols:

- SPI interface with SDR (1S-1S-1S) protocol, transfers the one byte command one bit per CK rising edge
- Octal interface with SDR (8S-8S-8S) protocol, transfers the two byte command eight bits per CK rising edge
- Octal interface with DDR (8D-8D-8D) protocol, transfers the two byte command eight bits per CK rising and falling edge

Before any program transaction can be accepted by the device, a Write Enable (WRENB_0_0) transaction must be issued and decoded by the device. Program transactions can only be executed by the device if the Write/Program Enable (WRPGEN) in the Status Register is set to ‘1’ to enable program operations. When a program transaction is completed, the WRPGEN bit is reset to a ‘0’.

While the program transaction is in progress, the Status Register 1 may be read to check the value of the Device Ready/Busy (RDYBSY) bit. The RDYBSY bit is a ‘1’ during the self-timed program transaction, and is a ‘0’ when it is completed.

The PGMERR bit in STR1V[6] may be checked to determine if any error occurred during the program transaction.

A program transaction applied to a sector that has been Write Protected through any of the protection schemes will not be executed and will set the PGMERR status fail bit.

The program transactions will be initiated when CS# is driven into the logic HIGH state.

4.10.1 Program Granularity

The HL-T/HS-T family supports multi-pass programming (bit walking) where programming a “0” over a “1” without performing the sector erase operation. Bit-walking is allowed for the non-AEC-Q100 industrial temperature range (–40°C to +85°C) of this device. It is required to perform only one programming operation (single-pass programming) on each ECC data unit between erase operations for the higher temperature range (–40°C to +105°C) and (–40°C to +125°C) devices and all AEC-Q100 devices.

Multi-pass programming without an erase operation will disable the device’s ECC functionality for that data unit. Note that if 2-bit ECC is enabled, multi-pass Programming within the same sector will result in a Program Error.

4.10.2 Page Programming

Page Programming is done by loading a Page Buffer with data to be programmed and issuing a programming command to move data from the buffer to the memory array. This sets an upper limit on the amount of data that can be programmed with a single programming transaction. Page Programming allows up to a page size (either 256- or 512-bytes) to be programmed in one operation. The page size is determined by the Configuration Register 3 bit CFR3V[4]. The page is aligned on the page size address boundary. It is possible to program from one bit up to a page size in each Page Programming operation. It is recommended that a multiple of 16-byte length and aligned Program Blocks be written. This ensures that ECC is not disabled. For the very best Page Program throughput, programming should be done in full pages of 512 bytes aligned on 512-byte boundaries with each Page being programmed only once.

4.10.3 Program Page Transaction

The Program Page transaction (PRPGE_4_1) programs data into the memory array. If data more than a page size (256B or 512B) is sent to the device, then the space between the starting address and the page aligned end boundary, the data loading sequence will wrap from the last byte in the page to the zero byte location of the same page and begin overwriting any data previously loaded in the page. If less than a page of data is sent to the device, then the sent data bytes will be programmed in sequence, starting at the provided address within the page, without having any effect on the other bytes of the same page. The programming process is managed by the device internal control logic. The PRGERR bit indicates if an error has occurred in the programming transaction that prevents successful completion of programming. This includes attempted programming of a protected area (see Section 6. Transaction Table on page 85).

Under Octal SDR mode, this transaction can be used for single byte command and its address can start at an even or odd address. Under DDR mode, this command can only be used for programming multiples of 2-bytes and the address must start at an even address.

4.10.4 Program Secure Silicon Region Transaction

The Program Secure Silicon transaction (PRSSR_4_1) programs data in the SSR, which is in a different address space from the main array data and is OTP. The SSR is 1024 bytes, so the address bits from A31 to A10 must be zero for this transaction (see Section 6. Transaction Table). It is required to align start address to 32 bits while programming the SSR space, which means the address bits A1 and A0 should be 0'b and host should deassert CS# to align with 32 bits.

The PRGERR bit in STR1V[6] may be checked to determine if any error occurred during the operation.

To program the OTP array in bit granularity, the rest of the bits within a data byte can be set to 1.

Each SSR memory space can be programmed one or more times, provided that the region is not locked. Attempting to program zeros in a region that is locked will fail with the PRGERR bit in STR1V[6] set to 1. Programming once, even in a protected area does not cause an error and does not set PRGERR bit. Subsequent programming can be performed only on the unprogrammed bits (that is, 1 data). Programming more than once within an ECC unit will disable ECC on that data unit.

4.10.5 Program Persistent Protection Bit (PPB)

The Program Persistent Protect Bit (PRPPB_4_0) transaction programs a bit in the PPB Register to protect the sector of the provided address from being programed or erased (see Section 6. Transaction Table).

The PRGERR bit in STR1V[6] may be checked to determine if any error occurred during the operation. Program PPB bit transaction will abort when trying to program the PPB bits protected by ASPPPB (ASPO[3]), ASPPRM (ASPO[0]) and PPBLCK (PPLV[0]) bit.

4.10.6 Program Related Registers and Transactions

Table 33. Program Related Registers and Transactions

Related Registers	Related SPI Transactions (see Table 75 on page 85)	Related Octal Transactions (see Table 76 on page 88)
Status Register 1 (STR1N, STR1V) (see Table 41 on page 65)	Write Enable (WRENB_0_0)	Write Enable (WRENB_0_0)
Configuration Register 5 (CFR5N, CRF5V) (see Table 54 on page 74)	Program Page (PRPGE_4_1)	Program Page (PRPGE_4_1)
Advance Sector Protect Register (ASPO) (see Table 61 on page 77)	Program Secure Silicon (PRSSR_4_1)	Program Secure Silicon (PRSSR_4_1)
ASP PPB Lock (PPLV) (see Table 63 on page 78)	Program Persistent Protection Bit (PRPPB_4_0)	Program Persistent Protection Bit (PRPPB_4_0)
ECC Status Register (ECSV) (see Table 58 on page 75)	Clear Program and Erase Failure Flags (CLPEF_0_0)	Clear Program and Erase Failure Flags (CLPEF_0_0)

4.11 Erase

There are erase transactions for erasing data bits to 1 (all bytes are FFh) for the Memory Array and Persistent Protection Bits.

These erase transactions can use any of these three protocols:

- SPI interface with SDR (1S-1S-1S) protocol, transfers the one byte command one bit per CK rising edge
- Octal interface with SDR (8S-8S-8S) protocol, transfers the two byte command eight bits per CK rising edge
- Octal interface with DDR (8D-8D-8D) protocol, transfers the two byte command eight bits per CK rising and falling edge

Before any erase transaction can be accepted by the device, a Write Enable (WRENB_0_0) transaction must be issued and decoded by the device. Erase transactions can only be executed by the device if the Write/Program Enable bit (WRPGEN) in the Status Register is set to ‘1’ to enable erase operations. When an erase transaction is completed, the WRPGEN bit is reset to a ‘0’.

While the erase transaction is in progress, the Status Register 1 may be read to check the value of the Device Ready/Busy (RDYBSY) bit. The RDYBSY bit is a ‘1’ during the self-timed erase transaction, and is a ‘0’ when it is completed.

The ERSERR bit in STR1V[5] can be checked to determine if any error occurred during the erase transaction.

An erase transaction applied to a sector that has been Write Protected through the Block Protection bits or ASP, will not be executed and will set the ERSERR status fail bit.

Erase transactions will be initiated when CS# is driven into the logic HIGH state.

4.11.1 Erase 4 KB Sector Transaction

The Erase 4 KB Sector (ER004_4_0) transaction sets all the bits of a 4 KB sector to 1 (all bytes are FFh) (see Section 6. Transaction Table on page 85).

This transaction is ignored when the device is configured for uniform sectors only (CFR3V[3] = 1). If the Erase 4 KB sector transaction is issued to a non-4 KB sector address, the device will abort the operation and will not set the ERSERR status fail bit.

4.11.2 Erase 256 KB Sector Transaction

The Erase 256 KB Sector (ER256_4_0) transaction sets all bits in the addressed sector to 1 (all bytes are FFh) (see Section 6. Transaction Table).

A device configuration option (CFR3V[3]) determines if the Hybrid Sector Architecture is in use. When CFR3V[3] = 0, 4 KB sectors overlay a portion of the highest or lowest address 128 KB or 64 KB of the device address space. If a sector erase command is applied to a 256 KB sector that is overlaid by 4 KB sectors, the overlaid 4 KB sectors are not affected by the erase. Only the visible (non-overlaid) portion of the 128 KB or 192 KB sector is erased. When CFR3V[3] = 1, there are no 4 KB sectors in the device address space and the Sector Erase command always operates on fully visible 256 KB sectors.

When BLKCHK is enabled an erase transaction first evaluates the erase status of the sector. If the sector is found to erased, the erase operation is aborted. The erase operation is only executed if programmed bits are found in the sector. Disabling BLKCHK executes an erase operation unconditionally.

4.11.3 Erase Chip Transaction

The Erase Chip (ERCHP_0_0) transaction sets all bits to 1 (all bytes are FFh) inside the entire flash memory array (see Section 6. Transaction Table on page 85).

An Erase Chip transaction can be executed only when the Block Protection (BP2, BP1, BP0) bits are set to 0's. If the BP bits are not zero, the transaction is not executed and ERSERR status fail bit is not set. The transaction will skip any sectors protected by the Advance Sector Protection DYB or PPB and the ERSERR status fail bit will not be set.

4.11.4 Erase Persistent Protection Bit (PPB) Transaction

The Erase PPB (ERPPB_0_0) transaction sets all PPB bits to 1 (see Section 6. Transaction Table). This transaction will abort if PPB bits are protected by ASPPPB (ASPO[3]), ASPPRM (ASPO[0]) and PPBLCK (PPLV[0]) bit.

4.11.5 Erase Status and Count

4.11.5.1 Evaluate Erase Status Transaction

The Evaluate Erase Status (EVERS_4_0) transaction verifies that the last erase operation on the addressed sector was completed successfully. If the selected sector was successfully erased, then the erase status bit (STR2V[2]) is set to 1. If the selected sector was not completely erased STR2V[2] is 0. The Write/Program Enable transaction (to set the WRPGEN bit) is not required before this transaction. However, the RDYBSY bit is set by the device itself and cleared at the end of the operation, as visible in STR1V[0] when reading status (see Section 6. Transaction Table).

The Evaluate Erase Status transaction can be used to detect when erase operations that have failed due to loss of power, reset, or failure during the erase operation. The transaction requires t_{EES} to complete and update the erase status in STR2V. The RDYBSY bit (STR1V[0]) can be read to determine when the Evaluate Erase Status transaction is completed. If a sector is found not erased with STR2V[2] = 0, the sector must be erased again to ensure reliable storage of data in the sector.

4.11.5.2 Sector Erase Count Transaction

The Sector Erase Count (SEERC_4_0) transaction outputs the number of erase cycles for the addressed sector. The erase cycle count is stored in the Sector Erase Count (SECV[22:0]) Register, and can be read by using the Read Any Register transaction. The RDYBSY bit is set by the device itself and cleared at the end of the operation, as visible in STR1V[0] when reading status (see Section 6. Transaction Table).

The transaction requires t_{SEC} to complete and update the SECV[22:0] Register. The RDYBSY bit (STR1V[0]) may be read to determine when the Sector Erase Count Transaction finished. The SECV[23] bit is used to determine if the reported sector erase count is corrupted and was reset.

4.11.6 Erase Related Registers and Transaction

Table 34. Erase Related Registers and Transactions

Related Registers	Related SPI Transactions (see Table 75 on page 85)	Related Octal Transactions (see Table 76 on page 88)
Status Register 1 (STR1N, STR1V) (see Table 41 on page 65)	Write Enable (WRENB_0_0)	Write Enable (WRENB_0_0)
Status Register 2 (STR2V) (see Table 44 on page 67)	Erase 4 KB Sector (ER004_4_0)	Erase 4 KB Sector (ER004_4_0)
Configuration Register 5 (CFR5N, CFR5V) (see Table 54 on page 74)	Erase 256 KB Sector (ER256_4_0)	Erase 256 KB Sector (ER256_4_0)
ASP PPB Lock (PPLV) (see Table 63 on page 78)	Erase Chip (ERCHP_0_0)	Erase Chip (ERCHP_0_0)
ECC Status Register (ECSV) (see Table 58 on page 75)	Evaluate Erase Status (EVERS_4_0)	Evaluate Erase Status (EVERS_4_0)
Sector Erase Count Register (SECV) (see Table 67 on page 80)	Sector Erase Count (SEERC_4_0)	Sector Erase Count (SEERC_4_0)
	Erase Persistent Protection Bit (PPB) Transaction (ERPPB_0_0)	Erase Persistent Protection Bit (PPB) Transaction (ERPPB_0_0)

4.12 Suspend and Resume Embedded Operation

HL-T/HS-T device can interrupt and suspend the running embedded operations such as Erase, Program or Data Integrity Check. It can also resume the suspended operation once the host finishes the intermediate operation and sends the respective resume transaction to the device.

4.12.1 Erase, Program or Data Integrity Check Suspend

The Suspend transaction allows the system to interrupt a program, erase, or data integrity check operation and then read from any other non erase-suspended sector, non-program-suspended-page, or the array. The Device Ready/Busy Status Flag (RDYBSY) in Status Register 1 (STR1V[0]) must be checked to know when the program, erase, or data integrity check operation has stopped.

4.12.1.1 Program Suspend

- Program Suspend is valid only during a programming operation.
- The Program Operation Suspend Status flag (PROGMS) in Status Register-2 (STR2V[0]) can be used to determine if a programming operation has been suspended or was completed at the time RDYBSY changes to 0.
- A program operation can be suspended to allow a read operation.
- Reading at any address within a program-suspended page produces undetermined data.

4.12.1.2 Erase Suspend

- Erase Suspend is valid only during a sector erase operation.
- The Erase operation Suspend status flag (ERASES) in Status Register-2 (STR2V[1]) can be used to determine if an erase operation has been suspended or was completed at the time RDYBSY changes to 0.
- A Chip Erase operation cannot be suspended.
- An Erase operation can be suspended to allow a program operation or a read operation.
- During an erase suspend, the DYB array can be read to examine sector protection.
- A new erase operation is not allowed with an already suspended erase, program, or data integrity check operation. An erase command is ignored in this situation.
- Reading at any address within an erase-suspended sector produces undetermined data.

4.12.1.3 Data Integrity Check Suspend

- Data Integrity Check Suspend is valid only during a Data Integrity Check Calculation operation.
- The Memory Array Data Integrity CRC Suspend Status Flag (DICRCS) in Status Register-2 (STR2V[4]) can be used to determine if a data integrity check operation has been suspended or was completed at the time RDYBSY changes to 0.
- A data integrity check operation can be suspended to allow a read operation.

The Write Any Register or Erase Persistent Protection Bit transactions are not allowed during Erase, Program or Data Integrity Check Suspend. It is therefore, not possible to alter the Block Protection or PPB bits during Erase Suspend. If there are sectors that may need programming during Erase suspend, these sectors should be protected only by DYB bits that can be turned OFF during Erase Suspend.

The time required for the suspend operation to complete is t_{PEDS}.

After an erase-suspended program operation is complete, the device returns to the erase-suspend mode. The system can determine the status of the program operation by reading the RDYBSY bit in the Status Register 1, just as in the standard program operation.

Table 35 lists the transactions allowed during the suspend operation.

Table 35. Transactions Allowed During Suspend

Transaction Name	Allowed During Erase Suspend	Allowed During Program Suspend	Allowed During Data Integrity Check Suspend
Write Disable (WRDIS_0_0)	Yes	No	No
Read Status Register 1 (RDSR1_0_0, RDSR1_4_0)		Yes	Yes
Write Enable (WRENB_0_0)		No	No
Read Status Register 2 (RDSR2_0_0, RDSR2_4_0)		Yes	Yes
Program Page (PRPGE_4_1)		No	No
Read ECC Status (RDECC_4_0)		Yes	Yes
Clear ECC Status Register (CLECC_0_0)		Yes	
Read PPB Lock Bit (RDPLB_0_0, RDPLB_4_0)			
Resume Program / Erase / Data Integrity Check (RSEPD_0_0)			
Program SSR (PRSSR_4_1)		No	No
Read SSR (RDSSR_4_0)		Yes	Yes
Read Unique ID (RDUID_0_0, RDUID_4_0)			
Read SFDP (RSFDP_3_0, RSFDP_4_0)			
Read Interface CRC Register (RDCRC_4_0)			
Read Any Register (RDARG_C_0, RDARG_4_0)			
Software Reset Enable (SRSTE_0_0)			
Clear Program and Erase Failure Flags (CLPEF_0_0)			
Software Reset (SFRST_0_0)			
Read Identification Register (RDIDIN_0_0, RDIDIN_4_0) (manufacturer and device identification)			
Suspend Program / Erase / Data Integrity Check (SPEPD_0_0)		No	No
Read DYB (RDDYB_4_0)		Yes	Yes
Read PPB (RDPPB_4_0)			
Read Octal SDR (RDAY1_4_0)			
Read Octal DDR (RDAY2_4_0)			

4.12.2 Erase, Program or Data Integrity Check Resume

An Erase, Program or Data Integrity Check Resume transaction must be written to resume a suspended operation. After program or read operations are completed during a Program, Erase, or Data Integrity Check suspend, the Resume transaction is sent to resume the suspended operation.

After an Erase, Program or Data Integrity Check Resume transaction is issued, the RDYBSY bit in Status Register 1 will be set to a 1 and the programming operation will resume if one is suspended. If no program operation is suspended, the suspended erase operation will resume. If there is no suspended program, erase or data integrity check operation, the resume transaction is ignored.

Program, Erase or Data Integrity Check operations may be interrupted as often as necessary. For example, a program suspend transaction could immediately follow a program resume transaction, but for a program or erase operation to progress to completion there must be some period of time between resume and the next suspend transaction greater than or equal to t_{PEDRS}.

Figure 51 shows the flow of suspend and resume operation.

Figure 51. Suspend and Resume Sequence

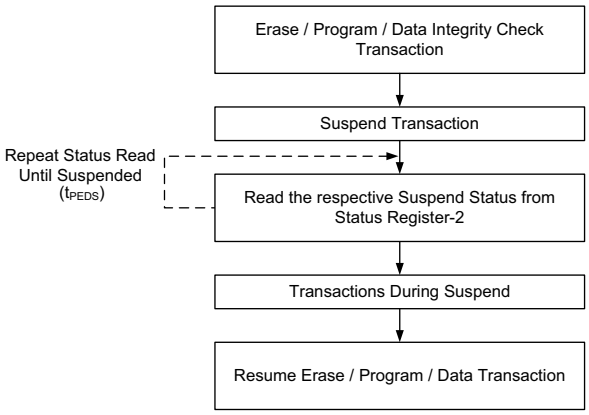

4.12.3 Suspend and Resume Related Registers and Transactions

Table 36. Suspend and Resume Related Registers and Transactions

Related Registers	Related SPI Transactions (see Table 75 on page 85)	Related Octal Transactions (see Table 76 on page 88)
Status Register 1 (STR1N, STR1V) (see Table 41 on page 65)	Suspend Erase / Program / Data Integrity Check (SPEPD_0_0)	Suspend Erase / Program / Data Integrity Check (SPEPD_0_0)
Status Register 2 (STR2V) (see Table 44 on page 67)	Resume Erase / Program / Data Integrity Check (RSEPD_0_0)	Resume Erase / Program / Data Integrity Check (RSEPD_0_0)
	Read Any Register (RDARG_C_0)	Read Any Register (RDARG_4_0)
	Read Status Register -1 (RDSR1_0_0)	Read Status Register -1 (RDSR1_4_0)
	Read Status Register -2 (RDSR2_0_0)	Read Status Register -2 (RDSR2_4_0)

4.13 Reset

HL-T/HS-T devices support four types of reset mechanisms.

- Hardware Reset (using RESET# input pin)
- POR
- CS# Signaling Reset
- Software Reset

4.13.1 Hardware Reset (Using RESET# Input Pin)

The RESET# input initiates the reset operation with a transition from logic HIGH to logic LOW for > t_{RP}, and causes the device to perform the full reset process that is performed during POR. The hardware reset process requires a period of t_{RH} to complete. See Table 82 on page 95 for timing specifications.

Figure 52. Hardware Reset using RESET# Input (Reset Pulse = t_{RP}(Min))

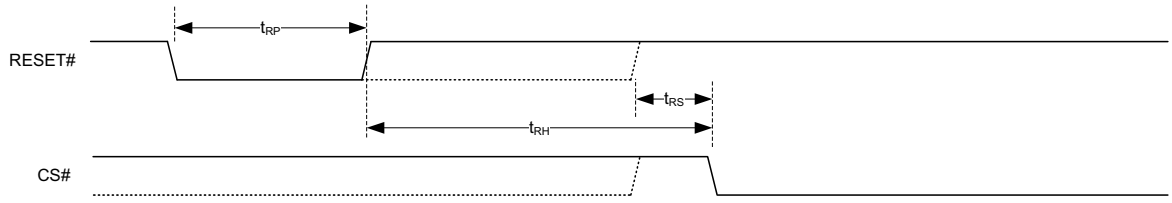

Figure 53. Hardware Reset using RESET# Input (Reset Pulse > (t_{RP} + t_{RH}))

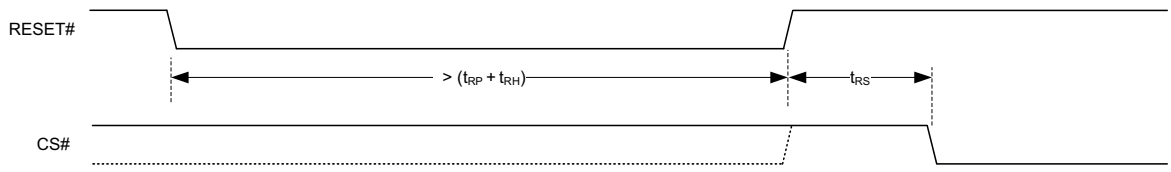

Figure 54. Hardware Reset using RESET# Input (Back to back Hardware Reset)

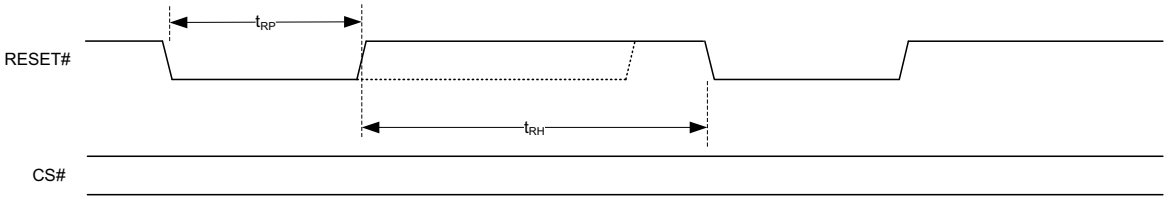

4.13.2 Power-On Reset (POR)

The device executes a POR process until a time delay of t_{PU} has elapsed after the moment that V_{CC} rises above the minimum V_{CC} threshold (see Figure 55 and Figure 56). The device must not be selected during power-up (t_{PU}). Therefore, CS# must rise with V_{CC}. No commands may be sent to the device until the end of t_{PU}. See Table 82 on page 95 for timing specifications.

RESET# is ignored during POR. If RESET# is LOW during POR and remains LOW through and beyond the end of t_{PU}, CS# must remain HIGH until t_{RS} after RESET# returns HIGH.

Figure 55. Reset LOW at the End of POR

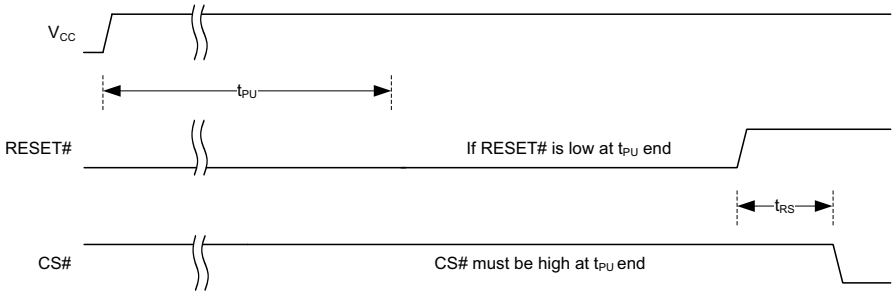

Figure 56. Reset HIGH at the End of POR

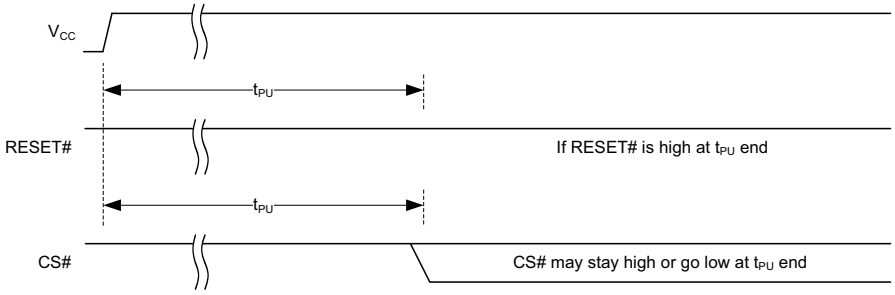

4.13.3 CS# Signaling Reset

The CS# Signaling Reset requires CS# and DQ0 signals. This reset method defines a signaling protocol, using existing signals, to initiate an SPI Flash hardware reset, independent of the device operating mode or number of package pins.

The Signaling Protocol is shown in Figure 57. See Table 82 on page 95 for timing specifications. The CS# signaling reset steps are as follows:

- CS# is driven active LOW.
- CK remains stable in either HIGH or LOW state.
- CS# and DQ0 are both driven LOW.
- CS# is driven HIGH (inactive).
- Repeat the above four steps, each time alternating the state of DQ0 for a total of four times.
- Reset occurs after the fourth CS# cycle completes and it goes HIGH (inactive).

After the fourth CS# pulse, the slave triggers its internal reset, the device terminates any operation in progress, makes all outputs high impedance, and ignores all read/write transactions for the duration of t_{RESET}. Then the device will be in standby state.

This reset sequence is not intended to be used at normal power on, but to be used only when the device is not responding to the system. This reset sequence will be operational from any state that the device may be in. Hence, CS# signaling reset is useful for packages that don't support a RESET# pin to provide behavior identical to Hardware Reset.

Figure 57. CS# Signaling Reset Protocol

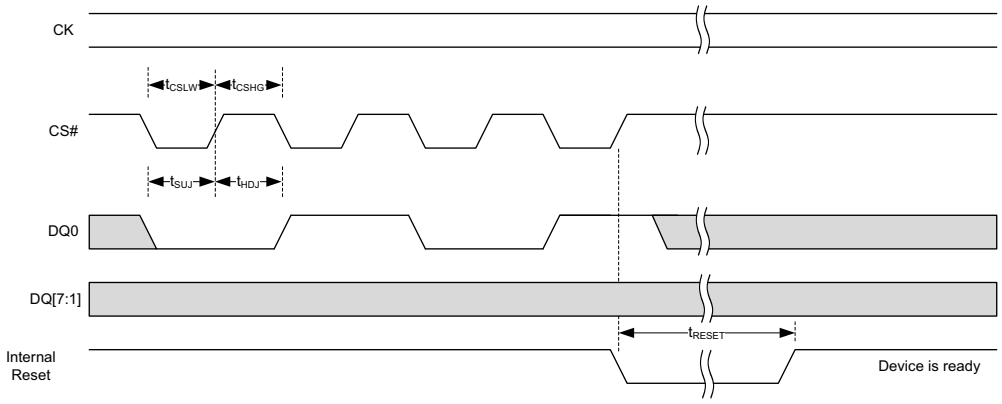

4.13.4 Software Reset

Software controlled Reset transaction restores the device to its initial power up state, by reloading volatile registers from nonvolatile default values except the protection registers. It also terminates the embedded operations. A reset transaction (SFRST_0_0) is executed when CS# is brought HIGH at the end of the transaction and requires tSR time to execute. See Table 82 for timing specifications.

The Reset Enable (SRSTE_0_0) transaction is required immediately before a Reset transaction (SFRST_0_0) such that a software reset is a sequence of the two transactions. Any transaction other than SFRST_0_0 following the SRSTE_0_0 transaction will clear the reset enable condition and prevent a later SFRST_0_0 transaction from being recognized.

The Reset (SFRST_0_0) transaction immediately following a SRSTE_0_0 transaction, initiates the software reset process. During software reset, only RDSR1_4_0, RDARG_C_0, and RDARG_4_0 of Status Register 1 are supported operations as long as the volatile and nonvolatile configuration states of the device are the same. If the configuration state is changing during software reset, reading Status Register 1 should only be done after the software reset time has elapsed.

The software reset is independent of the state of RESET#. If RESET# is HIGH or Unconnected, and the software reset transactions are issued, the device will perform software reset.

4.13.4.1 Software Reset Related Registers and Transactions

Table 37. Software Reset Related Registers and Transactions

Related Registers	Related SPI Transactions (see Table 75 on page 85)	Related Octal Transactions (see Table 76 on page 88)
N/A	Software Reset Enable (SRSTE_0_0)	Software Reset Enable (SRSTE_0_0)
	Software Reset (SFRST_0_0)	Software Reset (SFRST_0_0)

4.13.5 Reset Behavior

Table 38. Reset Behavior

Transaction / Register Name	POR	Hardware Reset and CS# Signaling Reset	Software Reset
Summary	• Device Reset • Status Bits Reset • All Volatile Registers Reset • Configuration Reload to Default • Volatile Protection Reset to Default • Nonvolatile Protection unchanged • Reset all Embedded operations	• Device Reset • Status Bits Reset • All Volatile Registers Reset • Configuration Reload to Default • Volatile Protection Reset to Default • Nonvolatile Protection unchanged • Reset all Embedded operations	• Device Reset • Status Bits Reset • Configuration Reload to Default • Volatile Protection Reset to Default • Nonvolatile Protection unchanged • Reset all Embedded operations
Interface Requirements	• All Inputs - Ignored • All Outputs - Tristated	• All Inputs - Ignored • All Outputs - Tristated	Transactions (SRSTE_0_0, SFRST_0_0)
Status Registers	Load from Nonvolatile Registers	Load from Nonvolatile Registers	Load from Nonvolatile Registers
Configuration Registers	Load from Nonvolatile Registers	Load from Nonvolatile Registers	Load from Nonvolatile Registers
Protection Registers	PPB Lock Register - Load based on ASPO[2:1]	PPB Lock Register - Load based on ASPO[2:1]	PPB Lock Register - No Change
	DYB Access Register - Load based on ASPO[4]	DYB Access Register - Load based on ASPO[4]	DYB Access Register - No Change
	Password Register - Load based on ASPO[2] and ASPO[0]	Password Register - Load based on ASPO[2] and ASPO[0]	Password Register - No Change
ECC Status Register	Load 0x00	Load 0x00	Load 0x00
AutoBoot Register	Load from Nonvolatile Registers	Load from Nonvolatile Registers	No Change
Data Integrity Check Register	Load 0x00	Load 0x00	Load 0x00
Interface CRC Register	Load 0x00	Load 0x00	Load 0x00
ECC Error Count Register	Load 0x00	Load 0x00	Load 0x00
Address Trap Register	Load 0x00	Load 0x00	Load 0x00
EnduraFlex Register	Load from Nonvolatile Registers	Load from Nonvolatile Registers	No Change
I/O Mode	Load from Nonvolatile Registers	Load from Nonvolatile Registers	No Change
Memory/Register Erase in Progress	Not Applicable	Abort Erase	Abort Erase
Memory/Register Program in Progress	Not Applicable	Abort Program	Abort Program
Memory/Register Read in Progress	Not Applicable	Abort Read	Not Applicable
INT# Pin Configuration Register	Load 0xFF	Load 0xFF	Load 0xFF
INT# Pin Status Register	Load 0xFF	Load 0xFF	Load 0xFF

4.14 Power Modes

4.14.1 Active Power and Standby Power Modes

The device is enabled and in the Active Power mode when Chip Select (CS#) is LOW. When CS# is HIGH, the device is disabled, but may still be in an Active Power mode until all program, erase, and write operations have completed. The device then goes into the Standby Power mode, and power consumption drops to I_{SB}. See Table 80 on page 92 for parameter specifications.

4.14.2 Deep Power Down (DPD) Mode

Although the standby current during normal operation is relatively low, standby current can be further reduced with the DPD mode. The lower power consumption makes the DPD mode especially useful for battery powered applications.

4.14.2.1 Enter DPD

The device can enter DPD mode in two ways:

1. Enter DPD Mode using Transaction
2. Enter DPD Mode upon Power-up or Reset

Enter DPD Mode using the Enter Deep Power Down Mode Transaction

The DPD mode is enabled by sending the Enter Deep Power Down Mode Transaction (ENDPD_0_0) then waiting for a delay of t_{ENTDPD}. The CS# pin must be driven HIGH after the command byte has been latched. If this is not done, then the DPD transaction will not be executed. After CS# is driven HIGH, the power-down state will be entered within the time duration of t_{ENTDPD} (see Table 82 on page 95 for timing specifications) and power consumption drops to I_{DPD}. See Table 80 on page 92 for parameter specifications.

DPD can only be entered from an idle state. The DPD transaction is accepted only while the device is not performing an embedded algorithm as indicated by the Status Register 1 volatile, Device Ready/Busy Status Flag (RDYBSY) bit being cleared to zero (STR1V[0] = RDYBSY = 0). It is not allowed to send any transaction to device during t_{ENTDPD} time.

Enter DPD Mode upon Power-up or Reset

If the DPDPOR configuration bit is enabled (CFR4NV[2] = 1), the device will be in DPD mode after the completion of Power-up, Hardware Reset or CS# Signaling Reset. During POR or Reset the CS# should follow the voltage applied on VCC to enter DPD mode as shown in Figure 58. It is not allowed to send any transaction to device during t_{ENTDPD} time.

Figure 58. Enter DPD Mode Upon Power-Up or Reset

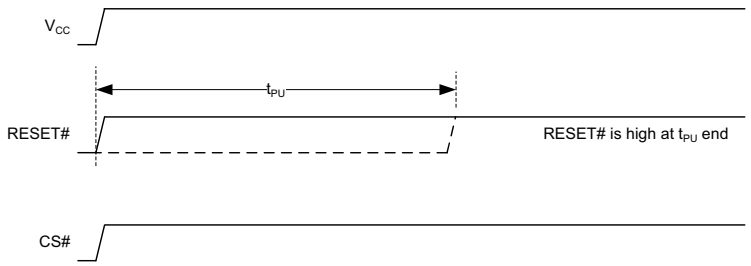

4.14.2.2 Exit DPD

Device leaves DPD mode in one of the following ways:

Exit DPD Mode upon Hardware Reset

When the device is in DPD and CFR4NV[2] = 0, a Hardware reset will return the device to Standby mode.

Exit DPD Mode upon CS# Pulse

Device exits DPD upon receipt of CS# pulse of width t_{CSDPD}. The CS# should be driven HIGH after the pulse. HIGH to LOW transition on CS# is required to start a transaction cycle after the DPD exit. It takes t_{EXTDPD} to come out of DPD mode. The device will not respond until after t_{EXTDPD}.

Figure 59. Exit DPD Mode

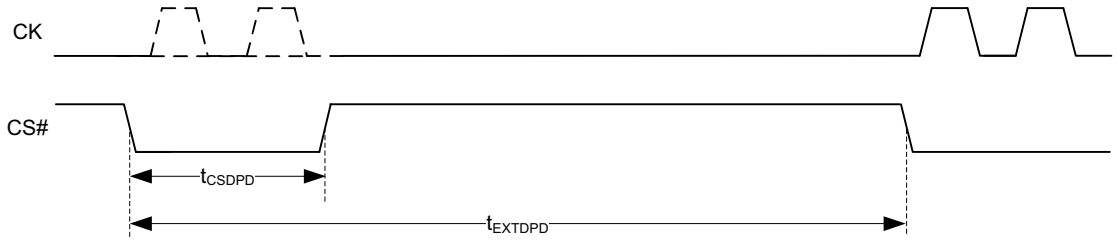

The device maintains its configuration during DPD, meaning the device exits DPD in the same state as it entered. Registers such as the ECC Status, ECC Error Detection Counter, Address Trap, and Interrupt Status Registers will be cleared.

4.14.2.3 DPD Related Registers and Transactions

Table 39. DPD Related Registers and Transactions

Related Registers	Related SPI Transactions (see Table 75 on page 85)	Related Octal Transactions (see Table 76 on page 88)
Configuration Register 4 (CFR4N, CFR4V) (see Table 52 on page 72)	Enter Deep Power Down Mode (ENDPD_0_0)	Enter Deep Power Down Mode (ENDPD_0_0)

4.15 Power Up and Power Down

The device must not be selected at power up or power down until V_{CC} reaches the correct value as follows:

- V_{CC} (min) at power up, and then for a further delay of t_{PU}
- V_{SS} at power down

4.15.1 Power Up

The device ignores all transactions until a time delay of t_{PU} has elapsed after the moment that V_{CC} rises above the minimum V_{CC} threshold (see Figure 60). However, correct operation of the device is not guaranteed if V_{CC} returns below V_{CC} (min) during t_{PU}. No command should be sent to the device until the end of t_{PU}.

The device draws I_{POR} current during t_{PU}. After power up (t_{PU}), the WRPGEN bit is reset and there is the option to be in the DPD mode or Standby mode. The DPDPOR bit in Configuration Register 4 (CFR4N[2]) controls if the device will be in DPD or Standby mode after the completion of POR (see Table 52 on page 72). If the DPDPOR bit is enabled (CFR4N[2] = 1) the device is in DPD mode after power up. A Hardware reset (RESET#) required to return the device to Standby mode after POR.

Figure 60. Power Up

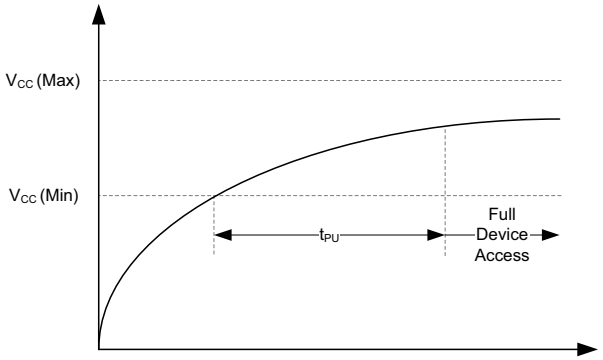

4.15.2 Power Down

During power down or voltage drops below V_{CC}(cut-off), the voltage must drop below V_{CC}(LOW) for a period of t_{PD} for the part to initialize correctly on power up (see Figure 61). If during a voltage drop the V_{CC} stays above V_{CC}(cut-off) the part will stay initialized and will work correctly when V_{CC} is again above V_{CC}(min). In the event POR did not complete correctly after power up, the assertion of the RESET# signal will restart the POR process.

Figure 61. Power Down and Voltage Drop

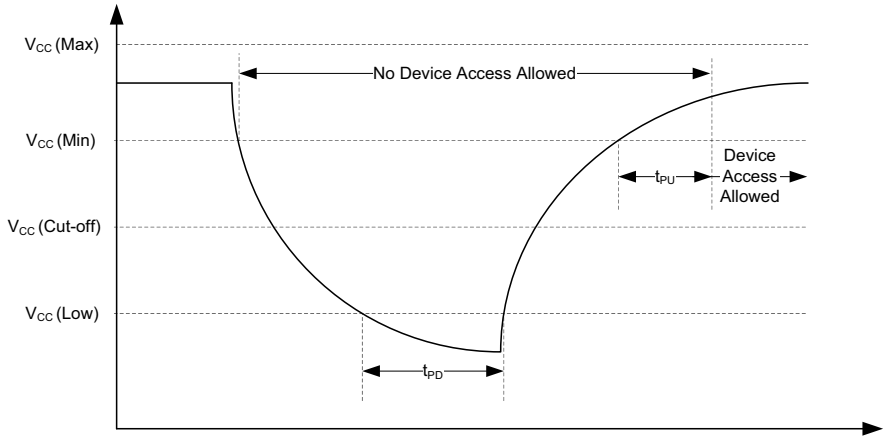

4.15.3 Power Up and Power Down Sequence

The following power sequence needs to be followed for the guaranteed reliable operation of HL-T/HS-T devices:

- Apply V_{CC} before V_{CCQ} during power up sequence. V_{CC} and V_{CCQ} can be applied simultaneously during power up, as long as V_{CCQ} does not exceed V_{CC}.
- During the power down mode, reduce the V_{CCQ} before V_{CC}. V_{CC} and V_{CCQ} can be reduced simultaneously during power down, as long as V_{CCQ} does not exceed V_{CC}.
- It is recommended to keep $V_{CCQ} \leq V_{CC}$.

Figure 62. Power Up and Power Down Sequence

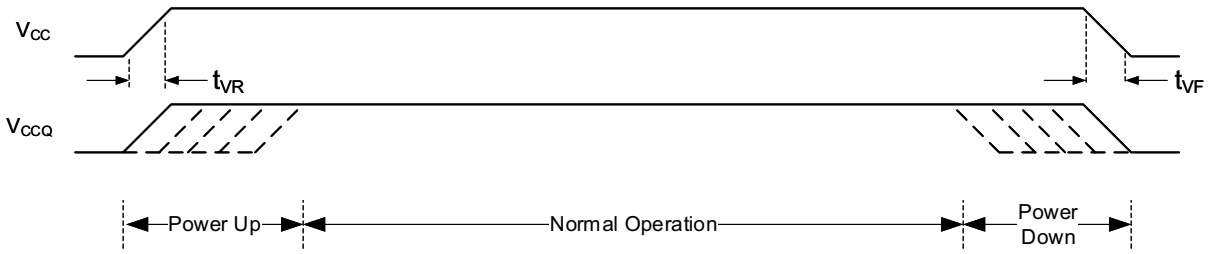

5. Registers

Registers are small groups of storage cells used to configure as well as report the status of the device operations. HL-T/HS-T family of devices use separate nonvolatile and volatile storage groups to implement the different register bit types for legacy compatibility as well as new functionality. Each register is organized as a group of volatile bits with associated nonvolatile bits (if permanence is required). During power-up, hardware reset or software reset, the data in the nonvolatile bits of the register is transferred to the volatile bits to provide the default state of the volatile bits. When writing new data to nonvolatile bits of the register, the volatile bits are also updated with the new data. However, when writing new data to the volatile register bits the nonvolatile bits retain the old data. The register structure is shown in Figure 63.

Figure 63. Register Structure

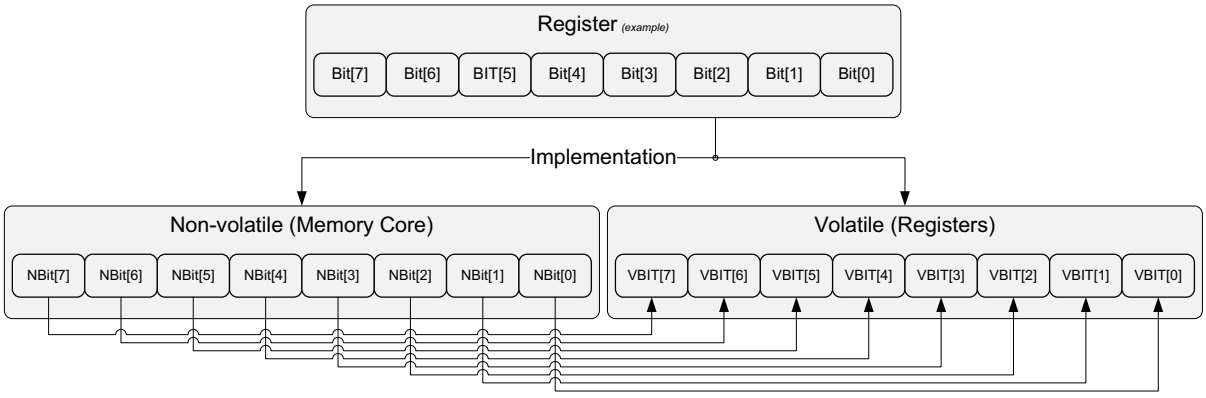

Figure 64. Data Movement Within Register Components

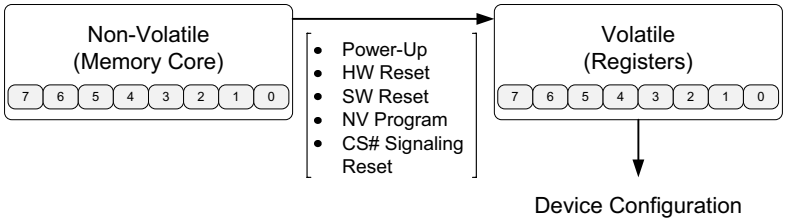

5.1 Register Naming Convention

Table 40. Register Bit Description Convention

Bit Number	Name	Function	Read/Write	Factory Default (binary)	Description
REGNAME#T[x] T = N, V, O Descending Order	–	–	Possible Options: N/A - Not Applicable R - Readable Only R/W - Readable and Writable R/1 - Readable and OTP	Possible Options: 0 1	Format: Description of the Configuration bit 0 = Option ‘0’ selection of the Bit 1 = Option '1' selection of the Bit Dependency: Is this Bit part of a function which requires multiple bits for implementation?

5.2 Status Register 1 (STR1x)

Status Register 1 contains both status and control bits. The functionality of supported Status Register 1 type is described in Table 41.

Table 41. Status Register 1[21]

Bit Number	Name	Function	Read/Write N = Nonvolatile V = Volatile	Factory Default (binary)	Description
STR1N[7] STR1V[7]	RESRVD	Reserved for Future Use	N->R V->R	0	This bit is Reserved for future use. This bit must always be written/loaded to its default state.
STR1V[6]	PRGERR	Programming Error Status Flag	V -> R	0	Description: The PRGERR bit indicates program operation success or failure. When the PRGERR bit is set to a '1', it indicates that there was an error in the last programming operation. PRGERR bit is also set when a program operation is attempted within a protected memory region. When PRGERR is set, it can only be cleared with the Clear Program and Erase Failure Flags (CLPEF_0_0) transaction or a hardware/software reset. **Note** The device will only go to standby mode once the PRGERR flag is cleared. Selection Options: 0 = Last programming operation was successful 1 = Last programming operation was unsuccessful Dependency: N/A
STR1V[5]	ERSERR	Erasing Error Status Flag	V -> R	0	Description: The ERSERR bit indicates erase operation success or failure. When the ERSERR bit is set to a '1', it indicates that there was an error in the last erasing operation. ERSERR bit is also set when a erase operation is attempted within a protected memory sector. When ERSERR is set, it can only be cleared with the Clear Program and Erase Failure Flags (CLPEF_0_0) transaction or a hardware/software reset. **Note** The device will only go to standby mode once the ERSERR flag is cleared. Selection Options: 0 = Last erase operation was successful 1 = Last erase operation was unsuccessful Dependency: N/A
STR1N[4:2] STR1V[4:2]	LBPROT[2:0]	Legacy Block Protection based Memory Array size selection	If PLPROT = 0 N -> R/W V -> R/W If PLPROT = 1 N -> R V -> R	000	Description: The LBPROT[2:0] bits define the memory array size to be protected against program and erase transactions. Based on the LBPROT[2:0] configuration, either top 1/64, 1/4, 1/2, etc. or bottom 1/64, 1/4, 1/2, etc., or up to the entire array is protected. **Note** If PLPROT bit - Permanent Locking selection of Legacy Block Protection and 4 KB Sector Architecture (CFR1x[4]) is set to a '1', the LBPROT[2:0] bits cannot be erased or programmed. Selection Options: 000 = Protection is disabled 001 = 1/64th of the (top/bottom) array protection is enabled 010 = 1/32nd of the (top/bottom) array protection is enabled ….. 111 = All sectors are protected Dependency: TBPROT (CFR1x[5])
STR1V[1]	WRPGEN	Write/Program Enable Status Flag	V -> R	0	Description: The WRPGEN bit must be set to '1' to enable all program, erase or register write operations - it provides protection against inadvertent changes to memory or register values. The Write Enable (WRENB_0_0) transaction set the WRPGEN bit to '1' to allow program, erase or write transactions to execute. The Write Disable (WRDIS_0_0) transaction resets WRPGEN to a '0' to prevent all program, erase, and write transactions from execution. The WRPGEN bit is cleared to '0' at the end of any successful program, erase or register write operation. After a power down / power up sequence or a hardware/software reset, the Deep Power Down WRPGEN bit is cleared to '0'. Selection Options: 0 = Program, erase or register write is disabled 1 = Program, erase or register write is enabled Dependency: N/A

Note
21. STR1x value during POR, Hardware Reset, Software Reset, DPD Exit, and CS# Signaling Reset is not valid.

Table 41. Status Register 1[21] (Continued)

Bit Number	Name	Function	Read/Write N = Nonvolatile V = Volatile	Factory Default (binary)	Description
STR1V[0]	RDYBSY	Device Ready/Busy Status Flag	V -> R	0	Description: The RDYBSY bit indicates whether the device is performing an embedded operation or is in standby mode ready to receive new transactions. **Note** The PRGERR and ERSERR status bits are updated while RDYBSY is set. If PRGERR or ERSERR are set, the RDYBSY bit will remain set indicating the device is busy and unable to receive new transactions. A Clear Program and Erase Failure Flags (CLPEF_0_0) transaction must be executed to return the device to standby mode. Selection Options: 0 = Device is in standby mode ready to receive new operation transactions 1 = Device is busy and unable to receive new operation transactions Dependency: N/A

Note
21. STR1x value during POR, Hardware Reset, Software Reset, DPD Exit, and CS# Signaling Reset is not valid.

Table 42. PRGERR Summary

Error Flag	Symbol	Conditions
Program Error	PRGERR	Bits cannot be programmed '1' to '0'
		Trying to program in a protected region
		If ASP0[2] or ASP0[1] is 0, any nonvolatile register write attempting to change the value of CFR1N[6:2]/CFR1V[6:2]
		After the Password Protection Mode is selected and ASP Password Register update transaction executed
		SafeBoot Failure
		Configuration Failure

Table 43. ERSERR Summary

Error Flag	Symbol	Conditions
Erase Error	ERSERR	Sector Device Erase - All bits cannot be erased to '1's
		Trying to erase a protected region
		Register Erase - All bits cannot be erased to '1's during Erase portion of Register Write
		SafeBoot Failure

5.3 Status Register 2 (STR2x)

Status Register 2 provides device status on operations. The functionality of supported Status Register 2 type is described in Table 44.

Table 44. Status Register 2[22]

Bit Number	Name	Function	Read/Write N = Nonvolatile V = Volatile	Factory Default (binary)	Description
STR2V[7:5]	RESRVD	Reserved for Future Use	V -> R	0	This bit is Reserved for future use. This bit must always be written/loaded to its default state.
STR2V[4]	DICRCS	Memory Array Data Integrity Cyclic Redundancy Check Suspend Status Flag	V -> R	0	Description: The DICRCS bit is used to determine when the device is in Memory Array Data Integrity Cyclic Redundancy Check suspend mode. Selection Options: 0 = Memory Array Data Integrity Cyclic Redundancy Check is not in suspend mode 1 = Memory Array Data Integrity Cyclic Redundancy Check is in suspend mode Dependency: N/A
STR2V[3]	DICRCA	Memory Array Data Integrity Cyclic Redundancy Check Abort Status Flag	V -> R	0	Description: The DICRCA bit indicates that the Memory Array Data Integrity CRC calculation operation was aborted. The abort condition is based on ending address (ENDADD) and starting address (STRADD) relationship. If ENDADD < STRADD + 3, then DICRCA will be set and the device will return to the Standby state. DICRCA flag gets cleared at the next Data Integrity CRC calculation operation when ENDADD ≥ STRADD + 3. Selection Options: 0 = Memory Array Data Integrity CRC calculation Is not aborted 1 = Memory Array Data Integrity CRC calculation is aborted Dependency: N/A
STR2V[2]	SESTAT	Sector Erase Success/Failure Status Flag	V -> R	0	Description: The SESTAT bit indicates whether the erase operation on the sector completed successfully. Evaluate Erase Status transaction (EVERS_4_0) must be executed prior to reading SESTAT bit which specifies the sector address. Selection Options: 1 = Addressed sector (EVERS_4_0) was erased successfully 0 = Addressed sector (EVERS_4_0) was not erased successfully Dependency: N/A
STR2V[1]	ERASES	Erase operation Suspend Status Flag	V -> R	0	Description: The ERASES bit is used to indicate if the Erase operation is suspended. Selection Options: 0 = Erase operation is not in suspend mode 1 = Erase operation is in suspend mode Dependency: N/A
STR2V[0]	PROGMS	Program operation Suspend Status Flag	V -> R	0	Description: The PROGMS bit is used to indicate if the Program operation is suspended. Selection Options: 0 = Program operation is not in suspend mode 1 = Program operation is in suspend mode Dependency: N/A

Note
22. STR2x value during POR, Hardware Reset, Software Reset, DPD Exit, and CS# Signaling Reset is not valid. STR2x bits are valid only when STR1V[0] / RDYBSY = 0.

5.4 Configuration Register 1 (CFR1x)

Configuration Register 1 controls interface and data protection functions.

Table 45. Configuration Register 1

Bit Number	Name	Function	Read/Write N = Nonvolatile V = Volatile	Factory Default (binary)	Description
CFR1N[7] CFR1V[7]	RESRVD	Reserved for Future Use	N -> R/W V -> R/W	0	This bit is Reserved for future use. This bit must always be written/loaded to its default state.
CFR1N[6] CFR1V[6]	SP4KBS	Split 4 KB Sectors selection between top and bottom address space	If PLPROT = 0 N -> R/W V -> R If PLPROT = 1 N -> R V -> R	0	Description: The SP4KBS bit selects whether the 4 KB sectors are grouped together or evenly split between High and LOW address ranges. Selection Options: 0 = 4 KB Sectors are grouped together 1 = 4 KB Sectors are split between High and Low Addresses Dependency: TB4KBS(CFR1N[2])
CFR1N[5] CFR1V[5]	TBPROT	Top or Bottom Protection selection for Legacy Protection Mode	If PLPROT = 0 N -> R/W V -> R If PLPROT = 1 N -> R V -> R	0	Description: The TBPROT bit selects the reference point of the Legacy Block Protection bits (LBPROT[2:0]) in the Status Register on whether the protection starts from the top or starts from the bottom of the address range. The bit also selects a memory address range (lowest or highest) to remain readable is available for reading during Read Password Protection mode even before a successful Password entry is completed. Selection Options: 0 = Legacy Protection is applicable in the top half of the address range 1 = Legacy Protection is applicable in the bottom half of the address range Dependency: LBPROT[2:0] (STR1x[3:1])
CFR1N[4] CFR1V[4]	PLPROT	Permanent Locking selection of Legacy Block Protection and 4 KB Sector Architecture	N -> R/1 V -> R	0	Description: The PLPROT bit permanently protects the Legacy Block Protection and 4 KB Sector location. It thereby permanently protects the memory array protection scheme and sector architecture. **Note** PLPROT protects LBPROT[2:0], SP4KBS, TBPROT, and TB4KBS bits from program and erase, and it is recommended to configure these bits before configuring the PLPROT bit. Selection Options: 0 = Legacy Block Protection and 4 KB Sector Location are not protected 1 = Legacy Block Protection and 4 KB Sector Location are protected Dependency: N/A
CFR1N[3] CFR1V[3]	RESRVD	Reserved for Future Use	N -> R/W V -> R/W	0	This bit is Reserved for future use. This bit must always be written/loaded to its default state.
CFR1N[2] CFR1V[2]	TB4KBS	Top or Bottom Address Range selection for 4 KB Sector Block	If PLPROT = 0 N -> R/W V -> R If PLPROT = 1 N -> R V -> R	0	Description: The TB4KBP bit defines the logical address location of the 4 KB sector block. The 4 KB sector block replaces the fitting portion of the highest or lowest address sector. Selection Options: 0 = 4 KB Sector Block is in the bottom of the memory address space 1 = 4 KB Sector Block is in the top of the memory address space Dependency: SP4KBS (CFR1x[6])
CFR1N[1] CFR1V[1]	RESRVD	Reserved for Future Use	N -> R/W V -> R/W	0	This bit is Reserved for future use. This bit must always be written/loaded to its default state.
CFR1N[0] CFR1V[0]	TLPROT	Temporary Locking selection of Legacy Block Protection and Sector Architecture	N -> R V -> R/W	0	Description: The TLPROT bit temporarily protects the Legacy Block Protection and 4 KB Sector location. Upon power-up or a hardware reset, TLPROT is set to its default state. When selected, it protects the memory array protection scheme and sector architecture from any changes. **Note** TLPROT protects LBPROT[2:0], SP4KBS, TBPROT, and TB4KBS bits from program and erase. Selection Options: 0 = Legacy Block Protection and 4 KB Sector Location are not protected 1 = Legacy Block Protection and 4 KB Sector Location are temporarily protected Dependency: N/A

Table 46. 4 KB Parameter Sector Location Selection

SP4KBS	TB4KBS	4 KB Location
0	0	4 KB physical sectors at bottom (Low address)
0	1	4 KB physical sectors at top, (High address)
1	X	4 KB Parameter sectors are split between top (High Address) and bottom (Low Address)

Table 47. PLPROT and TLPROT Protection

PLPROT	TLPROT	Array Protection and 4K Sector
0	0	Unprotected (Unlocked)
1	X	TBPROT, LBPROTx, SP4KBS, TB4KBS - Permanently Protected (Locked)
0	1	TBPROT, LBPROTx, SP4KBS, TB4KBS - Protected (Locked) till next Power-down

5.5 Configuration Register 2 (CFR2x)

Configuration Register 2 controls memory read latency and address byte length selection.

Table 48. Configuration Register 2

Bit Number	Name	Function	Read/Write N = Nonvolatile V = Volatile	Factory Default (binary)	Description
CFR2N[7] CFR2V[7]	ADRBYT	Address Byte Length selection between 3 or 4 bytes for Instructions	N -> R/W V -> R/W	0	Description: The ADRBYT bit controls the expected address length for all instructions that require address and is selectable between 3 Bytes or 4 Bytes. Selection Options: 0 = Instructions will use 3 Bytes for address 1 = Instructions will use 4 Bytes for address Dependency: N/A
CFR2N[6:4] CFR2V[6:4]	RESRVD	Reserved for Future Use	N -> R/W V -> R/W	0000	These bits are Reserved for future use. This bit must always be written/loaded to its default state.
CFR2N[3:0] CFR2V[3:0]	MEMLAT[3:0]	Memory Array Read Latency selection - Dummy cycles required for initial data access	N -> R/W V -> R/W	1000	Description: The MEMLAT[3:0] bits control the read latency (dummy cycles) delay in all variable latency memory array and nonvolatile register read transactions. MEMLAT selection allows the user to adjust the read latency during normal operation based on different operating frequencies. Selection Options: 0000 = 0/5 Latency Cycles Selection based on transaction opcodes ….. 1111 = 15/28 Latency Cycles Selection based on transaction opcodes Dependency: N/A

Table 49. Latency Code (Cycles) Versus Frequency[23, 24, 26]

Latency Code	Number of Cycles (1-1-1 / 8-8-8)	SDR SPI Read Transactions (MHz) (1S-1S-1S)	SDR Octal Read Transactions (MHz) (8S-8S-8S)	DDR Octal Read Transactions (MHz) (8D-8D-8D)
		RDAY2_C_0 RDSSR_4_0 RDARG_C_0[25] RDECC_4_0 RDPPB_4_0	RDAY1_4_0 RDSSR_4_0 RDARG_4_0[25] RDECC_4_0 RDPPB_4_0	RDAY2_4_0 RDSSR_4_0 RDARG_4_0[25] RDECC_4_0 RDPPB_4_0
0000	0 / 5	50	50	42
0001	1 / 6	68	64	57
0010	2 / 8	81	92	85
0011	3 / 10	93	121	107
0100	4 / 12	106	150	121
0101	5 / 14	118	166 (HL-T) / 178 (HS-T)	135
0110	6 / 16	131	200	150
0111	7 / 18	143	200	164
1000	8 / 20	156	200	166 (HL-T) / 178 (HS-T)
1001	9 / 22	166	200	192
1010	10 / 23	166	200	200
1011	11 / 24	166	200	200
1100	12 / 25	166	200	200
1101	13 / 26	166	200	200
1110	14 / 27	166	200	200
1111	15 / 28	166	200	200

Notes

23. When using the ECC error reporting mechanisms, the read output data must be at least 2 bytes for correct ECC reporting.
24. CK frequency > 200 MHz SDR, or > 200 MHz DDR is not supported by HS-T family of devices and CK frequency > 166 MHz SDR, or > 166 MHz DDR is not supported by HL-T family of devices.
25. RDARG_C_0 and RDARG_4_0 uses these latency cycles for reading nonvolatile registers.
26. RSFDP_3_0 always have a dummy cycle of eight and the maximum frequencies for different interfaces related to eight dummy cycles.

5.6 Configuration Register 3 (CFR3x)

Configuration Register 3 controls transaction behavior.

Table 50. Configuration Register 3

Bit Number	Name	Function	Read/Write N = Nonvolatile V = Volatile	Factory Default (binary)	Description
CFR3N[7:6] CFR3V[7:6]	VRGLAT[1:0]	Volatile Register Read Latency selection - Dummy cycles required for initial data access	N -> R/W V -> R/W	00	Description: The VRGLAT[1:0] bits control the read latency (dummy cycles) delay in all variable latency register read transactions. VRGLAT[1:0] selection allows the user to adjust the read latency during normal operation based on different operating frequencies. Selection Options: 00 = 0/0/32 Latency Cycles Selection based on transaction opcodes ….. 11 = 2/2/32 Latency Cycles Selection based on transaction opcodes Dependency: N/A
CFR3N[5] CFR3V[5]	BLKCHK	Blank Check selection during Erase operation for better endurance	N -> R/W V -> R/W	0	Description: When this feature is enabled an erase transaction first evaluates the erase status of the sector. If the sector is found to erased, the erase operation is aborted. In other words, the erase operation is only executed if programmed bits are found in the sector. Disabling BLKCHK executes an erase operation unconditionally. Selection Options: 0 = Blank Check is disabled before executing an erase operation 1 = Blank Check evaluation is enabled before executing an erase operation Dependency: N/A
CFR3N[4] CFR3V[4]	PGMBUF	Program Buffer Size selection	N -> R/W V -> R/W	0	Description: The PGMBUF bit selects the Programming Buffer size which is used for page programming. Program buffer size affects the device programming time. **Note** If programming data exceeds the program buffer size, data gets wrapped. Selection Options: 0 = 256 Byte Write Buffer Size 1 = 512 Byte Write Buffer Size Dependency: N/A
CFR3N[3] CFR3V[3]	UNHYSA	Uniform or Hybrid Sector Architecture selection	N -> R/W V -> R	0	Description: The UNHYSA bit selects between uniform (all 256 KB sectors) or hybrid (4 KB sectors and 256 KB sectors) sector architecture. If hybrid sector architecture is selected, 4 KB sector block is made part of the main Flash array address map. The 4 KB sector block can overlay at either the highest or the lowest address range of the device. If uniform sector architecture is selected, 4 KB sector block is removed from the address map and all sectors are of uniform size. **Note** Hybrid sector architecture also enables 4 KB Sector Erase transaction (20h). Otherwise, 4 KB Sector Erase transaction, if issued, is ignored by the device. Selection Options: 0 = Hybrid Sector Architecture (combination of 4 KB sectors and 256 KB sectors) 1 = Uniform Sector Architecture (all 256 KB sectors) Dependency: ST4KBP(CFR1N[6]), TB4KBP(CFR1N[2])
CFR3N[2] CFR3V[2]	RESRVD	Reserved for Future Use	N -> R/W V -> R/W	0	This bit is Reserved for future use. This bit must always be written/loaded to its default state.
CFR3N[1] CFR3V[1]	RESRVD	Reserved for Future Use	N -> R/W V -> R/W	0	
CFR3N[0] CFR3V[0]	RESRVD	Reserved for Future Use	N -> R/W V -> R/W	0	

Table 51. Register Latency Code (Cycles) Versus Frequency[28, 30]

Latency Code	SDR SPI Register Transaction Latency Dummy Cycles (1S-1S-1S)[27]			SDR Octal Register Transactions Latency Dummy Cycle (8S-8S-8S)		DDR Octal Register Transactions Latency Dummy Cycle (8D-8D-D8)	
	Frequency	RDARG_C_0[29] RDDYB_4_0	RDPLB_0_0 RDIDN_0_0 RDSR1_0_0 RDSR2_0_0	Frequency	RDARG_4_0[29] RDPLB_0_0 RDDYB_4_0 RDIDN_0_0 RDSR1_0_0 RDSR2_0_0	Frequency	RDARG_4_0[29] RDPLB_0_0 RDDYB_4_0 RDIDN_0_0 RDSR1_0_0 RDSR2_0_0
00	50 MHz	0	0	50 MHz	3	25 MHz	3
01	133 MHz	1	0	133 MHz	4	66 MHz	4
10	133 MHz	1	1	166 MHz	5	166 MHz (HL-T) / 200 MHz (HS-T)	5
11	166 MHz	2	2	200 MHz	6	200 MHz	6

Notes
27. CK frequency > 166 MHz SDR, is not supported.
28. RDUID_4_0 alway has 32 cycles of latency. Maximum frequency under SDR SPI is 166 MHz, under HS-T SDR/DDR Octal is 200 MHz and under HL-T SDR/DDR Octal is 166 MHz.
29. RDARG_C_0 and RDARG_4_0 uses these dummy cycles for reading volatile registers.
30. RDCRC_4_0 alway has 8 cycles of latency. Maximum frequency under SDR SPI is 166 MHz, under HS-T SDR/DDR Octal is 200 MHz and under HL-T SDR/DDR Octal is 166 MHz

5.7 Configuration Register 4 (CFR4x)

Configuration Register 4 controls the main Flash array read transactions burst wrap behavior and output driver impedance.

Table 52. Configuration Register 4

Bit Number	Name	Function	Read/Write N = Nonvolatile V = Volatile	Factory Default (binary)	Description
CFR4N[7:5] CFR4V[7:5]	IOIMPD[2:0]	I/O Driver Output Impedance selection	N -> R/W V -> R/W	101	Description: The IOIMPD[2:0] bits select the IO driver output impedance (drive strength). The output impedance configuration bits adjust the drive strength during normal device operation to meet system signal integrity requirements. Selection Options: 000 = 45Ω 001 = 120Ω 010 = 90Ω 011 = 60Ω 100 = 45Ω 101 = 30Ω (Factory Default) 110 = 20Ω 111 = 15Ω Dependency: N/A
CFR4N[4] CFR4V[4]	RBSTWP	Read Burst Wrap Enable selection	N -> R/W V -> R/W	0	Description: The RBSTWP bit selects the read burst wrap feature. It allows the device to enter and exit burst wrapped read mode during normal operation. The wrap length is selected by RBSTWL[1:0] bits. Selection Options: 0 = Read Wrapped Burst disabled 1 = Read Wrapped Burst enabled Dependency: RBSTWL[1:0] (CFR4x[1:0])
CFR4N[3] CFR4V[3]	ECC12S	Error Correction Code (ECC) 1-bit or 1-bit/2-bit error correction selection	N -> R/W V -> R/W	1	Description: The ECC12S bit selects between 1-bit ECC error detection/ correction or both 1-bit ECC error detection and correction and 2-bit ECC error detection. This configuration option affects Address Trap Register and ECC Counter Register functionalities as well. The host needs to erase and reprogram the data in the Semper Flash memory upon ECC configuration change (1-bit correction to 1-bit correction and 2-bit detection or vice versa). Selection Options: 0 = 1-bit ECC Error Detection/Correction 1 = 1-bit ECC Error Detection/Correction and 2-bit ECC error detection Dependency: N/A

Table 52. Configuration Register 4 (Continued)

Bit Number	Name	Function	Read/Write N = Nonvolatile V = Volatile	Factory Default (binary)	Description
CFR4N[2] CFR4V[2]	DPDPOR	Deep Power Down power saving mode entry selection upon POR	N -> R/W V -> R	0	Description: The DPDPOR bit selects if the device will be in either Deep Power Down (DPD) mode or the Standby mode after the completion of POR. If enabled, DPDPOR configures the device to start in DPD mode to reduce current consumption until the device is needed. If the device is in DPD, a pulse on CS# or a Hardware reset will return the device to Standby mode. Selection Options: 0 = Standby mode is entered upon the completion of POR 1 = Deep Power Down Power mode is entered upon the completion of POR Dependency: N/A
CFR4N[1:0] CFR4V[1:0]	RBSTWL[1:0]	Read Burst Wrap Length selection	N -> R/W V -> R/W	00	Description: The RBSTWL[1:0] bits select the read burst wrap length and alignment during normal operation. It selects the fixed length/aligned group of 8-, 16-, 32-, or 64-bytes. Selection Options: 00 = 8 Bytes Wrap length 01 = 16 Bytes Wrap length 10 = 32 Bytes Wrap length 11 = 64 Bytes Wrap length Dependency: RBSTWP (CFR4x[4])

Table 53. Output Data Wrap Sequence

Wrap Boundary (Bytes)	Start Address (Hex)	Address Sequence (Hex)
Sequential	XXXXXX03	03, 04, 05, 06, 07, 08, 09, 0A, 0B, 0C, 0D, 0E, 0F, 10, 11, 12, 13, 14, 15, 16, 17, 18.
8	XXXXXX00	00, 01, 02, 03, 04, 05, 06, 07, 00, 01, 02.
8	XXXXXX07	07, 00, 01, 02, 03, 04, 05, 06, 07, 00, 01.
16	XXXXXX02	02, 03, 04, 05, 06, 07, 08, 09, 0A, 0B, 0C, 0D, 0E, 0F, 00, 01, 02, 03.
16	XXXXXX0C	0C, 0D, 0E, 0F, 00, 01, 02, 03, 04, 05, 06, 07, 08, 09, 0A, 0B, 0C, 0D, 0E.
32	XXXXXX0A	0A, 0B, 0C, 0D, 0E, 0F, 10, 11, 12, 13, 14, 15, 16, 17, 18, 19, 1A, 1B, 1C, 1D, 1E, 1F, 00, 01, 02, 03, 04, 05, 06, 07, 08, 09, 0A, 0B, 0C, 0D, 0E, 0F.
32	XXXXXX1E	1E, 1F, 00, 01, 02, 03, 04, 05, 06, 07, 08, 09, 0A, 0B, 0C, 0D, 0E, 0F, 10, 11, 12, 13, 14, 15, 16, 17, 18, 19, 1A, 1B, 1C, 1D, 1E, 1F, 00.
64	XXXXXX03	03, 04, 05, 06, 07, 08, 09, 0A, 0B, 0C, 0D, 0E, 0F, 10, 11, 12, 13, 14, 15, 16, 17, 18, 19, 1A, 1B, 1C, 1D, 1E, 1F, 20, 21, 22, 23, 24, 25, 26, 27, 28, 29, 2A, 2B, 2C, 2D, 2E, 2F, 30, 31, 32, 33, 34, 35, 36, 37, 38, 39, 3A, 3B, 3C, 3D, 3E, 3F 00, 01, 02.
64	XXXXXX2E	2E, 2F, 30, 31, 32, 33, 34, 35, 36, 37, 38, 39, 3A, 3B, 3C, 3D, 3E, 3F, 00, 01, 02, 03, 04, 05, 06, 07, 08, 09, 0A, 0B, 0C, 0D, 0E, 0F, 10, 11, 12, 13, 14, 15, 16, 17, 18, 19, 1A, 1B, 1C, 1D, 1E, 1F, 20, 21, 22, 23, 24, 25, 26, 27, 28, 29, 2A, 2B, 2C, 2D.

5.8 Configuration Register 5 (CFR5x)

Configuration Register 5 controls the Octal SPI device behavior.

Table 54. Configuration Register 5

Bit Number	Name	Function	Read/Write N = Nonvolatile V = Volatile	Factory Default (binary)	Description
CFR5N[7] CFR5V[7]	RESRVD	Reserved for Future Use	N -> R/W V -> R/W	0	These bits are Reserved for future use. This bit must always be written/loaded to its default state.
CFR5N[6] CFR5V[6]	RESRVD	Reserved for Future Use	N -> R/W V -> R/W	1	
CFR5N[5:2] CFR5V[5:2]	RESRVD	Reserved for Future Use	N -> R/W V -> R/W	0000	
CFR5N[1] CFR5V[1]	SDRDDR	Octal SPI SDR or DDR selection	N -> R/W V -> R/W	0	Description: The SDRDDR bit selects between SDR or DDR for all data transfers to the device. Based on SDRDDR selection, all transactions either are SDR or DDR. Selection Options: 0 = SDR enabled 1 = DDR enabled Dependency: N/A
CFR5N[0] CFR5V[0]	OPI-IT	Octal Interface and Protocol Selection - I/O width set to 8 bits (8-8-8)	N -> R/W V -> R/W	0	Description: The OPI-IT bit selects the I/O width of the device to be 8-bits wide. When configured to 8-bits (OPI-IT) all transactions require Opcode, Address and Data always sent on all eight I/Os. Selection Options: 0 = Data Width set to 1 bit wide (1x) - Legacy Single SPI Protocol 1 = Data Width set to 8 wide (8x) - Octal Protocol Dependency: N/A

5.9 Interface CRC Enable Register (ICEV)

Interface CRC Enable Register controls the enabling/disabling of the Interface CRC function.

Table 55. Interface CRC Enable Register

Bit Number	Name	Function	Read/Write N = Nonvolatile V = Volatile	Factory Default (binary)	Description
ICEV[7:1]	RESVRD	Reserved for Future Use	V -> R	0000000	This bit is Reserved for future use. This bit must always be written/loaded to its default state.
ICEV[0]	ITCRCE	Interface CRC Selection	V -> R/W	0	Description: The ITCRCE bit controls enabling/disabling of the Interface CRC function. Selection Options: 0 = Interface CRC Enabled 1 = Interface CRC Disabled Dependency: N/A

5.10 Interface CRC Check-value Register (ICRV)

The Interface CRC Check-value Register (ICRV) stores the results of the CRC calculation on the command and Data Content over the interface for Protection.

Table 56. Interface CRC Check-value Register

Bit Number	Name	Function	Read/Write N = Nonvolatile V = Volatile	Factory Default (hex)	Description
ICRV[31:0]	ITCRCV[31:0]	Interface CRC Checksum Value	V -> R	0xFFFFFFFF	Description: The ITCRCV[31:0] bits store the check-value of the CRC process on the memory array data contained within the starting address and the ending address. Selection Options: Checksum Value Dependency: N/A

5.11 Memory Array Data Integrity Check CRC Register (DCRV)

The memory array Data Integrity Check CRC Register (DCRV) stores the results of the CRC calculation on the data contained between the specified starting and ending addresses.

Table 57. Memory Array Data Integrity Check CRC Register

Bit Number	Name	Function	Read/Write N = Nonvolatile V = Volatile	Factory Default (hex)	Description
DCRV[31:0]	DTCRCV[31:0]	Memory Array Data CRC Checksum Value	V -> R	0x00000000	Description: The DTCRCV[31:0 bits store the checksum value of the CRC process on the memory array data contained within the starting address and the ending address. Selection Options: Checksum Value Dependency: N/A

5.12 ECC Status Register (ESCV)

The ECC Status Register (ESCV) contains the ECC status of any error correction action performed on the unit data whose byte was addressed during last read.

Note Unit data is defined as the number of bytes over which the ECC is calculated. HL-T/HS-T family devices have a 16 bytes (128 bits) unit data.

Table 58. ECC Status Register

Bit Number	Name	Function	Read/Write N = Nonvolatile V = Volatile	Factory Default (binary)	Description
ECSV[7:5]	RESRVD	Reserved for Future Use	V -> R	000	This bit is Reserved for future use. This bit must always be written/loaded to its default state.
ECSV[4]	ECC2BT	ECC Error 2-bit Error Detection Flag	V -> R	0	Description: The ECC2BT bit indicates that a 2-bit ECC Error was detected in the data unit (16 bytes). A Clear ECC Status Register transaction (CLECC_0_0) will reset ECC2BT. **Note** ECC2BT is updated every time any memory address is read and is sticky, i.e. once it is set, it remains set. The ECC2BT status is maintained until a Clear ECC Status Register transaction (CLECC_0_0) is executed. **Note** ECC1BT is not valid if ECC2BT status flag is set. Selection Options: 0 = No 2-Bit ECC Error was detected in the data unit (16 bytes) 1 = 2-bit ECC Error was detected in the data unit (16 bytes) Dependency: N/A
ECSV[3]	ECC1BT	ECC Error 1-bit Error Detection and Correction Flag	V -> R	0	Description: The ECC1BT bit indicates that a 1-bit ECC Error was detected and corrected in the data unit (16 bytes). A Clear ECC Status Register transaction (CLECC_0_0) will reset ECC1BT. **Note** ECC1BT is updated every time any memory address is read and is sticky, i.e. once it is set, it remains set. The ECC1BT status is maintained until a Clear ECC Status Register transaction (CLECC_0_0) is executed. Selection Options: 0 = No 1-Bit ECC Error was detected in the data unit (16 bytes) 1 = 1-bit ECC Error was detected in the data unit (16 bytes) Dependency: N/A

Table 58. ECC Status Register (Continued)

Bit Number	Name	Function	Read/Write N = Nonvolatile V = Volatile	Factory Default (binary)	Description
ECSV[2:0]	RESRVD	Reserved for Future Use	V -> R	000	This bit is Reserved for future use. This bit must always be written/loaded to its default state.

5.13 ECC Address Trap Register (EATV)

The ECC Address Trap Register (EATV) stores the address of the ECC unit data where either a 1-Bit/2-Bit error or only a 1-Bit error occurred during a read operation. It stores the ECC unit address of the first ECC error captured during a memory read operation since the last Clear ECC transaction.

Table 59. ECC Address Trap Register

Bit Number	Name	Function	Read/Write N = Nonvolatile V = Volatile	Factory Default (hex)	Description
EATV[31:0]	ECCATP[31:0]	ECC 1-bit and 2-bit Error Address Trap Register	V -> R	0x00000000	Description: The Address Trap Register (ECCATP[31:0]) stores the ECC unit data address where a 1-Bit/2-Bit error occurred during a read operation. ECCATP[31:0] stores the ECC unit address of the first ECC error captured during a memory read operation since the last Clear ECC Status Register transaction (CLECC_0_0). **Note** ECCATP[31:0] is only updated during Read Instruction. **Note** Clear ECC Status Register transaction (CLECC_0_0), POR or Hardware/Software reset clears the EATV[31:0] to 0x00000000. Selection Options: ECC Error Data Unit Address Dependency: N/A

5.14 ECC Error Detection Count Register (ECTV)

The ECC Error Detection Counter Register (ECTV) stores the number of either 1-Bit/2-Bit or only 1-Bit ECC errors have occurred during read operations since the last POR or hardware/software reset.

Table 60. ECC Count Register

Bit Number	Name	Function	Read/Write N = Nonvolatile V = Volatile	Factory Default (hex)	Description
ECTV[15:0]	ECCCNT[15:0]	ECC 1-bit and 2-bit Error Count Register	V -> R	0x0000	Description: The ECCCNT[15:0] stores the number of 1-bit/2-bit ECC errors occurred during read operations since the last POR or hardware/software reset. **Note** ECCCNT[15:0] is only updated during Read Instruction. **Note** Only one ECC error is counted for each data unit. If multiple read transactions access the same unit data containing an ECC error, the ECCCNT[15:0] will increment each time the unit data is read. **Note** Once the count reaches 0xFFFF, theECCCNT[15:0] will stop incrementing **Note** POR or Hardware/Software reset clears the ECCNT[15:0] to 0x0000. Selection Options: ECC Error Count Dependency: N/A

5.15 Advanced Sector Protection Register (ASPO)

The ASP Register (ASPO) configures the behavior of Advanced Sector Protection scheme.

Table 61. Advanced Sector Protection Register

Bit Number	Name	Function	Read/Write N = Nonvolatile V = Volatile	Factory Default (binary)	Description
ASPO[15:6]	RESRVD	Reserved for Future Use	N -> R/1	1111111111	This bit is Reserved for future use. This bit must always be written/loaded to its default state.
ASPO[5]	ASPRDP	Read Password Based Protection Selection	N -> R/1	1	Description: The ASPRDP bit selects the Read Password Mode Protection mode. Read Password Protection mode works in conjunction with Password Protection mode to protect all sectors from Read/Erase/Program. Based on TBPROT configuration bit (CFR1x[5]), either the top or bottom sector is available for reading. Selection Options: 0 = Read Password Protection Mode is enabled 1 = Read Password Protection Mode is disabled Dependency: TBPROT (CFR1x[5])
ASPO[4]	ASPDYB	Dynamic Protection (DYB) for all sectors at power-up Selection	N -> R/1	1	Description: The ASPDYB bit selects whether all DYB bits (sectors) are in the protected state following power-up or hardware reset. DYB bits will individually need to be reset to change sector protections. Selection Options: 0 = DYB based sector protection enabled at power-up or hardware reset 1 = DYB based sector protection disabled at power-up or hardware reset Dependency: N/A
ASPO[3]	ASPPPB	Permanent Protection (PPB) bits for all sectors programmability Selection	N -> R/1	1	Description: The ASPPPB bit selects whether all PPB bits are one-time programmable making PPB sector protection permanent. **Note** ASPPPB disables PPB erase transaction (ERPPB_0_0). Selection Options: 0 = PPB bits are one-time programmable 1 = PPB bits can be erased and programmed as desired Dependency: N/A
ASPO[2]	ASPPWD	Password Based Protection Selection	N -> R/1	1	Description: The ASPPWD bit selects the Password Protection Mode. Password Protection mode protects all PPB bits, all registers and all memory from erase/program till the correct password is entered. The ASPPWD can also be used in combination with the ASPRDP to protect sectors from being read as well till the correct password is provided – except for top or bottom sector which is available for reading based on TBPROT configuration bit (CFR1x[5]). **Note** When ASPPAS is selected, ASPO[15:0] are protected against program operations. Selection Options: 0 = Password Protection Mode is enabled 1 = Password Protection Mode is disabled Dependency: N/A
ASPO[1]	ASPPER	Persistent Protection Selection (Register Protection Selection)	N -> R/1	1	Description: The ASPPER bit selects the Persistent Protection Mode. The Persistent Protection mode (ASPPER) protects the ASPO[15:0], CFR1x[6, 5, 4, 2] and CFR3x[3] registers from erase or program. Selection Options: 0 = Persistent Protection Mode is enabled 1 = Persistent Protection Mode is disabled Dependency: N/A
ASPO[0]	ASPPRM	Permanent Protection Selection	N -> R/1	1	Description: The ASPPRM bit selects the Permanent Protection Mode. The Permanent Protection mode (ASPPRM) permanently protects the PPB bits from erase or program. ASPPRM bit should be programmed once all the PPB based sector protections are finalized. **Note** Permanent protection is independent of the PPBLOCK bit. Selection Options: 0 = Permanent Protection Mode is enabled 1 = Permanent Protection Mode is disabled Dependency: N/A

5.16 ASP Password Register (PWDO)

The ASP Password Register (PWDO) is used to permanently define a password.

Table 62. Password Register

Bit Number	Name	Function	Read/Write N = Nonvolatile V = Volatile	Factory Default (hex)	Description
PWDO[63:0]	PASWRD[63:0]	Password Register	N -> R/1	0xFFFFFFFFFFFFFFFF	Description: The PASWRD[63:0] permanently stores a password used in password protected modes of operation. When the Password Protection Mode is enabled, this register will output the undefined data upon read password request. Selection Options: Password Dependency: N/A

5.17 ASP PPB Lock Register (PPLV)

The PPBLCK bit in the ASP PPB Lock Register (PPLV) is used to protect the PPB bits.

Table 63. ASP PPB Lock Register

Bit Number	Name	Function	Read/Write N = Nonvolatile V = Volatile	Factory Default (binary)	Description
PPLV[7:1]	RESVRD	Reserved for Future Use	V -> R	0000000	This bit is Reserved for future use. This bit must always be written/loaded to its default state.
PPLV[0]	PPBLCK	PPB Temporary Protection Selection	V -> R/W	1, ASPO[2:1]	Description: The PPBLCK bit is used to temporarily protect all the PPB bits. Selection Options: 1 = PPB Bits can be erased or programmed 0 = PPB bits are protected against erase or program till the next POR or hardware reset Dependency: N/A

5.18 ASP PPB Access Register (PPAV)

The ASP PPB Access Register (PPAV) is used to provide the state of each sector's PPB protection bit.

Table 64. ASP PPB Access Register

Bit Number	Name	Function	Read/Write N = Nonvolatile V = Volatile	Factory Default (binary)	Description
PPAV[7:0]	PPBACS[7:0]	Sector Based PPB Protection Status	N -> R/W	11111111	Description: The PPBACS[7:0] bits are used to provide the state of the individual sector's PPB bit. Selection Options: FF = PPB for the sector addressed by the Read PPB transaction (RDPPB_4_0) is 1, not protecting that sector from program or erase operations 00 = PPB for the sector addressed by the Read PPB transaction (RDPPB_4_0) is 0, protecting that sector from program or erase operations Dependency: N/A

5.19 ASP Dynamic Block Access Register (DYAV)

The ASP DYB Access Register (DYAV) is used to provide the state of each sector's DYB protection bit.

Table 65. ASP DYB Access Register

Bit Number	Name	Function	Read/Write N = Nonvolatile V = Volatile	Factory Default (binary)	Description
DYAV[7:0]	DYBACS[7:0]	Sector Based DYB Protection Status	V -> R/W	11111111	Description: The DYBACS[7:0] bits are used to provide the state of the individual sector's DYB bit. Selection Options: FF = DYB for the sector addressed by the Read DYB transaction (RDDYB_4_0) is 1, not protecting that sector from program or erase operations 00 = DYB for the sector addressed by the Read DYB transaction (RDDYB_4_0) is 0, protecting that sector from program or erase operations Dependency: N/A

5.20 AutoBoot Register (ATBN)

The AutoBoot Register (ATBN) provides a means to automatically read boot code as part of the power-on reset, or hardware reset process.

Table 66. AutoBoot Register

Bit Number	Name	Function	Read/Write N = Nonvolatile V = Volatile	Factory Default (binary)	Description
ATBN[31:9]	STADR[22:0]	Starting Address Selection where AutoBoot will start reading data from	N -> R/W	00000000000000000000000	Description: The STADR[22:0] bits set the starting address from which the device will output the read data. Selection Options: Address Bits Dependency: N/A
ATBN[8:1]	STDLY[7:0]	AutoBoot Read Starting Delay Selection	N -> R/W	00000000	Description: The STDLY[7:0] bits specify the initial delay (clock cycles) needed by the host before it can accept data. **Note** STDLY[7:0]=0x00 is valid for SPI up to 50 MHz. STDLY[7:0] = 0x01 or higher is valid for SPI up to 166 MHz. STDLY[7:0] = 0x05 or higher is valid for HL-T Octal up to 166 MHz and HS-T Octal up to 200 MHz. Selection Options: Address Bits Dependency: N/A
ATBN[0]	ATBTEN	AutoBoot Feature Selection	N -> R/W	0	Description: The ATBTEN bit enables or disables the AutoBoot feature. Selection Options: 0 = AutoBoot feature disabled 1 = AutoBoot feature enabled Dependency: N/A

5.21 Sector Erase Count Register (SECV)

The Sector Erase Count Register (SECV) contains the number of times the addressed sector has been erased.

Table 67. Sector Erase Count Register

Bit Number	Name	Function	Read/Write N = Nonvolatile V = Volatile	Factory Default (hex)	Description
SECV[23]	SECCPT	Sector Erase Count Corruption Status Flag	V -> R	0x0	Description: The SECCPT bit is used to determine if the reported sector erase count is corrupted and was reset. **Note** If SECCPT is set due to count corruption, it will reset to 0 on the next successful erase operation on the selected sector. Selection Options: 0 = Sector Erase Count is not corrupted and is valid 1 = Sector Erase Count is corrupted and is not valid Dependency: N/A
SECV[22:0]	SECVAL[22:0]	Sector Erase Count Value	V -> R	0x000000	Description: The SECVAL[22:0] bits store the number of times a sector has been erased Selection Options: Value Dependency: N/A

5.22 INT# Pin Configuration Register (INCV) - Octal Only

The INT# pin Configuration Register (INCV) configures which internal event will trigger a HIGH to LOW transition on the INT# output pin.

Note When INCV disables a particular feature from driving the INT# pin, it will prevent the corresponding INSV bit(s) from being updated.

Note Clearing a bit within INCV has no effect on INSV, and it is a system responsibility to independently clear the INSV as required.

Table 68. Interrupt Configuration Register

Bit Number	Name	Function	Read/Write N = Nonvolatile V = Volatile	Factory Default (binary)	Description
INCV[7]	INTBEN	INT# pin Enable Selection	V -> R/W	1	Description: The INT# pin is an open-drain output used to indicate to the host system that an event has occurred within the memory device. The INTBEN bit enables or disables the functionality controlling INT# pin. Selection Options: 0 = INT# pin functionality is enabled 1 = INT# pin functionality is disabled Dependency: N/A
INCV[6:5]	RESRVD	Reserved for Future Use	V -> R/W	11	These bits are Reserved for future use. This bit must always be written/ loaded to its default state.
INCV[4]	REYBSY	Ready/Busy Transition Selection	V -> R/W	1	Description: The REYBSY bit enables or disables whether device ready/ busy state will transition INT#. Selection Options: 0 = A Busy to Ready transition will cause a HIGH to LOW transition on the INT# output 1 = Ready/Busy transitions will not transition the INT# output Dependency: N/A
INCV[3:2]	RESRVD	Reserved for Future Use	V -> R/W	11	These bits are Reserved for future use. This bit must always be written/ loaded to its default state.
INCV[1]	ECC2BT	ECC 2-bit Error Detection Selection0	V -> R/W	1	Description: The ECC2BT bit enables or disables whether a 2-bit ECC detection error will transition INT#. Selection Options: 0 = 2-bit ECC detection will cause a HIGH to LOW transition the INT# output 1 = 2-bit ECC detection will not transition the INT# output Dependency: N/A

Table 68. Interrupt Configuration Register (Continued)

Bit Number	Name	Function	Read/Write N = Nonvolatile V = Volatile	Factory Default (binary)	Description
INCV[0]	ECC1BT	ECC 1-bit Error Detection and Correction Selection	V -> R/W	1	Description: The ECC1BT bit enables or disables whether a 1-bit ECC detection and correction error will transition INT#. Selection Options: 0 = 1-bit ECC detection and correction will cause a HIGH to LOW transition the INT# output 1 = 1-bit ECC detection and correction will not transition the INT# output Dependency: N/A

5.23 INT# Pin Status Register (INSV) - Octal Only

The INT# Pin Status Register (INSV) indicates which internal event(s) has occurred since the last time the ISR was cleared.

Table 69. Interrupt Status Register

Bit Number	Name	Function	Read/Write N = Nonvolatile V = Volatile	Factory Default (binary)	Description
INSV[7:5]	RESRVD	Reserved for Future Use	V -> R/W	111	These bits are Reserved for future use. This bit must always be written/ loaded to its default state.
INSV[4]	REYBSY	Ready/Busy Transition	V -> R/W	1	Description: The REYBSY bit indicates whether the device's ready/busy status has caused a transition on INT#. Selection Options: 0 = A Busy to Ready transition has occurred 1 = A Busy to Ready transition has not occurred Dependency: N/A
INSV[3:2]	RESRVD	Reserved for Future Use	V -> R/W	11	These bits are Reserved for future use. This bit must always be written/ loaded to its default state.
INSV[1]	ECC2BT	ECC 2-bit Error Detection	V -> R/W	1	Description: The ECC2BT bit indicates whether a 2-bit ECC detection error has caused a transition on INT#. Selection Options: 0 = 2-bit error detection has occurred 1 = 2-bit error detection has not occurred Dependency: N/A
INSV[0]	ECC1BT	ECC 1-bit Error Detection and Correction	V -> R/W	1	Description: The ECC1BT bit indicates whether a 1-bit ECC correction error has caused a transition on INT#. Selection Options: 0 = 1-bit error correction has occurred 1 = 1-bit error correction has not occurred Dependency: N/A

5.24 EnduraFlex Architecture Selection Register (EFXx)

The EnduraFlex Architecture Selection registers (EFXx) define the long retention / high endurance regions based on a four pointer based architecture.

Table 70. EnduraFlex Architecture Selection Register (Pointer 4)

Bit Number	Name	Function	Read/Write N = Nonvolatile V = Volatile	Factory Default (binary)	Description
EFX4O[10:2]	EPTAD4[8:0]	EnduraFlex Pointer 4 Address Selection	N -> R/1	111111111	Description: The EPTAD4[8:0] bits define the 9-bit address of the beginning sector from where the long retention / high endurance region is defined. Selection Options: Pointer Address Dependency: N/A
EFX4O[1]	ERGNT4	EnduraFlex Pointer 4 based Region Type Selection	N -> R/1	1	Description: The ERGNT4 bit defines whether the region is long retention or high endurance. Selection Options: 0 = Long Retention Sectors 1 = High Endurance Sectors Dependency: N/A
EFX4O[0]	EPTEB4	EnduraFlex Pointer 4 Enable# Selection	N -> R/1	1	Description: The EPTEN4 bit define whether the wear leveling pointer is enabled/disabled. Selection Options: 0 = Pointer Address Enabled 1 = Pointer Address Disabled Dependency: N/A

Table 71. EnduraFlex Architecture Selection Register (Pointer 3)

Bit Number	Name	Function	Read/Write N = Nonvolatile V = Volatile	Factory Default (binary)	Description
EFX3O[10:2]	EPTAD3[8:0]	EnduraFlex Pointer 3 Address Selection	N -> R/1	111111111	Description: The EPTAD3[8:0] bits define the 9-bit address of the beginning sector from where the long retention / high endurance region is defined. Selection Options: Pointer Address Dependency: N/A
EFX3O[1]	ERGNT3	EnduraFlex Pointer 3 based Region Type Selection	N -> R/1	1	Description: The ERGNT3 bit defines whether the region is long retention or high endurance. Selection Options: 0 = Long Retention Sectors 1 = High Endurance Sectors Dependency: N/A
EFX3O[0]	EPTEB3	EnduraFlex Pointer 3 Enable# Selection	N -> R/1	1	Description: The EPTEN3 bit define whether the wear leveling pointer is enabled/disabled. Selection Options: 0 = Pointer Address Enabled 1 = Pointer Address Disabled Dependency: N/A

Table 72. EnduraFlex Architecture Selection Register (Pointer 2)

Bit Number	Name	Function	Read/Write N = Nonvolatile V = Volatile	Factory Default (binary)	Description
EFX2O[10:2]	EPTAD2[8:0]	EnduraFlex Pointer 2 Address Selection	N -> R/1	111111111	Description: The EPTAD2[8:0] bits define the 9-bit address of the beginning sector from where the long retention / high endurance region is defined. Selection Options: Pointer Address Dependency: N/A
EFX2O[1]	ERGNT2	EnduraFlex Pointer 2 based Region Type Selection	N -> R/1	1	Description: The ERGNT2 bit defines whether the region is long retention or high endurance. Selection Options: 0 = Long Retention Sectors 1 = High Endurance Sectors Dependency: N/A
EFX2O[0]	EPTEB2	EnduraFlex Pointer 2 Enable# Selection	N -> R/1	1	Description: EPTEN2 bit define whether the wear leveling pointer is enabled/disabled. Selection Options: 0 = Pointer Address Enabled 1 = Pointer Address Disabled Dependency: N/A

Table 73. EnduraFlex Architecture Selection Register (Pointer 1)

Bit Number	Name	Function	Read/Write N = Nonvolatile V = Volatile	Factory Default (binary)	Description
EFX1O[10:2]	EPTAD1[8:0]	EnduraFlex Pointer 1 Address Selection	N -> R/1	111111111	Description: The EPTAD1[8:0] bits define the 9-bit address of the beginning sector from where the long retention / high endurance region is defined. Selection Options: Pointer Address Dependency: N/A
EFX1O[1]	ERGNT1	EnduraFlex Pointer 1 based Region Type Selection	N -> R/1	1	Description: The ERGNT1 bit defines whether the region is long retention or high endurance. Selection Options: 0 = Long Retention Sectors 1 = High Endurance Sectors Dependency: N/A
EFX1O[0]	EPTEB1	EnduraFlex Pointer 1 Enable# Selection	N -> R/1	1	Description: The EPTEN1 bit define whether the wear leveling pointer is enabled/disabled. Selection Options: 0 = Pointer Address Enabled 1 = Pointer Address Disabled Dependency: N/A

Table 74. EnduraFlex Architecture Selection Register (Pointer 0)

Bit Number	Name	Function	Read/Write N = Nonvolatile V = Volatile	Factory Default (binary)	Description
EFX0O[1]	GBLSEL	All Sectors based Region type Selection	N -> R/1	1	Description: The GBLSEL bit defines whether all sectors are defined as long retention region or high endurance region. **Note** If all other pointer registers are disabled, this bit defines the behavior of the entire memory space and is hardwired to start at Sector 0. Selection Options: 0 = Long Retention Sectors 1 = High Endurance Sectors Dependency: N/A
EFX0O[0]	WRLVEN	Wear Leveling Enable Selection	N -> R/1	1	Description: The WRLVEN bit enables/disables the wear leveling feature. Selection Options: 0 = Wear Leveling Disabled 1 = Wear Leveling Enabled Dependency: N/A

6. Transaction Table

6.1 SPI (1S-1S-1S) Transaction Table

Table 75. SPI (1S-1S-1S) Transaction Table

Function	Transaction Name	Description	Prerequisite Transaction	Byte 1 (Hex)	Byte 2 (Hex)	Byte 3 (Hex)	Byte 4 (Hex)	Byte 5 (Hex)	Byte 6 (Hex)	Byte 7 (Hex)	Byte 8 (Hex)	Byte 9 (Hex)	Transaction Format	Max Frequency (MHz)	Address Length
Read Device ID	RDIDN_0_0	**Read manufacturer and device identification** transaction provides read access to manufacturer and device identification.	–	9F (CMD)	–	–	–	–	–	–	–	–	Figure 11	166	N/A
	RSFDP_3_0	**Read JEDEC Serial Flash Discoverable Parameters** transaction sequentially accesses the Serial Flash Discovery Parameters (SFDP).	–	5A (CMD)	ADDR [23:16]	ADDR [15:8]	ADDR [7:0]	–	–	–	–	–	Figure 12	156	3
	RDUID_0_0	**Read Unique ID** accesses a factory programmed 64-bit number which is unique to each device.	–	4C (CMD)	–	–	–	–	–	–	–	–	Figure 11	166	N/A
Register Access	RDSR1_0_0	**Read Status Register 1** transaction allows the Status Register 1 contents to be read from DQ1/SO.	–	05 (CMD)	–	–	–	–	–	–	–	–			
	RDSR2_0_0	**Read Status Register-2** transaction allows the Status Register-2 contents to be read from DQ1/SO.	–	07 (CMD)	–	–	–	–	–	–	–	–			
	RDARG_C_0	**Read Any Register** transaction provides a way to read all addressed nonvolatile and volatile device registers.	–	65 (CMD)	ADDR [23:16]	ADDR [15:8]	ADDR [7:0]	–	–	–	–	–	Figure 12		3
			–		ADDR [31:24]	ADDR [23:16]	ADDR [15:8]	ADDR [7:0]	–	–	–	–			4
	WRENB_0_0	**Write Enable** sets the Write Enable Latch bit of the Status Register 1 to 1 to enable write, program and erase transactions.	–	06 (CMD)	–	–	–	–	–	–	–	–	Figure 6		N/A
	WRDIS_0_0	**Write Disable** sets the Write Enable Latch bit of the Status Register 1 to 0 to disable write, program and erase transactions execution.	–	04 (CMD)	–	–	–	–	–	–	–	–			
	WRARG_C_1	**Write Any Register** transaction provides a way to write all addressed nonvolatile and volatile device registers.	WRENB_0_0	71 (CMD)	ADDR [23:16]	ADDR [15:8]	ADDR [7:0]	Input Data [7:0]	–	–	–	–	Figure 9		3
					ADDR [31:24]	ADDR [23:16]	ADDR [15:8]	ADDR [7:0]	Input Data [7:0]	–	–	–			4
	CLPEF_0_0	**Clear Program and Erase Failure Flags** transaction resets STR1V[5] (Erase failure flag) and STR1V[6] (Program failure flag).	WRENB_0_0	82 (CMD)	–	–	–	–	–	–	–	–	Figure 6		N/A
ECC	RDECC_4_0	**Read ECC Status** is used to determine the ECC status of the addressed data unit.	–	19 (CMD)	ADDR [31:24]	ADDR [23:16]	ADDR [15:8]	ADDR [7:0]	–	–	–	–	Figure 12		4
	CLECC_0_0	**Clear ECC Status Register** transaction resets ECC Status Register bit[4] (2-bit ECC Detection), ECC Status Register bit[3] (1-bit ECC Correction), Address Trap Register and ECC Detection Counter.	WRENB_0_0	1B (CMD)	–	–	–	–	–	–	–	–	Figure 6		N/A
CRC	DICHK_4_1	**Data Integrity Check** transaction causes the device to perform a Data Integrity Check over a user defined address range.	–	5B (CMD)	Start ADDR [31:24]	Start ADDR [23:16]	Start ADDR [15:8]	Start ADDR [7:0]	End ADDR [31:24]	End ADDR [23:16]	End ADDR [15:8]	End ADDR [7:0]	Figure 8		4

Table 75. SPI (1S-1S-1S) Transaction Table (Continued)

Function	Transaction Name	Description	Prerequisite Transaction	Byte 1 (Hex)	Byte 2 (Hex)	Byte 3 (Hex)	Byte 4 (Hex)	Byte 5 (Hex)	Byte 6 (Hex)	Byte 7 (Hex)	Byte 8 (Hex)	Byte 9 (Hex)	Transaction Format	Max Frequency (MHz)	Address Length
Read Flash Array	RDAY1_C_0	**Read** transaction reads out the memory contents at the given address. The maximum CK frequency for this transaction is 50 MHz frequency.	–	03 (CMD)	ADDR [23:16]	ADDR [15:8]	ADDR [7:0]	–	–	–	–	–	Figure 13	50	3
			–		ADDR [31:24]	ADDR [23:16]	ADDR [15:8]	ADDR [7:0]	–	–	–	–			4
	RDAY1_4_0		–	13 (CMD)	ADDR [31:24]	ADDR [23:16]	ADDR [15:8]	ADDR [7:0]	–	–	–	–			
	RDAY2_C_0	**Read Fast** transaction reads out the memory contents at the given address. The maximum CK frequency for this transaction is 166 MHz frequency.	–	0B (CMD)	ADDR [23:16]	ADDR [15:8]	ADDR [7:0]	–	–	–	–	–	Figure 12	166	3
			–		ADDR [31:24]	ADDR [23:16]	ADDR [15:8]	ADDR [7:0]	–	–	–	–			4
Program Flash Array	PRPGE_4_1	**Program Page** programs 256B or 512B data to the memory array in one transaction.	WRENB_0_0	12 (CMD)	ADDR [31:24]	ADDR [23:16]	ADDR [15:8]	ADDR [7:0]	Input Data 1 [7:0]	Input Data 2 [7:0]	(Continue)	–	Figure 9		
Erase Flash Array	ER004_4_0	**Erase 4-KB Sector** transaction sets all the bits of a 4 KB sector to 1 (all bytes are FFh).	WRENB_0_0	21 (CMD)	ADDR [31:24]	ADDR [23:16]	ADDR [15:8]	ADDR [7:0]	–	–	–	–	Figure 7		
	ER256_4_0	**Erase 256-KB Sector** transaction sets all the bits of a 256 KB sector to 1 (all bytes are FFh).	WRENB_0_0	DC (CMD)	ADDR [31:24]	ADDR [23:16]	ADDR [15:8]	ADDR [7:0]	–	–	–	–			
	ERCHP_0_0	**Erase Chip** transaction sets all bits to 1 (all bytes are FFh) inside the entire flash memory array.	WRENB_0_0	60 or C7 (CMD)	–	–	–	–	–	–	–	–	Figure 6		N/A
	EVERS_4_0	**Evaluate Erase Status** transaction verifies that the last erase operation on the addressed sector was completed successfully.	–	D0 (CMD)	ADDR [31:24]	ADDR [23:16]	ADDR [15:8]	ADDR [7:0]	–	–	–	–	Figure 7		4
	SEERC_4_0	**Sector Erase Count** transaction outputs the number of erase cycles for the sector of the inputed address from the Sector Erase Count Register.	–	5D (CMD)	ADDR [31:24]	ADDR [23:16]	ADDR [15:8]	ADDR [7:0]	–	–	–	–	Figure 12		
Suspend / Resume	SPEPD_0_0	**Suspend Erase / Program / Data Integrity Check** transaction allows the system to interrupt a programming, erase or data integrity check operation.	–	B0 (CMD)	–	–	–	–	–	–	–	–	Figure 6		N/A
	RSEPD_0_0	**Resume Erase / Program / Data Integrity Check** transaction allows the system to resume a programming, erase or data integrity check operation.	–	30 (CMD)	–	–	–	–	–	–	–	–			
Secure Silicon Region	PRSSR_4_1	**Program Secure Silicon Region** transaction programs data in 1024 bytes of Secure Silicon Region.	WRENB_0_0	42 (CMD)	ADDR [31:24]	ADDR [23:16]	ADDR [15:8]	ADDR [7:0]	Input Data 1 [7:0]	Input Data 2 [7:0]	(Continue)	–	Figure 9		4
	RDSSR_4_0	**Read Secure Silicon Region** transaction reads data from the SSR.	–	4B (CMD)	ADDR [31:24]	ADDR [23:16]	ADDR [15:8]	ADDR [7:0]	–	–	–	–	Figure 12		

Table 75. SPI (1S-1S-1S) Transaction Table (Continued)

Function	Transaction Name	Description	Prerequisite Transaction	Byte 1 (Hex)	Byte 2 (Hex)	Byte 3 (Hex)	Byte 4 (Hex)	Byte 5 (Hex)	Byte 6 (Hex)	Byte 7 (Hex)	Byte 8 (Hex)	Byte 9 (Hex)	Transaction Format	Max Frequency (MHz)	Address Length
Advanced Sector Protection	RDDYB_4_0	**Read Dynamic Protection Bit** transaction reads the contents of the DYB Access Register.	–	E0 (CMD)	ADDR [31:24]	ADDR [23:16]	ADDR [15:8]	ADDR [7:0]	–	–	–	–	Figure 12	166	4
	WRDYB_4_1	**Write Dynamic Protection Bit** transaction writes to the DYB Access Register.	WRENB_0_0	E1 (CMD)	ADDR [31:24]	ADDR [23:16]	ADDR [15:8]	ADDR [7:0]	Input Data [7:0]	–	–	–	Figure 9		
	RDPPB_4_0	**Read Persistent Protection Bit** transaction reads the contents of the PPB Access Register.	–	E2 (CMD)	ADDR [31:24]	ADDR [23:16]	ADDR [15:8]	ADDR [7:0]	–	–	–	–	Figure 12		
	PRPPB_4_0	**Program Persistent Protection Bit** transaction programs / writes the PPB Register to enable the sector protection.	WRENB_0_0	E3 (CMD)	ADDR [31:24]	ADDR [23:16]	ADDR [15:8]	ADDR [7:0]	–	–	–	–	Figure 7		
	ERPPB_0_0	**Erase Persistent Protection Bit** transaction sets all persistent protection bits to 1.	WRENB_0_0	E4 (CMD)	–	–	–	–	–	–	–	–	Figure 6		N/A
	WRPLB_0_0	**Write PPB Protection Lock Bit** transaction clears the PPB Lock to 0.	–	A6 (CMD)	–	–	–	–	–	–	–	–			
	RDPLB_0_0	**Read Password Protection Mode Lock Bit** transaction shifts out the 8-bit PPB Lock Register contents with MSb first.	WRENB_0_0	A7 (CMD)	–	–	–	–	–	–	–	–	Figure 11		
	PWDUL_0_1	**Password Unlock** transaction sends the 64-bit password to flash device. If the supplied password does not match the hidden password in the Password Register, the device is locked and only a hardware reset or POR will return the device to standby state, ready for new transactions such as a retry of the PWDUL_0_1. If the password does match, the PPB Lock bit is set to 1.	–	E9 (CMD)	Password [7:0]	Password [15:8]	Password [23:16]	Password [31:24]	Password [39:32]	Password [47:40]	Password [55:48]	Password [63:56]	Figure 10		
Reset	SRSTE_0_0	**Software Reset Enable** command is required immediately before a SFRST_0_0 transaction.	–	66 (CMD)	–	–	–	–	–	–	–	–	Figure 6		
	SFRST_0_0	**Software Reset** transaction restores the device to its initial power up state, by reloading volatile registers from nonvolatile default values.	SRSTE_0_0	99 (CMD)	–	–	–	–	–	–	–	–			
Deep Power Down	ENDPD_0_0	**Enter Deep Power Down Mode** transaction shifts device in the lowest power consumption mode.	–	B9 (CMD)	–	–	–	–	–	–	–	–			

6.2 Octal (8S-8S-8S, 8D-8D-8D) Transaction Table

Table 76. Octal (8S-8S-8S, 8D-8D-8D) Transaction Table

Function	Transaction Name	Description	Prerequisite Transaction	Byte 1 (Hex) CK ↑ Edge[31]	Byte 2 (Hex) CK ↓ Edge[31]	Byte 3 (Hex) CK ↑ Edge[31]	Byte 4 (Hex) CK ↓ Edge[31]	Byte 5 (Hex) CK ↑ Edge[31]	Byte 6 (Hex) CK ↓ Edge[31]	Byte 7 (Hex) CK ↑ Edge[31]	Byte 8 (Hex) CK ↓ Edge[31]	Byte 9 (Hex) CK ↑ Edge[31]	Byte 10 (Hex) CK ↓ Edge[31]	Byte 11 (Hex) CK ↑ Edge[31]	Byte 12 (Hex) CK ↓ Edge[31]	Byte 13 (Hex) CK ↑ Edge[31]	Byte 14 (Hex) CK ↓ Edge[31]	Transaction Format (SDR/DDR)	HL-T / HS-T Max Frequency (MHz)	Address Length
Read Device ID	RDIDN_4_0	**Read manufacturer and device identification** transaction provides read access to manufacturer and device identification.	–	9F (CMD)	9F (CMD)	00 (ADDR)	00 (ADDR)	00 (ADDR)	00 (ADDR)	–	–	–	–	–	–	–	–	Figure 24 / Figure 25	166/ 200	4
	RSFDP_4_0	**Read JEDEC Serial Flash Discoverable Parameters** transaction sequentially accesses the Serial Flash Discovery Parameters (SFDP).	–	5A (CMD)	5A (CMD)	ADDR [31:24]	ADDR [23:16]	ADDR [15:8]	ADDR [7:0]	–	–	–	–	–	–	–	–		92 (SDR) / 85 (DDR)	
	RDUID_4_0	**Read Unique ID** accesses a factory programmed 64-bit number which is unique to each device.	–	4C (CMD)	4C (CMD)	00 (ADDR)	00 (ADDR)	00 (ADDR)	00 (ADDR)	–	–	–	–	–	–	–	–			
Register Access	RDSR1_4_0	**Read Status Register 1** transaction allows the Status Register 1 contents to be read from DQ[7:0]	–	05 (CMD)	05 (CMD)	00 (ADDR)	00 (ADDR)	00 (ADDR)	00 (ADDR)	–	–	–	–	–	–	–	–	Figure 24 / Figure 26		
	RDSR2_4_0	**Read Status Register-2** transaction allows the Status Register-2 contents to be read from DQ[7:0]	–	07 (CMD)	07 (CMD)	00 (ADDR)	00 (ADDR)	00 (ADDR)	00 (ADDR)	–	–	–	–	–	–	–	–			
	RDARG_4_0	**Read Any Register** transaction provides a way to read all addressed nonvolatile and volatile device registers.	–	65 (CMD)	65 (CMD)	ADDR [31:24]	ADDR [23:16]	ADDR [15:8]	ADDR [7:0]	–	–	–	–	–	–	–	–	Figure 24 / Figure 25		
	WRENB_0_0	**Write Enable** sets the Write Enable Latch bit of the Status Register 1 to 1 to enable write, program and erase transactions.	–	06 (CMD)	06 (CMD)	–	–	–	–	–	–	–	–	–	–	–	–	Figure 15 / Figure 16	166/ 200	N/A
	WRDIS_0_0	**Write Disable** sets the Write Enable Latch bit of the Status Register 1 to 0 to disable write, program and erase transactions execution.	–	04 (CMD)	04 (CMD)	–	–	–	–	–	–	–	–	–	–	–	–			
	WRARG_4_1	**Write Any Register** transaction provides a way to write all addressed nonvolatile and volatile device registers.	WRENB_0_0	71 (CMD)	71 (CMD)	ADDR [31:24]	ADDR [23:16]	ADDR [15:8]	ADDR [7:0]	Input Data [7:0]	–	–	–	–	–	–	–	Figure 21 / Figure 22		4
	CLPEF_0_0	**Clear Program and Erase Failure Flags** transaction resets STR1V[5] (Erase failure flag) and STR1V[6] (Program failure flag)	WRENB_0_0	82 (CMD)	82 (CMD)	–	–	–	–	–	–	–	–	–	–	–	–	Figure 15 / Figure 16		N/A
ECC	RDECC_4_0	**Read ECC Status** is used to determine the ECC status of the addressed data unit.	–	19 (CMD)	19 (CMD)	ADDR [31:24]	ADDR [23:16]	ADDR [15:8]	ADDR [7:0]	–	–	–	–	–	–	–	–	Figure 24 / Figure 26		4
	CLECC_0_0	**Clear ECC Status Register** transaction resets ECC Status Register bit[4] (2-bit ECC Detection), ECC Status Register bit[3] (1-bit ECC Correction), Address Trap Register and ECC Detection Counter.	WRENB_0_0	1B (CMD)	1B (CMD)	–	–	–	–	–	–	–	–	–	–	–	–	Figure 15 / Figure 16		N/A

Note
31. In case of Octal DDR protocol.

Table 76. Octal (8S-8S-8S, 8D-8D-8D) Transaction Table (Continued)

Function	Transaction Name	Description	Prerequisite Transaction	Byte 1 (Hex)	Byte 2 (Hex)	Byte 3 (Hex)	Byte 4 (Hex)	Byte 5 (Hex)	Byte 6 (Hex)	Byte 7 (Hex)	Byte 8 (Hex)	Byte 9 (Hex)	Byte 10 (Hex)	Byte 11 (Hex)	Byte 12 (Hex)	Byte 13 (Hex)	Byte 14 (Hex)	Transaction Format (SDR/DDR)	HL-T / HS-T Max Frequency (MHz)	Address Length
				CK ↑ Edge[31]	CK ↓ Edge[31]	CK ↑ Edge[31]	CK ↓ Edge[31]	CK ↑ Edge[31]	CK ↓ Edge[31]	CK ↑ Edge[31]	CK ↓ Edge[31]	CK ↑ Edge[31]	CK ↓ Edge[31]	CK ↑ Edge[31]	CK ↓ Edge[31]	CK ↑ Edge[31]	CK ↓ Edge[31]			
CRC	RDCRC_4_0	**Read Interface CRC Register** transaction allows the volatile Interface CRC Register contents to be read	–	64 (CMD)	64 (CMD)	00 (ADDR)	00 (ADDR)	00 (ADDR)	00 (ADDR)	–	–	–	–	–	–	–	–	Figure 24 / Figure 25	166 / 200	4
	DICHK_4_1	**Data Integrity Check** transaction causes the device to perform a Data Integrity Check over a user defined address range.	–	5B (CMD)	5B (CMD)	00 (ADDR)	00 (ADDR)	00 (ADDR)	00 (ADDR)	Start ADDR [31:24]	Start ADDR [23:16]	Start ADDR [15:8]	Start ADDR [7:0]	End ADDR [31:24]	End ADDR [23:16]	End ADDR [15:8]	End ADDR [7:0]	Figure 19 / Figure 20		
Read Flash Array	RDAY1_4_0	**Read Octal SDR** transaction reads out the memory contents at the given address on DQ[7:0]. The maximum CK frequency for this SDR transaction is 200-MHz frequency	–	EC (CMD)	EC (CMD)	ADDR [31:24]	ADDR [23:16]	ADDR [15:8]	ADDR [7:0]	–	–	–	–	–	–	–	–	Figure 24		
	RDAY2_4_0	**Read Octal DDR** transaction reads out the memory contents at the given address on DQ[7:0]. The maximum CK frequency for this DDR transaction is 200-MHz frequency	–	EE (CMD)	EE (CMD)	ADDR [31:24]	ADDR [23:16]	ADDR [15:8]	ADDR [7:0]	–	–	–	–	–	–	–	–	Figure 25		
Program Flash Array	PRPGE_4_1	**Program Page** programs 256B or 512B data to the memory array in one transaction.	WRENB_0_0	12 (CMD)	12 (CMD)	ADDR [31:24]	ADDR [23:16]	ADDR [15:8]	ADDR [7:0]	Input Data 1 [7:0]	Input Data 2 [7:0]	(Continue)	–	–	–	–	–	Figure 21 / Figure 22		
Erase Flash Array	ER004_4_0	**Erase 4-KB Sector** transaction sets all the bits of a 4 KB sector to 1 (all bytes are FFh).	WRENB_0_0	21 (CMD)	21 (CMD)	ADDR [31:24]	ADDR [23:16]	ADDR [15:8]	ADDR [7:0]	–	–	–	–	–	–	–	–	Figure 17 / Figure 18		
	ER256_4_0	**Erase 256-KB Sector** transaction sets all the bits of a 256 KB sector to 1 (all bytes are FFh).	WRENB_0_0	DC (CMD)	DC (CMD)	ADDR [31:24]	ADDR [23:16]	ADDR [15:8]	ADDR [7:0]	–	–	–	–	–	–	–	–			
	ERCHP_0_0	**Erase Chip** transaction sets all bits to 1 (all bytes are FFh) inside the entire flash memory array.	WRENB_0_0	60 or C7 (CMD)	60 or C7 (CMD)	–	–	–	–	–	–	–	–	–	–	–	–	Figure 15 / Figure 16		N/A
	EVERS_4_0	**Evaluate Erase Status** transaction verifies that the last erase operation on the addressed sector was completed successfully.	–	D0 (CMD)	D0 (CMD)	ADDR [31:24]	ADDR [23:16]	ADDR [15:8]	ADDR [7:0]	–	–	–	–	–	–	–	–	Figure 17 / Figure 18		4
	SEERC_4_0	**Sector Erase Count** transaction outputs the number of erase cycles for the sector of the inputed address from the Sector Erase Count Register.	–	5D (CMD)	5D (CMD)	ADDR [31:24]	ADDR [23:16]	ADDR [15:8]	ADDR [7:0]	–	–	–	–	–	–	–	–			
Suspend / Resume	SPEPD_0_0	**Suspend Erase / Program / Data Integrity Check** transaction allows the system to interrupt a programming, erase or data integrity check operation	–	B0 (CMD)	B0 (CMD)	–	–	–	–	–	–	–	–	–	–	–	–	Figure 15 / Figure 16		N/A
	RSEPD_0_0	**Resume Erase / Program / Data Integrity Check** transaction allows the system to resume a programming, erase or data integrity check operation	–	30 (CMD)	30 (CMD)	–	–	–	–	–	–	–	–	–	–	–	–			

Note
31. In case of Octal DDR protocol.

Table 76. Octal (8S-8S-8S, 8D-8D-8D) Transaction Table (Continued)

Function	Transaction Name	Description	Prerequisite Transaction	Byte 1 (Hex)	Byte 2 (Hex)	Byte 3 (Hex)	Byte 4 (Hex)	Byte 5 (Hex)	Byte 6 (Hex)	Byte 7 (Hex)	Byte 8 (Hex)	Byte 9 (Hex)	Byte 10 (Hex)	Byte 11 (Hex)	Byte 12 (Hex)	Byte 13 (Hex)	Byte 14 (Hex)	Transaction Format (SDR/DDR)	HL-T / HS-T Max Frequency (MHz)	Address Length
				CK ↑ Edge[31]	CK ↓ Edge[31]	CK ↑ Edge[31]	CK ↓ Edge[31]	CK ↑ Edge[31]	CK ↓ Edge[31]	CK ↑ Edge[31]	CK ↓ Edge[31]	CK ↑ Edge[31]	CK ↓ Edge[31]	CK ↑ Edge[31]	CK ↓ Edge[31]	CK ↑ Edge[31]	CK ↓ Edge[31]			
Secure Silicon Region	PRSSR_4_1	**Program Secure Silicon Region** transaction programs data in 1024 bytes of Secure Silicon Region	WRENB_0_0	42 (CMD)	42 (CMD)	ADDR [31:24]	ADDR [23:16]	ADDR [15:8]	ADDR [7:0]	Input Data 1 [7:0]	Input Data 2 [7:0]	(Continue)	–	–	–	–	–	Figure 21 / Figure 22	166 / 200	4
	RDSSR_4_0	**Read Secure Silicon Region** transaction reads data from the SSR.	–	4B (CMD)	4B (CMD)	ADDR [31:24]	ADDR [23:16]	ADDR [15:8]	ADDR [7:0]	–	–	–	–	–	–	–	–	Figure 24 / Figure 25		
Advanced Sector Protection	RDDYB_4_0	**Read Dynamic Protection Bit** transaction reads the contents of the DYB Access Register.	–	E0 (CMD)	E0 (CMD)	ADDR [31:24]	ADDR [23:16]	ADDR [15:8]	ADDR [7:0]	–	–	–	–	–	–	–	–	Figure 24 / Figure 26		4
	WRDYB_4_1	**Write Dynamic Protection Bit** transaction writes to the DYB Access Register	WRENB_0_0	E1 (CMD)	E1 (CMD)	ADDR [31:24]	ADDR [23:16]	ADDR [15:8]	ADDR [7:0]	Input Data [7:0]	–	–	–	–	–	–	–	Figure 21 / Figure 23		
	RDPPB_4_0	**Read Persistent Protection Bit** transaction reads the contents of the PPB Access Register	–	E2 (CMD)	E2 (CMD)	ADDR [31:24]	ADDR [23:16]	ADDR [15:8]	ADDR [7:0]	–	–	–	–	–	–	–	–	Figure 24 / Figure 26		
	PRPPB_4_0	**Program Persistent Protection Bit** transaction programs / writes the PPB Register to enable the sector protection.	WRENB_0_0	E3 (CMD)	E3 (CMD)	ADDR [31:24]	ADDR [23:16]	ADDR [15:8]	ADDR [7:0]	–	–	–	–	–	–	–	–	Figure 17 / Figure 18		
	ERPPB_0_0	**Erase Persistent Protection Bit** transaction sets all persistent protection bits to 1.	WRENB_0_0	E4 (CMD)	E4 (CMD)	–	–	–	–	–	–	–	–	–	–	–	–	Figure 15 / Figure 16		N/A
	WRPLB_0_0	**Write PPB Protection Lock Bit** transaction clears the PPB Lock to 0	WRENB_0_0	2C (CMD)	2C (CMD)	–	–	–	–	–	–	–	–	–	–	–	–			
	RDPLB_4_0	**Read Password Protection Mode Lock Bit** transaction shifts out the 8-bit PPB Lock Register contents with MSb first	–	2D (CMD)	2D (CMD)	00 (ADDR)	00 (ADDR)	00 (ADDR)	00 (ADDR)	–	–	–	–	–	–	–	–	Figure 24 / Figure 26		4
	PWDUL_4_1	**Password Unlock** transaction sends the 64-bit password to flash device. If the supplied password does not match the hidden password in the Password Register, the device is locked and only a hardware reset or POR will return the device to standby state, ready for new transactions such as a retry of the PWDUL_0_1. If the password does match, the PPB Lock bit is set to 1.	–	E9 (CMD)	E9 (CMD)	00 (ADDR)	00 (ADDR)	00 (ADDR)	00 (ADDR)	Password [7:0]	Password [15:8]	Password [23:16]	Password [31:24]	Password [39:32]	Password [47:40]	Password [55:48]	Password [63:56]	Figure 21 / Figure 22		N/A
Reset	SRSTE_0_0	**Software Reset Enable** command is required immediately before a SFRST_0_0 transaction	–	66 (CMD)	66 (CMD)	–	–	–	–	–	–	–	–	–	–	–	–	Figure 15 / Figure 16		
	SFRST_0_0	**Software Reset** transaction restores the device to its initial power up state, by reloading volatile registers from nonvolatile default values	SFRSE_0_0	99 (CMD)	99 (CMD)	–	–	–	–	–	–	–	–	–	–	–	–			
Deep Power Down	ENDPD_0_0	**Enter Deep Power Down Mode** transaction shifts device in the lowest power consumption mode	–	B9 (CMD)	B9 (CMD)	–	–	–	–	–	–	–	–	–	–	–	–			

Note
31. In case of Octal DDR protocol.

7. Electrical Characteristics

7.1 Absolute Maximum Ratings[34]

Storage Temperature Plastic Packages..... –65 °C to +150 °C
Ambient Temperature with Power Applied..... –65 °C to +125 °C
V_{CC} (HL-T).....–0.5 V to +4.0 V
V_{CC} (HS-T)..... –0.5 V to +2.5 V
Input voltage with respect to Ground (V_{SS})[32]..... –0.5 V to V_{CC} + 0.5 V
Output Short Circuit Current[33].....100 mA

Notes
32. See Section 7.6.1 Input Signal Overshoot on page 92 for allowed maximums during signal transition.
33. No more than one output may be shorted to ground at a time. Duration of the short circuit should not be greater than one second.
34. Stresses above those listed under Section 7.1 Absolute Maximum Ratings[34] on page 91 may cause permanent damage to the device. This is a stress rating only; functional operation of the device at these or any other conditions above those indicated in the operational sections of this datasheet is not implied. Exposure of the device to absolute maximum rating conditions for extended periods may affect device reliability.

7.2 Operating Range

Operating ranges define those limits between which the functionality of the device is guaranteed.

7.2.1 Power Supply Voltages

V_{CC} / V_{CCQ} (HL-T Devices)……..... 2.7 V to 3.6 V
V_{CC} / V_{CCQ} (HS-T Devices)……..... 1.7 V to 2.0 V

7.2.2 Temperature Ranges

Parameter	Symbol	Devices	Spec		Unit
			Min	Max	
Ambient Temperature	T_A	Industrial / Automotive AEC-Q100 Grade 3	–40	+85	°C
		Industrial Plus / Automotive AEC-Q100 Grade 2[35]		+105	
		Automotive AEC-Q100 Grade 1[35]		+125	

Note
35. Industrial Plus, Automotive Grade-2 and Automotive Grade-1 operating and performance parameters will be determined by device characterization and may vary from standard industrial or Automotive Grade-3 temperature range devices as currently shown in this specification.

7.3 Thermal Resistance

Table 77. Thermal Resistance

Parameter	Description	Test Condition		24-Ball BGA	Unit
Theta JA	Thermal Resistance (Junction to ambient)	Test conditions follow standard test methods and procedures for measuring thermal impedance in accordance with EIA/JESD51	With Still Air (0 m/s)	40.4 (512 Mb) / 34 (1 Gb)	°C/W

7.4 Capacitance Characteristics

Table 78. Capacitance

Symbol	Parameter	Test Conditions	Typ	Max	Unit
C_{IN}	Input Capacitance (applies to CK, CS#, RESET#)	1 MHz	3.0	7.50	pF
C_{OUT}	Output Capacitance (applies to All I/O)		6.50		

7.5 Latchup Characteristics

Table 79. Latchup Specification[36]

Description	Min	Max	Unit
Input voltage with respect to V_{SSQ} on all input only connections	–1.0	V_{CCQ} + 1.0	V
Input voltage with respect to V_{SSQ} on all I/O connections			
V_{CCQ} Current	–100	+100	mA

Note
36. Excludes power supply V_{CC}. Test conditions: V_{CC} = 1.8V / 3.0V, one connection at a time tested, connections not being tested are at V_{SS}.

7.6 DC Characteristics

7.6.1 Input Signal Overshoot

During DC conditions, input or I/O signals should remain equal to or between V_{SSQ} and V_{CCQ}. During voltage transitions, inputs or I/Os may overshoot V_{SSQ} to –1.0 V or overshoot to V_{CCQ} +1.0 V, for periods up to 20 ns.

Figure 65. Maximum Negative Overshoot Waveform

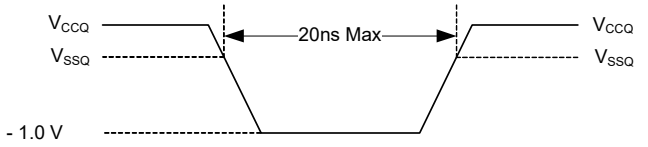

Figure 66. Maximum Positive Overshoot Waveform

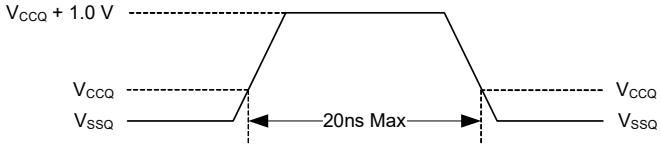

7.6.2 DC Characteristics (All Temperature Ranges)

Table 80. DC Characteristics[37, 39]

Symbol	Parameter	Test Conditions	Min	Typ	Max	Unit	Reference Figure
V_{IL}	Input Low Voltage (all V_{CC})	–	V_{CCQ} × -0.15	–	V_{CCQ} × 0.35	V	–
V_{IH}	Input High Voltage (all V_{CC})	–	V_{CCQ} × 0.65	–	V_{CCQ} × 1.15		
V_{OL}	Output Low Voltage (all V_{CC})	At 0.1 mA		–	0.2		
V_{OH}	Output High Voltage (all V_{CC})	At –0.1 mA	V_{CCQ} - 0.20	–			
I_{LI}	Input Leakage Current	V_{CC} = V_{CC} Max, V_{IN} = V_{IH} or V_{SS}, CS# = V_{IH}, 85 °C	–	–	±2	µA	
		V_{CC} = V_{CC} Max, V_{IN} = V_{IH} or V_{SS}, CS# = V_{IH}, 105 °C	–	–	±3		
		V_{CC} = V_{CC} Max, V_{IN} = V_{IH} or V_{SS}, CS# = V_{IH}, 125 °C	–	–	±4		
I_{LO}	Output Leakage Current	V_{CC} = V_{CC} Max, V_{IN} = V_{IH} or V_{SS}, CS# = V_{IH}, 85 °C	–	–	±2		
		V_{CC} = V_{CC} Max, V_{IN} = V_{IH} or V_{SS}, CS# = V_{IH}, 105 °C	–	–	±3		
		V_{CC} = V_{CC} Max, V_{IN} = V_{IH} or V_{SS}, CS# = V_{IH}, 125 °C	–	–	±4		
I_{CC1}	Active Power Supply Current (READ)[38]	SDR @ 50 MHz (HL512T / HS512T / HL01GT / HS01GT) SDR @ 166 MHz DDR @ 166 MHz SDR @ 200 MHz DDR @ 200 MHz	–	10 75 75 156 156	21 / 18 / 18 / 18 100 100 173 173	mA	
I_{CC2}	Active Power Supply Current (Page Program)	V_{CC} = V_{CC} Max, CS# = V_{IH}	–	50	58		
I_{CC3}	Active Power Supply Current (WRAR)	V_{CC} = V_{CC} Max, CS# = V_{IH}	–	50	55		
I_{CC4}	Active Power Supply Current (Sector Erase)	V_{CC} = V_{CC} Max, CS# = V_{IH}	–	50	55		
I_{CC5}	Active Power Supply Current (Chip Erase)	V_{CC} = V_{CC} Max, CS# = V_{IH}	–	50	55		

Notes
37. Typical values are at T_{AI} = 25 °C and V_{CC} = 1.8 V/3.0 V.
38. Outputs unconnected during read data return. Output switching current is not included.
39. The recommended pull-up resistor for the INT# outputs is 5 kΩ to 10 kΩ.

Table 80. DC Characteristics[37, 39] (Continued)

Symbol	Parameter	Test Conditions	Min	Typ	Max	Unit	Reference Figure
I_{SB}	Standby Current (HS512T/HS01GT)	RESET#, CS# = V_{CCQ}; All I/Os = V_{CCQ} or V_{SSQ}, 85 °C	–	11 / 11	113 / 113	µA	–
		RESET#, CS# = V_{CCQ}; All I/Os = V_{CCQ} or V_{SSQ}, 105 °C	–		188 / 113		
		RESET#, CS# = V_{CCQ}; All I/Os = V_{CCQ} or V_{SSQ}, 125 °C	–		340 / 113		
	Standby Current (HL512T/HL01GT)	RESET#, CS# = V_{CCQ}; All I/Os = V_{CCQ} or V_{SSQ}, 85 °C	–	14 / 14	126 / 126		
		RESET#, CS# = V_{CCQ}; All I/Os = V_{CCQ} or V_{SSQ}, 105 °C	–		188 / 126		
		RESET#, CS# = V_{CCQ}; All I/Os = V_{CCQ} or V_{SSQ}, 125 °C	–		340 / 126		
I_{DPD}	DPD Current (HS512T/HS01GT)	RESET#, CS# = V_{CCQ}; All I/Os = V_{CCQ} or V_{SSQ}, 85 °C	–	1.3 / 1.3	18 / 24		
		RESET#, CS# = V_{CCQ}; All I/Os = V_{CCQ} or V_{SSQ}, 105 °C	–		18 / 24		
		RESET#, CS# = V_{CCQ}; All I/Os = V_{CCQ} or V_{SSQ}, 125 °C	–		31 / 24		
	DPD Current (HL512T/HL01GT)	RESET#, CS# = V_{CCQ}; All I/Os = V_{CCQ} or V_{SSQ}, 85 °C	–	2.2 / 2.2	18 / 26		
		RESET#, CS# = V_{CCQ}; All I/Os = V_{CCQ} or V_{SSQ}, 105 °C	–		18 / 26		
		RESET#, CS# = V_{CCQ}; All I/Os = V_{CCQ} or V_{SSQ}, 125 °C	–		31 / 26		
I_{POR}	POR Current	RESET#, CS# = V_{CCQ}; All I/Os = V_{CCQ} or V_{SSQ}	–	–	80	mA	
Power Up / Power Down Voltage							
V_{CC} (min)	V_{CC} (minimum operation voltage, HL-T)	–	2.7	–	–	V	Figure 60 / Figure 61
	V_{CC} (minimum operation voltage, HS-T)	–	1.7	–	–		
V_{CC} (cut-off)	V_{CC} (cut off where re-initialization is needed, HL-T)	–	2.4	–	–		Figure 61
	V_{CC} (cut off where re-initialization is needed, HS-T)	–	1.55	–	–		
V_{CC} (Low)	V_{CC} (low voltage for initialization to occur, HL-T)	–	0.7	–	–		
	V_{CC} (Low voltage for initialization to occur, HS-T)	–	0.7	–	–		

Notes
37. Typical values are at T_{AI} = 25 °C and V_{CC} = 1.8 V/3.0 V.
38. Outputs unconnected during read data return. Output switching current is not included.
39. The recommended pull-up resistor for the INT# outputs is 5 kΩ to 10 kΩ.

7.7 AC Test Conditions

Figure 67. Test Setup

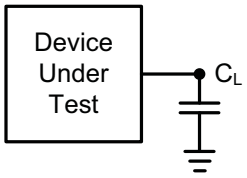

Table 81. AC Measurement Conditions[41]

Parameter	Min	Max	Unit	Reference Figure
Load Capacitance (C_L)	–	15	pF	Figure 67
Input Pulse Voltage	0	V_{CCQ}	V	Figure 69
CK Rise (t_{CRT1}) and Fall (t_{CFT1}) Slew Rates at 200 MHz (HS-T)[40]	1.13	–	V/ns	Figure 72
CK Rise (t_{CRT2}) and Fall (t_{CFT2}) Slew Rates at 166 MHz (HL-T)[40]	1.72	–		
Data Rise (t_{DRT1}) and Fall (t_{DFT1}) Slew Rates at 200 MHz (HS-T)[40]	1.13	–		Figure 69
Data Rise (t_{DRT2}) and Fall (t_{DFT2}) Slew Rates at 166 MHz (HL-T)[40]	1.72	–		
$V_{IL(ac)}$	$-0.30 \times V_{CCQ}$	$0.30 \times V_{CCQ}$	V	
$V_{IH(ac)}$	$0.7 \times V_{CCQ}$	$1.30 \times V_{CCQ}$		
$V_{OH(ac)}$	$0.75 \times V_{CCQ}$	–		Figure 70 / Figure 71
$V_{OL(ac)}$	–	$0.25 \times V_{CCQ}$		
Input Timing Ref Voltage	$V_{IH(ac)}$, $V_{IL(ac)}$			–
Output Timing Ref Voltage	$V_{OH(ac)}$, $V_{OL(ac)}$			

Notes
40. Input slew rate measured from input pulse min to max at V_{CC} max.
41. AC characteristics tables assume clock and data signals have the same slew rate (slope).

8. Timing Characteristics

Table 82. Timing Characteristics[44]

Symbol	Parameter	Min	Typ	Max	Unit	Reference Figure
Octal SDR/DDR						
f_{CK}	CK Clock Frequency for Octal mode transactions using DS (HS-T)	0	–	200	MHz	–
	CK Clock Frequency for Octal mode transactions using DS (HL-T)		–	166		
p_{CK}	CK Clock Period	$1/f_{CK}$	–	∞	ns	Figure 69
t_{CH}	Clock High Time	45% p_{CK}	–	55% p_{CK}		Figure 72
t_{CL}	Clock Low Time		–			
t_{CS}	CS# High Time (Read transactions)	10	–	–		Figure 75 / Figure 76
	CS# High Time Between Transactions (Interface CRC Read Register and aborted transaction)	50	–	–		
	CS# High Time (Program / Erase transactions)	50	–	–		
t_{CSS}	CS# Active Setup Time (relative to CK)	4	–	–		
t_{CSH0}	CS# Active Hold Time (relative to CK in Mode 0)	4	–	–		
t_{CSH3}	CS# Active Hold Time (relative to CK in Mode 3)	6.5	–	–		
t_{SU}	HS-T Data Setup Time (all V_{CC})	0.5	–	–		
	HL-T Data Setup Time (all V_{CC})	0.6	–	–		
t_{HD}	HL-T Data Hold Time (all V_{CC})	0.6	–	–		
	HS-T Data Hold Time (all V_{CC})	0.5	–	–		
t_V[42]	Clock Low to Output Valid (15 pF Loading) (HS-T)	2	–	5.45		Figure 75 / Figure 77
	Clock Low to Output Valid (15 pF Loading) (HL-T)		–	7.25		
t_{CKDS}	DS Valid (HS-T)	–	–	5.45		
	DS Valid (HL-T)	–	–	7.25		
t_{DSS}[50]	DS transition to Data Valid	–0.4	–	0.4		
t_{DSH}[50]	DS transition to Data Invalid	–0.4	–	0.4		
t_{HO}	Output Hold Time	0.4	–	–		Figure 75
t_{DIS}[43]	CS# Inactive to Output Disable Time (HS-T)	–	–	6.00		Figure 75 / Figure 77
	CS# Inactive to Output Disable Time (HL-T)	–	–	7.50		
t_{DSZ}	CS# Inactive to DS Disable Time (HS-T)	–	–	6		
	CS# Inactive to DS Disable Time (HL-T)	–	–	7.50		
t_{IO_SKEW}[50]	Data Skew (First Data Bit to Last Data Bit)	–	–	0.5		–
t_{PS}	Program/Erase Transaction CS# Invalid to Program Suspend / Erase Suspend Transaction CS# Invalid (Interface CRC)	–	–	15	µs	Figure 38
t_{CSDS}	CS# Low to DS Low	–	–	10	ns	Figure 27 / Figure 28
SPI SDR						
f_{CK}	CK Clock Frequency	0	–	166	MHz	–

Notes
42. Full V_{CC} range and CL = 15 pF.
43. Output HI-Z is defined as the point where data is no longer driven.
44. Applicable across all operating temperature options.
45. If Reset# is asserted during the end of t_{PU}, the device will remain in the reset state and t_{RH} will determine when CS# may go Low.
46. Sum of t_{RP} and t_{RH} must be equal to or greater than t_{RPH}.
47. Typical program and erase times assume the following conditions: 25 °C, V_{CC} = 1.8 V and 3.0 V; checkerboard data pattern.
48. The programming time for any OTP programming transaction is the same as t_{PP}. This includes PRSSR_4_1.
49. The programming time for the PRPPB_4_0 transaction is the same as t_{PP}. The erase time for ERPPB_0_0 transaction is the same as t_{SE}.
50. Values are guaranteed by characterization and not 100% tested in production.
51. Guaranteed by design.
52. The Joint Electron Device Engineering Council (JEDEC) standard JESD22-A117 defines the procedural requirements for performing valid endurance and retention tests based on a qualification specification. This methodology is intended to determine the ability of a flash device to sustain repeated data changes without failure (program/erase endurance) and to retain data for the expected life (data retention). Endurance and retention qualification specifications are specified in JESD47 or may be developed using knowledge-based methods as in JESD94.

Table 82. Timing Characteristics[44] (Continued)

Symbol	Parameter	Min	Typ	Max	Unit	Reference Figure
p_{CK}	CK Clock Period	1/ f_{CK}	–	∞	ns	Figure 69
t_{CH}	Clock High Time	45% p_{CK}	–	55% p_{CK}	ns	Figure 72
t_{CL}	Clock Low Time	45% p_{CK}	–	55% p_{CK}		
t_{CS}	CS# High Time (Read transactions)	10	–	–		Figure 73 / Figure 74
	CS# High Time Between Transactions (aborted commands)	20	–	–		
	CS# High Time (Program / Erase transactions)	50	–	–		
t_{CSS}	CS# Active Setup Time relative to CK ($f_{CK} \leq 50$ MHz / $f_{CK} > 50$ MHz)	5/4	–	–		Figure 73
t_{CSH0}	CS# Active Hold Time (relative to CK in Mode 0)	4	–	–		
t_{CSH3}	CS# Active Hold Time (relative to CK in Mode 3)	6	–	–		
t_{SU}	Data Setup Time (all V_{CC}) ($f_{CK} \leq 50$ MHz / $f_{CK} > 50$ MHz)	5 / 2	–	–		
t_{HD}	Data Hold Time (all V_{CC}) ($f_{CK} \leq 50$ MHz / $f_{CK} > 50$ MHz)	5 / 2	–	–		
t_V	Clock Low to Output Valid (15 pF Loading, 3.0 V – 3.6 V, 30 Ω Output Impedance) (HL-T)	2	–	6.5	ns	Figure 74
	Clock Low to Output Valid (30 pF Loading) (HS-T)	2	–	8		
	Clock Low to Output Valid (30 pF Loading) (HL-T)	2	–	9		
	Clock Low to Output Valid (15 pF Loading) (HS-T)	2	–	6		
	Clock Low to Output Valid (15 pF Loading) (HL-T)	2	–	8		
t_{HO}	Output Hold Time	1.5	–	–		
t_{DIS}	Output Disable Time (HS-T)	–	–	6		
	Output Disable Time (HL-T)	–	–	7.50		
Power Up / Power Down Timing						
t_{PU}	V_{CC}(min) to Read operation (HL512T / HS512T / HL01GT / HS01GT)	–	–	450 / 500 / 400 / 450	µs	Figure 60
t_{PD}	V_{CC}(Low) time	25	–	–		Figure 61
t_{VR}[51]	V_{CC} / V_{CC}Q Power Up ramp rate	1	–	–	µs/V	Figure 62
t_{VF}	V_{CC} / V_{CC}Q Power Down ramp rate	30.0	–	–	µs/V	
Deep Power Down Mode Timing						
t_{ENTDPD}[51]	Time to Enter DPD mode	–	–	3	µs	–
t_{EXTDPD}	Time to Exit DPD mode (HL512T / HS512T / HL01GT / HS01GT)	–	–	380 / 430 / 320 / 350		Figure 59
t_{CSDPD}	Chip Select Pulse Width to Exit DPD	0.02	–	3		
Reset Timing[45, 46]						
t_{RS}	Reset Setup - RESET# High before CS# Low	50	–	–	ns	Figure 52
t_{RH}	Reset Pulse Hold - RESET# Low to CS# Low (HL512T / HS512T / HL01GT / HS01GT)	450 / 500 / 400 / 450	–	–	µs	
t_{RP}	RESET# Pulse Width	200	–	–	ns	
t_{SR}	Internal Device Reset from Software Reset transaction (HL512T / HS512T / HL01GT / HS01GT)	–	–	83 / 83 / 60 / 60	µs	–

Notes
42. Full V_{CC} range and CL = 15 pF.
43. Output HI-Z is defined as the point where data is no longer driven.
44. Applicable across all operating temperature options.
45. If Reset# is asserted during the end of t_{PU}, the device will remain in the reset state and t_{RH} will determine when CS# may go Low.
46. Sum of t_{RP} and t_{RH} must be equal to or greater than t_{RPH}.
47. Typical program and erase times assume the following conditions: 25 °C, V_{CC} = 1.8 V and 3.0 V; checkerboard data pattern.
48. The programming time for any OTP programming transaction is the same as t_{PP}. This includes PRSSR_4_1.
49. The programming time for the PRPPB_4_0 transaction is the same as t_{PP}. The erase time for ERPPB_0_0 transaction is the same as t_{SE}.
50. Values are guaranteed by characterization and not 100% tested in production.
51. Guaranteed by design.
52. The Joint Electron Device Engineering Council (JEDEC) standard JESD22-A117 defines the procedural requirements for performing valid endurance and retention tests based on a qualification specification. This methodology is intended to determine the ability of a flash device to sustain repeated data changes without failure (program/erase endurance) and to retain data for the expected life (data retention). Endurance and retention qualification specifications are specified in JESD47 or may be developed using knowledge-based methods as in JESD94.

Table 82. Timing Characteristics[44] (Continued)

Symbol	Parameter	Min	Typ	Max	Unit	Reference Figure
CS# Signaling Reset Timing						
t_{CSLW}	Chip Select Low	500	–	–	ns	Figure 57
t_{CSHG}	Chip Select High	500	–	–		
t_{RESET}	Internal device reset (HL512T / HS512T / HL01GT / HS01GT)	–	–	450 / 500 / 400 / 450	µs	
t_{SUJ}	Data in Setup Time (w.r.t CS#)	50	–	–	ns	
t_{HDJ}	Data in Hold Time (w.r.t CS#)	50	–	–		
Embedded Algorithm (Erase, Program and Data Integrity Check) Performance[47, 48, 49, 52]						
t_W	nonvolatile Register Write Time	–	44	357.5	ms	–
t_{PP}	256B Page Programming (4 KB Sector / 256 KB Sector)	–	430 / 480	2175 / 1700	µs	–
	512B Page Programming (4 KB Sector / 256 KB Sector)	–	680 / 570	2175 / 1700		
t_{SE}	Sector Erase Time (4 KB physical sectors)	–	42	335	ms	
	Sector Erase Time (256 KB EnduraFlex Architecture disabled)	–	773	2677		
	Sector Erase Time (256 KB EnduraFlex Architecture enabled)	–	773	5869		
t_{BE}	Chip Erase Time (256 Mb)	–	101	348	sec	
	Chip Erase Time (512 Mb)	–	201	696		
	Chip Erase Time (1 Gb)	–	398	1381		
t_{EES}	Evaluate Erase Status Time for 4 KB physical sectors (HL512T / HS512T / HL01GT / HS01GT)	–	45	51 / 51 / 50 / 50	µs	
	Evaluate Erase Status Time for 256 KB physical sectors (HL512T / HS512T / HL01GT/ HS01GT)	–				
t_{DIC_SETUP}	Data Integrity Check Calculation Setup Time	–	17	–	µs	–
t_{DIC_RATES}	Data Integrity Check Calculation Rate (Calculation rate over a large (>1024-byte) block of data) (HL512T / HS512T / HL01GT / HS01GT)	55 / 55 / 60 / 60	65	–	MBps	
t_{SEC}	Sector Erase Count Time (HL512T / HS512T / HL01GT / HS01GT)	–	55	63 / 63 / 60 / 60	µs	
t_{BEC1}	Blank Check single 256 KB sector	–	13	17	ms	
t_{BEC2}	Blank Check single 4 KB sector	–	1	2		
$t_{PASSWORD}$	Password Comparison Time	80	100	120	µs	
Program, Erase, or Data Integrity Check Suspend/Resume Timing						
t_{PEDS}	Program/Erase/Data Integrity Check Suspend (HL512T / HS512T / HL01GT / HS01GT)	–	–	64 / 64 / 60 / 60	µs	–
t_{PEDRS}	Program/Erase/Data Integrity Check Resume to next Program/ Erase/Data Integrity Check Suspend	–	100	–		

Notes
42. Full V_{CC} range and CL = 15 pF.
43. Output HI-Z is defined as the point where data is no longer driven.
44. Applicable across all operating temperature options.
45. If Reset# is asserted during the end of t_{PU}, the device will remain in the reset state and t_{RH} will determine when CS# may go Low.
46. Sum of t_{RP} and t_{RH} must be equal to or greater than t_{RPH}.
47. Typical program and erase times assume the following conditions: 25 °C, V_{CC} = 1.8 V and 3.0 V; checkerboard data pattern.
48. The programming time for any OTP programming transaction is the same as t_{PP}. This includes PRSSR_4_1.
49. The programming time for the PRPPB_4_0 transaction is the same as t_{PP}. The erase time for ERPPB_0_0 transaction is the same as t_{SE}.
50. Values are guaranteed by characterization and not 100% tested in production.
51. Guaranteed by design.
52. The Joint Electron Device Engineering Council (JEDEC) standard JESD22-A117 defines the procedural requirements for performing valid endurance and retention tests based on a qualification specification. This methodology is intended to determine the ability of a flash device to sustain repeated data changes without failure (program/erase endurance) and to retain data for the expected life (data retention). Endurance and retention qualification specifications are specified in JESD47 or may be developed using knowledge-based methods as in JESD94.

8.1 Timing Waveforms

8.1.1 Key to Timing Waveform

Figure 68. Waveform Element Meanings

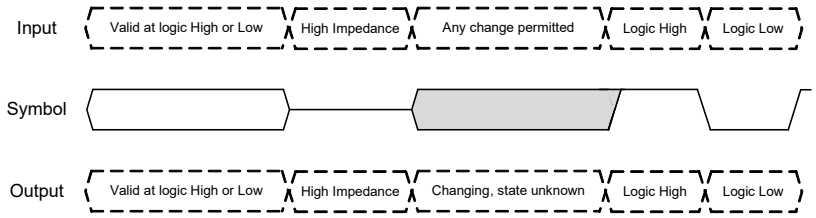

8.1.2 Timing Reference Levels

Figure 69. Input Timing Reference Levels

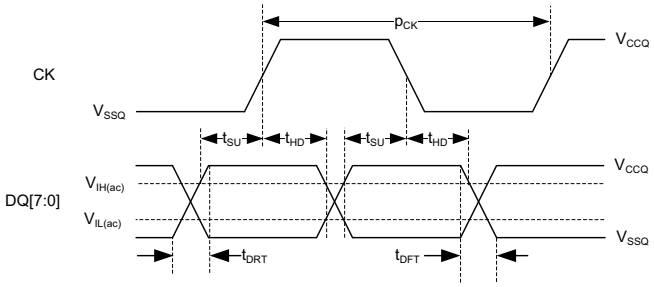

Figure 70. SDR Output Timing Reference Level

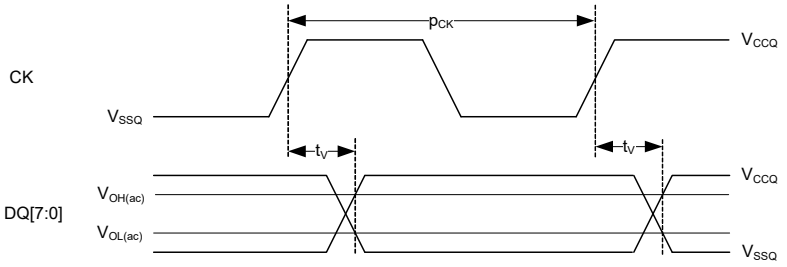

Figure 71. DDR Output Timing Reference Level

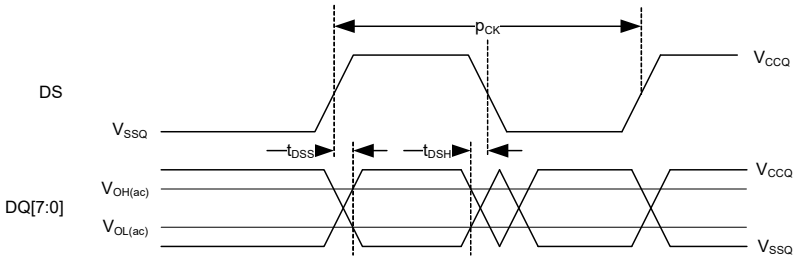

8.1.3 Clock Timing

Figure 72. Clock Timing

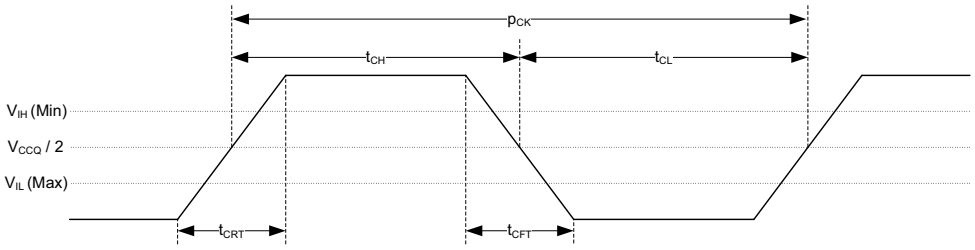

8.1.4 Input / Output Timing

Figure 73. SPI Input Timing

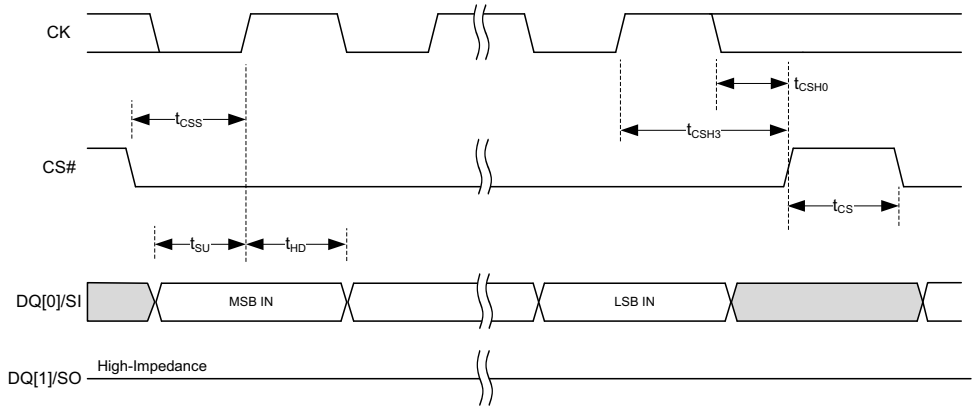

Figure 74. SPI Output Timing

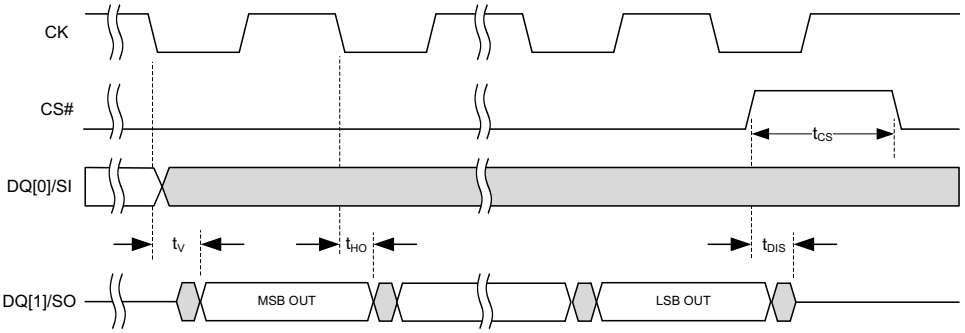

Figure 75. Octal SDR Input and Output Timing

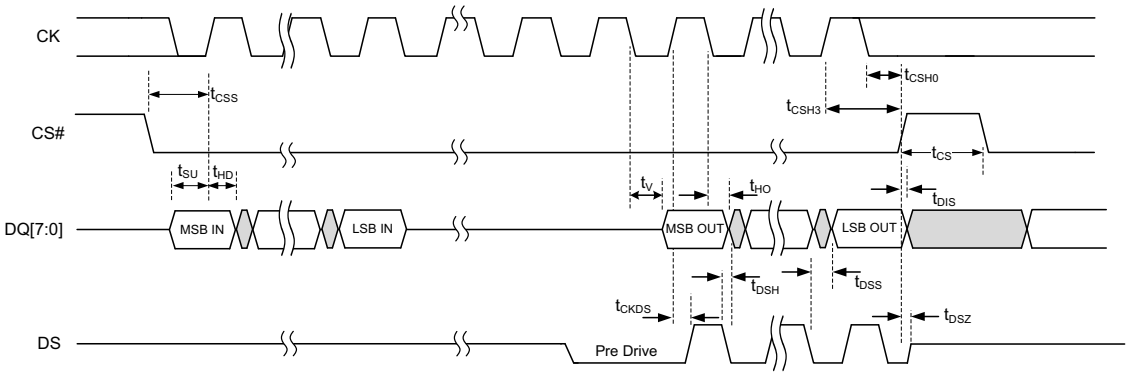

Figure 76. Octal DDR Input Timing

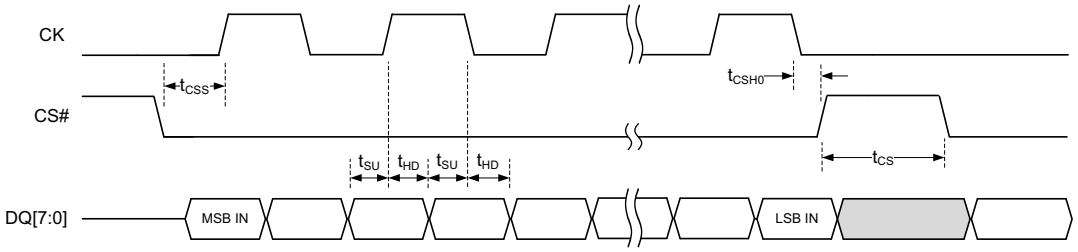

Figure 77. Octal DDR Output Timing

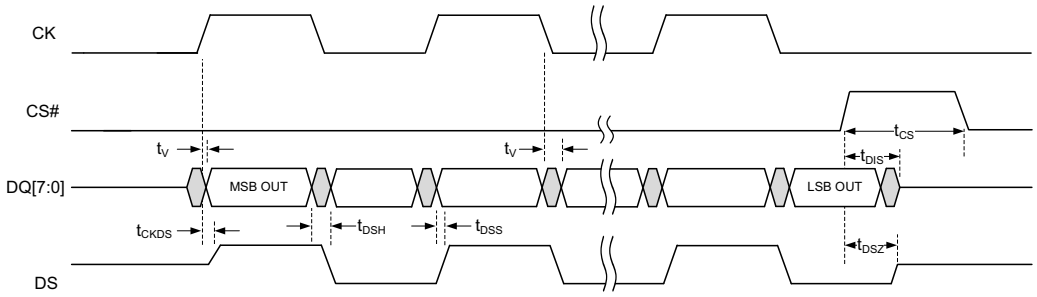

9. Device Identification

9.1 JEDEC SFDP Rev D

9.1.1 JEDEC SFDP Rev D Header Table

Table 83. JEDEC SFDP Rev D Header Table

SFDP Byte Address	SFDP DWORD Name	Data	Description
00h	SFDP Header	53h	This is the entry point for Read SFDP (5Ah) command i.e., location zero within SFDP space ASCII “S”
01h		46h	ASCII “F”
02h		44h	ASCII “D”
03h		50h	ASCII “P”
04h		08h	SFDP Minor Revision (08h = JEDEC JESD216 Revision D)
05h		01h	SFDP Major Revision (01h = JEDEC JESD216 Revision D)
06h		05h	Number of Parameter Headers (zero based, 05h = 6 parameters)
07h		FEh	xSPI NOR Profile 1 Octal, (8D, 8D, 8D) operation, 4-byte addressing for SFDP command, 8 WAIT states (Booting up in 1S-1S-1S mode)
08h	1st Parameter Header	00h	Parameter ID LSB (00h = JEDEC SFDP Basic SPI Flash Parameter)
09h		00h	Parameter Table Minor Revision (00h = JEDEC JESD216 Revision D)
0Ah		01h	Parameter Table Major Revision (01h = JEDEC JESD216 Revision D)
0Bh		14h	Parameter Table Length (14h = 20 DWORDs are in the Parameter table)
0Ch		00h	Parameter Table Pointer Byte 0 (DWORD = 4 byte aligned) JEDEC Basic SPI Flash parameter byte offset = 0100h address
0Dh		01h	Parameter Table Pointer Byte 1
0Eh		00h	Parameter Table Pointer Byte 2
0Fh		FFh	Parameter ID MSB (FFh = JEDEC defined Parameter)
10h	2nd Parameter Header	84h	Parameter ID LSB (84h = 4-Byte Address Instruction Table)
11h		00h	Parameter Table Minor Revision (00h = JEDEC JESD216 Revision D)
12h		01h	Parameter Table Major Revision (01h = JEDEC JESD216 Revision D)
13h		02h	Parameter Table Length (2h = 2 DWORDs are in the Parameter table)
14h		50h	Parameter Table Pointer Byte 0 (DWORD = 4-byte aligned) 4-Byte Address Instruction Table byte offset = 0150h address
15h		01h	Parameter Table Pointer Byte 1
16h		00h	Parameter Table Pointer Byte 2
17h		FFh	Parameter ID MSB (FFh = JEDEC defined Parameter)
18h	3rd Parameter Header	05h	Parameter ID LSB (05h = JEDEC xSPI Profile 1.0)
19h		00h	Parameter Table Minor Revision (00h = JEDEC JESD216 Revision D)
1Ah		01h	Parameter Table Major Revision (01h = JEDEC JESD216 Revision D)
1Bh		05h	Parameter Table Length (5h = 5 DWORDs are in the Parameter table)
1Ch		58h	Parameter Table Pointer Byte 0 (DWORD = 4-byte aligned) JEDEC xSPI Profile 1.0 = 0158h address
1Dh		01h	Parameter Table Pointer Byte 1
1Eh		00h	Parameter Table Pointer Byte 2
1Fh		FFh	Parameter ID MSB (FFh = JEDEC defined Parameter)

Table 83. JEDEC SFDP Rev D Header Table (Continued)

SFDP Byte Address	SFDP DWORD Name	Data	Description
20h	4th Parameter Header	87h	Parameter ID LSB (87h = JEDEC Status, Control and Configuration Register Map)
21h		00h	Parameter Table Minor Revision (00h = JEDEC JESD216 Revision D)
22h		01h	Parameter Table Major Revision (01h = JEDEC JESD216 Revision D)
23h		1Ch	Parameter Table Length (1Ch = 28 DWORDs are in the Parameter table)
24h		6Ch	Parameter Table Pointer Byte 0 (DWORD = 4-byte aligned) JEDEC Status, Control and Configuration Register Map = 016Ch address
25h		01h	Parameter Table Pointer Byte 1
26h		00h	Parameter Table Pointer Byte 2
27h		FFh	Parameter ID MSB (FFh = JEDEC defined Parameter)
28h	5th Parameter Header	0Ah	Parameter ID LSB (0Ah = Command Sequences to change to Octal DDR (8D-8D-8D) mode)
29h		00h	Parameter Table Minor Revision (00h = JEDEC JESD216 Revision D)
2Ah		01h	Parameter Table Major Revision (01h = JEDEC JESD216 Revision D)
2Bh		04h	Parameter Table Length (4h = 4 DWORDs are in the Parameter table)
2Ch		DCh	Parameter Table Pointer Byte 0 (DWORD = 4-byte aligned) Command Sequences to Change to Octal DDR (8D-8D-8D) Mode = 1DCh address
2Dh		01h	Parameter Table Pointer Byte 1
2Eh		00h	Parameter Table Pointer Byte 2
2Fh		FFh	Parameter ID MSB (FFh = JEDEC defined Parameter)
30h	6th Parameter Header	81h	Parameter ID LSB (81h = JEDEC Sector Map)
31h		00h	Parameter Table Minor Revision (00h = JEDEC JESD216 Revision D)
32h		01h	Parameter Table Major Revision (01h = JEDEC JESD216 Revision D)
33h		16h	Parameter Table Length (16h = 22 DWORDs are in the Parameter table)
34h		ECh	Parameter Table Pointer Byte 0 (DWORD = 4-byte aligned) JEDEC Sector Map = 1ECh address
35h		01h	Parameter Table Pointer Byte 1
36h		00h	Parameter Table Pointer Byte 2
37h		FFh	Parameter ID MSB (FFh = JEDEC defined Parameter)

Table 84. JEDEC SFDP Rev D Parameter Table

SFDP Byte Address	SFDP DWORD Name	Data	Description
100h	JEDEC Basic Flash Parameter DWORD-1	E7h	Bits 7:5 = unused = 111b Bit 4 = 50h is Volatile Status Register write instruction and Status Register is default = 0b Bit 3 = Block Protect Bits are nonvolatile / volatile = 0b Bit 2 = Program Buffer > 64 Bytes = 1b Bits 1:0 = Uniform 4 KB erase is unavailable = 11b
101h		21h	Bits 15:8 = 4 KB erase instruction = 21h
102h		8Ah	Bit 23 = Unused = 1b Bit 22 = (1-1-4) Fast Read NOT supported = 0b Bit 21 = (1-4-4) Fast Read NOT supported = 0b Bit 20 = (1-2-2) Fast Read NOT supported = 0b Bit19 = Supports DDR, Yes = 1b Bit 18:17 = 3- or 4-Byte addressing (for example, defaults to 3-Byte mode; enters 4-Byte mode on command) = 01b Bit 16 = (1-1-2) Fast Read NOT supported = 0b
103h		FFh	Bits 31:24 = Unused = FFh
104h	JEDEC Basic Flash Parameter DWORD-2	FFh	Density in bits, zero based, 256 Mb = 0FFFFFFFh Density in bits, zero based, 512 Mb = 1FFFFFFFh Density in bits, zero based, 1 Gb = 3FFFFFFFh
105h		FFh	
106h		FFh	
107h		0Fh for 256M 1Fh for 512M 3Fh for 1G	
108h	JEDEC Basic Flash Parameter DWORD-3	00h	Not Supported
109h		00h	
10Ah		00h	
10Bh		00h	
10Ch	JEDEC Basic Flash Parameter DWORD-4	00h	Not Supported
10Dh		00h	
10Eh		00h	
10Fh		00h	
110h	JEDEC Basic Flash Parameter DWORD-5	EEh	Bits 7:5 = Reserved = 111b Bit 4 = Not Supported = 0b Bit 3:1 = Reserved = 111b Bits 0 = Not Supported = 0b
111h		FFh	Reserved
112h		FFh	
113h		FFh	
114h	JEDEC Basic Flash Parameter DWORD-6	FFh	Reserved
115h		FFh	
116h		00h	Not Supported
117h		00h	
118h	JEDEC Basic Flash Parameter DWORD-7	FFh	Reserved
119h		FFh	
11Ah		00h	Not Supported
11Bh		00h	
11Ch	JEDEC Basic Flash Parameter DWORD-8	0Ch	Erase Type 1 Size, 4 KB erase instruction = Erase type size = 2^N (where N = 12) = 0Ch
11Dh		21h	Erase Type 1 Instruction
11Eh		00h	Erase Type 2 Not Supported
11Fh		FFh	Erase Type 2 Not Supported
120h	JEDEC Basic Flash Parameter DWORD-9	00h	Erase Type 3 Not Supported
121h		FFh	Erase Type 3 Not Supported
122h		12h	Erase Type 4 Size, 256 KB erase instruction = Erase type size = 2^N (where N = 18) = 12h
123h		DCh	Erase Type 4 Instruction

Table 84. JEDEC SFDP Rev D Parameter Table (Continued)

SFDP Byte Address	SFDP DWORD Name	Data	Description
124h	JEDEC Basic Flash Parameter DWORD-10	23h	Bits 31:30 = Erase type 4 Erase, Typical time units (00b: 1 ms, 01b: 16 ms, 10b: 128 ms, 11b: 1 s) = 128 ms = 10b Bits 29:25 = Erase type 4 Erase, Typical time count = 00101b (typ erase time = count +1 * units = 6 * 128 ms = 768 ms) Bits 24:23 = Erase type 3 Erase, Typical time units (00b: 1 ms, 01b: 16 ms, 10b: 128 ms, 11b: 1 s) = 1S = 11b (RFU) Bits 22:18 = Erase type 3 Erase, Typical time count = 11111b (RFU) Bits 17:16 = Erase type 2 Erase, Typical time units (00b: 1 ms, 01b: 16 ms, 10b: 128 ms, 11b: 1 s) = 1S = 11b (RFU) Bits 15:11 = Erase type 2 Erase, Typical time count = 11111b (RFU) Bits 10:9 = Erase type 1 Erase, Typical time units (00b: 1 ms, 01b: 16 ms, 10b: 128 ms, 11b: 1 s) = 16ms = 01b Bits 8:4 = Erase type 1 Erase, Typical time count = 00010b (typ erase time = count +1 * units = 3 * 16 ms = 48 ms) Bits 3:0 = Count = (Max Erase time / (2 * Typical Erase time))- 1 = 0011b
125h		FAh	
126h		FFh	
127h		8Bh	
128h	JEDEC Basic Flash Parameter DWORD-11	91h	Bits 31 = Reserved = 1b Bits 30:29 = Chip Erase Typical time units (00b: 16 ms, 01b: 256 ms, 10b: 4 s, 11b: 64 s) = 11b (256M, 512M, and 1G) Bits 28:24 = Chip Erase Typical time count = 00001b (256M), 00011b (512M), and 00110b (1G) Bits 23:19 = Byte Program Typical Time, additional byte = 11111b Bits 18:14 = Byte Program Typical Time, first byte = 11111b Bits 13 = Page Program Typical Time unit (0: 8 µs, 1: 64 µs) = 64 µs = 1b Bits 12:8 = Page Program Typical Time Count = 01000 (typ Program time = count +1 * units = 9 * 64 µs = 576 µs) Bits 7:4 = Page Size (512B) = 2^N bytes = 1001h Bits 3:0 = Count = [Max page program time / (2 * Typical page program time)] - 1 = 0001b
129h		E8h	
12Ah		FFh	
12Bh		E1h for 256M E3h for 512M E6h for 1G	
12Ch	JEDEC Basic Flash Parameter DWORD-12	ECh	Bit 31 = Suspend and Resume supported = 0b Bits 30:29 = Suspend in-progress erase max latency units (00b: 128ns, 01b: 1µs, 10b: 8µs, 11b: 64µs) = 64 µs = 11b Bits 28:24 = Suspend in-progress erase max latency count = 00000b, max erase suspend latency = count +1 * units = 1 * 64 µs = 64 µs Bits 23:20 = Erase resume to suspend interval count = 0001b, interval = count +1 * 64 µs = 2 * 64 µs = 128 µs Bits 19:18 = Suspend in-progress program max latency units (00b: 128ns, 01b: 1µs, 10b: 8µs, 11b: 64µs) = 64 µs = 11b Bits 17:13 = Suspend in-progress program max latency count = 00000b, max erase suspend latency = count +1 * units = 1 * 64 µs = 64 µs Bits 12:9 = Program resume to suspend interval count = 0001b, interval = count +1 * 64 µs = 2 * 64 µs = 128 µs Bit 8 = Reserved = 1b Bits 7:4 = Prohibited operations during erase suspend = xxx0b: May not initiate a new erase anywhere (erase nesting not permitted) + xx1xb: May not initiate a page program in the erase suspended sector size + x1xxb: May not initiate a read in the erase suspended sector size + 1xxxb: The erase and program restrictions in bits 5:4 are sufficient = 1110b Bits 3:0 = Prohibited Operations During Program Suspend = xxx0b: May not initiate a new erase anywhere (erase nesting not permitted) + xx0xb: May not initiate a new page program anywhere (program nesting not permitted) + x1xxb: May not initiate a read in the program suspended page size + 1xxxb: The erase and program restrictions in bits 1:0 are sufficient = 1100b
12Dh		03h	
12Eh		1Ch	
12Fh		60h	
130h	JEDEC Basic Flash Parameter DWORD-13	30h	Bits 7:0 = Program Resume Instruction = 30h
131h		B0h	Bits 15:8 = Program Suspend Instruction = B0h
132h		30h	Bits 23:16 = Erase Resume Instruction = 30h
133h		B0h	Bits 31:24 = Erase Suspend Instruction = B0h
134h	JEDEC Basic Flash Parameter DWORD-14	F7h	Bits 7:4 = RFU = Fh Bit 3:2 = Status Register Polling Device Busy = 01b: Legacy status polling supported = Use legacy polling by reading the Status Register with 05h instruction and checking WIP bit[0] (0 = ready; 1 = busy). Bits 1:0 = RFU = 11b
135h		66h	Bit 31 = DPD Supported = supported = 0 Bits 30:23 = Enter DPD Instruction = B9h Bits 22:15 = Exit DPD Instruction not supported = 00h Bits 14:13 = Exit DPD to next operation delay units = (00b: 128 ns, 01b: 1 µs, 10b: 8 µs, 11b: 64 µs) = 64 µs = 11b Bits 12:8 = Exit DPD to next operation delay count = 00110, Exit DPD to next operation delay = (count+1) * units = (6 + 1) * 64 µs = 448 µs
136h		72h	
137h		01h	
138h	JEDEC Basic Flash Parameter DWORD-15	00h	Bits 31:24 = Reserved = FFh Bit 23 = Hold or RESET Disable = Not Supported = 0b Bits 22:0 = Not supported = 000000h
139h		00h	
13Ah		00h	
13Bh		FFh	

Table 84. JEDEC SFDP Rev D Parameter Table (Continued)

SFDP Byte Address	SFDP DWORD Name	Data	Description
13Ch	JEDEC Basic Flash Parameter DWORD-16	F9h	Bit 7 = Reserved = 1 Bits 6:0 = Volatile or Nonvolatile Register and Write Enable Instruction for Status Register 1 xxx_xxx1b: Nonvolatile Status Register 1, powers-up to last written value, use instruction 06h to enable write. + xxx_1xxxb: Nonvolatile/Volatile Status Register 1 powers-up to last written value in the nonvolatile status register, use instruction 06h to enable write to nonvolatile status register. Volatile status register may be activated after power-up to override the nonvolatile status register, use instruction 50h to enable write and activate the volatile status register. + xx1_xxxxb: Status Register 1 contains a mix of volatile and nonvolatile bits. The 06h instruction is used to enable writing of the register. + x1x_xxxxb: Reserved + 1xx_xxxxb: Reserved = 1111001b
13Dh		10h	Bits 23:14 = Not supported =000h Bits 13:8 = Soft Reset and Rescue Sequence Support + x1_xxxxb: issue reset enable instruction 66h, then issue reset instruction 99h. The reset enable, reset sequence may be issued on 1, 2, or 4 wires depending on the device operating mode. = 010000b
13Eh		00h	
13Fh		A0h	Bits 31:24 = Enter 4-byte Addressing + xx1x_xxxxb: Supports dedicated 4-Byte address instruction set. Refer the vendor datasheet for the instruction set definition + 1xxx_xxxxb: Reserved = 1010_0000b
140h	JEDEC Basic Flash Parameter DWORD-17	00h	Not Supported
141h		00h	
142h		00h	
143h		00h	
144h	JEDEC Basic Flash Parameter DWORD-18	00h	Bit 31 = High byte and low byte of 16-bit words are in the same order when read in 1-1-1 mode and 8-8-8 mode = 0b Bit 30:29 = The Command Extension is the same as the Command = 00b Bit 28 = Reserved = 0b Bit 27:26 = Not supported = 00b Bits 25:24 = First rising edge of DS in the middle of the first data bit, start of first data bit aligned with the first falling edge of DS = 10b Bit 23 = JEDEC SPI Protocol Reset Supported = 1b Bit 22:18 = 00001b xSPI Support for drive strength Bits 17:0 = Reserved = 00000h
145h		00h	
146h		84h	
147h		02h	
148h	JEDEC Basic Flash Parameter DWORD-19	00h	Not Supported
149h		00h	
14Ah		00h	
14Bh		00h	
14Ch	JEDEC Basic Flash Parameter DWORD-20	FFh	Bits 31:28 = Maximum operation speed of device in 8D-8D-8D mode when utilizing Data Strobe = 1000b (200 MHz) / 0111b (166 MHz) Bits 27:24 = 8D-8D-8D mode without using Data Strobe is not characterized = 1110b Bits 23:20 = Maximum operation speed of device in 8S-8S-8S mode when utilizing Data Strobe = 1000b (200 MHz) / 0111b (166 MHz) Bits 19:16 = 8S-8S-8S mode without using Data Strobe is not characterized = 1110b Bit 15:0 = Not supported = FFFFh
14Dh		FFh	
14Eh		8Eh for HS-T 7Eh for HL-T	
14Fh		8Eh for HS-T 7Eh for HL-T	

Table 84. JEDEC SFDP Rev D Parameter Table (Continued)

SFDP Byte Address	SFDP DWORD Name	Data	Description
150h	JEDEC 4-Byte Address Instructions Parameter DWORD-1	43h	Supported = 1, Not Supported = 0 Bits 31:25 = Reserved = 1111_111b Bit 24 = Support for (1-8-8) Page Program Command, Instruction = 8Eh = 0b Bit 23 = Support for (1-1-8) Page Program Command, Instruction = 84h = 0b Bit 22 = Support for (1-8-8) DTR READ Command, Instruction = FDh = 0b Bit 21 = Support for (1-8-8) FAST_READ Command, Instruction = CCh = 0b Bit 20 = Support for (1-1-8) FAST_READ Command, Instruction = 7Ch = 0b Bit 19 = Support for nonvolatile individual sector lock write command, Instruction = E3h = 1b Bit 18 = Support for nonvolatile individual sector lock read command, Instruction = E2h = 1b Bit 17 = Support for volatile individual sector lock Write command, Instruction = E1h = 1b Bit 16 = Support for volatile individual sector lock Read command, Instruction = E0h = 1b Bit 15 = Support for (1-4-4) DTR_Read Command, Instruction = EEh = 0b Bit 14 = Support for (1-2-2) DTR_Read Command, Instruction = BEh = 0b Bit 13 = Support for (1-1-1) DTR_Read Command, Instruction = 0Eh = 0b Bit 12 = Support for Erase Command – Type 4 = 1b Bit 11 = Support for Erase Command – Type 3 = 0b Bit 10 = Support for Erase Command – Type 2 = 0b Bit 9 = Support for Erase Command – Type 1 = 1b Bit 8 = Support for (1-4-4) Page Program Command, Instruction = 3Eh = 0b Bit 7 = Support for (1-1-4) Page Program Command, Instruction = 34h = 0b Bit 6 = Support for (1-1-1) Page Program Command, Instruction = 12h = 1b Bit 5 = Support for (1-4-4) FAST_READ Command, Instruction = ECh = 0b Bit 4 = Support for (1-1-4) FAST_READ Command, Instruction = 6Ch = 0b Bit 3 = Support for (1-2-2) FAST_READ Command, Instruction = BCh = 0b Bit 2 = Support for (1-1-2) FAST_READ Command, Instruction = 3Ch = 0b Bit 1 = Support for (1-1-1) FAST_READ Command, Instruction = 0Ch = 1b Bit 0 = Support for (1-1-1) READ Command, Instruction = 13h = 1b
151h		12h	
152h		0Fh	
153h		FEh	
154h	JEDEC 4-Byte Address Instructions Parameter DWORD-2	21h	Bits 31:24 = DCh = Instruction for Erase Type 4 Bits 23:16 = Instruction for Erase Type 3: RFU Bits 15:8 = Instruction for Erase Type 2: RFU Bits 7:0 = 21h = Instruction for Erase Type 1
155h		FFh	
156h		FFh	
157h		DCh	
158h	JEDEC xSPI Profile 1.0 DWORD-1	00h	Bits 7:0 = Read Fast Wrapped command not supported = 00h
159h		EEh	Bits 15:8 = Read Fast command = EEh (DDR Read)
15Ah		80h	Bit 23 = Number of Additional Modifier Bytes Used for Write Register command = 4 bytes = 1b Bit 22 = Number of Data Bytes Used for Write Register command = 1 byte = 0b Bits 21:16 = Reserved = 000000b
15Bh		9Bh	Bit 31 = xSPI Support, Device implements the SFDP command in 8D-8D-8D protocol mode as defined in the Jedec xSPI spec = 1b Bit 30 = SFDP Command in 8D-8D-8D mode – Dummy Cycles = 8 bytes = 0b Bit 29 = Number of Additional Modifier Bytes Used for Read Status Register command = 0 bytes = 0b Bit 28 = Initial Latency (CK cycles) for Read Status Register command = 8 CK cycles = 1b Bit 27 = Number of Additional Modifier Bytes Used for Read Register command = 4 bytes = 1b Bit 26 = Initial Latency (CK cycles) for Read Volatile Register command = 4CK = 0b Bit 25 = Initial Latency (CK cycles) for Read Volatile Non-Register command = 8 CK cycles = 1b Bit 24 = Number of Additional Modifier Bytes Used for Write Status-Cfg Register command= 4 bytes = 1b
15Ch	JEDEC xSPI Profile 1.0 DWORD-2	00h	Write Nonvolatile Register command not supported
15Dh		00h	Write Volatile Register command not supported
15Eh		00h	Read NV Register command not supported
15Fh		00h	Read Volatile Register command not supported

Table 84. JEDEC SFDP Rev D Parameter Table (Continued)

SFDP Byte Address	SFDP DWORD Name	Data	Description
160h	JEDEC xSPI Profile 1.0 DWORD-3	00h	Bits 7:0 = Reserved = 00h
161h		B0h	Bit 31 = Read SFDP 8D-8D-8D command supported = 1b Bit 30 = Read Fast Wrapped command not supported = 0b Bit 29 = Setup Read Wrap command not supported = 0b Bit 28 = Erase 4 KB command supported = 1b Bit 27 = Erase 32 KB command not supported = 0b Bit 26 = Erase Chip command supported = 1b Bit 25 = Read Configuration Register command not supported = 0b Bit 24 = Read Flag Status Register command supported = 1b Bit 23 = Read Register command supported = 1b Bit 22 = Read Volatile Register command not supported = 0b Bit 21 = Read NV Register command not supported = 0b Bit 20 = Write Status-Configuration Register command not supported = 0b Bit 19 = Clear Flag Status Reg command supported = 1b Bit 18 = Write Register command supported = 1b Bit 17 = Write volatile register command not supported = 0b Bit 16 = Write NV register command not supported = 0b Bit 15 = Enter Deep Power Down command not supported = 1b Bit 14 = Exit Deep Power Down command not supported = 0b Bit 13 = Soft Reset command supported = 1b Bit 12 = Reset Enable command supported = 1b Bit 11 = Soft Reset and Enter default protocol mode command supported = 0b Bit 10 = Enter default protocol mode command not supported = 0b Bits 9:8 = Reserved = 00b
162h		8Ch	
163h		95h	
164h	JEDEC xSPI Profile 1.0 DWORD-4	A8h	Bits 31:12 = 00000h Bits 11:7 = 200 MHz operation: number of dummy cycles required = 23 = 10111b Bit 6:2 = 200 MHz operation: configuration bit pattern to set this number of dummy cycles = 01010b Bits 1:0 = Reserved = 00b
165h		0Bh	
166h		00h	
167h		00h	
168h	JEDEC xSPI Profile 1.0 DWORD-5	0Ch	Bits 31:27 = 166 MHz operation: number of dummy cycles required = 20 = 10100b Bit 26:22 = 166 MHz operation: configuration bit pattern to set this number of dummy cycles = 01000b Bits 21:17 = 133 MHz operation: number of dummy cycles required = 14 = 01110b Bit 16:12 = 133 MHz operation: configuration bit pattern to set this number of dummy cycles = 00101b Bits 11:7 = 100 MHz operation: number of dummy cycles required = 10 = 01010b Bit 6:2 = 100 MHz operation: configuration bit pattern to set this number of dummy cycles = 00011b Bits 1:0 = Reserved = 00b
169h		55h	
16Ah		1Ch	
16Bh		A2h	
16Ch	Status, Control and Configuration Register Map DWORD-1	00h	Bits 31:0 = Address offset for volatile registers = 00800000h
16Dh		00h	
16Eh		80h	
16Fh		00h	
170h	Status, Control and Configuration Register Map DWORD-2	00h	Bits 31:0 = Address offset for nonvolatile registers = 00000000h
171h		00h	
172h		00h	
173h		00h	
174h	Status, Control and Configuration Register Map DWORD-3	C0h	Bit 31 = Generic Addressable Read Status/Control register command for volatile registers supported for some (or all) registers = 1b Bit 30 = Generic Addressable Write Status/Control register command for volatile registers supported for some (or all) registers = 1b Bits 29:28 = Number of address bytes used for Generic Addressable Read/Write Status/Control register commands for volatile registers = 3 byte (default) = 10b Bit 27:26 = Number of dummy bytes used for Generic Addressable Read Status/Control register command for volatile registers in (1S-1S-1S) mode = 10b Bit 25:14 = Not supported = FFFh Bit 13:10 = Number of dummy cycles used for Generic Addressable Read Status/Control register command for volatile registers in (8S-8S-8S) mode = 3 = 0011b Bit 9:6 = Number of dummy cycles used for Generic Addressable Read Status/Control register command for volatile registers in (8D-8D-8D) mode = 3 = 0011b Bit 5:4 = Reserved = 00b Bit 3:0 = Number of dummy cycles used for Generic Addressable Read Status/Control register command for volatile registers in (1S-1S-1S) mode = 0000b
175h		CCh	
176h		FFh	
177h		EBh	

Table 84. JEDEC SFDP Rev D Parameter Table (Continued)

SFDP Byte Address	SFDP DWORD Name	Data	Description
178h	Status, Control and Configuration Register Map DWORD-4	88h	Bit 31 = Generic Addressable Read Status/Control register command for nonvolatile registers supported for some (or all) registers = 1b Bit 30 = Generic Addressable Write Status/Control register command for nonvolatile registers supported for some (or all) registers = 1b Bits 29:28 = Number of address bytes used for Generic Addressable Read/Write Status/Control register commands for nonvolatile registers = 3 byte (default) = 10b Bit 27:26 = Number of dummy bytes used for Generic Addressable Read Status/Control register command for nonvolatile registers in (1S-1S-1S) mode = 10b Bit 25:14 = Not supported = FFFh Bit 13:10 = Number of dummy cycles used for Generic Addressable Read Status/Control register command for nonvolatile registers in (8S-8S-8S) mode = 20 = 1110b (Max available option is 14 cycles) Bit 9:6 = Number of dummy cycles used for Generic Addressable Read Status/Control register command for nonvolatile registers in (8D-8D-8D) mode = 20 = 1110b (Max available option is 14 cycles) Bit 5:4 = Reserved = 00b Bit 3:0 = Number of dummy cycles used for Generic Addressable Read Status/Control register command for nonvolatile registers in (1S-1S-1S) mode = 1000b
179h		FBh	
17Ah		FFh	
17Bh		EBh	
17Ch	Status, Control and Configuration Register Map DWORD-5	00h	Bits 7:0 = Command used for write access = read only = 00h
17Dh		65h	Bits 15:8 = Command used for read access = 65h
17Eh		00h	Bits 23:16 = Address of register where WIP is located = 00h (status reg -1 volatile)
17Fh		90h	Bit 31 = Write In Progress (WIP) bit is supported = 1b Bit 30 = Write In Progress polarity, WIP = 1 indicates write is in progress = 0b Bits 29 = Reserved = 0b Bits 28 = Bit is set /cleared by commands using address = 1b Bit 27 = Not supported = 0b Bits 26:24 = Bit location of WIP bit in register = bit [0] = 000b
180h	Status, Control and Configuration Register Map DWORD-6	06h	Bits 7:0 = Command used for write access
181h		05h	Bits 15:8 = Command used for read access
182h		00h	Bits 23:16 = Address of register where WEL is located = 00h (status reg -1 volatile)
183h		A1h	Bit 31 = Write Enable (WEL) bit is supported = 1b Bit 30 = Write Enable polarity, WEL = 1 means write is in progress = 0b Bits 29 = Write command is a direct command to wet WEL bit = 1b Bits 28 = Bit is accessed by direct commands to set WEL bit = 1b Bit 27 = Local address for WEL bit is found in last byte of the address = 0b Bits 26:24 = Bit location of WEL bit in register = bit [1] = 001b
184h	Status, Control and Configuration Register Map DWORD-7	00h	Bits 7:0 = Command used for write access = read only = 00h = Read Only
185h		65h	Bits 15:8 = Command used for read access = 65h
186h		00h	Bits 23:16 = Address of register where Program Error is located = 00h (status reg -1 volatile)
187h		96h	Bit 31 = Program Error bit supported = 1b Bit 30 = Positive polarity (Program Error = 0 indicates no error, Program Error = 1 indicates last Program operation created an error) = 0b Bit 29 = The device has separate bits for Program Error and Erase Error = 0b Bits 28 = Bit is set/cleared by commands using address = 1b Bit 27 = Not Supported = 0b Bits 26:24 = Bit location of Program Error bit in register = bit [6] = 110b
188h	Status, Control and Configuration Register Map DWORD-8	00h	Bits 7:0 = Command used for write access = read only = 00h = Read Only
189h		65h	Bits 15:8 = Command used for read access = 65h
18Ah		00h	Bits 23:16 = Address of register where Erase Error is located = 00h
18Bh		95h	Bit 31 = Erase Error bit supported = 1b Bit 30 = Positive polarity Erase Error = 0 indicates no error, Erase Error = 1 indicates last erase operation created an error) = 0b Bit 29 = The device has separate bits for Program Error and Erase Error = 0b Bits 28 = Bit is set/cleared by commands using address = 1b Bit 27 = Not Supported = 0b Bits 26:24 = Bit location of erase Error bit in register = bit [5] = 101b
18Ch	Status, Control and Configuration Register Map DWORD-9	71h	Bits 7:0 = Command used for write access = read only = 71h
18Dh		65h	Bits 15:8 = Command used for read access = 65h
18Eh		04h	Address of register where wait states bits are located = 04h (Configuration Reg - 3 volatile)
18Fh		97h	Bit 31 = Variable number of dummy cycles supported = 1b Bits 30:29 = Number of physical bits used to set wait states - 2 bit = 00b Bits 28 = Bit is set/cleared by commands using address = 1b Bit 27 = Not Supported = 0b Bits 26:24 = Bit location of LSB of physical bits in register = bit [7] = 111b

Table 84. JEDEC SFDP Rev D Parameter Table (Continued)

SFDP Byte Address	SFDP DWORD Name	Data	Description
190h	Status, Control and Configuration Register Map DWORD-10	71h	Bits 7:0 = Command used for write access = 71h
191h		65h	Bits 15:8 = Command used for read access = 65h
192h		03h	Address of register where wait states bits are located = 03h (Configuration Reg - 2 nonvolatile)
193h		D0h	Bit 31 = Variable number of dummy cycles supported = 1b Bits 30:29 = Number of physical bits used to set wait states - 4 bit = 10b Bits 28 = Bit is set/cleared by commands using address = 1b Bit 27 = Not Supported = 0b Bits 26:24 = Bit location of LSB of physical bits in register = bit [0] = 000b
194h	Status, Control and Configuration Register Map DWORD-11	A4h	Bit 31 = 30 dummy cycles supported = 0b Bit 30:26 = Bit pattern used to set 30 dummy cycles = 00000b Bit 25 = 28 dummy cycles supported = 1b Bit 24:20 = Bit pattern used to set 28 dummy cycles = 01111b Bit 19 = 26 dummy cycles supported = 1b Bit 18:14 = Bit pattern used to set 26 dummy cycles = 01101b Bit 13 = 24 dummy cycles supported = 1b Bit 12:8 = Bit pattern used to set 24 dummy cycles = 01011b Bit 7 = 22 dummy cycles supported = 1b Bit 6:2 = Bit pattern used to set 22 dummy cycles = 01001b Bits 1:0 = Reserved = 00b
195h		6Bh	
196h		FBh	
197h		02h	
198h	Status, Control and Configuration Register Map DWORD-12	90h	Bit 31 = 20 dummy cycles supported = 1b Bit 30:26 = Bit pattern used to set 20 dummy cycles = 01000b Bit 25 = 18 dummy cycles supported = 1b Bit 24:20 = Bit pattern used to set 18 dummy cycles = 00111b Bit 19 = 16 dummy cycles supported = 1b Bit 18:14 = Bit pattern used to set 16 dummy cycles = 00110b Bit 13 = 14 dummy cycles supported = 1b Bit 12:8 = Bit pattern used to set 14 dummy cycles = 00101b Bit 7 = 12 dummy cycles supported = 1b Bit 6:2 = Bit pattern used to set 12 dummy cycles = 00100b Bits 1:0 = Reserved = 00b
199h		A5h	
19Ah		79h	
19Bh		A2h	
19Ch	Status, Control and Configuration Register Map DWORD-13	00h	Bit 31 = 10 dummy cycles supported = 1b Bit 30:26 = Bit pattern used to set 10 dummy cycles = 00011b Bit 25 = 8 dummy cycles supported = 1b Bit 24:20 = Bit pattern used to set 8 dummy cycles = 00010b Bit 19 = 6 dummy cycles supported = 1b Bit 18:14 = Bit pattern used to set 6 dummy cycles = 00001b Bit 13 = 4 dummy cycles supported = 0b Bit 12:8 = Bit pattern used to set 4 dummy cycles = 00000b Bit 7 = 2 dummy cycles supported = 0b Bit 6:2 = Bit pattern used to set 2 dummy cycles = 00000b Bits 1:0 = Reserved = 00b
19Dh		40h	
19Eh		28h	
19Fh		8Eh	
1A0h	Status, Control and Configuration Register Map DWORD-14	00h	Not Supported
1A1h		00h	
1A2h		FFh	
1A3h		00h	
1A4h	Status, Control and Configuration Register Map DWORD-15	00h	Not Supported
1A5h		00h	
1A6h		FFh	
1A7h		00h	
1A8h	Status, Control and Configuration Register Map DWORD-16	71h	Bits 7:0 = Command used for write access = 71h
1A9h		65h	Bits 15:8 = Command used for read access = 65h
1AAh		06h	Bits 23:16 = Address of register where Octal Mode Enable volatile bit is located = 800006h (Configuration Reg - 5 volatile)
1ABh		90h	Bit 31 = Octal Mode Enable volatile bit supported = 1b Bits 30 = Octal Mode Enable volatile bit polarity: Positive (Octal Mode Enable bit = 1 indicates Octal mode is enabled) = 0b Bits 29 = Reserved = 0b Bits 28 = Bit is set/cleared by commands using address = 1b Bit 27 = Not supported = 0b Bits 26:24 = Bit location of Octal Mode enable bit in register = bit [0] = 000b

Table 84. JEDEC SFDP Rev D Parameter Table (Continued)

SFDP Byte Address	SFDP DWORD Name	Data	Description
1ACh	Status, Control and Configuration Register Map DWORD-17	71h	Bits 7:0 = Command used for write access = 71h
1ADh		65h	Bits 15:8 = Command used for read access = 65h
1AEh		06h	Address of register where Octal Mode Enable nonvolatile bit is located = 06h (Configuration Reg - 5 nonvolatile)
1AFh		90h	Bit 31 = Octal Mode Enable nonvolatile bit supported = 1b Bits 30 = Octal Mode Enable nonvolatile bit polarity: Positive (Octal Mode Enable bit = 1 indicates Octal mode is enabled) = 0b Bit 29 = No OTP Bit = 0b Bits 28 = Bit is set/cleared by commands using address = 1b Bit 27 = Not supported = 0b Bits 26:24 = Bit location of Octal Mode enable bit in register = bit [0] = 000b
1B0h	Status, Control and Configuration Register Map DWORD-18	00h	Not Supported
1B1h		00h	
1B2h		00h	
1B3h		00h	
1B4h	Status, Control and Configuration Register Map DWORD-19	00h	Not Supported
1B5h		00h	
1B6h		00h	
1B7h		00h	
1B8h	Status, Control and Configuration Register Map DWORD-20	71h	Bits 7:0 = Command used for write access = 71h
1B9h		65h	Bits 15:8 = Command used for read access = 65h
1BAh		06h	Address of register where STR Octal Mode Enable bit is located = 800006h (Configuration Reg - 5 Volatile)
1BBh		D1h	Bit 31 = STR Octal Mode Enable volatile bit supported = 1b Bits 30 = STR Octal Mode Enable volatile bit polarity: Inverted (STR Octal Mode Enable = 0 indicates STR Octal Mode is enabled) = 1b Bit 29 = Reserved = 0b Bits 28 = Bit is set/cleared by commands using address = 1b Bit 27 = Not supported = 0b Bits 26:24 = Bit location of STR Octal Mode Enable bit in register = bit [1] = 001b
1BCh	Status, Control and Configuration Register Map DWORD-21	71h	Bits 7:0 = Command used for write access = 71h
1BDh		65h	Bits 15:8 = Command used for read access = 65h
1BEh		06h	Address of register where STR Octal Mode Enable bit is located = 06h (Configuration Reg - 5 Nonvolatile)
1BFh		D1h	Bit 31 = STR Octal Mode Enable nonvolatile bit supported = 1b Bits 30 = STR Octal Mode Enable nonvolatile bit polarity: Inverted (STR Octal Mode Enable = 0 indicates STR Octal Mode is enabled) = 1b Bit 29 = No OTP Bit = 0b Bits 28 = Bit is set/cleared by commands using address = 1b Bit 27 = Not supported = 0b Bits 26:24 = Bit location of STR Octal Mode Enable nonvolatile bit in register = bit [1] = 001b
1C0h	Status, Control and Configuration Register Map DWORD-22	71h	Bits 7:0 = Command used for write access = 71h
1C1h		65h	Bits 15:8 = Command used for read access = 65h
1C2h		06h	Address of register where DTR Octal Mode Enable volatile bit is located = 800006h (Configuration Reg - 5 Volatile)
1C3h		91h	Bit 31 = DTR Octal Mode Enable volatile bit supported = 1b Bits 30 = DTR Octal Mode Enable volatile bit polarity positive (DSTR Octal Mode Enable = 1 indicates DTR Octal Mode is enabled) = 0b Bit 29 = Reserved = 0b Bits 28 = Bit is set/cleared by commands using address = 1b Bit 27 = Not supported = 0b Bits 26:24 = Bit location of DTR Octal Mode Enable volatile bit in register = bit [1] = 001b
1C4h	Status, Control and Configuration Register Map DWORD-23	71h	Bits 7:0 = Command used for write access = 71h
1C5h		65h	Bits 15:8 = Command used for read access = 65h
1C6h		06h	Address of register where DTR Octal Mode Enable nonvolatile bit is located = 06h (Configuration Reg - 5 nonvolatile)
1C7h		91h	Bit 31 = DTR Octal Mode Enable nonvolatile bit supported = 1b Bits 30 = DTR Octal Mode Enable nonvolatile bit polarity positive (DSTR Octal Mode Enable = 1 indicates DTR Octal Mode is enabled) = 0b Bit 29 = No OTP Bit = 0b Bits 28 = Bit is set/cleared by commands using address = 1b Bit 27 = Not supported = 0b Bits 26:24 = Bit location of DTR Octal Mode Enable bit in register = bit [1] = 001b

Table 84. JEDEC SFDP Rev D Parameter Table (Continued)

SFDP Byte Address	SFDP DWORD Name	Data	Description
1C8h	Status, Control and Configuration Register Map DWORD-24	00h	Not Supported
1C9h		00h	
1CAh		FFh	
1CBh		00h	
1CCh	Status, Control and Configuration Register Map DWORD-25	00h	Not Supported
1CDh		00h	
1CEh		FFh	
1CFh		00h	
1D0h	Status, Control and Configuration Register Map DWORD-26	71h	Bits 7:0 = Command used for write access = 71h
1D1h		65h	Bits 15:8 = Command used for read access = 65h
1D2h		05h	Address of register where Output Driver Strength volatile bits are located = 800005h (Configuration Reg - 4 Volatile)
1D3h		D7h	Bits 31: 30 = Number of physical bits used to set Output Driver Strength = 3 bits = 11b Bit 29 = Reserved = 0b Bits 28 = Bit is set/cleared by commands using address = 1b Bit 27 = Not Supported = 0b Bits 26:24 = Bit location of Most Significant Output Driver Strength bit in register = bit [7] = 111b
1D4h	Status, Control and Configuration Register Map DWORD-27	71h	Bits 7:0 = Command used for write access = 71h
1D5h		65h	Bits 15:8 = Command used for read access = 65h
1D6h		05h	Address of register where Output Driver Strength nonvolatile bits are located = 05h (Configuration Reg - 4 non- volatile)
1D7h		D7h	Bits 31: 30 = Number of physical bits used to set Output Driver Strength = 3 bits = 11b Bit 29 = Reserved = 0b Bits 28 = Bit is set/cleared by commands using address = 1b Bit 27 = Not Supported = 0b Bits 26:24 = Bit location of Most Significant Output Driver Strength bit in register = bit [7] = 111b
1D8h	Status, Control and Configuration Register Map DWORD-28	00h	Bit 7:0 = Reserved = 00h
1D9h		00h	Bit 15:8 = Reserved = 00h
1DAh		EEh	Bits 31:29 = Bit pattern to support Driver type 0 = 60 Ohms = 011b Bits 28:26 = Bit pattern to support Driver type 1 = 45 Ohms = 100b Bits 25:23 = Bit pattern to support Driver type 2 = 30 Ohms = 101b Bits 22:20 = Bit pattern to support Driver type 3 = 20 Ohms = 110b Bits 19:17 = Bit pattern to support Driver type 4 = 15 Ohms = 111b Bit 16 = Reserved = 0b
1DBh		72h	
1DCh	Command Sequences to Change to Octal DDR (8D-8D-8D) mode DWORD -1	00h	Bits 7:0 = Byte 3 of first command sequence
1DDh		00h	Bits 15:8 = Byte 2 of first command sequence
1DEh		06h	Bits 23:16 = Byte 1 of first command sequence
1DFh		01h	Bits 24:31 = Length of first command sequence = 1 byte
1E0h	Command Sequences to Change to Octal DDR (8D-8D-8D) mode DWORD -2	00h	Bits 7:0 = Byte 7 of first command sequence
1E1h		00h	Bits 15:8 = Byte 6 of first command sequence
1E2h		00h	Bits 23:16 = Byte 5 of first command sequence
1E3h		00h	Bits 24:31 = Byte 4 of first command sequence
1E4h	Command Sequences to Change to Octal DDR (8D-8D-8D) mode DWORD -3	80h	Bits 7:0 = Byte 3 of second command sequence - volatile register address
1E5h		00h	Bits 15:8 = Byte 2 of second command sequence - volatile register address
1E6h		71h	Bits 23:16 = Byte 1 of second command sequence
1E7h		06h	Bits 24:31 = Length of second command sequence = 6 bytes
1E8h	Command Sequences to Change to Octal DDR (8D-8D-8D) mode DWORD -4	00h	Bits 7:0 = Byte 7 of second command sequence
1E9h		03h	Bits 15:8 = Byte 6 of second command sequence
1EAh		06h	Bits 23:16 = Byte 5 of second command sequence - volatile register address
1EBh		00h	Bits 24:31 = Byte 4 of second command sequence - volatile register address

Sector Map Parameter Table Notes

Table 85 provides a means to identify how the device address map is configured and provides a sector map for each supported configuration. This is done by defining a sequence of commands to read out the relevant configuration register bits that affect the selection of an address map. When more than one configuration bit must be read, all the bits are concatenated into an index value that is used to select the current address map.

To identify the sector map configuration in device the following configuration bits are read in the following MSb to LSb order to form the configuration map index value:

- CFR3N[3] - 0 = Hybrid Architecture, 1 = Uniform Architecture
- CFR1N[2] - 0 = 4-KB parameter sectors at bottom, 1 = 4-KB sectors at top
- CFR1N[6] - 0 = 4-KB parameter grouped together, 1 = 4-KB sectors split between bottom and top
- The value of some configuration bits may make other configuration bit values not relevant (don't care), hence not all possible combinations of the index value define valid address maps. Only selected configuration bit combinations are supported by the SFDP Sector Map Parameter table (see Table 86). Other combinations must not be used in configuring the sector address map when using this SFDP parameter table to determine the sector map. The following index value combinations are supported.

Table 85. Sector Map Parameter

CFR3N[3]	CFR1N[2]	CFR1N[6]	Index Value	Description
0	0	0	00h	4-KB sectors at bottom with remainder 256-KB sectors
0	1	0	03h	4-KB sectors at top with remainder 256-KB sectors
0	X	1	01h	4-KB sectors split between top and bottom with remainder 256-KB sectors
1	X	X	04h	Uniform 256-KB sectors

Table 86. JEDEC SFDP Rev D, Sector Map Parameter Table

SFDP Byte Address	SFDP DWORD Name	Data	Description
1ECh	JEDEC Sector Map Parameter DWORD-1 Config. Detect-1	FCh	Config. Detect -1 Uniform 256 KB Sectors or Hybrid Sectors Bits 31:24 = Read data mask = 0000_1000b: Select bit 3 of the data byte for UNHYSA value 0 = Hybrid map with 4 KB parameter sectors 1= Uniform map Bits 23:22 = Configuration detection command address length = 11b: Variable length Bits 21:20 = RFU = 11b Bits 19:16 = Configuration detection command latency = 1111b: variable latency Bits 15:8 = Configuration detection instruction = 65h: Read any register Bits 7:2 = RFU = 111111b Bit 1 = Command Descriptor = 0 Bit 0 = Not the end descriptor = 0
1EDh		65h	
1EEh		FFh	
1EFh		08h	
1F0h	JEDEC Sector Map Parameter DWORD-2 Config. Detect-1	04h	Bits 31:0 = Address Value Configuration Register 3 (bit 3) = 00800004h
1F1h		00h	
1F2h		80h	
1F3h		00h	
1F4h	JEDEC Sector Map Parameter DWORD-3 Config. Detect-2	FCh	Config. Detect-2 4 KB Hybrid Sectors Split between Top and Bottom Bits 31:24 = Read data mask = 0100_0000b: Select bit 6of the data byte for SP4KBS value 0 = 4 KB parameter sectors are grouped together 1 = 4 KB parameter sectors are split between High and Low Addresses Bits 23:22 = Configuration detection command address length = 11b: Variable length Bits 21:20 = RFU = 11b Bits 19:16 = Configuration detection command latency = 1111b: variable latency Bits 15:8 = Configuration detection instruction = 65h: Read any register Bits 7:2 = RFU = 111111b Bit 1 = Command Descriptor = 0 Bit 0 = Not the end descriptor = 0
1F5h		65h	
1F6h		FFh	
1F7h		40h	
1F8h	JEDEC Sector Map Parameter DWORD-4 Config. Detect-2	02h	Bits 31:0 = Address Value Configuration Register 1 (bit 6)= 00800002h
1F9h		00h	
1FAh		80h	
1FBh		00h	
1FCh	JEDEC Sector Map Parameter DWORD-5 Config. Detect-3	FDh	Config Detect-3 4 KB Hybrid Sectors on Top or Bottom Bits 31:24 = Read data mask = 0000_0100b: Select bit 2 of the data byte for TB4KBS value 0 = 4 KB parameter sectors at bottom 1 = 4 KB parameter sectors at top Bits 23:22 = Configuration detection command address length = 11b: Variable length Bits 21:20 = RFU = 11b Bits 19:16 = Configuration detection command latency = 1111b: variable latency Bits 15:8 = Configuration detection instruction = 65h: Read any register Bits 7:2 = RFU = 111111b Bit 1 = Command Descriptor = 0 Bit 0 = Not the end descriptor = 1
1FDh		65h	
1FEh		FFh	
1FFh		04h	
200h	JEDEC Sector Map Parameter DWORD-6 Config. Detect-3	02h	Bits 31:0 = Address Value Configuration Register 1 (bit 2)= 00800002h
201h		00h	
202h		80h	
203h		00h	
204h	JEDEC Sector Map Parameter DWORD-7 Config-0 Header	FEh	Configuration Index 00h 4 KB sectors at bottom with remainder 256 KB Bits 31:24 = RFU = FFh Bits 23:16 = Region count (DWORDs -1) = 02h: Three regions Bits 15:8 = Configuration ID = 00h, 4 KB sectors bottom with remainder 256 KB Bits 7:2 = RFU = 111111b Bit 1 = Map Descriptor = 1 Bit 0 = Not the end descriptor = 0
205h		00h	
206h		02h	
207h		FFh	

Table 86. JEDEC SFDP Rev D, Sector Map Parameter Table (Continued)

SFDP Byte Address	SFDP DWORD Name	Data	Description
208h	JEDEC Sector Map Parameter DWORD-8 Config-0 Region-0	F1h	Region 0 of 4 KB sectors Bits 31:8 = Region size (32 4 KB) = 0001F3h: Region size as count-1 of 256 Byte units = 32 x 4 KB sectors = 128 KB Count = 128 KB/256 = 500, value = count -1 = 500-1 = 499 = 1F3h Bits 7:4 = RFU = Fh Erase Type not supported = 0 / supported = 1 Bit 3 = Erase Type 4 support = 0b ---Erase Type 4 is not defined Bit 2 = Erase Type 3 support = 0b ---Erase Type 3 is 256 KB erase and is not supported in the 4 KB sector region Bit 1 = Erase Type 2 support = 0b ---Erase Type 2 is 64 KB erase and is not supported Bit 0 = Erase Type 1 support = 1b ---Erase Type 1 is 4 KB erase and is supported in the 4 KB sector region
209h		F3h	
20Ah		01h	
20Bh		00h	
20Ch	JEDEC Sector Map Parameter DWORD-9 Config-0 Region-1	F8h	Region 1 of 128 KB sector Bits 31:8 = Region size = 0001F3h: Region size as count-1 of 256 Byte units = 1 x 128 KB sectors = 128 KB Count = 128 KB/256 = 500, value = count -1 = 500-1 = 499 = 1F3h Bits 7:4 = RFU = Fh Erase Type not supported = 0 / supported = 1 Bit 3 = Erase Type 4 support = 1b ---Erase Type 4 is 256 KB erase and is supported in the 128 KB sector region Bit 2 = Erase Type 3 support = 0b ---Erase Type 3 is not defined Bit 1 = Erase Type 2 support = 0b ---Erase Type 2 is not defined Bit 0 = Erase Type 1 support = 0b --- Erase Type 1 is 4 KB erase and is not supported in the 4 KB sector region
20Dh		F3h	
20Eh		01h	
20Fh		00h	
210h	JEDEC Sector Map Parameter DWORD-10 Config-0 Region-2	F8h	Region 2 Uniform 256 KB sectors Bits 31:8 = 512 Mb device Region size = 03E417h: Region size as count-1 of 256 Byte units = 255 x 256 KB sectors = 65,280KB Count = 65,280KB/256 = 255,000 value = count -1 = 255,000-1 = 254,999= 3E417h Bits 31:8 = 1 Gb device Region size = 01FEFFh: Region size as count-1 of 256 Byte units = 511 x 256 KB sectors = 130,816 KB Count = 130,816 KB/256 = 511,000, value = count -1 = 511,000-1 = 510,999 = 7CC17h Bits 7:4 = RFU = Fh Erase Type not supported = 0 / supported = 1 Bit 3 = Erase Type 4 support = 1b ---Erase Type 4 is 256 KB erase and is supported in the 256 KB sector region Bit 2 = Erase Type 3 support = 0b ---Erase Type 3 is not defined Bit 1 = Erase Type 2 support = 0b ---Erase Type 2 is not defined Bit 0 = Erase Type 1 support = 0b --- Erase Type 1 is 4 KB erase and is not supported in the 256 KB sector region
211h		17h	
212h		E4h(512 Mb) CCh (1 Gb)	
213h		03h (512 Mb) 07h (1 Gb)	
214h	JEDEC Sector Map Parameter DWORD-11 Config-3 Header	FEh	Configuration Index 03h 4 KB sectors at Top with remainder 256 KB Bits 31:24 = RFU = FFh Bits 23:16 = Region count (DWORDs -1) = 02h: Three regions Bits 15:8 = Configuration ID = 03h: 4 KB sectors at top with remainder 256 KB sectors Bits 7:2 = RFU = 111111b Bit 1 = Map Descriptor = 1 Bit 0 = Not the end descriptor = 0
215h		03h	
216h		02h	
217h		FFh	
218h	JEDEC Sector Map Parameter DWORD-12 Config-3 Region-0	F8h	Region 0 Uniform 256 KB sectors Bits 31:8 = 512 Mb device Region size = 03E417h: Region size as count-1 of 256 Byte units = 255 x 256 KB sectors = 65,280KB Count = 65,280KB/256 = 255,000 value = count -1 = 255,000-1 = 254,999 = 3E417h Bits 31:8 = 1 Gb device Region size = 01FEFFh: Region size as count-1 of 256 Byte units = 511 x 256 KB sectors = 130,816KB Count = 130,816 KB/256 = 511,000, value = count -1 = 511,000-1 = 510,999 = 7CC17h Bits 7:4 = RFU = Fh Erase Type not supported = 0 / supported = 1 Bit 3 = Erase Type 4 support = 1b ---Erase Type 4 is 256 KB erase and is supported in the 256 KB sector region Bit 2 = Erase Type 3 support = 0b ---Erase Type 3 is not defined Bit 1 = Erase Type 2 support = 0b ---Erase Type 2 is not defined Bit 0 = Erase Type 1 support = 0b ---Erase Type 1 is 4 KB erase and is not supported in the 256 KB sector region
219h		17h	
21Ah		E4h(512 Mb) CCh (1 Gb)	
21Bh		03h (512 Mb) 07h (1 Gb)	

Table 86. JEDEC SFDP Rev D, Sector Map Parameter Table (Continued)

SFDP Byte Address	SFDP DWORD Name	Data	Description
21Ch	JEDEC Sector Map Parameter DWORD-13 Config-3 Region-1	F8h	Region 1 of 128 KB sector Bits 31:8 = Region size = 0001F3h: Region size as count-1 of 256 Byte units = 1 x 128 KB sectors = 128 KB Count = 128 KB/256 = 500, value = count -1 = 500-1 = 499 = 1F3hBits 7:4 = RFU = Fh Erase Type not supported = 0 / supported = 1 Bit 3 = Erase Type 4 support = 1b ---Erase Type 4 is 256 KB erase and is supported in the 128 KB sector region Bit 2 = Erase Type 3 support = 0b ---Erase Type 3 is not defined Bit 1 = Erase Type 2 support = 0b ---Erase Type 2 is not defined Bit 0 = Erase Type 1 support = 0b ---Erase Type 1 is 4 KB erase and is not supported in the 4 KB sector region
21Dh		F3h	
21Eh		01h	
21Fh		00h	
220h	JEDEC Sector Map Parameter DWORD-14 Config-3 Region-2	F1h	Region 2 of 4 KB sectors Bits 31:8 = Region size (32 4 KB) = 0001F3h: Region size as count-1 of 256 Byte units = 32 x 4 KB sectors = 128 KB Count = 128 KB/256 = 500, value = count -1 = 500-1 = 499 = 1F3h Bits 7:4 = RFU = Fh Erase Type not supported = 0 / supported = 1 Bit 3 = Erase Type 4 support = 0b ---Erase Type 4 is not defined Bit 2 = Erase Type 3 support = 0b ---Erase Type 3 is 256 KB erase and is not supported in the 4 KB sector region Bit 1 = Erase Type 2 support = 0b ---Erase Type 2 is 64 KB erase and is not supported Bit 0 = Erase Type 1 support = 1b ---Erase Type 1 is 4 KB erase and is supported in the 4 KB sector region
221h		F3h	
222h		01h	
223h		00h	
224h	JEDEC Sector Map Parameter DWORD-15 Config-1 Header	FEh	Configuration Index 01h 4 KB sectors split between Bottom and Top with remainder 256 KB Bits 31:24 = RFU = FFh Bits 23:16 = Region count (DWORDs -1) = 04h: Five regions Bits 15:8 = Configuration ID = 01h: 4 KB sectors split between bottom and top with remainder 256 KB sectors Bits 7:2 = RFU = 111111b Bit 1 = Map Descriptor = 1 Bit 0 = Not the end descriptor = 0
225h		01h	
226h		04h	
227h		FFh	
228h	JEDEC Sector Map Parameter DWORD-16 Config-1 Region-0	F1h	Region 0 of 4 KB sectors Bits 31:8 = Region size (32 4 KB) = 0001F3h: Region size as count-1 of 256 Byte units = 32 x 4 KB sectors = 128 KB Count = 128 KB/256 = 500, value = count -1 = 500-1 = 499 = 1F3h Bits 7:4 = RFU = Fh Erase Type not supported = 0 / supported = 1 Bit 3 = Erase Type 4 support = 0b ---Erase Type 4 is not defined Bit 2 = Erase Type 3 support = 0b ---Erase Type 3 is 256 KB erase and is not supported in the 4 KB sector region Bit 1 = Erase Type 2 support = 0b ---Erase Type 2 is 64 KB erase and is not supported Bit 0 = Erase Type 1 support = 1b ---Erase Type 1 is 4 KB erase and is supported in the 4 KB sector region
229h		F3h	
22Ah		01h	
22Bh		00h	
22Ch	JEDEC Sector Map Parameter DWORD-17 Config-1 Region-1	F8h	Region 1 of 192 KB sector Bits 31:8 = Region size = 0002EDh: Region size as count-1 of 256 Byte units = 1 x 192 KB sectors = 192 KB Count = 192 KB/256 = 750, value = count -1 = 750-1 = 749 = 2EDh Bits 7:4 = RFU = Fh Erase Type not supported = 0 / supported = 1 Bit 3 = Erase Type 4 support = 1b ---Erase Type 4 is 256 KB erase and is supported in the 192 KB sector region Bit 2 = Erase Type 3 support = 0b ---Erase Type 3 is not defined Bit 1 = Erase Type 2 support = 0b ---Erase Type 2 is not defined Bit 0 = Erase Type 1 support = 0b --- Erase Type 1 is 4 KB erase and is not supported in the 4 KB sector region
22Dh		EDh	
22Eh		02h	
22Fh		00h	
230h	JEDEC Sector Map Parameter DWORD-18 Config-1 Region-2	F8h	Region 2 Uniform 256 KB sectors Bits 31:8 = 512 Mb device Region size = 03E02Fh: Region size as count-1 of 256 Byte units = 254 x 256 KB sectors = 65,024 KB Count = 65,024 KB/256 = 254,000 value = count -1 = 254,000-1 = 253,999 = 3E02Fh Bits 31:8 = 1 Gb device Region size = 07C82Fh: Region size as count-1 of 256 Byte units = 510 x 256 KB sectors = 130,560 KB Count = 130,560 KB/256 = 510,000, value = count -1 = 510,000-1 = 509,999 = 7C82Fh Bits 7:4 = RFU = Fh Erase Type not supported = 0 / supported = 1 Bit 3 = Erase Type 4 support = 1b ---Erase Type 4 is 256 KB erase and is supported in the 256 KB sector region Bit 2 = Erase Type 3 support = 0b ---Erase Type 3 is not defined Bit 1 = Erase Type 2 support = 0b ---Erase Type 2 is not defined Bit 0 = Erase Type 1 support = 0b ---Erase Type 1 is 4 KB erase and is not supported in the 256 KB sector region
231h		2Fh	
232h		E0h (512 Mb) C8h (1 Gb)	
233h		03h (512 Mb) 07h (1 Gb)	

Table 86. JEDEC SFDP Rev D, Sector Map Parameter Table (Continued)

SFDP Byte Address	SFDP DWORD Name	Data	Description
234h	JEDEC Sector Map Parameter DWORD-19 Config-1 Region-3	F8h	Region 3of 192 KB sector Bits 31:8 = Region size = 0002EDh: Region size as count-1 of 256 Byte units = 1 x 192 KB sectors = 192 KB Count = 192 KB/256 = 750, value = count -1 = 750-1 = 749 = 2EDh Bits 7:4 = RFU = Fh Erase Type not supported = 0 / supported = 1 Bit 3 = Erase Type 4 support = 1b ---Erase Type 4 is 256 KB erase and is supported in the 192 KB sector region Bit 2 = Erase Type 3 support = 0b ---Erase Type 3 is not defined Bit 1 = Erase Type 2 support = 0b ---Erase Type 22 is not defined Bit 0 = Erase Type 1 support = 0b ---Erase Type 1 is 4 KB erase and is not supported in the 4 KB sector region
235h		EDh	
236h		02h	
237h		00h	
238h	JEDEC Sector Map Parameter DWORD-20 Config-1 Region-5	F1h	Region 5 of 4 KB sectors Bits 31:8 = Region size (32 4 KB) = 0001F3h: Region size as count-1 of 256 Byte units = 32 x 4 KB sectors = 128 KB Count = 128 KB/256 = 500, value = count -1 = 500-1 = 499 = 1F3h Bits 7:4 = RFU = Fh Erase Type not supported = 0 / supported = 1 Bit 3 = Erase Type 4 support = 0b ---Erase Type 4 is not defined Bit 2 = Erase Type 3 support = 0b ---Erase Type 3 is 256 KB erase and is not supported in the 4 KB sector region Bit 1 = Erase Type 2 support = 0b ---Erase Type 2 is 64 KB erase and is not supported Bit 0 = Erase Type 1 support = 1b ---Erase Type 1 is 4 KB erase and is supported in the 4 KB sector region
239h		F3h	
23Ah		01h	
23Bh		00h	
23Ch	JEDEC Sector Map Parameter DWORD-21 Config-4 Header	FFh	Configuration Index 04h Uniform 256 KB sectors Bits 31:24 = RFU = FFh Bits 23:16 = Region count (DWORDs -1) = 00h: One region Bits 15:8 = Configuration ID = 04h: Uniform 256 KB sectors Bits 7:2 = RFU = 111111b Bit 1 = Map Descriptor = 1 Bit 1= Not the end descriptor = 0
23Dh		04h	
23Eh		00h	
23Fh		FFh	
240h	JEDEC Sector Map Parameter DWORD-22 Config-4 Region-0	F8h	Region 0 Uniform 256 KB sectors Bits 31:8 = 512 Mb device Region size = 03E7FFh: Region size as count-1 of 256 Byte units = 256 x 256 KB sectors = 65,536KB Count = 65,280KB/256 = 256,000 value = count -1 = 256,000-1 = 255,999= 3E7FFh Bits 31:8 = 1 Gb device Region size = 07CFFFh: Region size as count-1 of 256 Byte units = 512 x 256 KB sectors = 131,072 KB Count = 131,072 KB/256 = 512,000, value = count -1 = 512,000-1 = 511,999 = 7CFFFh Bits 7:4 = RFU = Fh Erase Type not supported = 0 / supported = 1 Bit 3 = Erase Type 4 support = 1b ---Erase Type 4 is 256 KB erase and is supported in the 256 KB sector region Bit 2 = Erase Type 3 support = 0b ---Erase Type 3 is not defined Bit 1 = Erase Type 2 support = 0b ---Erase Type 2 is not defined Bit 0 = Erase Type 1 support = 0b ---Erase Type 1 is 4 KB erase and is not supported in the 256 KB sector region
241h		FFh	
242h		E7h(512 Mb) CFh (1 Gb)	
243h		03h (512 Mb) 07h (1 Gb)	

9.2 Manufacturer and Device ID

Table 87. Manufacturer and Device ID

Byte Address	Data	Description
00h	34h	Manufacturer ID for Cypress
01h	5Ah (HL-T) / 5Bh (HS-T)	Device ID MSB - Memory Interface Type
02h	19h (256 Mb) / 1Ah (512 Mb) / 1Bh (1 Gb)	Device ID LSB - Density
03h	0Fh	ID Length - number bytes following. Adding this value to the current location of 03h gives the address of the last valid location in the ID legacy address map.
04h	03h (Default Configuration)	Physical Sector Architecture The HL-T/HS-T family may be configured with or without 4 KB parameter sectors in addition to the uniform sectors. 03h = Uniform 256 KB with thirty-two 4 KB Parameter Sectors)
05h	90h (HL-T/HS-T Family)	Family ID
06h - 0Fh	FFh	Reserved

9.3 Unique Device ID

Table 88. Unique Device ID

Byte Address	Data	Description
00h to 07h	8-Byte Unique Device ID	64-bit unique ID number

10. Package Diagrams

Figure 78. Ball Grid Array 24-ball 6 × 8 mm (VAA024)

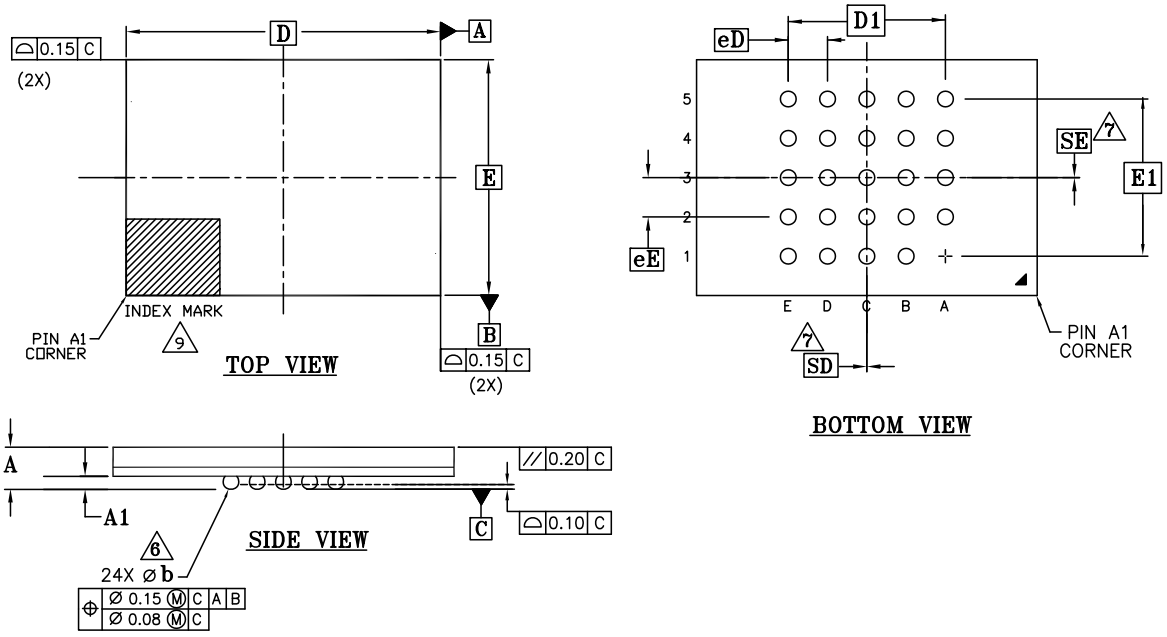

SYMBOL	DIMENSIONS		
	MIN.	NOM.	MAX.
A	-	-	1.00
A1	0.20	-	-
D		8.00 BSC	
E		6.00 BSC	
D1		4.00 BSC	
E1		4.00 BSC	
MD		5	
ME		5	
N		24	
⌀ b	0.35	0.40	0.45
eE		1.00 BSC	
eD		1.00 BSC	
SD		0.00 BSC	
SE		0.00 BSC	

NOTES:

1. DIMENSIONING AND TOLERANCING METHODS PER ASME Y14.5M-1994.
2. ALL DIMENSIONS ARE IN MILLIMETERS.
3. BALL POSITION DESIGNATION PER JEP95, SECTION 3, SPP-020.
4. "e" REPRESENTS THE SOLDER BALL GRID PITCH.
5. SYMBOL "MD" IS THE BALL MATRIX SIZE IN THE "D" DIRECTION.
   SYMBOL "ME" IS THE BALL MATRIX SIZE IN THE "E" DIRECTION.
   N IS THE NUMBER OF POPULATED SOLDER BALL POSITIONS FOR MATRIX SIZE MD X ME.
6. DIMENSION "b" IS MEASURED AT THE MAXIMUM BALL DIAMETER IN A PLANE PARALLEL TO DATUM C.
7. "SD" AND "SE" ARE MEASURED WITH RESPECT TO DATUMS A AND B AND DEFINE THE POSITION OF THE CENTER SOLDER BALL IN THE OUTER ROW.
   WHEN THERE IS AN ODD NUMBER OF SOLDER BALLS IN THE OUTER ROW "SD" OR "SE" = 0.
   WHEN THERE IS AN EVEN NUMBER OF SOLDER BALLS IN THE OUTER ROW, "SD" = eD/2 AND "SE" = eE/2.
8. "+" INDICATES THE THEORETICAL CENTER OF DEPOPULATED BALLS.
9. A1 CORNER TO BE IDENTIFIED BY CHAMFER, LASER OR INK MARK, METALLIZED MARK INDENTATION OR OTHER MEANS.
10. JEDEC SPECIFICATION NO. REF: N/A

002-15550 *A

Figure 79. Ball Grid Array 24-ball 8 × 8 mm (VAC024)

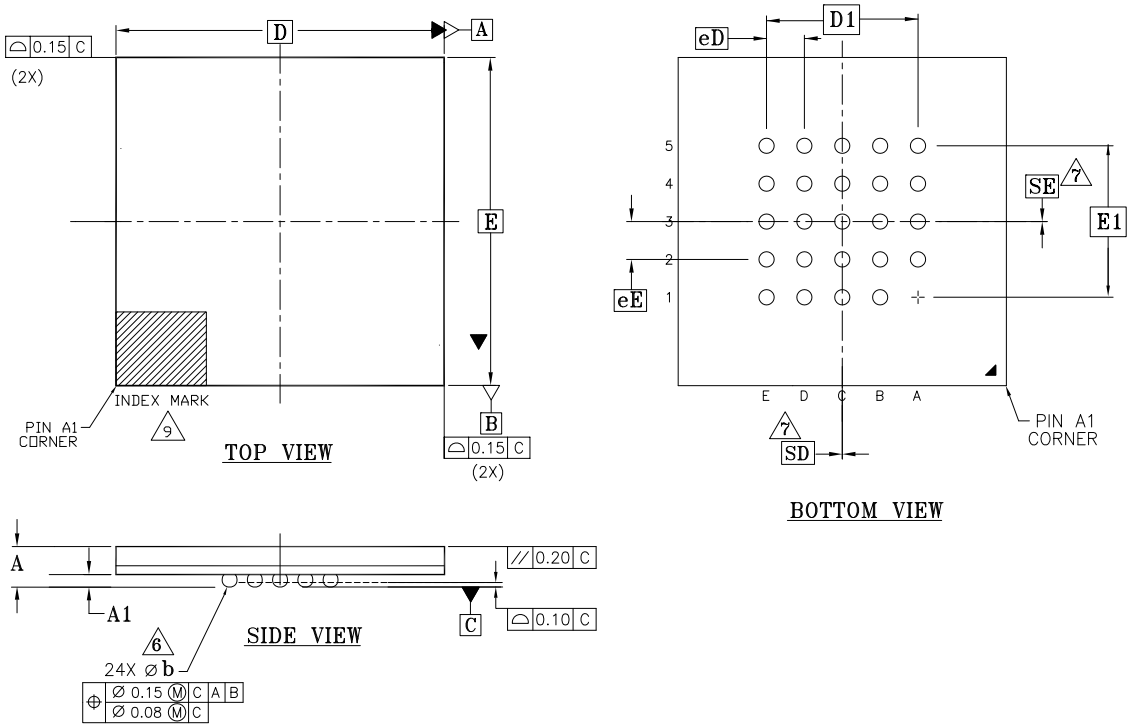

SYMBOL	DIMENSIONS		
	MIN.	NOM.	MAX.
A	-	-	1.00
A1	0.20	-	-
D		8.00 BSC	
E		8.00 BSC	
D1		4.00 BSC	
E1		4.00 BSC	
MD		5	
ME		5	
N		24	
∅ b	0.35	0.40	0.45
eE		1.00 BSC	
eD		1.00 BSC	
SD		0.00 BSC	
SE		0.00 BSC	

NOTES:

1. DIMENSIONING AND TOLERANCING METHODS PER ASME Y14.5M-1994.
2. ALL DIMENSIONS ARE IN MILLIMETERS.
3. BALL POSITION DESIGNATION PER JEP95, SECTION 3, SPP-020.
4. "e" REPRESENTS THE SOLDER BALL GRID PITCH.
5. SYMBOL "MD" IS THE BALL MATRIX SIZE IN THE "D" DIRECTION.
   SYMBOL "ME" IS THE BALL MATRIX SIZE IN THE "E" DIRECTION.
   N IS THE NUMBER OF POPULATED SOLDER BALL POSITIONS FOR MATRIX SIZE MD X ME.
6. DIMENSION "b" IS MEASURED AT THE MAXIMUM BALL DIAMETER IN A PLANE PARALLEL TO DATUM C.
7. "SD" AND "SE" ARE MEASURED WITH RESPECT TO DATUMS A AND B AND DEFINE THE POSITION OF THE CENTER SOLDER BALL IN THE OUTER ROW.
   WHEN THERE IS AN ODD NUMBER OF SOLDER BALLS IN THE OUTER ROW "SD" OR "SE" = 0.
   WHEN THERE IS AN EVEN NUMBER OF SOLDER BALLS IN THE OUTER ROW, "SD" = eD/2 AND "SE" = eE/2.
8. "+" INDICATES THE THEORETICAL CENTER OF DEPOPULATED BALLS.
9. A1 CORNER TO BE IDENTIFIED BY CHAMFER, LASER OR INK MARK, METALLIZED MARK INDENTATION OR OTHER MEANS.
10. JEDEC SPECIFICATION NO. REF: N/A

002-22282 **

11. Ordering Information

The ordering part number is formed by a valid combination of the following:

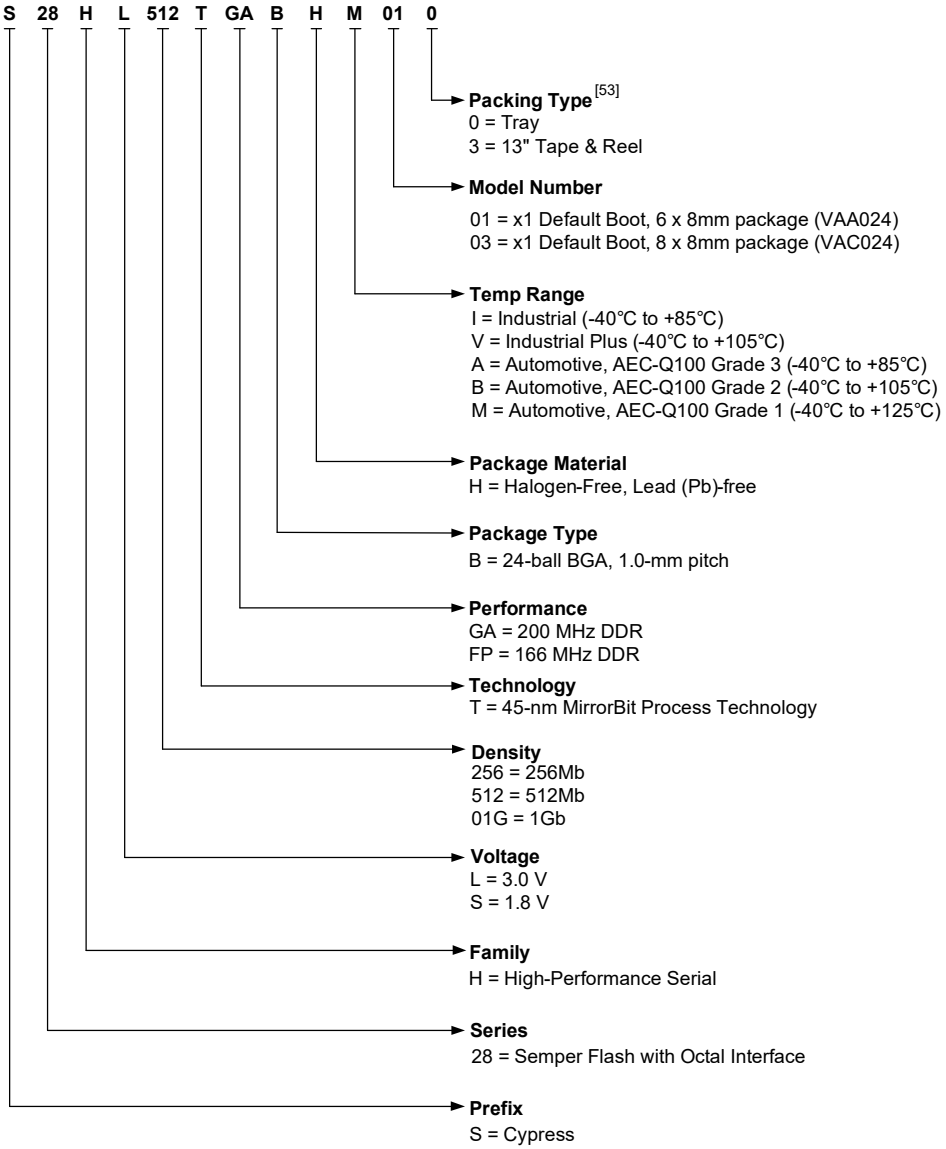

Note
53. See Packing and Packaging Handbook on www.cypress.com for further information.

11.1 Valid Combinations — Standard Grade

Valid Combinations list configurations planned to be supported in volume for this device. Contact your local sales office to confirm availability of specific valid combinations and to check on newly released combinations.

Table 89. Valid Combinations — Standard Grade

Base Ordering Part Number	Speed Option	Package and Materials	Temperature Range	Model Number	Packing Type	Ordering Part Number (x = Packing Type)	Package Marking
S28HL512T	FP	BH	V	01	0, 3	S28HL512TFPBHV01x	28HL512TPV01
S28HS512T	GA	BH	V	01	0, 3	S28HS512TGABHV01x	28HS512TAV01
S28HL01GT	FP	BH	I, V	03	0, 3	S28HL01GTFPBHI03x	28HL01GTPI03
						S28HL01GTFPBHV03x	28HL01GTPV03
S28HS01GT	GA	BH	I, V	03	0, 3	S28HS01GTGABHI03x	28HS01GTAI03
						S28HS01GTGABHV03x	28HS01GTAV03

Table 90. Valid Combinations — Standard Grade (In Production)

Base Ordering Part Number	Speed Option	Package and Materials	Temperature Range	Model Number	Packing Type	Ordering Part Number (x = Packing Type)	Package Marking
S28HL512T	FP	BH	I	01	0, 3	S28HL512TFPBHI01x	28HL512TPI01
S28HS512T	GA	BH	I	01	0, 3	S28HS512TGABHI01x	28HS512TAI01

11.2 Valid Combinations — Automotive Grade / AEC-Q100

Table 91 lists configurations that are Automotive Grade / AEC-Q100 qualified and are planned to be available in volume. The table will be updated as new combinations are released. Contact your local sales representative to confirm availability of specific combinations and to check on newly released combinations.

Production Part Approval Process (PPAP) support is only provided for AEC-Q100 grade products.

Products to be used in end-use applications that require ISO/TS-16949 compliance must be AEC-Q100 grade products in combination with PPAP. Non–AEC-Q100 grade products are not manufactured or documented in full compliance with ISO/TS-16949 requirements. AEC-Q100 grade products are also offered without PPAP support for end-use applications that do not require ISO/TS-16949 compliance.

Table 91. Valid Combinations — Automotive Grade / AEC-Q100

Base Ordering Part Number	Speed Option	Package and Materials	Temperature Range	Model Number	Packing Type	Ordering Part Number (x = Packing Type)	Package Marking
S28HL512T	FP	BH	A	01	0, 3	S28HL512TFPBHA01x	28HL512TPA01
S28HS512T	GA	BH	A	01	0, 3	S28HS512TGABHA01x	28HS512TAA01
S28HL01GT	FP	BH	A, B, M	03	0, 3	S28HL01GTFPBHA03x	28HL01GTPA03
						S28HL01GTFPBHB03x	28HL01GTPB03
						S28HL01GTFPBHM03x	28HL01GTPM03
S28HS01GT	GA	BH	A, B, M	03	0, 3	S28HS01GTGABHA03x	28HS01GTAA03
						S28HS01GTGABHB03x	28HS01GTAB03
						S28HS01GTGABHM03x	28HS01GTAM03

Table 92. Valid Combinations — Automotive Grade / AEC-Q100 (In Production)

Base Ordering Part Number	Speed Option	Package and Materials	Temperature Range	Model Number	Packing Type	Ordering Part Number (x = Packing Type)	Package Marking
S28HL512T	FP	BH	B, M	01	0, 3	S28HL512TFPBHB01x	28HL512TPB01
						S28HL512TFPBHM01x	28HL512TPM01
S28HS512T	GA	BH	B, M	01	0, 3	S28HS512TGABHB01x	28HS512TAB01
						S28HS512TGABHM01x	28HS512TAM01

12. Document History Page

Document Title: S28HS256T / S28HS512T / S28HS01GT / S28HL256T / S28HL512T / S28HL01GT, 256-Mb (32-MB), 512-Mb (64-MB) 1-Gb (128-MB) HS-T (1.8-V), HL-T (3.0-V) Semper™ Flash with Octal Interface Document Number: 002-18216			
Rev.	**ECN No.**	**Submission Date**	**Description of Change**
*N	6598395	07/03/2019	Finalizing document for S28HS512T and S28HL512T devices description.

Sales, Solutions, and Legal Information

Worldwide Sales and Design Support

Cypress maintains a worldwide network of offices, solution centers, manufacturer's representatives, and distributors. To find the office closest to you, visit us at Cypress Locations.

Products

Arm® Cortex® Microcontrollers	cypress.com/arm
Automotive	cypress.com/automotive
Clocks & Buffers	cypress.com/clocks
Interface	cypress.com/interface
Internet of Things	cypress.com/iot
Memory	cypress.com/memory
Microcontrollers	cypress.com/mcu
PSoC	cypress.com/psoc
Power Management ICs	cypress.com/pmic
Touch Sensing	cypress.com/touch
USB Controllers	cypress.com/usb
Wireless Connectivity	cypress.com/wireless

PSoC® Solutions

PSoC 1 | PSoC 3 | PSoC 4 | PSoC 5LP | PSoC 6 MCU

Cypress Developer Community

Community | Projects | Video | Blogs | Training | Components

Technical Support

cypress.com/support

© Cypress Semiconductor Corporation, 2016-2019. This document is the property of Cypress Semiconductor Corporation and its subsidiaries ("Cypress"). This document, including any software or firmware included or referenced in this document ("Software"), is owned by Cypress under the intellectual property laws and treaties of the United States and other countries worldwide. Cypress reserves all rights under such laws and treaties and does not, except as specifically stated in this paragraph, grant any license under its patents, copyrights, trademarks, or other intellectual property rights. If the Software is not accompanied by a license agreement and you do not otherwise have a written agreement with Cypress governing the use of the Software, then Cypress hereby grants you a personal, non-exclusive, nontransferable license (without the right to sublicense) (1) under its copyright rights in the Software (a) for Software provided in source code form, to modify and reproduce the Software solely for use with Cypress hardware products, only internally within your organization, and (b) to distribute the Software in binary code form externally to end users (either directly or indirectly through resellers and distributors), solely for use on Cypress hardware product units, and (2) under those claims of Cypress's patents that are infringed by the Software (as provided by Cypress, unmodified) to make, use, distribute, and import the Software solely for use with Cypress hardware products. Any other use, reproduction, modification, translation, or compilation of the Software is prohibited.

TO THE EXTENT PERMITTED BY APPLICABLE LAW, CYPRESS MAKES NO WARRANTY OF ANY KIND, EXPRESS OR IMPLIED, WITH REGARD TO THIS DOCUMENT OR ANY SOFTWARE OR ACCOMPANYING HARDWARE, INCLUDING, BUT NOT LIMITED TO, THE IMPLIED WARRANTIES OF MERCHANTABILITY AND FITNESS FOR A PARTICULAR PURPOSE. No computing device can be absolutely secure. Therefore, despite security measures implemented in Cypress hardware or software products, Cypress shall have no liability arising out of any security breach, such as unauthorized access to or use of a Cypress product. CYPRESS DOES NOT REPRESENT, WARRANT, OR GUARANTEE THAT CYPRESS PRODUCTS, OR SYSTEMS CREATED USING CYPRESS PRODUCTS, WILL BE FREE FROM CORRUPTION, ATTACK, VIRUSES, INTERFERENCE, HACKING, DATA LOSS OR THEFT, OR OTHER SECURITY INTRUSION (collectively, "Security Breach"). Cypress disclaims any liability relating to any Security Breach, and you shall and hereby do release Cypress from any claim, damage, or other liability arising from any Security Breach. In addition, the products described in these materials may contain design defects or errors known as errata which may cause the product to deviate from published specifications. To the extent permitted by applicable law, Cypress reserves the right to make changes to this document without further notice. Cypress does not assume any liability arising out of the application or use of any product or circuit described in this document. Any information provided in this document, including any sample design information or programming code, is provided only for reference purposes. It is the responsibility of the user of this document to properly design, program, and test the functionality and safety of any application made of this information and any resulting product. "High-Risk Device" means any device or system whose failure could cause personal injury, death, or property damage. Examples of High-Risk Devices are weapons, nuclear installations, surgical implants, and other medical devices. "Critical Component" means any component of a High-Risk Device whose failure to perform can be reasonably expected to cause, directly or indirectly, the failure of the High-Risk Device, or to affect its safety or effectiveness. Cypress is not liable, in whole or in part, and you shall and hereby do release Cypress from any claim, damage, or other liability arising from any use of a Cypress product as a Critical Component in a High-Risk Device. You shall indemnify and hold Cypress, its directors, officers, employees, agents, affiliates, distributors, and assigns harmless from and against all claims, costs, damages, and expenses, arising out of any claim, including claims for product liability, personal injury or death, or property damage arising from any use of a Cypress product as a Critical Component in a High-Risk Device. Cypress products are not intended or authorized for use as a Critical Component in any High-Risk Device except to the limited extent that (i) Cypress's published data sheet for the product explicitly states Cypress has qualified the product for use in a specific High-Risk Device, or (ii) Cypress has given you advance written authorization to use the product as a Critical Component in the specific High-Risk Device and you have signed a separate indemnification agreement.

Cypress, the Cypress logo, Spansion, the Spansion logo, and combinations thereof, WICED, PSoC, CapSense, EZ-USB, F-RAM, and Traveo are trademarks or registered trademarks of Cypress in the United States and other countries. For a more complete list of Cypress trademarks, visit cypress.com. Other names and brands may be claimed as property of their respective owners.