MOTIX™ TLE9853QX

Arm® Cortex®-M0 Microcontroller with LIN and H-Bridge NFET Driver for Automotive Applications
AD-Step

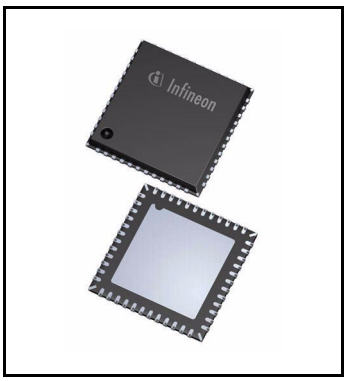

1 Overview

Features

- 32-bit Arm® Cortex®*-M0 Core
  - 40 MHz clock frequency
  - one clock per machine cycle architecture
  - single cycle multiplier
- On-chip memory
  - 48 KB Flash (including EEPROM)
  - 4 KB EEPROM (emulated in Flash)
  - 512 bytes 100 Time Programmable Memory (100TP)
  - 4 KB RAM
  - Boot ROM for startup firmware and Flash routines
- Math Co-Processor Unit with Divider Unit for signed and unsigned 32-bit division operations
- On-chip OSC
- MOSFET Driver including charge pump for H-Bridge motor applications
- Current Sense Amplifier
- High-Side Switch with cyclic sense option and PWM functionality, e.g. for supplying LEDs or switch panels (min. 150 mA)
- 4 High Voltage Monitor Input pins for wake-up and with cyclic sense with analog measurement option
- 10 General-purpose I/O Ports (GPIO)
- 5 Analog input Ports
- 10-Bit A/D Converter with 5 analog inputs + VBAT_SENSE + VS + 4 high voltage monitoring inputs
- 8-Bit A/D Converter with 9 inputs for voltage and temperature supervision
- Measurement unit with 12 channels together with the onboard 10-Bit A/D converter and data post processing
- 16-Bit timers - GPT12, Timer 2 and Timer 21
- Capture/compare unit for PWM signal generation (CCU6)

* Arm and Cortex are registered trademarks of Arm Limited, UK

- 2 full duplex serial interfaces (UART1, UART2), UART1 with LIN support
- 2 synchronous serial channels (SSC1, SSC2)
- On-chip debug support via 2-wire SWD
- 1 LIN 2.2 transceiver
- Single power supply V_S = 5.5 V to 28 V
- Extended supply voltage range V_S = *3 V to 28 V*
- Low-dropout voltage regulators (LDO)
- 5 V voltage supply VDDEXT for external loads (e.g. Hall-sensor)
- Core logic supply at 1.5 V
- Programmable window watchdog (WDT1) with independent on-chip clock source
- Power saving modes:
  - Micro Controller Unit slow-down mode
  - Sleep Mode with cyclic sense option
  - Cyclic wake-up during Sleep Mode
  - Stop Mode with cyclic sense option
- Power-on and undervoltage/brownout reset generator
- Overtemperature protection incl. shutdown
- Short circuit protection for all voltage regulators and actuators (High Side Switch)
- Loss of clock detection with fail safe mode for power switches
- Temperature Range T_j = *-40°C to +150°C*
- Package VQFN-48-31 with LTI feature
- Green package (RoHS compliant)
- AEC Qualified

Potential applications

- Window lift
- Sunroof
- Single-phase DC pumps and fans, e.g. HVAC blower
- Single-phase BLDC pumps and fans, e.g. single-phase water pump
- ... and other LIN addressed motor control applications

Product validation

Qualified for Automotive Applications. Product Validation according to AEC-Q100/101

Description

TLE985x devices integrate an Arm® Cortex®-M0 processor and peripherals for motor control, power supply and communication. Two integrated measurement units (analog-to-digital converters) for monitoring temperature, battery voltage and four monitoring inputs help to save pins. These inputs can be operated directly with battery voltage, which saves costs on additional components such as external voltage dividers or shutdown transistors. Furthermore, the chips are equipped with two full duplex serial interfaces (UART) with LIN support.

Overview

A new feature in the TLE985x family is its adaptive MOSFET driver. The control algorithm is able to compensate MOSFET parameter spread in the system by automatically adjusting the gate current according to required switching times. This allows an optimization of the system concerning EME (electro-magnetic emissions, slow slew rates) as well as power dissipation (short dead times) simultaneously.

The product family includes several devices with different flash sizes (48 - 96KB) and temperature ranges (T_j up to 175°C). In addition, different numbers of half-bridge drivers for uni- or bidirectional DC motor applications are offered.

All TLE985x products are based on the same hardware and software platform as Infineon's other Embedded Power products (TLE984x, TLE986x and TLE987x), thus enabling design synergies and allowing customers to reuse parts of the software. The devices come in a leadless VQFN package with a footprint of 7x7 mm.

Type	Package	Marking
TLE9853QX	VQFN-48-31	TLE9853QX

Table of Contents

1 Overview . . . 1

Features . . . 1

Potential applications . . . 2

Product validation . . . 2

Description . . . 2

Table of Contents . . . 4

2 Block Diagram . . . 9

3 General Device Information . . . 10

3.1 Pin Configurations . . . 10

3.2 Pin Definitions and Functions . . . 11

4 Modes of Operations . . . 14

5 Power Management Unit (PMU) . . . 17

5.1 Features . . . 17

5.2 Introduction . . . 17

5.2.1 Block Diagram . . . 18

5.2.2 PMU Modes Overview . . . 20

5.3 Power Supply Generation (PGU) . . . 21

5.3.1 Voltage Regulator 5.0V (VDDP) . . . 21

5.3.2 Voltage Regulator 1.5V (VDDC) . . . 23

5.3.3 External Voltage Regulator 5.0V (VDDEXT) . . . 24

5.3.4 Power-on Reset Concept . . . 25

6 System Control Unit - Digital Modules (SCU-DM) . . . 26

6.1 Features . . . 26

6.2 Introduction . . . 26

6.2.1 Block Diagram . . . 27

6.3 Clock Generation Unit . . . 29

6.3.1 Low Precision Clock . . . 29

6.3.2 Clock Control Unit . . . 30

7 System Control Unit - Power Modules (SCU-PM) . . . 32

7.1 Features . . . 32

7.2 Introduction . . . 32

7.2.1 Block Diagram . . . 32

8 Arm® Cortex®-M0 Core . . . 34

8.1 Features . . . 34

8.2 Introduction . . . 34

8.2.1 Block Diagram . . . 34

9 Address Space Organization . . . 36

10 Memory Control Unit . . . 37

10.1 Features . . . 37

10.2 Introduction . . . 37

10.2.1 Block Diagram . . . 37

10.3 NVM Module (Flash Memory) . . . 39

11 Interrupt System . . . 40
11.1 Features . . . 40
11.2 Introduction . . . 40
11.2.1 Overview . . . 40

12 Math Divider Module . . . 42
12.1 Features . . . 42
12.2 Introduction . . . 42
12.3 Block Diagram . . . 42

13 Watchdog Timer (WDT1) . . . 43
13.1 Features . . . 43
13.2 Introduction . . . 44

14 GPIO Ports and Peripheral I/O . . . 45
14.1 Features . . . 45
14.2 Introduction . . . 46
14.2.1 Port 0 and Port 1 . . . 46
14.2.2 Port 2 . . . 47
14.3 Functional Description . . . 47
14.3.1 Alternate Functions . . . 48
14.3.1.1 Port 0 Functions . . . 48
14.3.1.2 Port 1 Functions . . . 51
14.3.1.3 Port 2 Functions . . . 53

15 General Purpose Timer Units (GPT12) . . . 55
15.1 Features . . . 55
15.1.1 Features Block GPT1 . . . 55
15.1.2 Features Block GPT2 . . . 55
15.2 Introduction . . . 55
15.2.1 Block Diagram GPT1 . . . 56
15.2.2 Block Diagram GPT2 . . . 57

16 Timer2 and Timer21 . . . 58
16.1 Features . . . 58
16.2 Introduction . . . 58
16.2.1 Timer2 and Timer21 Modes Overview . . . 59

17 Capture/Compare Unit 6 (CCU6) . . . 60
17.1 Feature Set Overview . . . 60
17.2 Introduction . . . 61
17.2.1 Block Diagram . . . 62

18 UART1/2 . . . 63
18.1 Features . . . 63
18.2 Introduction . . . 63
18.2.1 Block Diagram . . . 64
18.3 UART Modes . . . 64

19 LIN Transceiver . . . 65
19.1 Features . . . 65

19.2 Introduction . . . 65
19.2.1 Block Diagram . . . 66

20 High-Speed Synchronous Serial Interface SSC1/2 . . . 67
20.1 Features . . . 67
20.2 Introduction . . . 67
20.2.1 Block Diagram . . . 68

21 Measurement Unit . . . 69
21.1 Features . . . 69
21.2 Introduction . . . 69
21.2.1 Block Diagram . . . 70

22 Measurement Core Module (incl. ADC2) . . . 71
22.1 Features . . . 71
22.2 Introduction . . . 71
22.2.1 Block Diagram . . . 72

23 Analog Digital Converter ADC10B (ADC1) . . . 73
23.1 Features . . . 73
23.2 Introduction . . . 74
23.2.1 Block Diagram . . . 74

24 High-Voltage Monitor Input . . . 75
24.1 Features . . . 75
24.2 Introduction . . . 75
24.2.1 Block Diagram . . . 75

25 High-Side Switch . . . 76
25.1 Features . . . 76
25.2 Introduction . . . 77
25.2.1 Block Diagram . . . 77
25.2.2 General . . . 77

26 Bridge Driver (incl. Charge Pump) . . . 78
26.1 Features . . . 78
26.2 Introduction . . . 79
26.2.1 Block Diagram . . . 79
26.2.2 Flexible Control . . . 79
26.2.3 Current-Driven Output Stages . . . 80
26.2.3.1 Overview . . . 80
26.2.3.2 Switch-On . . . 81
26.2.3.3 Switch-Off . . . 82
26.2.3.4 Control Modes . . . 82
26.2.4 Adjustable Cross-Conduction Protection . . . 84
26.2.5 High-Current Discharge Mode . . . 84
26.2.6 Passive Pull-Down Mode . . . 84
26.2.7 Brake Mode . . . 85
26.2.8 Hold Mode . . . 85
26.2.9 Timing Measurements . . . 85
26.2.10 Adaptive Control Mode . . . 86
26.2.11 Integrated 2-Stage Charge Pump . . . 86

26.2.12 Adjustable Voltage Monitoring . . . 87
26.2.13 Adjustable Short Circuit Detection . . . 87
26.2.14 Open-Load Detection . . . 87
26.2.15 Overtemperature . . . 87

27 Current Sense Amplifier . . . 88
27.1 Features . . . 88
27.2 Introduction . . . 88
27.2.1 Block Diagram . . . 89

28 Application Information . . . 90
28.1 Window-Lift Application Diagram . . . 90
28.2 Connection of unused pins . . . 92
28.3 Connection of P0.2 for SWD debug mode . . . 92
28.4 Connection of TMS . . . 92
28.5 ESD Tests . . . 92

29 Electrical Characteristics . . . 94
29.1 General Characteristics . . . 94
29.1.1 Absolute Maximum Ratings . . . 94
29.1.2 Functional Range . . . 97
29.1.3 Current Consumption . . . 99
29.1.4 Thermal Resistance . . . 103
29.1.5 Timing Characteristics . . . 103
29.2 Power Management Unit (PMU) . . . 104
29.2.1 PMU Input Voltage VS . . . 104
29.2.2 PMU I/O Supply Parameters VDDP . . . 104
29.2.3 PMU Core Supply Parameters VDDC . . . 106
29.2.4 VDDEXT Voltage Regulator 5.0V . . . 108
29.2.5 VPRE Voltage Regulator (PMU Subblock) Parameters . . . 111
29.2.5.1 Load Sharing Scenario of VPRE Regulator . . . 111
29.2.6 Power Down Voltage Regulator (PMU Subblock) Parameters . . . 112
29.3 System Clocks . . . 113
29.3.1 Electrical Characteristics Oscillators . . . 113
29.4 Flash Parameters . . . 114
29.4.1 Flash Characteristics . . . 114
29.5 Parallel Ports (GPIO) . . . 115
29.5.1 Description of Keep and Force Current . . . 115
29.5.2 DC Parameters Port 0, Port 1, TMS, Reset . . . 116
29.5.3 DC Parameters Port 2 . . . 118
29.6 LIN Transceiver . . . 120
29.6.1 Electrical Characteristics . . . 120
29.7 High-Speed Synchronous Serial Interface . . . 126
29.7.1 SSC Timing . . . 126
29.8 Measurement Unit . . . 127
29.8.1 Electrical Characteristics . . . 127
29.8.2 Central Temperature Sensor Module . . . 133
29.8.2.1 Electrical Characteristics . . . 133
29.9 ADC1 (10-Bit) . . . 134

29.9.1 Electrical Characteristics ADC1 (10-Bit) 134
29.10 High-Voltage Monitoring Input 135
29.10.1 Electrical Characteristics 135
29.11 High Side Switch 136
29.11.1 Electrical Characteristics 136
29.12 MOSFET Driver 140
29.12.1 Electrical Characteristics 140
29.13 Operational Amplifier 148
29.13.1 Electrical Characteristics 148
30 Package Outlines 150
31 Abbreviations 151
32 Revision History 153

2 Block Diagram

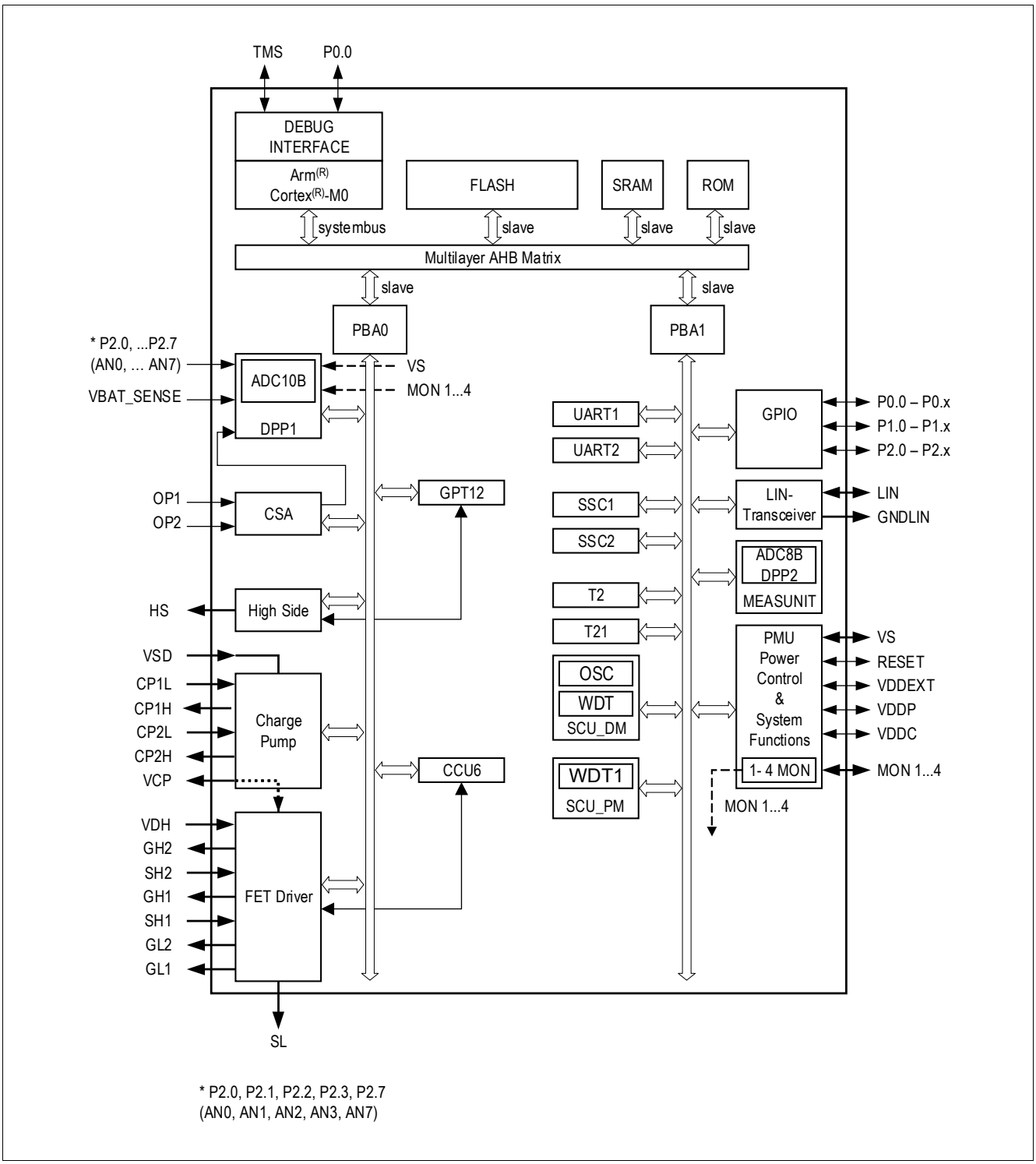

Figure 1 Block Diagram TLE9853QX

3 General Device Information

3.1 Pin Configurations

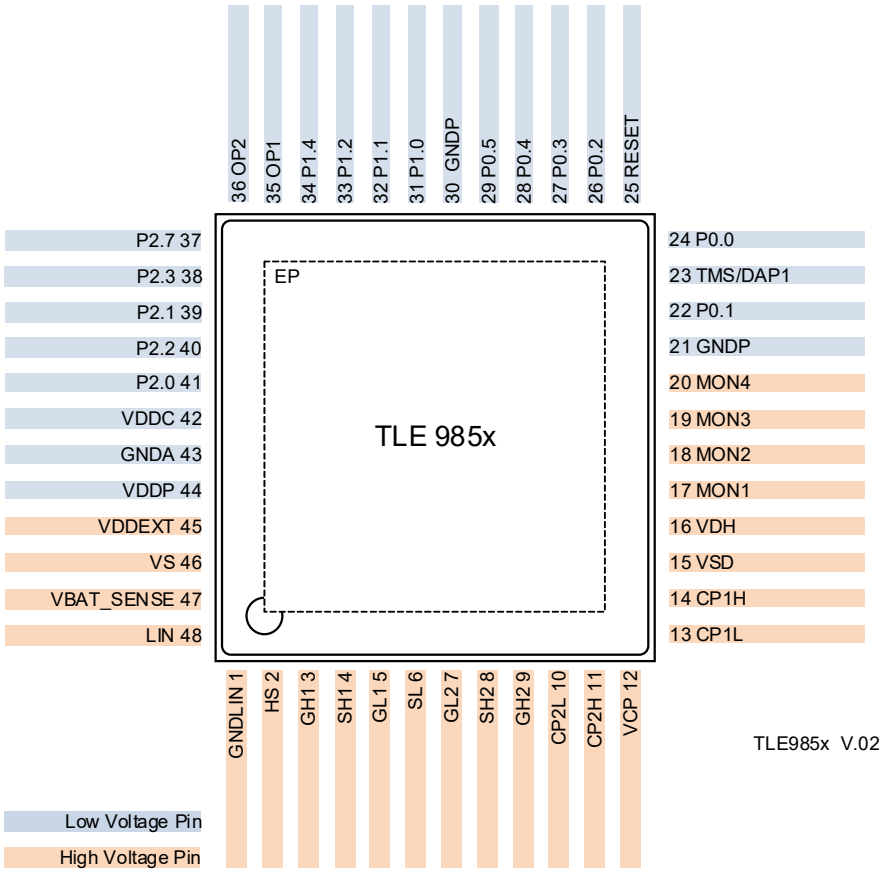

Figure 2 Pin Configuration VQFN-48, TLE9853QX

3.2 Pin Definitions and Functions

After reset, all pins are configured as input (except supply and LIN pins) with one of the following settings:

- Pull-up enabled only (PU)
- Pull-down enabled only (PD)
- Input with both pull-up and pull-down disabled (I)
- Output with output stage deactivated = high impedance state (Hi-Z)

The functions and default states of the TLE9853QX external pins are provided in the following table.

Type: indicates the pin type.

- I/O: Input or output
- I: Input only
- O: Output only
- P: Power supply

Not all alternate functions listed, see **Chapter 14**.

Table 1 Pin Definitions and Functions

Symbol	Pin Number	Type	Reset State	Function	
P0				**Port 0** Port 0 is a 6-Bit bidirectional general purpose I/O port. Alternate functions can be assigned and are listed in the Port description. Main function is listed below.	
P0.0	24	I/O	I/PU	SWD_CLK GPIO	Serial Wire Debug Clock General Purpose IO Alternate function mapping see **Table 6**
P0.1	22	I/O	I/PU	GPIO	General Purpose IO Alternate function mapping see **Table 6**
P0.2	26	I/O	I/PD	GPIO	General Purpose IO Alternate function mapping see **Table 6**
P0.3	27	I/O	I/PU	GPIO	General Purpose IO Alternate function mapping see **Table 6**
P0.4	28	I/O	I/PU	GPIO	General Purpose IO Alternate function mapping see **Table 6**
P0.5	29	I/O	I/PU	GPIO	General Purpose IO Alternate function mapping see **Table 6**
P1				**Port 1** Port 1 is a 4-Bit bidirectional general purpose I/O port. Alternate functions can be assigned and are listed in the Port description. Main function is listed below.	
P1.0	31	I/O	I	GPIO	General Purpose IO Alternate function mapping see **Table 7**
P1.1	32	I/O	I	GPIO	General Purpose IO Alternate function mapping see **Table 7**
P1.2	33	I/O	I	GPIO	General Purpose IO Alternate function mapping see **Table 7**

Table 1 Pin Definitions and Functions (cont'd)

Symbol	Pin Number	Type	Reset State	Function	
P1.4	34	I/O	I	GPIO	General Purpose IO Alternate function mapping see **Table 7**
P2				**Port 2** Port 2 is a 5-Bit general purpose input-only port. Alternate functions can be assigned and are listed in the Port description. Main function is listed below.	
P2.0	41	I	I	AN0	ADC1 analog input channel 6 Alternate function mapping see **Table 8**
P2.1	39	I	I	AN1	ADC1 analog input channel 7 Alternate function mapping see **Table 8**
P2.2	40	I	I	AN2	ADC1 analog input channel 8 Alternate function mapping see **Table 8**
P2.3	38	I	I	AN3	ADC1 analog input channel 9 Alternate function mapping see **Table 8**
P2.7	37	I	I	AN7	ADC1 analog input channel 12 Alternate function mapping see **Table 8**
Power Supply					
VS	46	P	–	Battery supply input	
VDDP	44	P	–	I/O port supply (5.0 V). Do not connect external loads. For buffer and bypass capacitors.	
VDDC	42	P	–	Core supply (1.5 V during Active Mode, 0.9 V during Stop Mode). Do not connect external loads. For buffer/bypass capacitor.	
VDDEXT	45	P	–	External voltage supply output (5.0 V, 40 mA)	
GNDP	21, 30	P	–	Core supply ground	
GNDA	43	P	–	Analog supply ground	
GNDLIN	1	P	–	LIN ground	
Monitor Inputs					
MON1	17	I	I	High Voltage Monitor Input 1	
MON2	18	I	I	High Voltage Monitor Input 2	
MON3	19	I	I	High Voltage Monitor Input 3	
MON4	20	I	I	High Voltage Monitor Input 4	
High Side Switch Outputs					
HS	2	O	Hi-Z	High Side Switch output	
LIN Interface					
LIN	48	I/O	PU	LIN bus interface input/output	
Charge Pump					
CP1H	14	P	–	Charge Pump Capacity 1 High, connect external C	
CP1L	13	P	–	Charge Pump Capacity 1 Low, connect external C	

Table 1 Pin Definitions and Functions (cont'd)

Symbol	Pin Number	Type	Reset State	Function
CP2H	11	P	–	Charge Pump Capacity 2 High, connect external C
CP2L	10	P	–	Charge Pump Capacity 2 Low, connect external C
VCP	12	P	–	Charge Pump Capacity
VSD	15	P	–	Battery supply input for Charge Pump
MOSFET Driver				
VDH	16	P	–	Voltage Drain High Side MOSFET Driver
GH1	3	P	–	Gate High Side FET 1
GH2	9	P	–	Gate High Side FET 2
SH1	4	P	–	Source High Side FET 1
SH2	8	P	–	Source High Side FET 2
GL1	5	P	–	Gate Low Side FET 1
GL2	7	P	–	Gate Low Side FET 2
SL	6	P	–	Source Low Side FETs
Others				
TMS	23	I	I/PD	TMS test mode select input DAP1
RESET	25	I/O	I/O/PU	Bidirectional reset input/output, not available during Sleep Mode
VBAT_SENSE	47	I	I	Battery supply voltage sense input
OP1	35	I	–	Negative current sense amplifier input
OP2	36	I	–	Positive current sense amplifier input
EP	–	–	–	Exposed Pad, connect to GND

4 Modes of Operations

This highly integrated circuit contains analog and digital functional blocks. For system and interface control an embedded 32-Bit Arm® Cortex®-M0 microcontroller is included. For internal and external power supply purposes, on-chip low drop-out regulators are existent. An internal oscillator (no external components necessary) provides a cost effective and suitable clock in particular for LIN slave nodes. As communication interface, a LIN transceiver and several High Voltage Monitor Inputs with adjustable threshold and filters are available. Furthermore one High-Side Switch (e.g. for driving LEDs or powering of switches), a driver for 4 n-channel MOSFETs including a two-stage charge pump and several general purpose input/outputs (GPIO) with pulse-width modulation (PWM) capabilities are available.

The Micro Controller Unit supervision and system protection including reset feature is controlled by a programmable window watchdog. A cyclic wake-up circuit, supply voltage supervision and integrated temperature sensors are available on-chip.

All relevant modules offer power saving modes in order to support terminal 30 connected automotive applications. A wake-up from the power saving mode is possible via a LIN bus message, via the monitoring inputs or repetitive with a programmable time period (cyclic wake-up).

The integrated circuit is available in a VQFN-48-31 package with 0.5 mm pitch and is designed to withstand the challenging conditions of automotive applications.

The TLE9853QX has several operational modes mainly to support low power consumption requirements. The low power modes and state transitions are depicted in **Figure 3** below.

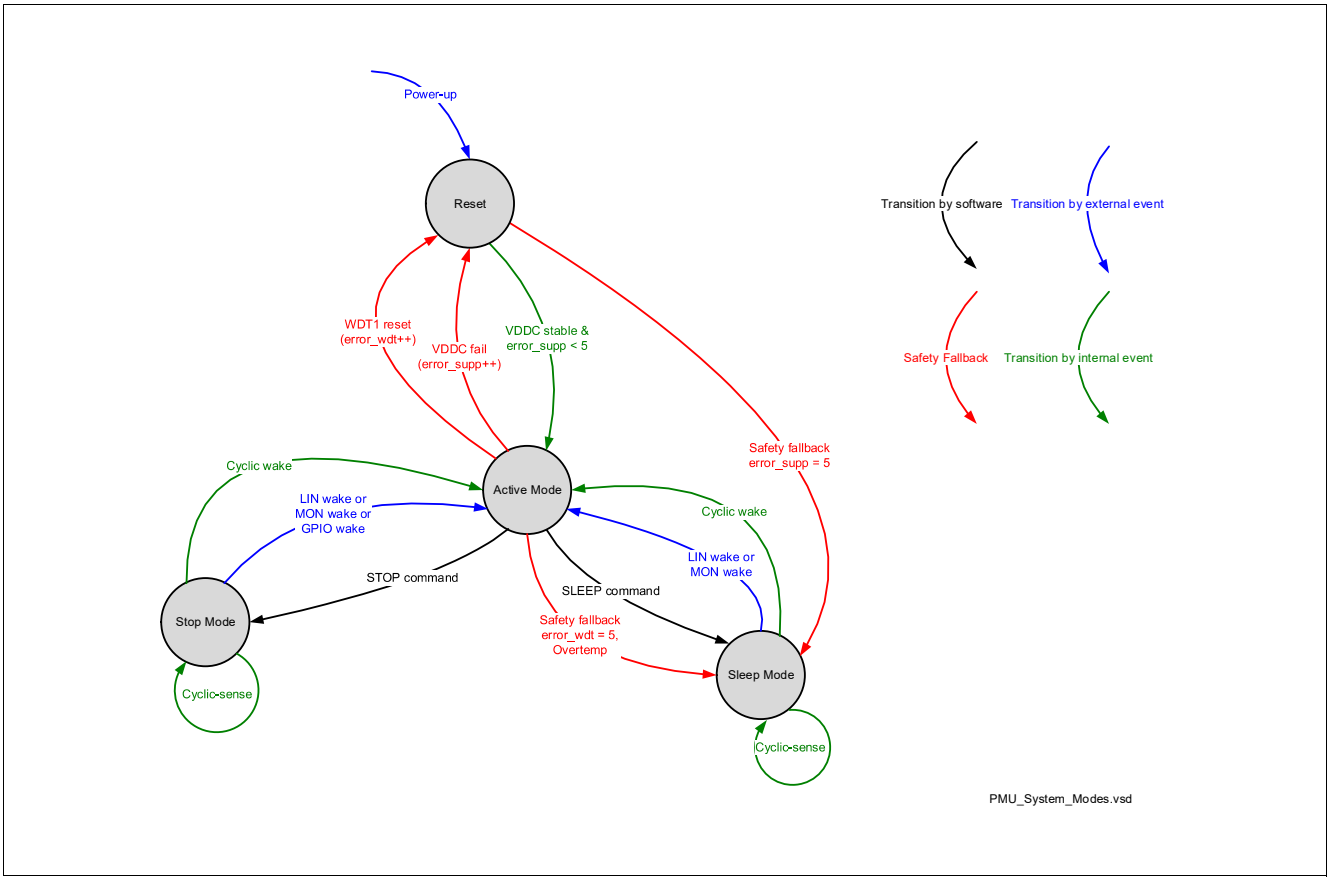

Figure 3 Power Control State Diagram

Modes of Operations

Reset Mode

The Reset Mode is a transition mode e.g. during power-up of the device after a power-on reset. In this mode the on-chip power supplies are enabled and all other modules are initialized. Once the core supply VDDC is stable, the Active Mode is entered . In case the watchdog timer WDT1 fails for more than four times, a fail-safe transition to the Sleep Mode is done.

Active Mode

In Active Mode all modules are activated and the TLE9853QX is fully operational.

Stop Mode

The Stop Mode is one out of two major low power modes. The transition to the low power modes is done by setting the respective Bits in the mode control register. In Stop Mode the embedded microcontroller is still powered allowing faster wake-up reaction times, but not clocked. A wake-up from this mode is possible by LIN bus activity, the High Voltage Monitor Input pins or the respective 5V GPIOs.

Sleep Mode

The Sleep Mode is a major low-power mode. The transition to the low-power modes is done by setting the respective Bits in the Micro Controller Unit mode control register. The sleep time is configurable. In Sleep Mode the embedded microcontroller power supply is deactivated, allowing the lowest system power consumption, but the wake-up time is longer compared to the Stop Mode. In this mode a 64 bit wide buffer for data storage is available. A wake-up from this mode is possible by LIN bus activity or the High Voltage Monitor Input pins and cyclic wake. A wake-up from Sleep Mode behaves similar to a power-on reset. While changing into Sleep Mode, no incoming wake-requests are lost (i.e. no dead-time). It is possible to enter sleep-mode even with LIN dominant.

Cyclic Wake-up Mode

The cyclic wake-up mode is a special operating mode of the Sleep Mode and the Stop Mode. The transition to the cyclic wake-up mode is done by first setting the respective Bits in the mode control register followed by the SLEEP or STOP command. Additional to the cyclic wake-up behavior (wake-up after a programmable time period), the wake-up sources of the normal Stop Mode and Sleep Mode are available.

Cyclic Sense Mode

The cyclic sense mode is a special operating mode of the Sleep Mode and the Stop Mode. The transition to the cyclic sense mode is done by first setting the respective Bits in the mode control register followed by the STOP or SLEEP command. In cyclic sense mode the High Side Switch can be switched on periodically for biasing some switches for example. The wake-up condition is configurable, when the sense result of defined monitor inputs at a window of interest changed compared to the previous wake-up period or reached a defined state respectively. In this case the Active Mode is entered immediately.

The following table shows the possible power mode configurations of each major module or function respectively.

Table 2 Power Mode Configurations

Module/function	Active Mode	Sleep Mode	Stop Mode	Comment
VPRE, VDDP, VDDC	ON	OFF	ON	–
VDDEXT	ON/OFF	OFF	cyclic ON/OFF	–
HS	ON/OFF	cyclic ON/OFF	cyclic ON/OFF	cyclic sense

Table 2 Power Mode Configurations (cont'd)

Module/function	Active Mode	Sleep Mode	Stop Mode	Comment
Bridge Driver	ON/OFF	OFF[1)]	OFF[1)]	–
LIN TRx	ON/OFF	wake-up only / OFF	wake-up only/ OFF	–
MONx (wake-up)	n.a.	disabled/static/ cyclic	disabled/static/ cyclic	cyclic: combined with HS=on
MONx (measurement)	ON/OFF	OFF	OFF	available on all channels
VS sense	ON/OFF brownout detection	brownout detection	brownout detection	brownout det. done in PCU
VBAT_SENSE	ON/OFF	OFF	OFF	–
GPIO 5V	ON	OFF	ON	–
WDT1	ON	OFF	OFF	–
CYCLIC WAKE	n.a.	cyclic wake-up/ cyclic sense/OFF	cyclic wake-up/ cyclic sense/OFF	cyclic sense with HS; wake-up needs MC for enter Sleep Mode again
Measurement	ON[2)]	OFF	OFF	–
Micro Controller Unit	ON/slow-down/STOP	OFF	OFF	–
CLOCK GEN (MC)	ON	OFF	OFF	–
LP_CLK (f_{LP_CLK})	ON	OFF	OFF	WDT1
LP_CLK2 (f_{LP_CLK2})	ON	ON	ON	for cyclic wake-up

1) Bridge Driver "Hold Mode" is available in sleep mode and stop mode.
2) May not be switched off due to safety reasons

Wake-up Source Prioritization

All wake-up sources have the same priority. In order to handle the asynchronous nature of the wake-up sources, the first wake-up signal will initiate the wake-up sequence. Nevertheless all wake-up sources are latched in order to provide all wake-up events to the application software. The software can clear the wake-up source flags. It is ensured, that no wake-up event is lost.

As default wake-up sources, MON inputs and cyclic wake are activated after power-on reset, LIN is disabled as wake-up source by default.

Wake-up Levels and Transitions

The wake-up can be triggered by rising, falling or both signal edges for each monitor input individually.

5 Power Management Unit (PMU)

5.1 Features

- System modes control (startup, sleep, stop and active)
- Power management (cyclic wake, cyclic sense)
- Control of system voltage regulators with diagnosis (overload, short, overvoltage)
- Fail safe mode detection and operation in case of system errors
- Wake-up sources configuration and management (LIN, MON, GPIOs)
- System error logging

5.2 Introduction

The purpose of the power management unit is to ensure the fail safe behavior of the system IC. Therefore the power management unit controls all system modes including the corresponding transitions. The power management unit is responsible for generating all needed voltage supplies for the embedded MCU (VDDC, VDDP) and the external supply (VDDEXT). Additionally, the PMU provides well defined sequences for the system mode transitions and generates hierarchical reset priorities. The reset priorities control the reset behavior of all system functionalities especially the reset behavior of the embedded MCU. All these functions are controlled by finite state machines. The system master functionality of the PMU requires the generation of an independent logic supply and system clock. Therefore the PMU has a module internal logic supply and system clock which works independently of the MCU clock.

5.2.1 Block Diagram

The following figure shows the structure of the Power Management Unit. **Table 3** describes the submodules more detailed.

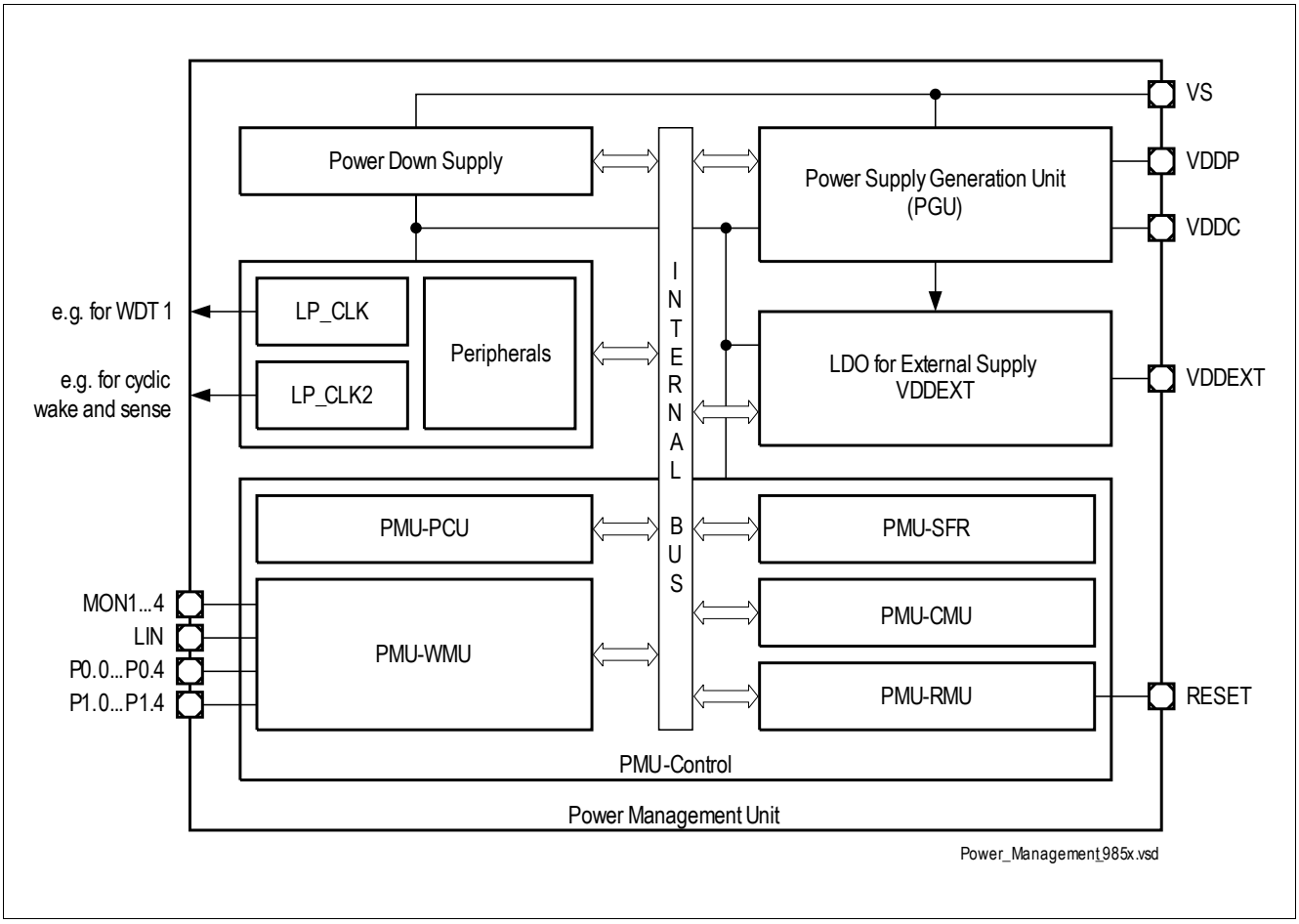

Figure 4 Power Management Unit Block Diagram

Table 3 Description of PMU Submodules

Mod. Name	Modules	Functions
Power Down Supply	Independent Supply Voltage Generation for PMU	This supply is dedicated to the PMU to ensure an independent operation from generated power supplies (VDDP, VDDC).
LP_CLK (= f_{LP_CLK})	• Clock Source for all PMU submodules • Backup Clock Source for System (can be selected as f_{sys} clock source through SCU_APCLK.SYSCLKSEL) • Clock Source for WDT1	This ultra low power oscillator generates the clock for the PMU. This clock is also used as independent clock source for WDT1.
LP_CLK2 (= f_{LP_CLK2})	Clock Source for PMU	This ultra low power oscillator generates the clock for the PMU in Stop Mode and in the cyclic modes.

Table 3 Description of PMU Submodules (cont'd)

Mod. Name	Modules	Functions
Peripherals	Peripheral Blocks of PMU	These blocks include the analog peripherals to ensure a stable and fail safe PMU startup and operation (bandgap, bias).
Power Supply Generation Unit (PGU)	Voltage regulators for VDDP and VDDC	This block includes the voltage regulators for the pad supply (VDDP) and the core supply (VDDC).
VDDEXT	Voltage regulator for VDDEXT to supply external modules (e.g. Sensors)	This voltage regulator is a dedicated supply for external modules.
PMU-SFR	All PMU relevant Extended Special Function Registers	This module contains all PMU relevant registers, which are needed to control and monitor the PMU.
PMU-PCU	Power Control Unit of the PMU	This block is responsible for controlling all power related actions within the PGU Module.It also contains all regulator related diagnosis like under- and overvoltage detection, overcurrent and short circuit diagnoses.
PMU-WMU	Wake-up Management Unit of the PMU	This block is responsible for controlling all Wake-up related actions within the PMU Module.
PMU-CMU	Cyclic Management Unit of the PMU	This block is responsible for controlling all actions within cyclic mode.
PMU-RMU	Reset Management Unit of the PMU	This block generates resets triggered by the PMU like undervoltage or short circuit reset, and passes all resets to the relevant modules and their register. A reset status register with every reset source is available.

5.2.2 PMU Modes Overview

The following state diagram shows the available modes of the device.

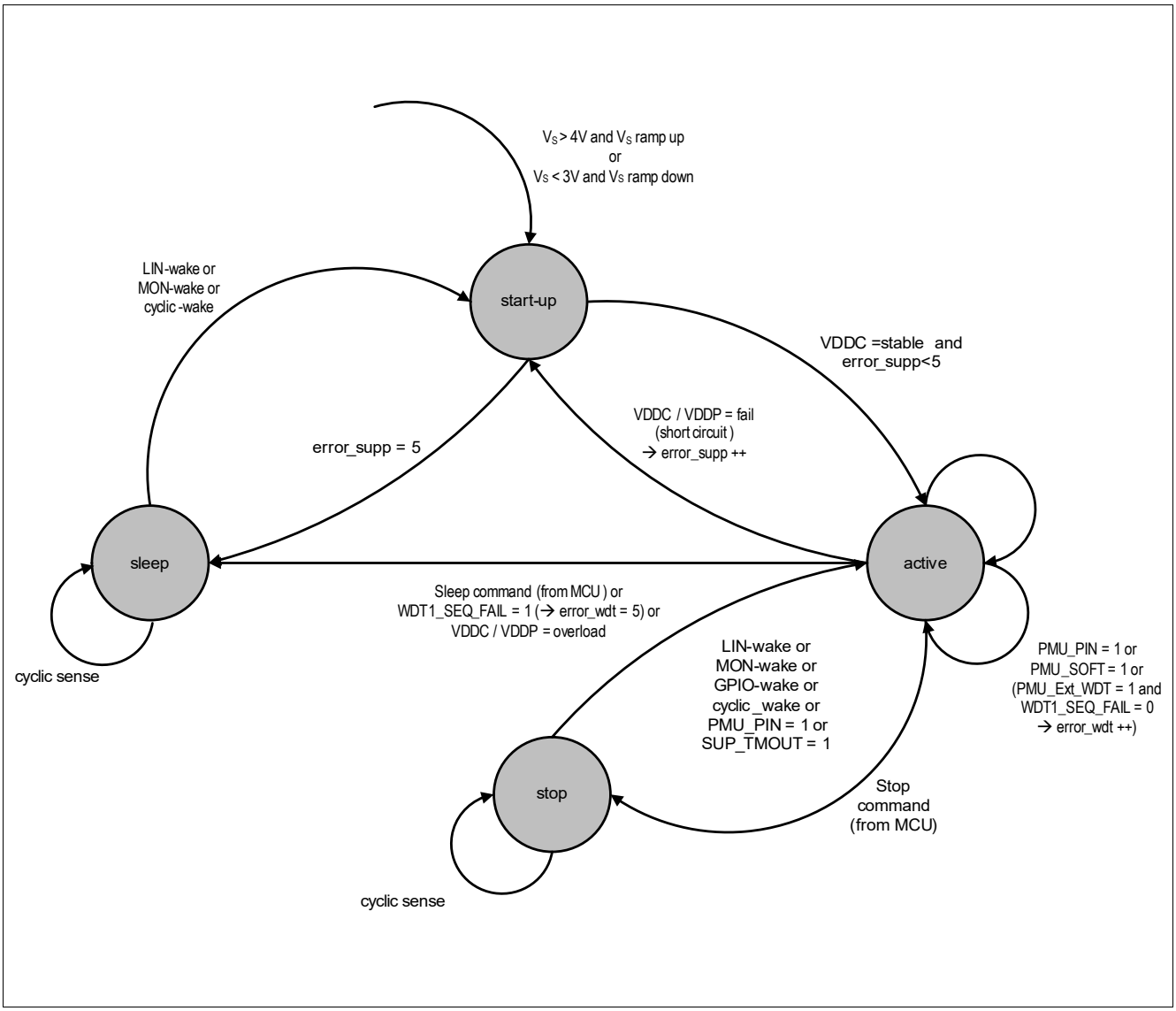

Figure 5 Power Management Unit System Modes

5.3 Power Supply Generation (PGU)

5.3.1 Voltage Regulator 5.0V (VDDP)

This module represents the 5 V voltage regulator, which provides the pad supply for the parallel port pins and other 5 V analog functions (e.g. LIN Transceiver).

Features

- 5 V low-drop voltage regulator
- Overcurrent Monitoring and Shutdown with MCU signalling (Interrupt)
- Overvoltage monitoring with MCU signalling (Interrupt)
- Undervoltage monitoring with MCU signalling (Interrupt)
- Undervoltage monitoring with Reset (UnderVoltage Reset, V_{DDPUV})
- Overtemperature Shutdown with MCU signalling (Interrupt)
- Pre-Regulator for VDDC Regulator
- GPIO Supply
- Pull Down Current Source at the output for Sleep Mode only

The output capacitor C_{VDDP} is mandatory to ensure a proper regulator functionality.

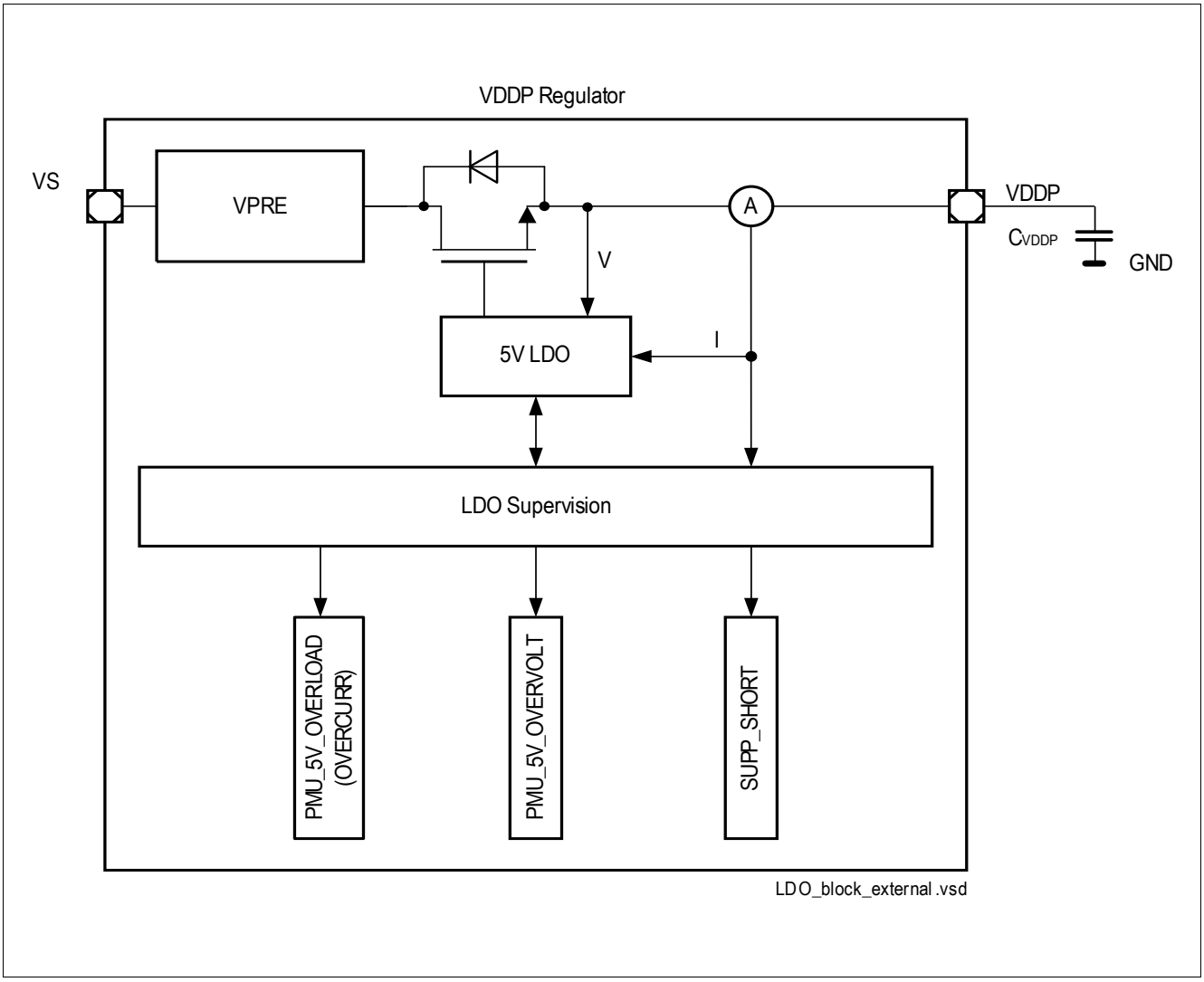

Figure 6 Module Block Diagram of VDDP Voltage Regulator

5.3.2 Voltage Regulator 1.5V (VDDC)

This module represents the 1.5 V voltage regulator, which provides the supply for the microcontroller core, digital peripherals and other chip internal analog 1.5 V functions (e.g. ADC).

Features

- 1.5 V low-drop voltage regulator
- Overcurrent monitoring and Shutdown with MCU signalling (Interrupt)
- Overvoltage monitoring with MCU signalling (Interrupt)
- Undervoltage monitoring with MCU signalling (interrupt)
- Undervoltage monitoring with reset
- Overtemperature Shutdown with MCU signalling (Interrupt)
- Pull Down Current Source at the output for Sleep Mode only

The output capacitor C_{VDDC} is mandatory to ensure a proper regulator functionality.

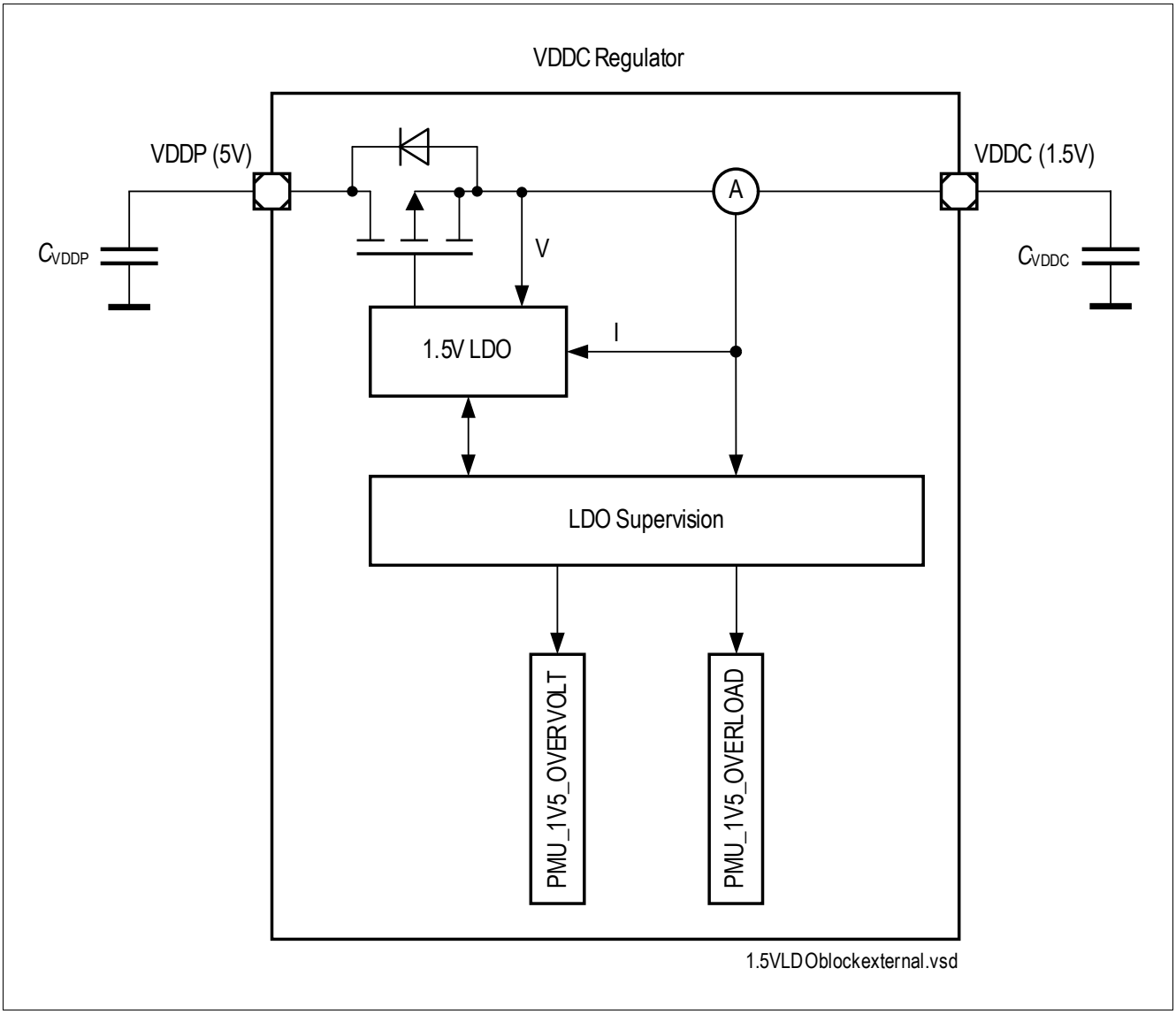

Figure 7 Module Block Diagram of VDDC Voltage Regulator

5.3.3 External Voltage Regulator 5.0V (VDDEXT)

This module represents the 5 V voltage regulator, which serves as a supply for external circuits. It can be used e.g. to supply an external sensor, LEDs or potentiometers.

Features

- Switchable (by software) 5 V low-drop voltage regulator
- Switch-on undervoltage blanking time in order to drive small capacitive loads
- Intrinsic current limitation
- Undervoltage monitoring and shutdown with MCU signalling (Interrupt)
- Overtemperature Shutdown with MCU signalling (Interrupt)
- Resistive discharge path at the output if the regulator is off
- Cyclic sense option together with GPIOs
- Low current mode available to ensure reduced stop mode current consumption. In this mode current capability is reduced to I_{VDDEXT_LCM}

The output capacitor C_{VDDEXT} is mandatory to ensure a proper regulator functionality.

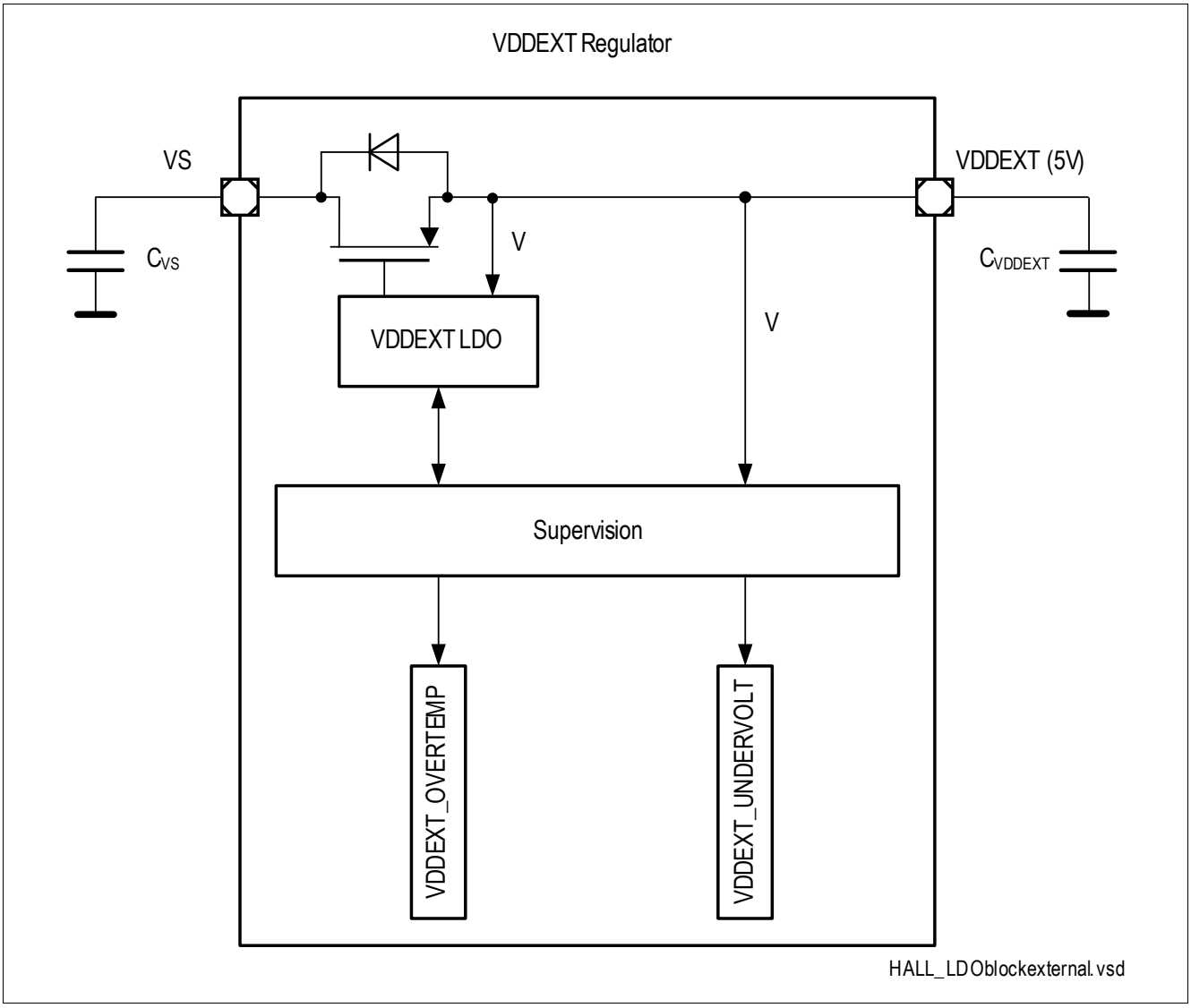

Figure 8 Module Block Diagram

5.3.4 Power-on Reset Concept

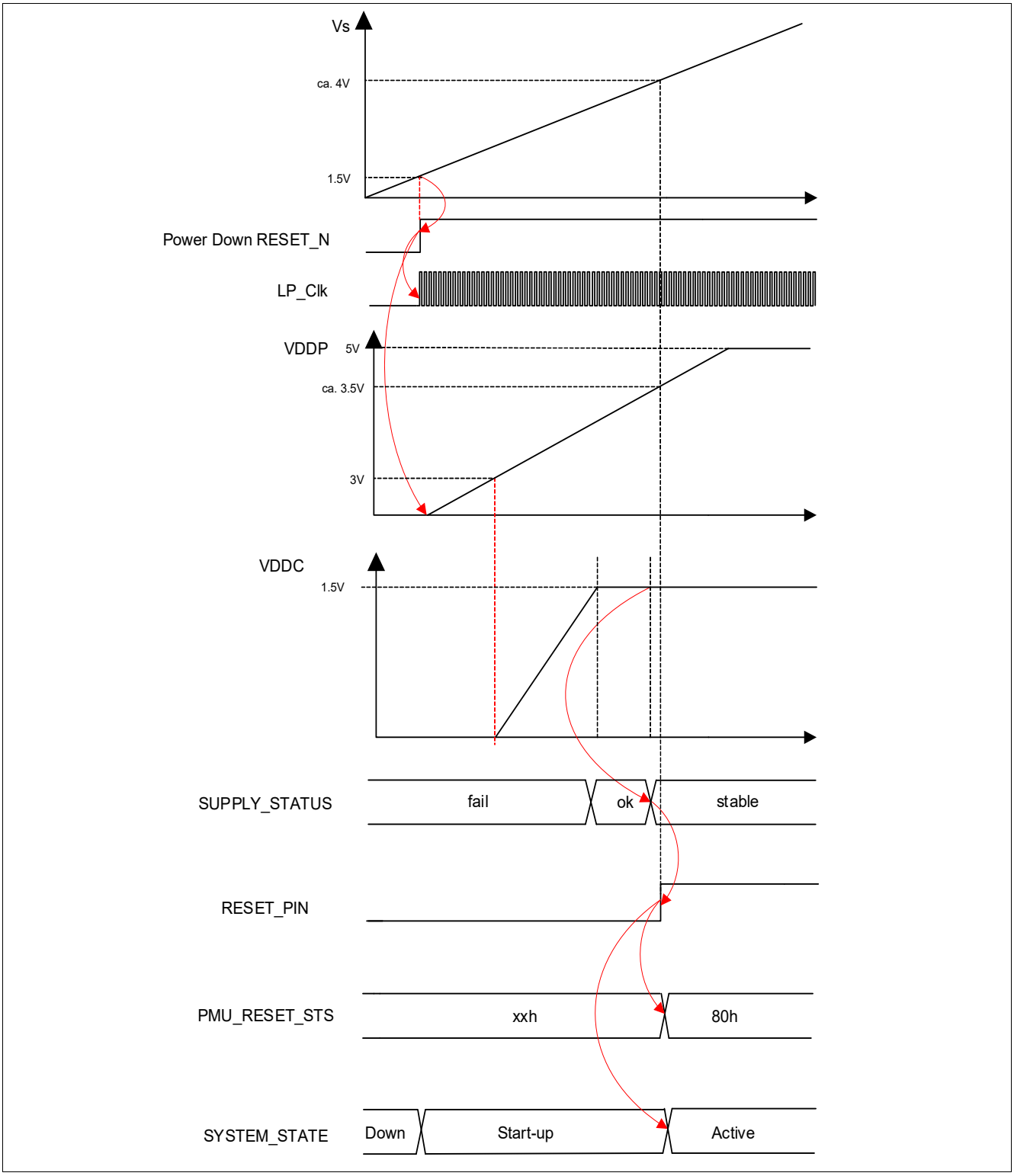

Figure 9 Power-on Reset Concept

6 System Control Unit - Digital Modules (SCU-DM)

6.1 Features

- Flexible clock configuration features
- Reset management of all system resets
- System modes control for all power modes (active, power down, sleep)
- Interrupt enabling for many system peripherals
- General purpose input output control
- Debug mode control of system peripherals

6.2 Introduction

The System Control Unit (SCU) supports all central control tasks in the TLE9853QX. The SCU is made up of the following sub-modules:

- Clock System and Control (CGU)
- Reset Control (RCU)
- Power Management (PCU)
- Interrupt Management (ICU)
- General Port Control
- Flexible Peripheral Management
- Module Suspend Control
- Watchdog Timer (WDT)
- Error Detection and Correction in Data Memory
- Miscellaneous Control
- Register Mapping

6.2.1 Block Diagram

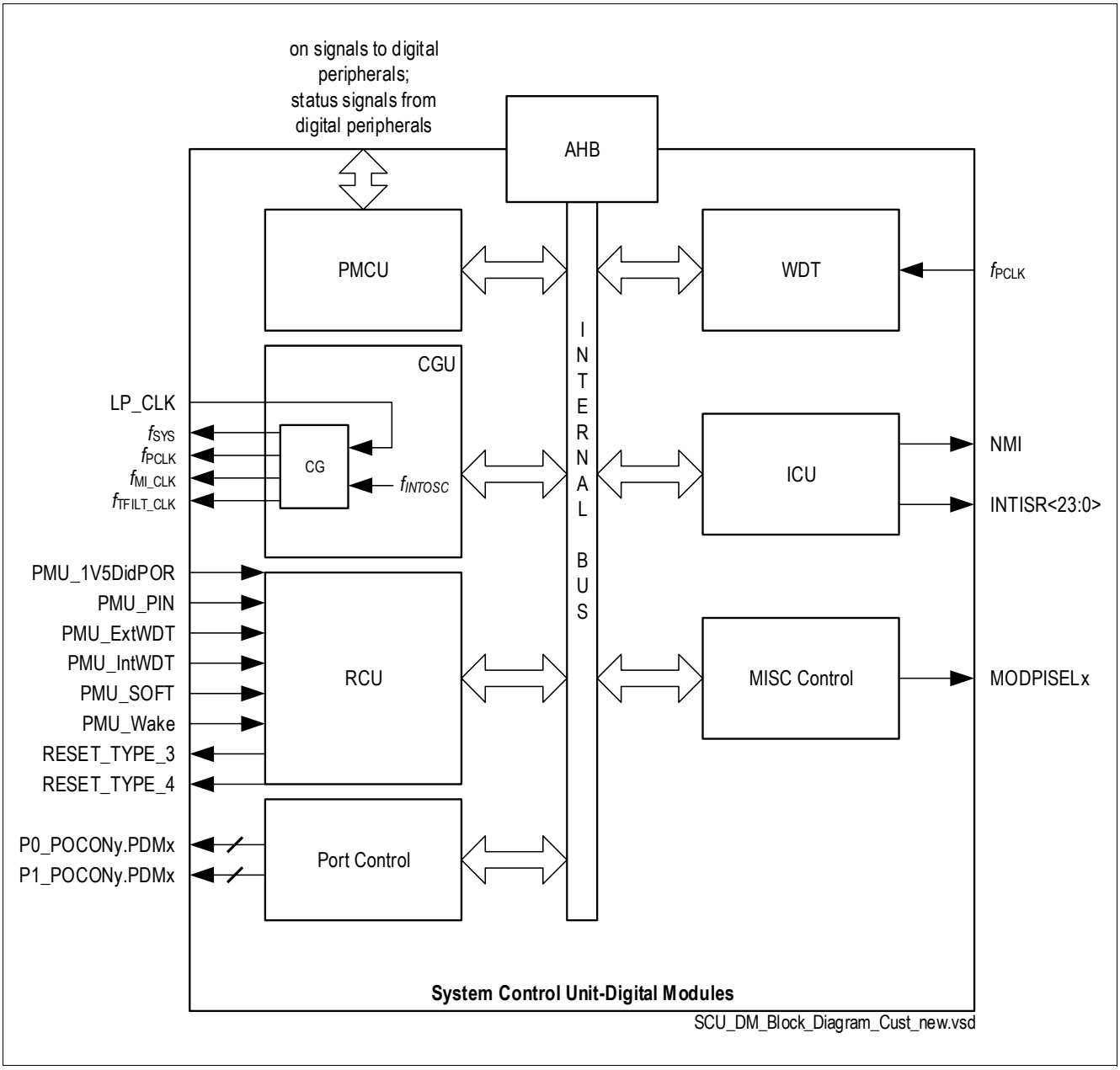

Figure 10 System Control Unit - Digital Modules Block Diagram

IO description of SCU_DM:

- CGU:
  - f_{sys}; system clock
  - LP_CLK; low-power backup clock
- RCU:
  - 1V5DidPOR; Undervoltage reset of power down supply
  - PMU_PIN; Reset generated by reset pin
  - PMU_ExtWDT; WDT1 reset
  - PMU_IntWDT; WDT (SCU) reset

  - PMU_SOFT; Software reset
  - PMU_Wake; Stop Mode exit with reset
  - Reset_Type_3; Peripheral reset (contains all resets)
  - Reset_Type_4; Peripheral reset (without SOFT and WDT reset)
- Port Control:
  - P0_POCONy.PDMx; driver strength control
  - P1_POCONy.PDMx; driver strength control
- MISC:
  - MODPISELx; Mode selection registers for UART (source selection) and Timer (trigger or count selection)
- WDT (Watchdog Timer in SCU-DM): f_{SYS}; System clock

6.3 Clock Generation Unit

The Clock Generation Unit (CGU) provides a flexible clock generation for TLE9853QX. During user program execution the frequency can be programmed for an optimal ratio between performance and power consumption. Therefore the power consumption can be adapted to the actual application state.

The CGU in the TLE9853QX consists of an internal oscillator (f_{INTOSC}) and a Clock Control Unit (CCU).

The system clock f_{SYS} is generated out of the following selectable clocks:

- Direct output of internal oscillator f_{INTOSC}
- Low-precision clock f_{LP_CLK} (hardware-enabled for startup after reset and during power-down wake-up sequence)

The following sections describe the different parts of the CGU.

6.3.1 Low Precision Clock

The clock source LP_CLK is a low-precision RC oscillator (LP-OSC, see f_{LP_CLK}) that is enabled by hardware as an independent clock source for the TLE9853QX startup after reset and during the power-down wake-up sequence. There is no user configuration possible on f_{LP_CLK}.

6.3.2 Clock Control Unit

The Clock Control Unit (CCU) receives the clock from the internal input clock f_{INTOSC}, or the low-precision input clock f_{LP_CLK}. The system frequency is derived from one of these clock sources.

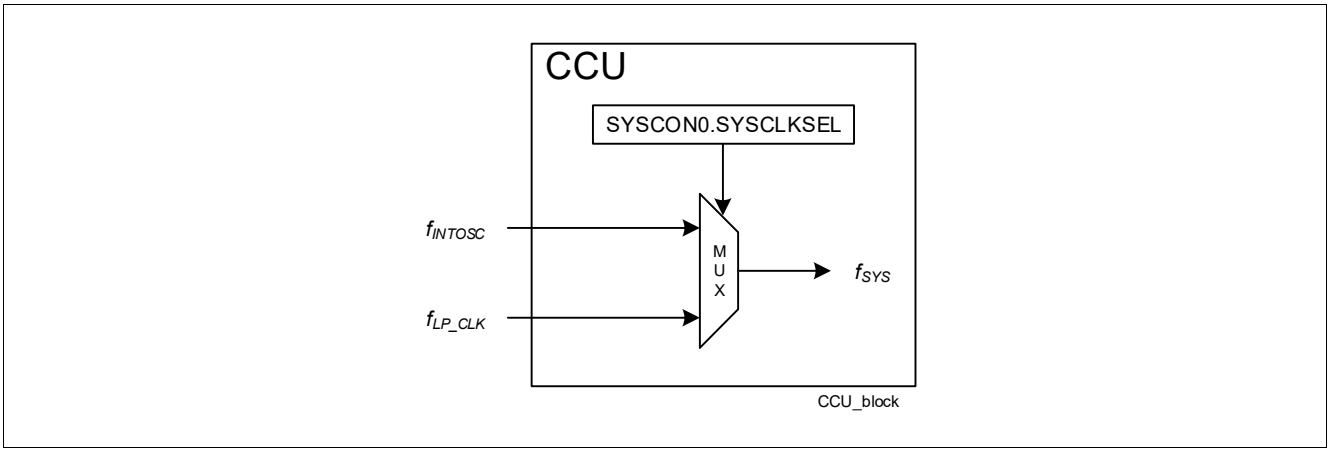

Figure 11 Clock Inputs to Clock Control Unit

The CCU generates all necessary clock signals within the microcontroller from the system clock. It consists of:

- Clock slow down circuitry
- Centralized enable/disable circuit for clock control

In normal running mode, the main module frequencies (synchronous unless otherwise stated) are as follows:

- System frequency, f_{SYS} = up to 40 MHz (measurement interface clock MI_CLK is derived from this clock)
- CPU clock (CCLK, SCLK) = up to 40 MHz (divide-down of NVM access clock)
- NVM access clock (NVMACCCLK) = up to 40 MHz
- Peripheral clock (PCLK, PCLK2, NVMCLK) = up to 40 MHz (equals CPU clock; must be same or higher)

Some peripherals are clocked by PCLK, others clocked by PCLK2 and the NVM is clocked by both NVMCLK and NVMACCCLK. During normal running mode, PCLK = PCLK2 = NVMCLK = CCLK. On wake-up from power-down mode, PCLK2 is restored similarly like NVMCLK.

For optimized NVM access (read/write) with reduced wait state(s) and with respect to system requirements on CPU operational frequency, bit field NVMCLKFAC is provided for setting the frequency factor between the NVM access clock NVMACCCLK and the CPU clock CCLK.

For the slow down mode, the operating frequency is reduced using the slow down circuitry with clock divider setting at the bit field CLKREL. Bit field CLKREL is only effective when slow down mode is enabled via SFR bit PMCON0.SD bit. Note that the slow down setting of bit field CLKREL correspondingly reduces the NVMACCCLK clock. Slow down setting does not influence the erase and write cycles for the NVM.

Peripherals UART1, UART2, T2 and T21 are not influenced by CLKREL and either not by NVMCLKFAC, to allow functional LIN communication in slow down mode.

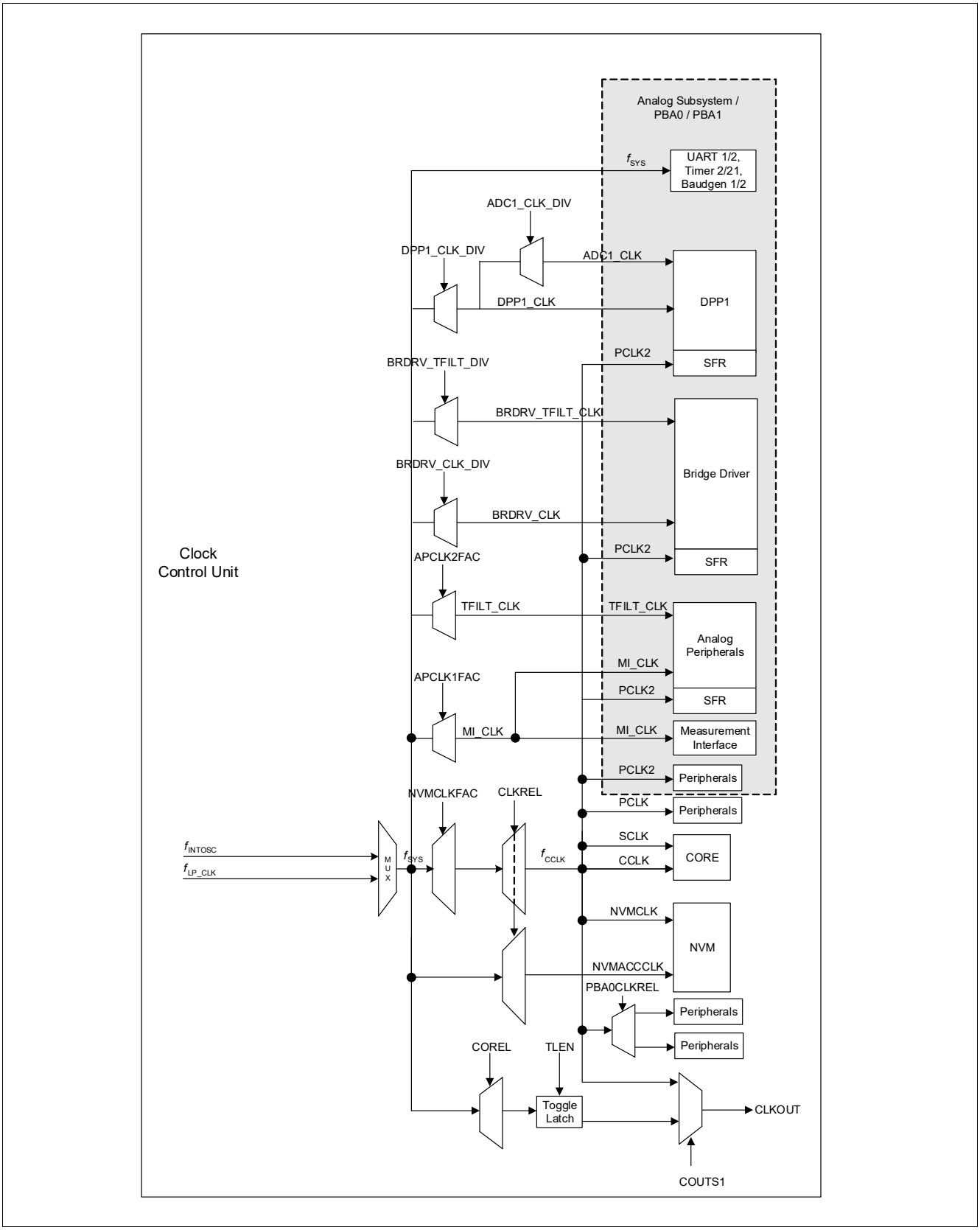

Figure 12 Clock Generation from f_{sys}; CLKOUT Generation

7 System Control Unit - Power Modules (SCU-PM)

7.1 Features

- Clock Watchdog Unit (CWU): supervision of all power modules relevant clocks with NMI signalling.
- Interrupt Control Unit (ICU): all system relevant interrupt flags and status flags.
- Power Control Unit (PCU): takes over control when device enters and exits Sleep and Stop Mode.
- External Watchdog (WDT1): independent system watchdog to monitor system activity

7.2 Introduction

7.2.1 Block Diagram

The System Control Unit of the power modules consists of the sub-modules in the figure shown below:

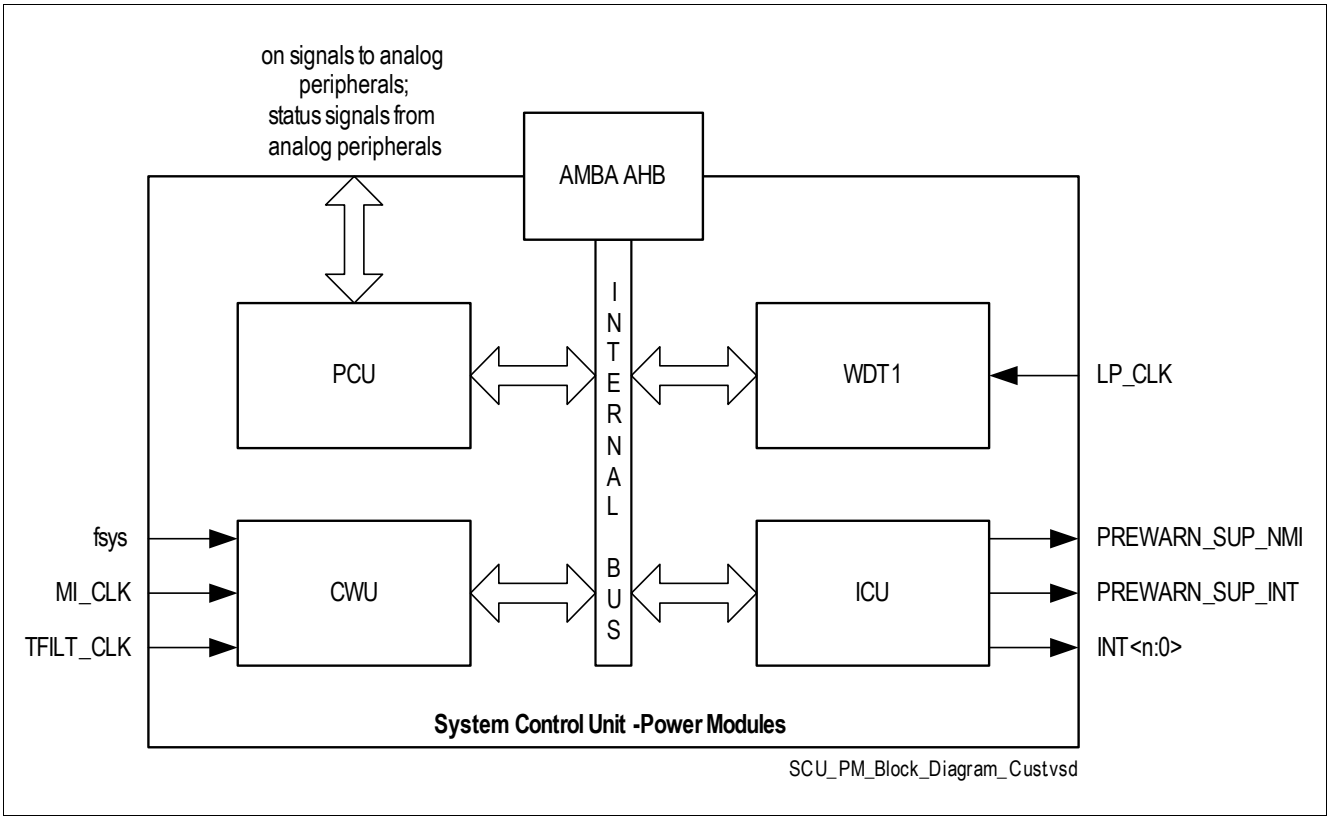

Figure 13 Block diagram of System Control Unit - Power Modules

IO description of SCU_PM:

- CWU:
  - check of f_{sys} = system frequency
  - check of MI_CLK = measurement interface clock (analog clock): derived out of f_{sys} by division factors 1/2/3/4
  - check of TFILT_CLK = clock used for digital filters: derived out of f_{sys} by configurable division factors

- ICU:
  - PREWARN_SUP_NMI = generation of Prewarn-Supply NMI
  - PREWARN_CLK_INT = generation of Prewarn-Clock Watchdog NMI
  - INT = generation of MISC interrupts

8 Arm® Cortex®-M0 Core

8.1 Features

The key features of the Arm® Cortex®-M0 implemented are listed below.

Processor Core. A low gate count core, with low latency interrupt processing:

- Thumb® + Thumb-2® Instruction Set
- Banked stack pointer (SP) only
- Handler and thread modes
- Thumb and debug states
- Interruptible-continued instructions LDM/STM, Push/Pop for low interrupt latency
- Automatic processor state saving and restoration for low latency Interrupt Service Routine (ISR) entry and exit
- Arm® architecture v6-M Style
- Arm®v6 unaligned accesses
- Systick (typ. 1ms)

Nested Vectored Interrupt Controller (NVIC) closely integrated with the processor core to achieve low latency interrupt processing:

- External interrupts, configurable from 1 to 24
- 7 interrupt priority registers for levels from 0 up to 192 in steps of 64
- Dynamic repriorization of interrupts
- Priority grouping. This enables selection of pre-empting interrupt levels and non pre-empting interrupt levels
- Support for tail-chaining and late arrival of interrupts. This enables back-to-back interrupt processing without the overhead of state saving and restoration between interrupts.
- Processor state automatically saved on interrupt entry, and restored on interrupt exit, with no instruction overhead

Bus interfaces

- Advanced High-performance Bus-Lite (AHB-Lite) interfaces

8.2 Introduction

The Arm® Cortex®-M0 processor is a leading 32-bit processor and provides a high-performance and cost-optimized platform for a broad range of applications including microcontrollers, automotive body systems and industrial control systems. Like the other Arm® Cortex® family processors, the Arm® Cortex®-M0 processor implements the Thumb®-2 instruction set architecture. With the optimized feature set the Arm® Cortex®-M0 delivers 32-bit performance in an application space that is usually associated with 8- and 16-bit microcontrollers.

8.2.1 Block Diagram

Figure 14 shows the functional blocks of the Arm® Cortex®-M0.

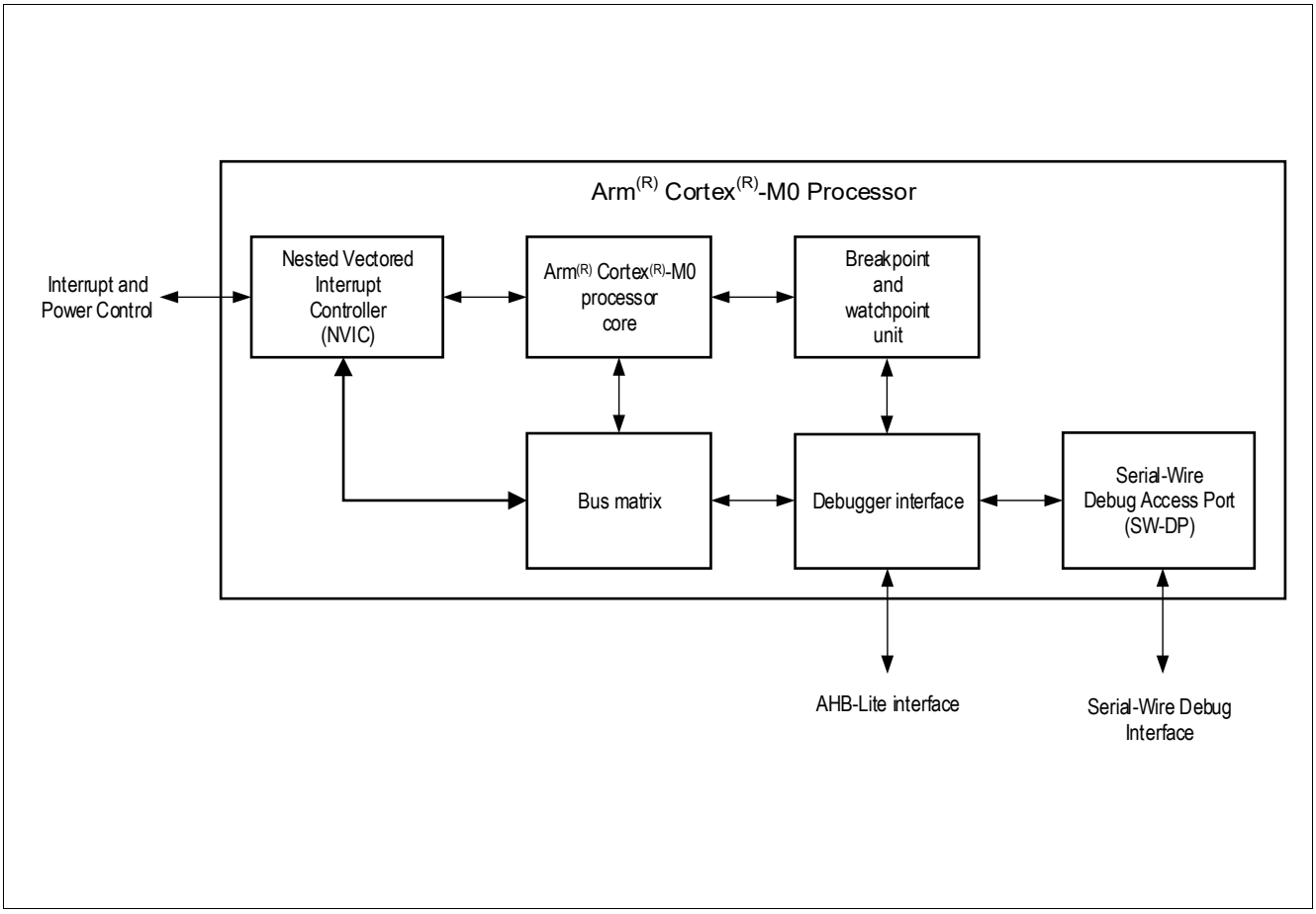

Figure 14 Arm® Cortex®-M0 Block Diagram

9 Address Space Organization

The TLE9853QX manipulates operands in the following memory spaces:

- 48 KB of Flash memory in code space
- 24 KB Boot ROM memory in code space (used for boot code and IP storage)
- 4 KB RAM memory in Arm® Cortex®-M0 code region (RAM can be fetched, read/written as program memory)
- Special function registers (SFRs) in peripheral linear address space

The on-chip memory modules available in the TLE9853QX are:

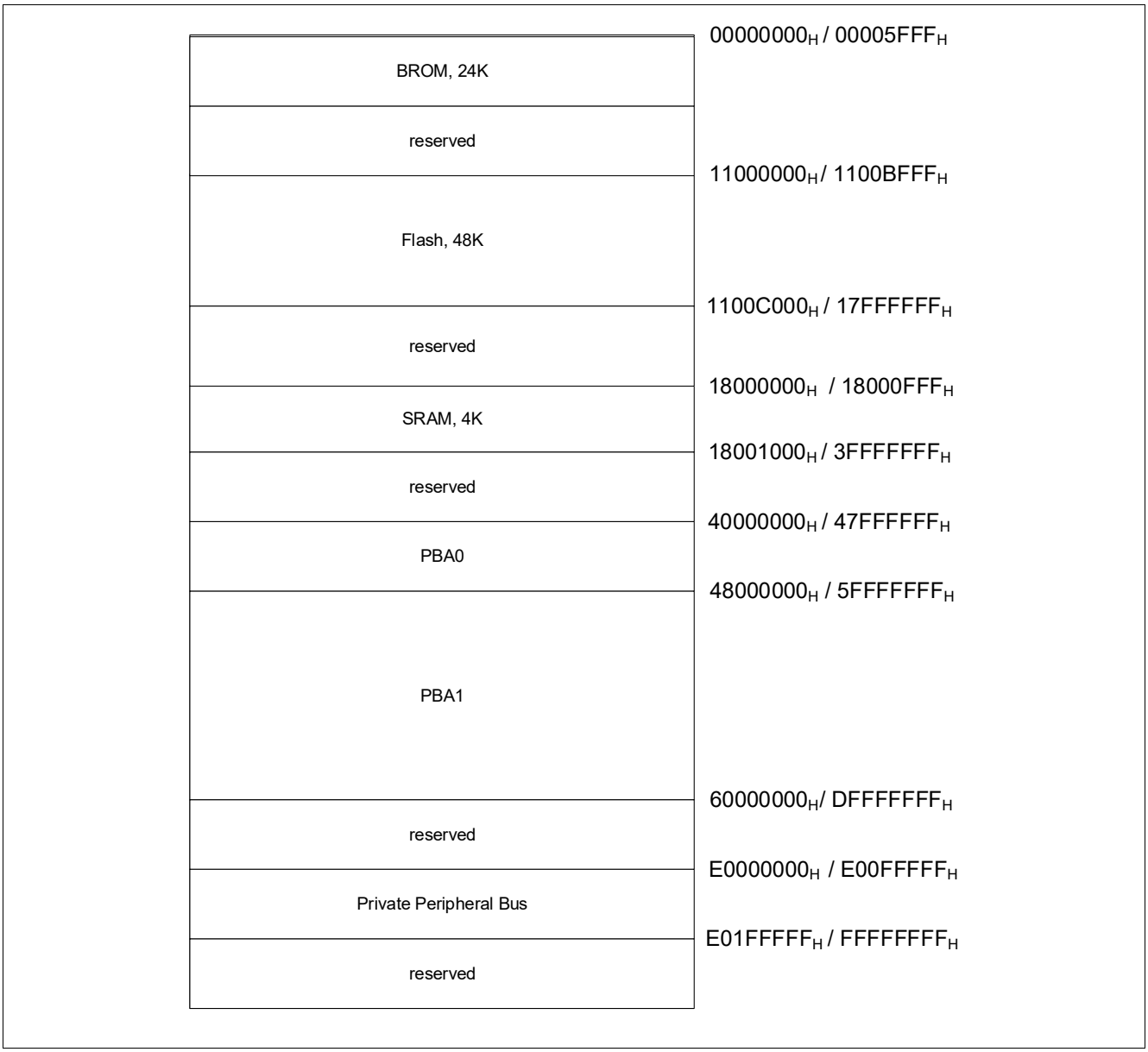

Figure 15 TLE9853QX Memory Map

10 Memory Control Unit

10.1 Features

- Provides Memory access to ROM, RAM, NVM, Config Sector through AHB-Lite Interface
- MBIST for RAM
- MBIST for ROM
- NVM Configuration with Special Function Registers through AHB-Lite Interface
- Hardware Memory Protection Logic
- Stack overflow detection

10.2 Introduction

10.2.1 Block Diagram

The Memory Control Unit (MCU) is divided in the following sub-modules:

- NVM Memory module (embedded Flash Memory)
- RAM memory module
- BootROM memory module
- Memory protection Unit (MPU) module

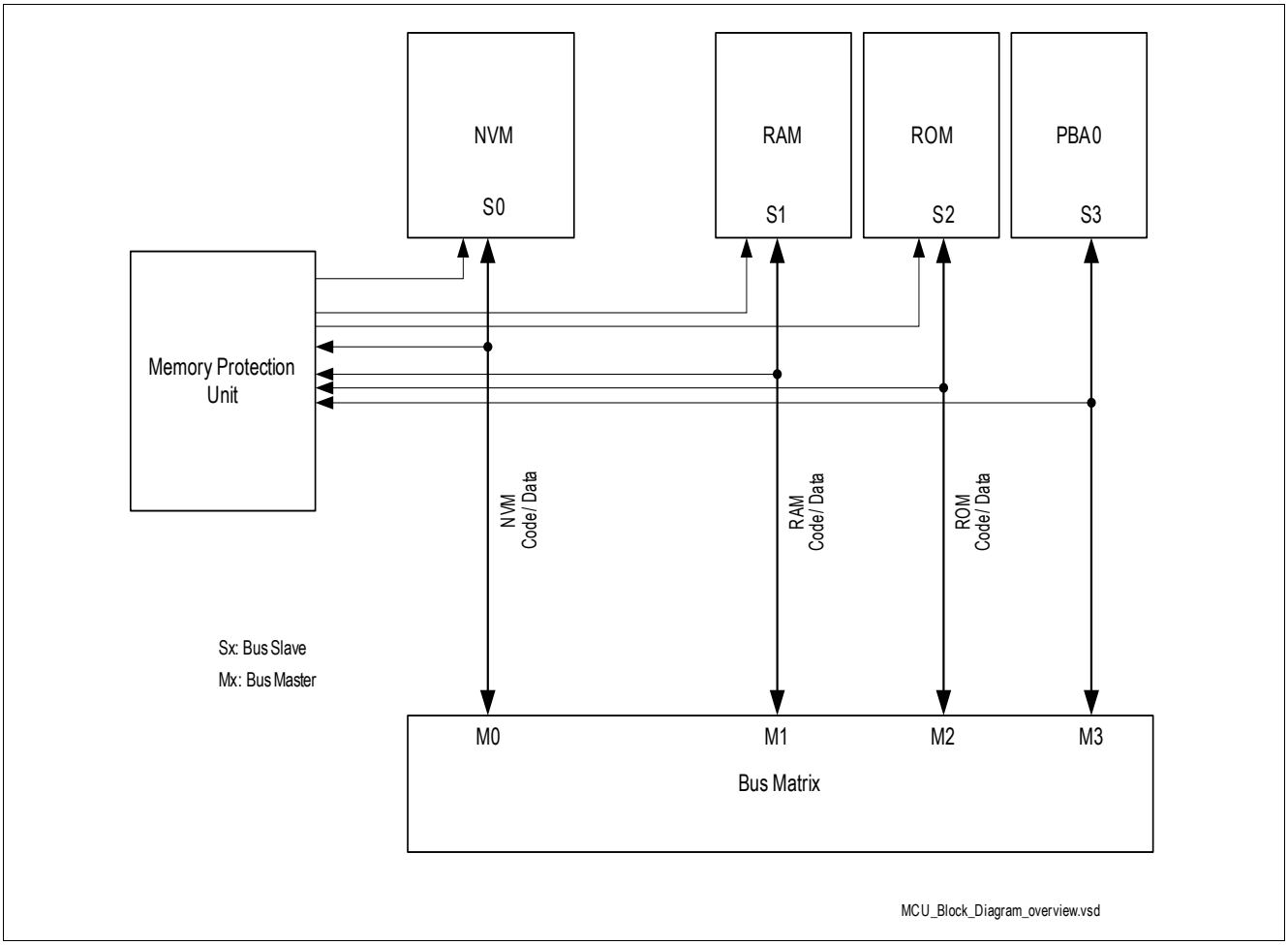

Figure 16 Memory Control Unit Block View

Functional Features for RAM

- 4 KB RAM
- Error correction code (ECC) for detection of single bit and double bit errors and dynamic correction of single bit errors
- Single byte access

10.3 NVM Module (Flash Memory)

The Flash memory provides an embedded user-programmable non-volatile memory, allowing fast and reliable storage of user code and data.

Features

- In-System Programming via LIN (Flash mode) and SWD
- Error Correction Code (ECC) for detection of single Bit and double Bit errors and dynamic correction of single Bit errors on Data Block (Double words, 64 bits).
- Interrupt and signaling of double bit error by NMI, address of double bit error readable by FW API user routine
- Possibility of checking single bit error occurrence by ROM routines
- Program width of 128 Byte (page)
- Minimum erase width of 128 Byte (page)
- Integrated hardware support for EEPROM emulation
- 8 Byte read access
- Physical read access time: max. 75 ns
- Code read access acceleration integrated (read buffer)
- Page program time: typ. 3 ms
- Page erase (128 bytes) and sector erase (4K bytes) time: typ. 4 ms
- 4 individual protection passwords for NVM customer BSL region, code region, data linear region, and data mapped region
- Security option to protect read out via debug interface in application run mode
- Write/erase access to 100TP (e.g. option bytes) is possible via the debug interface

Note: The user has to ensure that no flash operations which change the content of the flash get interrupted at any time.

The clock for the NVM is supplied with the system frequency f_{sys}. Integrated firmware routines are provided to ease NVM, and other operations including EEPROM emulation.

11 Interrupt System

11.1 Features

- 23 interrupt nodes for on-chip peripherals
- 8 NMI nodes for critical system events
- Maximum flexibility (resp. priority and node grouping) for all interrupt nodes

11.2 Introduction

11.2.1 Overview

The TLE9853QX supports 24 interrupt vectors with 4 priority levels. 21 of these interrupt vectors are assigned to the on-chip peripherals: GPT12, SSC1, SSC2, CCU6, High-Side Switch, WAKEUP, Bridge Driver, Charge Pump, Differential Unit, Math Divider, GPIOs, MONs, CSA and A/D Converter are each assigned to one dedicated interrupt vector; while UART1 and Timer2 or UART2, External Interrupt 2 and Timer21 share interrupt vectors. Two vectors are dedicated for External Interrupt 0 and 1.

Table 4 Interrupt Vector Table

Service Request	Node ID	Description
GPT1	0	GPTimer 1 Interrupt
GPT2	1	GPTimer 2 Interrupt
MU	2	MU interrupt / ADC2, VBG interrupt
ADC1	3	ADC10 Bit interrupt
CCU0	4	CCU6 node 0 interrupt
CCU1	5	CCU6 node 1 interrupt
CCU2	6	CCU6 node 2 interrupt
CCU3	7	CCU6 node 3 interrupt
SSC1	8	SSC1 interrupt (receive, transmit, error)
SSC2	9	SSC2 interrupt (receive, transmit, error)
UART1	10	UART1 interrupt (receive, transmit), Timer2, LIN sync, LIN
UART2	11	UART2 interrupt (receive, transmit), Timer21, External Interrupt (EINT2)
EXINT0	12	External interrupt (EINT0), wake-up
EXINT1	13	External interrupt (EINT1)
WAKEUP	14	Wake-up interrupt (generated by a wake-up event)
Math Div	15	Hardware Divider Unit Interrupt
rfu	16	Reserved for future use
CP	17	Charge Pump
BDRV	18	Bridge Driver

Table 4 Interrupt Vector Table (cont'd)

Service Request	Node ID	Description
HS	19	High Side Interrupt
CSA	20	Current Sense Amplifier Overcurrent Measurement
DU	21	Differential Unit - DPP1
MONx	22	MONx Interrupt
Port 2.x	23	Port 2.x - DPP1

Table 5 NMI Interrupt Table

Service Request	Node	Description
Watchdog Timer NMI	NMI	Watchdog Timer overflow
MI_CLK Watchdog Timer NMI	NMI	MI_CLK Watchdog Timer Overflow
Overtemperature NMI	NMI	System Overtemperature
Oscillator Watchdog NMI	NMI	Oscillator Watchdog
NVM Map Error NMI	NMI	NVM Map Error
ECC Error NMI	NMI	RAM / NVM Uncorrectable ECC Error
Supply Prewarning NMI	NMI	Supply Prewarning
Stack overflow	NMI	Stack Overflow

12 Math Divider Module

12.1 Features

The MATH Coprocessor includes the following features:

- Divide function with operand pre-processing and result post-processing
- AHB-Interface supports Byte/half word/ word Register access
- Supports fast execution kernel clock faster than interface clock

12.2 Introduction

The MATH Coprocessor (MATH) module supports the CPU in math-intensive computations with a Divider Unit (DIV) for signed and unsigned 32-bit division operations.

12.3 Block Diagram

Figure 17 shows a block diagram of the MATH Coprocessor.

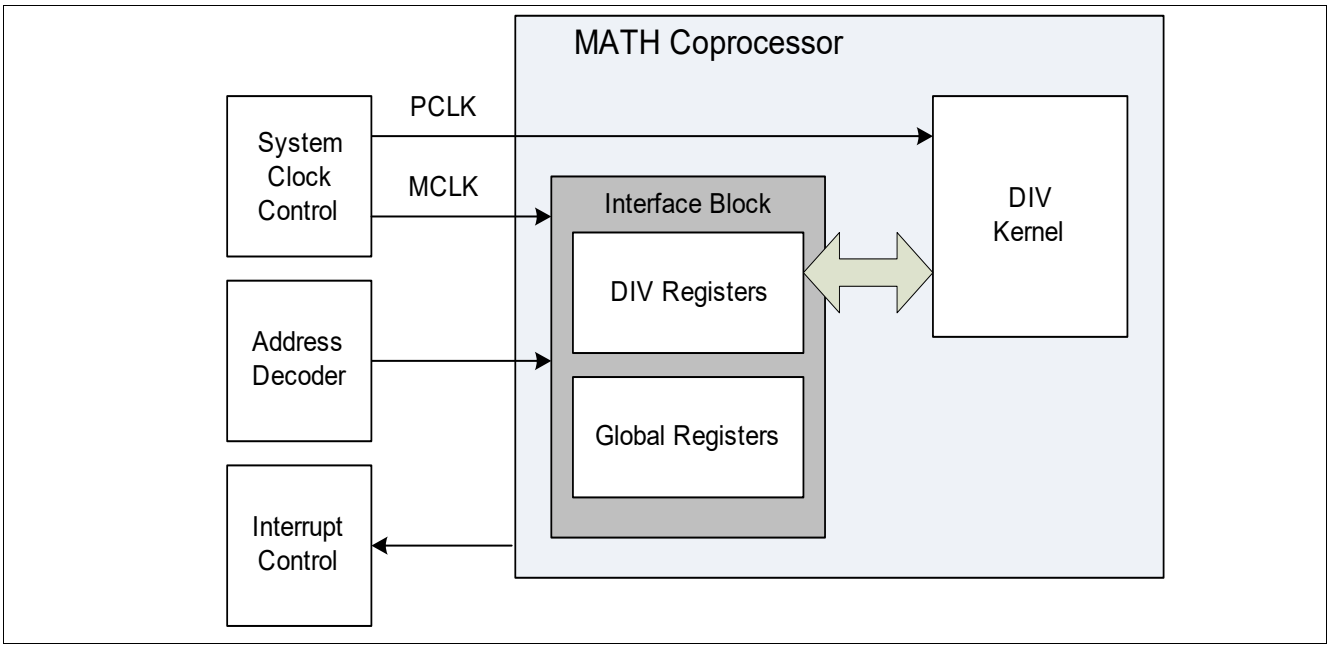

Figure 17 MATH Coprocessor Block Diagram

13 Watchdog Timer (WDT1)

13.1 Features

In Active Mode, the WDT1 acts as a windowed watchdog timer, which provides a highly reliable and safe way to recover from software or hardware failures.

The WDT1 is always enabled in Active Mode. In Sleep Mode, Stop Mode and Debug Mode the WDT1 is disabled.

Functional Features

- Watchdog Timer is operating with a from the system clock (f_{SYS}) independent clock source (f_{LP_CLK})
- Windowed Watchdog Timer with programmable timing (16, 32, 48, …, 1008ms period) in Active Mode
- Long open window (200 ms) after power-up, reset, wake-up
- Short open window (30 ms) to facilitate Flash programming
- System safety shutdown to Sleep Mode after 5 missed WDT1 services
- Watchdog is disabled in Debug Mode
- Watchdog cannot be deactivated in Normal Mode
- Watchdog reset is stored in reset status register

13.2 Introduction

The behavior of the Watchdog Timer in Active Mode is depicted in **Figure 18**.

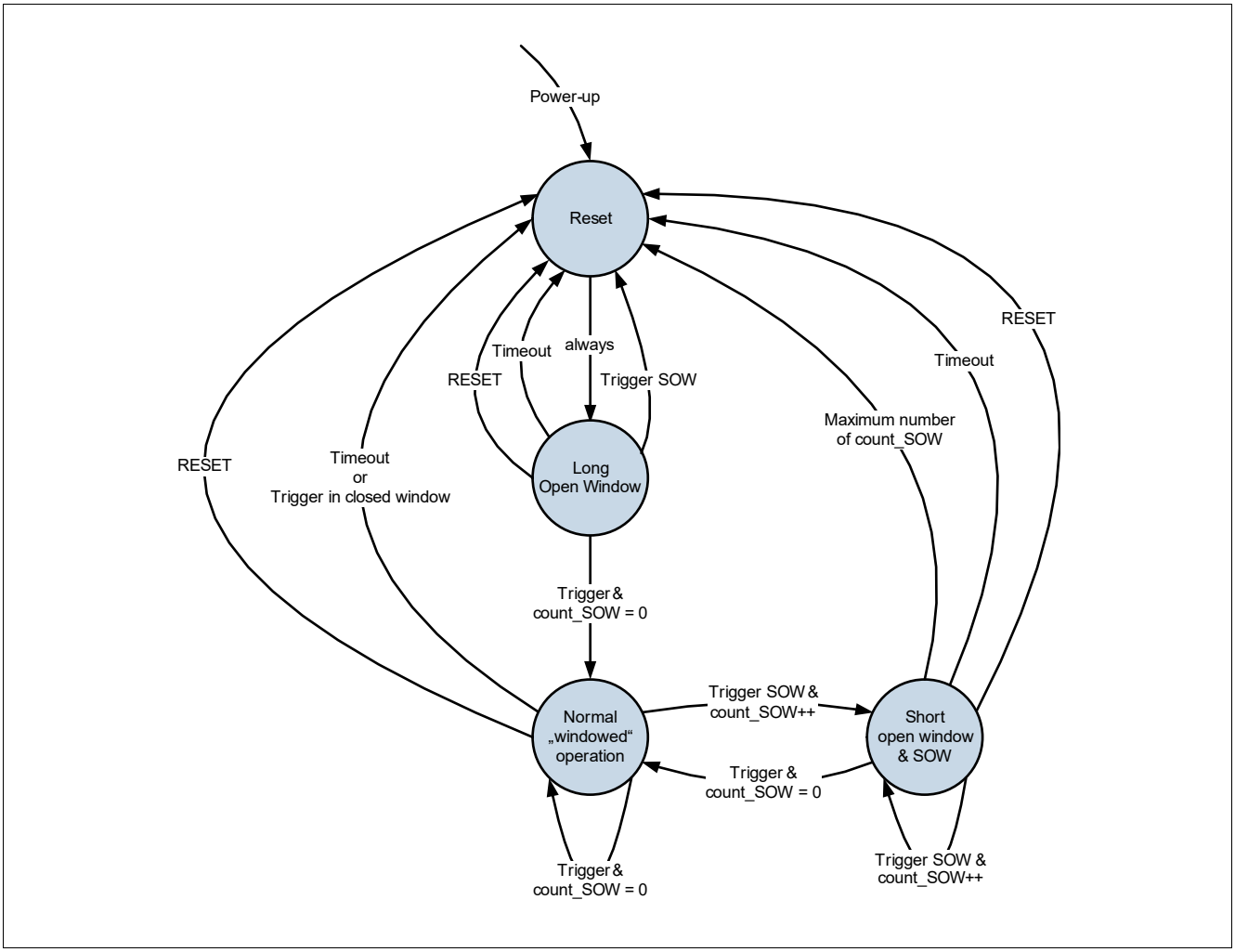

Figure 18 Watchdog Timer Behavior

14 GPIO Ports and Peripheral I/O

The TLE9853QX has 15 port pins organized into three parallel ports: Port 0 (P0), Port 1 (P1) and Port 2 (P2). Each port pin has a pair of internal pull-up and pull-down devices that can be individually enabled or disabled. P0 and P1 are bidirectional and can be used as general purpose input/output (GPIO) or to perform alternate input/output functions for the on-chip peripherals. When configured as an output, the open drain mode can be selected. On Port 2 (P2) analog inputs are shared with general purpose input.

14.1 Features

- 10 GPIOs and 5 analog inputs.
- Strong pull-up at Reset-pin and Hall-inputs (except P2.x)

Bidirectional Port Features (P0, P1)

- Configurable pin direction
- Configurable pull-up/pull-down devices
- Configurable open drain mode
- Configurable drive strength
- Transfer of data through digital inputs and outputs (general purpose I/O)
- Possible readback of pin status when GPIO is configured as output (short detection)
- Alternate input/output for on-chip peripherals

Analog Port Features (P2)

- Configurable pull-up/pull-down devices
- Transfer of data through digital inputs
- Alternate inputs for on-chip peripherals

14.2 Introduction

14.2.1 Port 0 and Port 1

Figure 19 shows the block diagram of an TLE9853QX bidirectional port pin. Each port pin is equipped with a number of control and data bits, thus enabling very flexible usage of the pin.

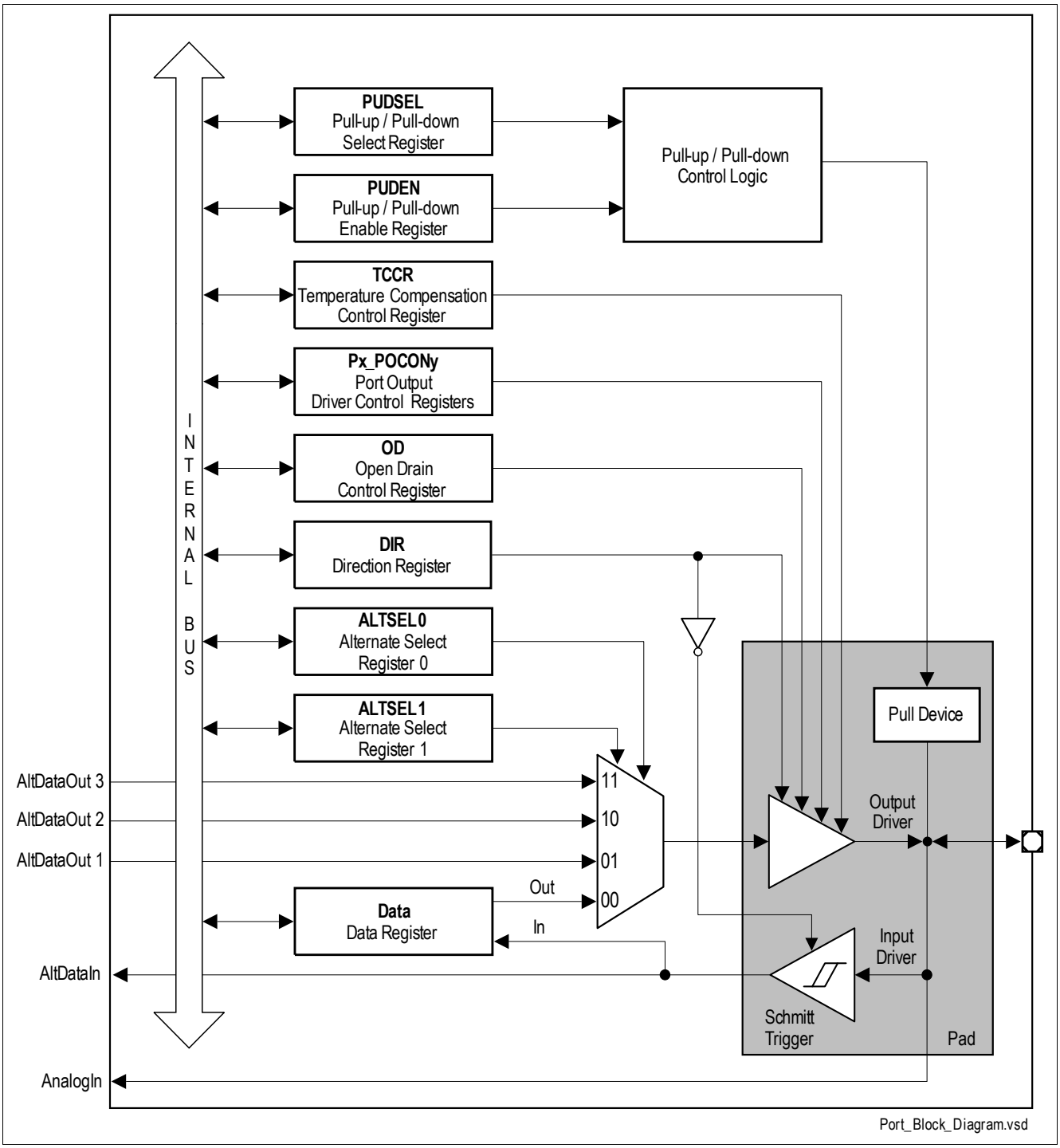

Figure 19 General Structure of Bidirectional Port

14.2.2 Port 2

Figure 20 shows the structure of an input-only port pin. Each P2 pin can only function in input mode. Register P2_DIR is provided to enable or disable the input driver. When the input driver is enabled, the actual voltage level present at the port pin is translated into a logic 0 or 1 via a Schmitt-Trigger device and can be read via the register P2_DATA. Each pin can also be programmed to activate an internal weak pull-up or pull-down device. Register P2_PUDSEL selects whether a pull-up or the pull-down device is activated while register P2_PUDEN enables or disables the pull device. The analog input (AnalogIn) bypasses the digital circuitry and Schmitt-Trigger device for direct feed-through to the ADC input channel.

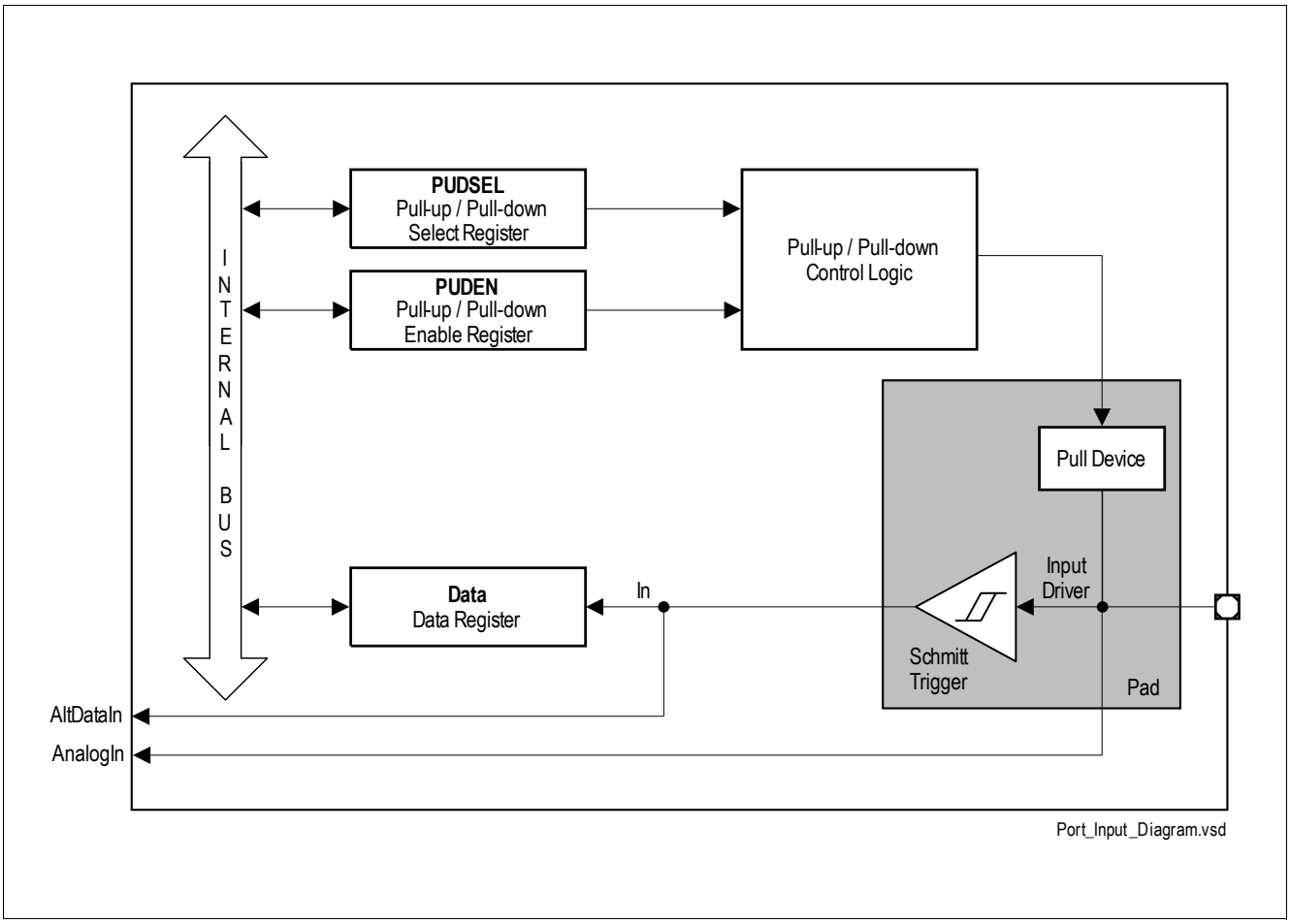

Figure 20 General Structure of Input Port

14.3 Functional Description

An overview of the available alternate functions of the GPIOs is provided in **Chapter 14.3.1**.

14.3.1 Alternate Functions

The following chapters describe the Portx.y mapping to their alternate functions.

14.3.1.1 Port 0 Functions

Port 0 alternate function mapping according **Table 6**

Table 6 Port 0 Input/Output Functions

Port Pin	Input/Output	Select	Connected Signal(s)	From/to Module
P0.0	Input	GPI	P0_DATA.P0	
		INP1	T12HR_0	CCU6
		INP2	T4INA	GPT12
		INP3	T2_0	Timer 2
		INP4	SWD_CLK	SWD
		INP5	EXINT2_3	SCU
	Output	GPO	P0_DATA.P0	
		ALT1	T3OUT_0	GPT12
		ALT2	EXF21_0	Timer 21
		ALT3	UART2_RXDO	UART2
P0.1	Input	GPI	P0_DATA.P1	
		INP1	T13HR_0	CCU6
		INP2	UART1_RXD	UART1
		INP3	T2EX_1	Timer 2
		INP4	T21_0	Timer 21
		INP5	EXINT0_3	SCU
		INP6	T4INC	GPT12
		INP7	CAPINA	GPT12
		INP8	SSC12_S_SCK_0	SSC1/2
		INP9	CC62_0	CCU6
	Output	GPO	P0_DATA.P1	
		ALT1	T6OUT_0	GPT12
		ALT2	CC62_0	CCU6
		ALT3	SSC12_M_SCK	SSC1/2

Table 6 **Port 0 Input/Output Functions** (cont'd)

Port Pin	Input/Output	Select	Connected Signal(s)	From/to Module
P0.2	Input	GPI	P0_DATA.P2	
		INP1	T2EUDA	GPT12
		INP2	CTRAP_0	CCU6
		INP3	SSC12_M_MRST_0	SSC1/2
		INP4	T21EX_0	Timer 21
		INP5	EXINT1_3	SCU
	Output	GPO	P0_DATA.P2	
		ALT1	SSC12_S_MRST	SSC1/2
		ALT2	UART1_TXD	UART1
		ALT3	EXF2_0	Timer 2
P0.3	Input	GPI	P0_DATA.P3	
		INP1	SSC1_S_SCK	SSC1
		INP2	T4EUDA	GPT12
		INP3	CAPINB	GPT12
		INP4	EXINT1_2	SCU
		INP5	T3EUDD	GPT12
		INP6	CCPOS0_1	CCU6
	Output	GPO	P0_DATA.P3	
		ALT1	SSC1_M_SCK	SSC1
		ALT2	T6OFL	GPT12
		ALT3	T6OUT_1	GPT12
P0.4	Input	GPI	P0_DATA.P4	
		INP1	SSC1_S_MTSR	SSC1
		INP2	CC60_0	CCU6
		INP3	T21_2	Timer 21
		INP4	EXINT2_2	SCU
		INP5	T3EUDA	GPT12
		INP6	CCPOS1_1	CCU6
	Output	GPO	P0_DATA.P4	
		ALT1	SSC1_M_MTSR	SSC1
		ALT2	CC60_0	CCU6
		ALT3	CLKOUT_0	SCU

Table 6 **Port 0 Input/Output Functions** (cont'd)

Port Pin	Input/Output	Select	Connected Signal(s)	From/to Module
P0.5	Input	GPI	P0_DATA.P5	
		INP1	SSC1_M_MRST	SSC1
		INP2	EXINT0_0	SCU
		INP3	T21EX_2	Timer 21
		INP4	T5INA	GPT12
		INP5	CCPOS2_1	CCU6
	Output	GPO	P0_DATA.P5	
		ALT1	SSC1_S_MRST	SSC1
		ALT2	COUT60_0	CCU6
		ALT3	LIN_RXD	LIN

14.3.1.2 Port 1 Functions

Port 1 alternate function mapping according **Table 7**

Table 7 Port 1 Input / Output Functions

Port Pin	Input/Output	Select	Connected Signal(s)	From/to Module
P1.0	Input	GPI	P1_DATA.P0	
		INP1	T3INC	GPT12
		INP2	CC61_0	CCU6
		INP3	SSC2_S_SCK	SSC2
		INP4	T4EUDB	GPT12
	Output	GPO	P1_DATA.P0	
		ALT1	SSC2_M_SCK	SSC2
		ALT2	CC61_0	CCU6
		ALT3	UART2_TXD	UART2
P1.1	Input	GPI	P1_DATA.P1	
		INP1	T6EUDA	GPT12
		INP2	T5INB	GPT12
		INP3	T3EUDC	GPT12
		INP4	SSC2_S_MTSR	SSC2
		INP5	T21EX_3	Timer 21
		INP6	UART2_RXD	UART2
	Output	GPO	P1_DATA.P1	
		ALT1	SSC2_M_MTSR	SSC2
		ALT2	COUT61_0	CCU6
		ALT3	EXF21_1	Timer 21
P1.2	Input	GPI	P1_DATA.P2	
		INP1	EXINT0_1	SCU
		INP2	T21_1	Timer 21
		INP3	T2INA	GPT12
		INP4	SSC2_M_MRST	SSC2
		INP5	CCPOS2_2	CCU6
	Output	GPO	P1_DATA.P2	
		ALT1	SSC2_S_MRST	SSC2
		ALT2	COUT63_0	CCU6
		ALT3	T3OUT_1	GPT12

Table 7 **Port 1 Input / Output Functions** (cont'd)

Port Pin	Input/Output	Select	Connected Signal(s)	From/to Module
P1.4	Input	GPI	P1_DATA.P4	
		INP1	EXINT2_1	SCU
		INP2	T21EX_1	Timer 21
		INP3	T2INB	GPT12
		INP4	T5EUDA	GPT12
		INP5	SSC12_S_MTSR_0	SSC1/2
		INP6	CCPOS1_2	CCU6
	Output	GPO	P1_DATA.P4	
		ALT1	CLKOUT_1	SCU
		ALT2	COUT62_0	CCU6
		ALT3	SSC12_M_MTSR	SSC1/2

14.3.1.3 Port 2 Functions

Port 2 alternate function mapping according **Table 8**

Table 8 Port 2 Input Functions

Port Pin	Input/Output	Select	Connected Signal(s)	From/to Module
P2.0	Input	GPI	P2_DATA.P0	
		INP1	EXINT1_1	SCU
		INP2	CCPOS0_2	CCU6
		INP3	T5EUDB	GPT12
		INP4	T13HR_2	CCU6
		ANALOG	AN0	ADC
P2.1	Input	GPI	P2_DATA.P1	
		INP1	CCPOS0_0	CCU6
		INP2	EXINT1_0	SCU
		INP3	T12HR_1	CCU6
		INP4	CC61_1	CCU6
		INP5	T4EUDD	GPT12
		INP6	T2EX_3	Timer2
		INP7	LIN_TXD	LIN
		INP8	SSC12_S_SCK_1	SSC1/2
		ANALOG	AN1	ADC
P2.2	Input / Output	GPI	P2_DATA.P2	
		INP1	T6EUDB	GPT12
		INP2	T2EX_0	Timer 2
		INP3	T12HR_2	CCU6
		INP4	CTRAP_2	CCU6
		ANALOG	AN2	ADC
P2.3	Input	GPI	P2_DATA.P3	
		INP1	CCPOS1_0	CCU6
		INP2	EXINT0_2	SCU
		INP3	CTRAP_1	CCU6
		INP4	T3IND	GPT12
		INP5	CC60_1	CCU6
		INP6	T2EUDB	GPT12
		INP7	T2_2	Timer2
		INP8	T2EX_2	Timer2
		INP9	SSC12_S_MTSR_1	SSC1/2
		ANALOG	AN3	ADC

Table 8 **Port 2 Input Functions** (cont'd)

Port Pin	Input/Output	Select	Connected Signal(s)	From/to Module
P2.7	Input	GPI	P2_DATA.P7	
		INP1	CCPOS2_0	CCU6
		INP2	EXINT2_0	SCU
		INP3	T13HR_1	CCU6
		INP4	CC62_1	CCU6
		INP5	T3EUDB	GPT12
		INP6	T4EUDC	GPT12
		INP7	T2_1	Timer2
		INP8	SSC12_M_MRST_1	SSC1/2
		ANALOG	AN7	ADC

15 General Purpose Timer Units (GPT12)

15.1 Features

15.1.1 Features Block GPT1

The following list summarizes the supported features:

- $f_{GPT}/4$ maximum resolution
- 3 independent timers/counters
- Timers/counters can be concatenated
- 4 operating modes:
  - Timer Mode
  - Gated Timer Mode
  - Counter Mode
  - Incremental Interface Mode
- Reload and Capture functionality
- Shared interrupt: Node 0

15.1.2 Features Block GPT2

The following list summarizes the supported features:

- $f_{GPT}/2$ maximum resolution
- 2 independent timers/counters
- Timers/counters can be concatenated
- 3 operating modes:
  - Timer Mode
  - Gated Timer Mode
  - Counter Mode
- Extended capture/reload functions via 16-bit capture/reload register CAPREL
- Shared interrupt: Node 1

15.2 Introduction

The General Purpose Timer Unit blocks GPT1 and GPT2 have very flexible multifunctional timer structures which may be used for timing, event counting, pulse width measurement, pulse generation, frequency multiplication, and other purposes.

They incorporate five 16-bit timers that are grouped into the two timer blocks GPT1 and GPT2. Each timer in each block may operate independently in a number of different modes such as Gated timer or Counter Mode, or may be concatenated with another timer of the same block.

Each block has alternate input/output functions and specific interrupts associated with it. Input signals can be selected from several sources by register PISEL.

The GPT module is clocked with clock f_{GPT}. f_{GPT} is a clock derived from f_{SYS}.

15.2.1 Block Diagram GPT1

Block GPT1 contains three timers/counters: The core timer T3 and the two auxiliary timers T2 and T4. The maximum resolution is $f_{GPT}/4$. The auxiliary timers of GPT1 may optionally be configured as reload or capture registers for the core timer.

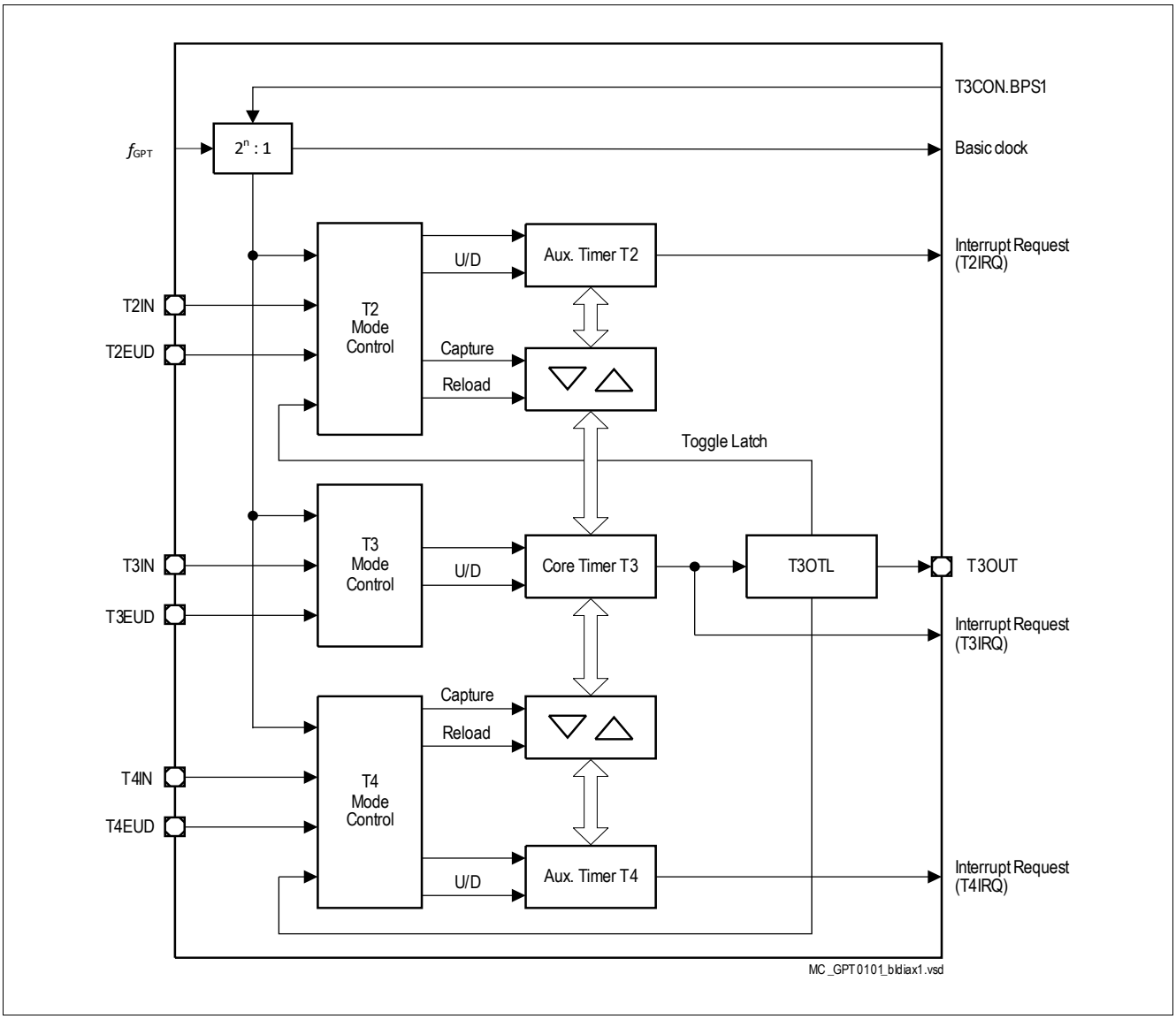

Figure 21 GPT1 Block Diagram (n = 2 … 5)

15.2.2 Block Diagram GPT2

Block GPT2 contains two timers/counters: The core timer T6 and the auxiliary timer T5. The maximum resolution is $f_{GPT}/2$. An additional Capture/Reload register (CAPREL) supports capture and reload operation with extended functionality.

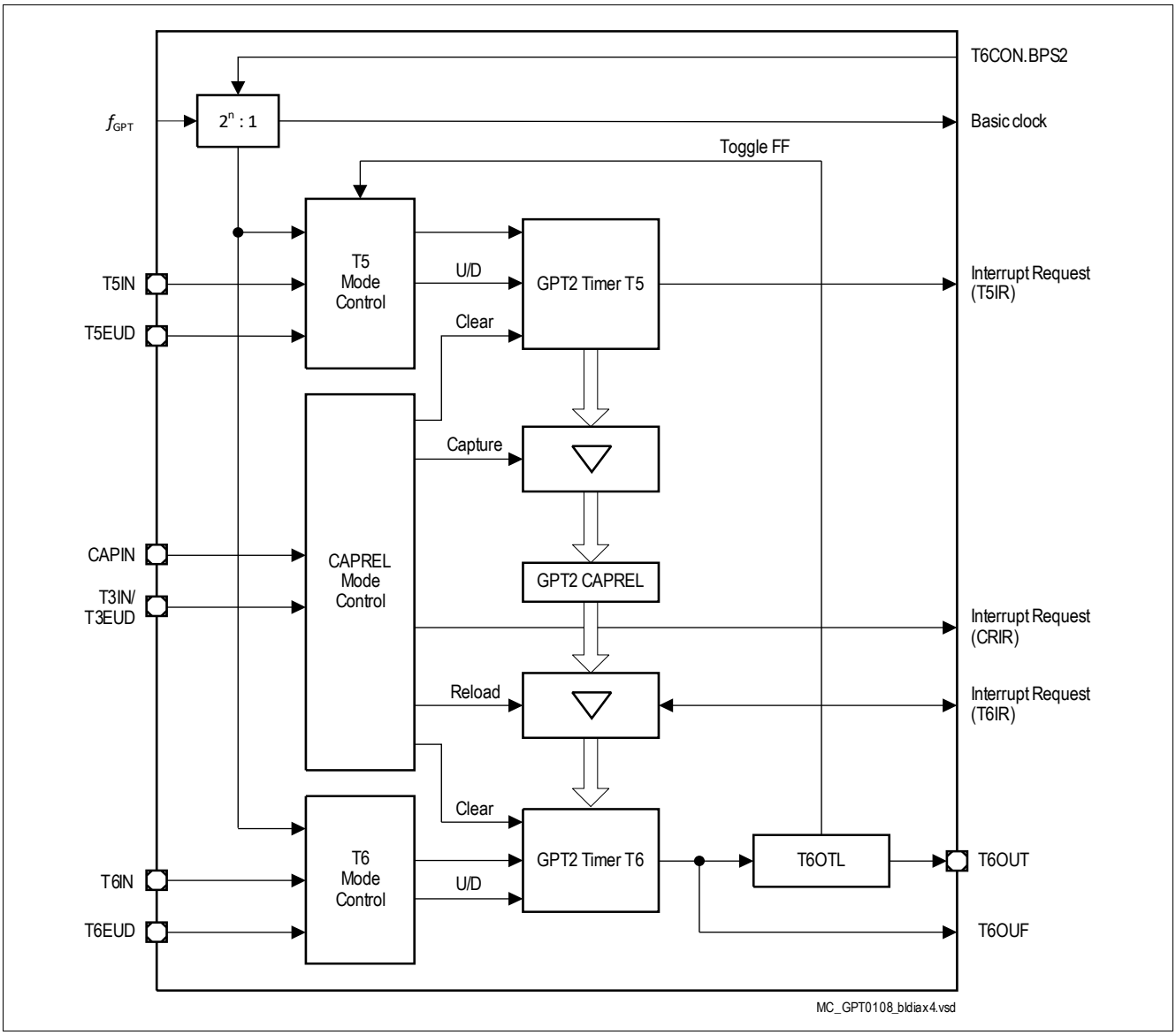

Figure 22 GPT2 Block Diagram

16 Timer2 and Timer21

16.1 Features

- 16-bit auto-reload mode
  - selectable up or down counting
- One channel 16-bit capture mode
- Baud-rate generator for U(S)ART

16.2 Introduction

Two functionally identical timers are implemented: Timer 2 and 21. The description refers to Timer 2 only, but applies to Timer 21 as well.

The timer modules are general purpose 16-bit timer. Timer 2 can function as a timer or counter in each of its modes. As a timer, it counts with an input clock of $f_{sys}/12$ (if prescaler is disabled). As a counter, Timer 2 counts 1-to-0 transitions on pin T2. In the counter mode, the maximum resolution for the count is $f_{sys}/24$ (if prescaler is disabled).

16.2.1 Timer2 and Timer21 Modes Overview

Table 9 Port Registers

Mode	Description
Auto-reload	**Up/Down Count Disabled** • Count up only • Start counting from 16-Bit reload value, overflow at $FFFF_H$ • Reload event configurable for trigger by overflow condition only, or by negative/positive edge at input pin T2EX as well • Programmable reload value in register RC2 • Interrupt is generated with reload events.
Auto-reload	**Up/Down Count Enabled** • Count up or down, direction determined by level at input pin T2EX • No interrupt is generated • Count up – Start counting from 16-Bit reload value, overflow at $FFFF_H$ – Reload event triggered by overflow condition – Programmable reload value in register RC2 • Count down – Start counting from $FFFF_H$, underflow at value defined in register RC2 – Reload event triggered by underflow condition – Reload value fixed at $FFFF_H$
Channel capture	• Count up only • Start counting from 0000_H, overflow at $FFFF_H$ • Reload event triggered by overflow condition • Reload value fixed at 0000_H • Capture event triggered by falling/rising edge at pin T2EX • Captured timer value stored in register RC2 • Interrupt is generated with reload or capture event

17 Capture/Compare Unit 6 (CCU6)

17.1 Feature Set Overview

This section gives an overview over the different building blocks and their main features.

Timer 12 Block Features

- Three capture/compare channels, each channel can be used either as capture or as compare channel
- Generation of a three-phase PWM supported (six outputs, individual signals for High Side and low-side switches)
- 16-bit resolution, maximum count frequency = peripheral clock
- Dead-time control for each channel to avoid short-circuits in the power stage
- Concurrent update of T12 registers
- Center-aligned and edge-aligned PWM can be generated
- Single-shot mode supported
- Start can be controlled by external events
- Capability of counting external events
- Multiple interrupt request sources
- Hysteresis-like control mode

Timer 13 Block Features

- One independent compare channel with one output
- 16-bit resolution, maximum count frequency = peripheral clock
- Concurrent update of T13 registers
- Can be synchronized to T12
- Interrupt generation at period-match and compare-match
- Single-shot mode supported
- Start can be controlled by external events
- Capability of counting external events

Additional Specific Functions

- Block commutation for Brushless DC-drives implemented
- Position detection via Hall-sensor pattern
- Noise filter supported for position input signals
- Automatic rotational speed measurement and commutation control for block commutation
- Integrated error handling
- Fast emergency stop without CPU load via external signal ($\overline{\text{CTRAP}}$)
- Control modes for multi-channel AC-drives
- Output levels can be selected and adapted to the power stage

17.2 Introduction

The CCU6 unit is made up of a Timer T12 Block with three capture/compare channels and a Timer T13 Block with one compare channel. The T12 channels can independently generate PWM signals or accept capture triggers, or they can jointly generate control signal patterns to drive AC-motors or inverters.

A rich set of status bits, synchronized updating of parameter values via shadow registers, and flexible generation of interrupt request signals provide means for efficient software-control.

Note: The capture/compare module itself is named CCU6 (capture/compare unit 6). A capture/compare channel inside this module is named CC6x.

17.2.1 Block Diagram

The Timer T12 can work in capture and/or compare mode for its three channels. The modes can also be combined (e.g. a channel works in compare mode, whereas another channel works in capture mode). The Timer T13 can work in compare mode only. The multi-channel control unit generates output patterns which can be modulated by T12 and/or T13. The modulation sources can be selected and combined for the signal modulation.

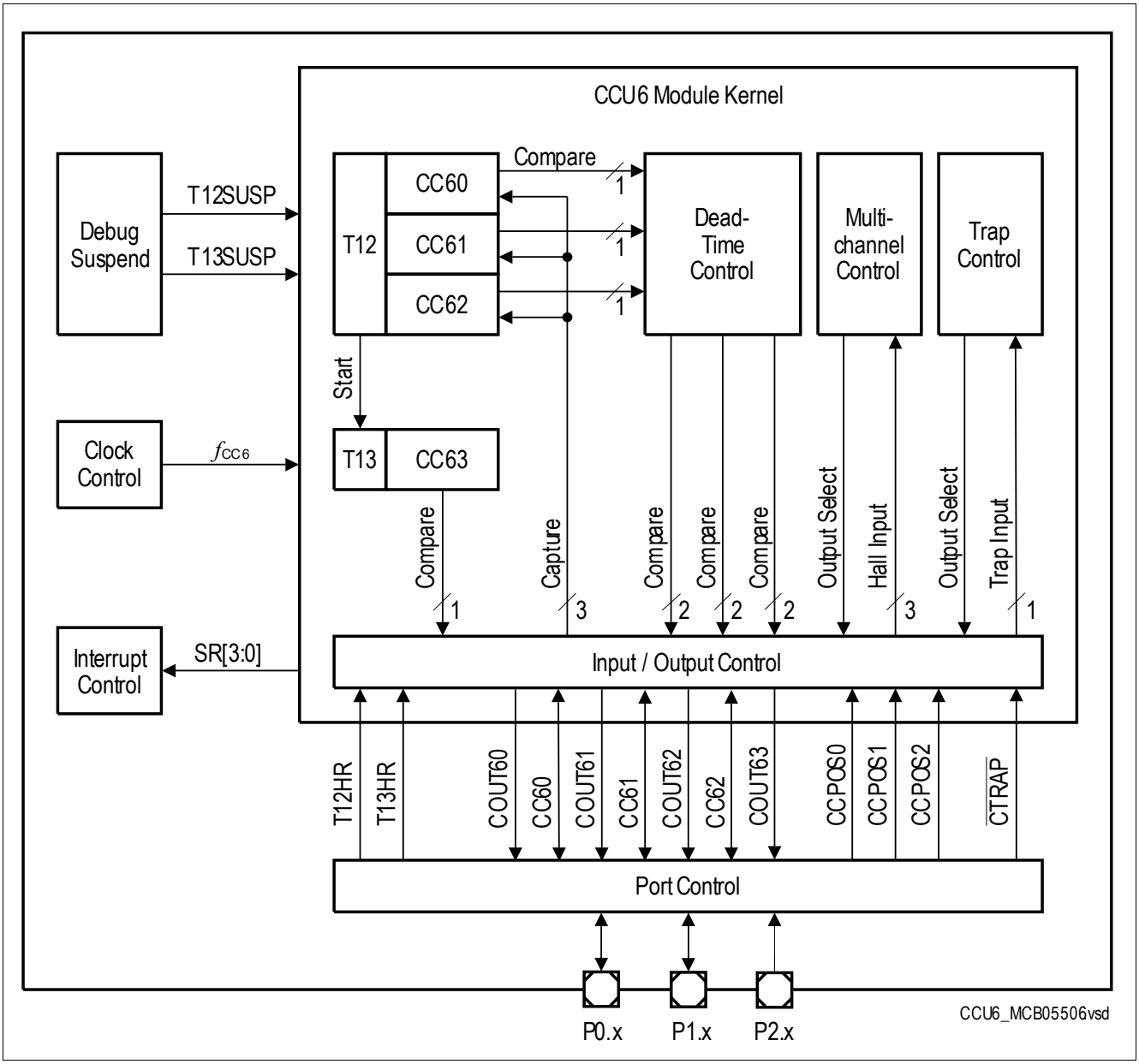

Figure 23 CCU6 Block Diagram

18 UART1/2

18.1 Features

- Full-duplex asynchronous modes
  - 8-Bit or 9-Bit data frames, LSB first
  - fixed or variable baud rate
- Receive buffered (1 Byte)
- Multiprocessor communication
- Interrupt generation on the completion of a data transmission or reception
- Baud-rate generator with fractional divider for generating a wide range of baud rates, e.g. 9.6kBaud, 19.2kBaud, 115.2kBaud, 125kBaud, 250kBaud, 500kBaud
- Hardware logic for break and sync byte detection
- for UART1: LIN support: connected to timer channel for synchronization to LIN baud rate

In all modes, transmission is initiated by any instruction that uses SBUF as a destination register. Reception is initiated in the modes by the incoming start bit if REN = 1.

The serial interface also provides interrupt requests when transmission or reception of the frames has been completed. The corresponding interrupt request flags are TI or RI, respectively. If the serial interrupt is not used (i.e., serial interrupt not enabled), TI and RI can also be used for polling the serial interface.

18.2 Introduction

The UART1/2 provide a full-duplex asynchronous receiver/transmitter, i.e., it can transmit and receive simultaneously. They are also receive-buffered, i.e., they can commence reception of a second byte before a previously received byte has been read from the receive register. However, if the first byte still has not been read by the time reception of the second byte is complete, the previous byte will be lost. The serial port receive and transmit registers are both accessed at Special Function Register (SFR) SBUF. Writing to SBUF loads the transmit register, and reading SBUF accesses a physically separate receive register.

18.2.1 Block Diagram

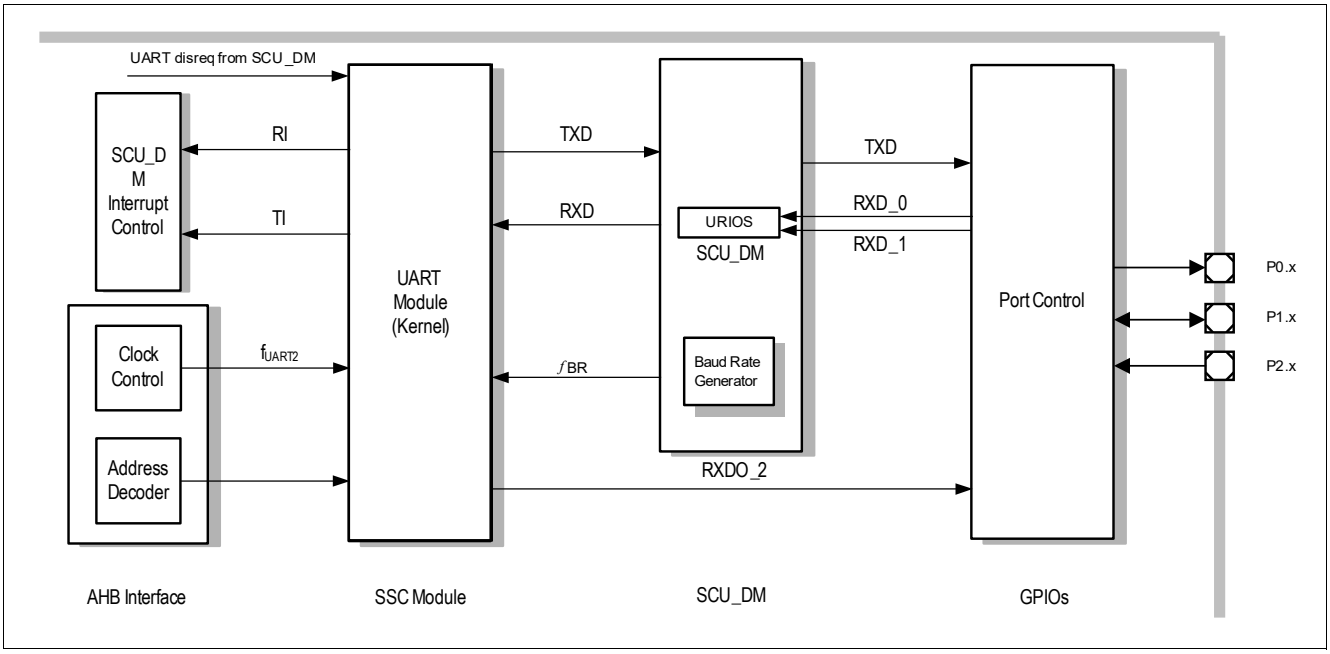

Figure 24 UART Block Diagram

18.3 UART Modes

The UART1/2 can be used in four different modes. In mode 0, it operates as an 8-Bit shift register. In mode 1, it operates as an 8-Bit serial port. In modes 2 and 3, it operates as a 9-Bit serial port. The only difference between mode 2 and mode 3 is the baud rate, which is fixed in mode 2 but variable in mode 3. The variable baud rate is set by the underflow rate on the dedicated baud-rate generator.

The different modes are selected by setting bits SM0 and SM1 to their corresponding values, as shown in **Table 10**.

Mode 1 example: 8 data bits, 1 start bit, 1 stop bit, no parity selection, 16 times oversampled, receive & transmit register double buffered, Tx/Rx IRQ(s).

Table 10 UART Modes

SM0	SM1	Operating Mode	Baud Rate
0	0	Mode 0: 8-Bit shift register	$f_{sys}/2$
0	1	Mode 1: 8-Bit shift UART	Variable
1	0	Mode 2: 9-Bit shift UART	$f_{sys}/64$ or $f_{sys}/32$
1	1	Mode 3: 9-Bit shift UART	Variable

19 LIN Transceiver

19.1 Features

General Functional Features

- Compliant to LIN2.2 Standard, backward compatible to LIN1.3, LIN2.0 and LIN 2.1
- Compliant to SAE J2602 (Slew Rate, Receiver hysteresis)

Special Features

- Measurement of LIN Master baudrate via Timer 2
- LIN can be used as Input/Output with SFR bits.
- TxD Timeout Feature
- Overcurrent limitation and overtemperature protection
- LIN module fully resettable via global enable bit

Operation Modes Features

- LIN Sleep Mode (LSLM)
- LIN Receive-Only Mode (LROM)
- LIN Normal Mode (LNM)
- High Voltage Input / Output Mode (LHVIO)

Slope Modes Features

- Normal Slope Mode (20 kbit/s)
- Low Slope Mode (10.4 kbit/s)
- Fast Slope Mode (62.5 kbit/s)
- Flash Mode (115 kbit/s, 250 kbit/s)

Wake-Up Features

- LIN Bus wake-up

19.2 Introduction

The LIN Module is a transceiver for the Local Interconnect Network (LIN) compliant to the LIN2.2 Standard, backward compatible to LIN1.3, LIN2.0 and LIN2.1. It operates as a bus driver between the protocol controller and the physical network. The LIN bus is a single wire, bi-directional bus typically used for in-vehicle networks, using baud rates between 2.4 kBaud and 20 kBaud. Additionally baud rates up to 62.5 kBaud are implemented.

The LIN Module offers several different operation modes, including a LIN Sleep Mode and the LIN Normal Mode. The integrated slope control allows to use several data transmission rates with optimized EMC performance. For data transfer at the end of line, a Flash Mode up to 115 kBaud is implemented. This Flash Mode can be used for data transfer under special conditions for up to 250 kbit/s (in production environment, point-to-point communication with reduced wire length and limited supply voltage).

19.2.1 Block Diagram

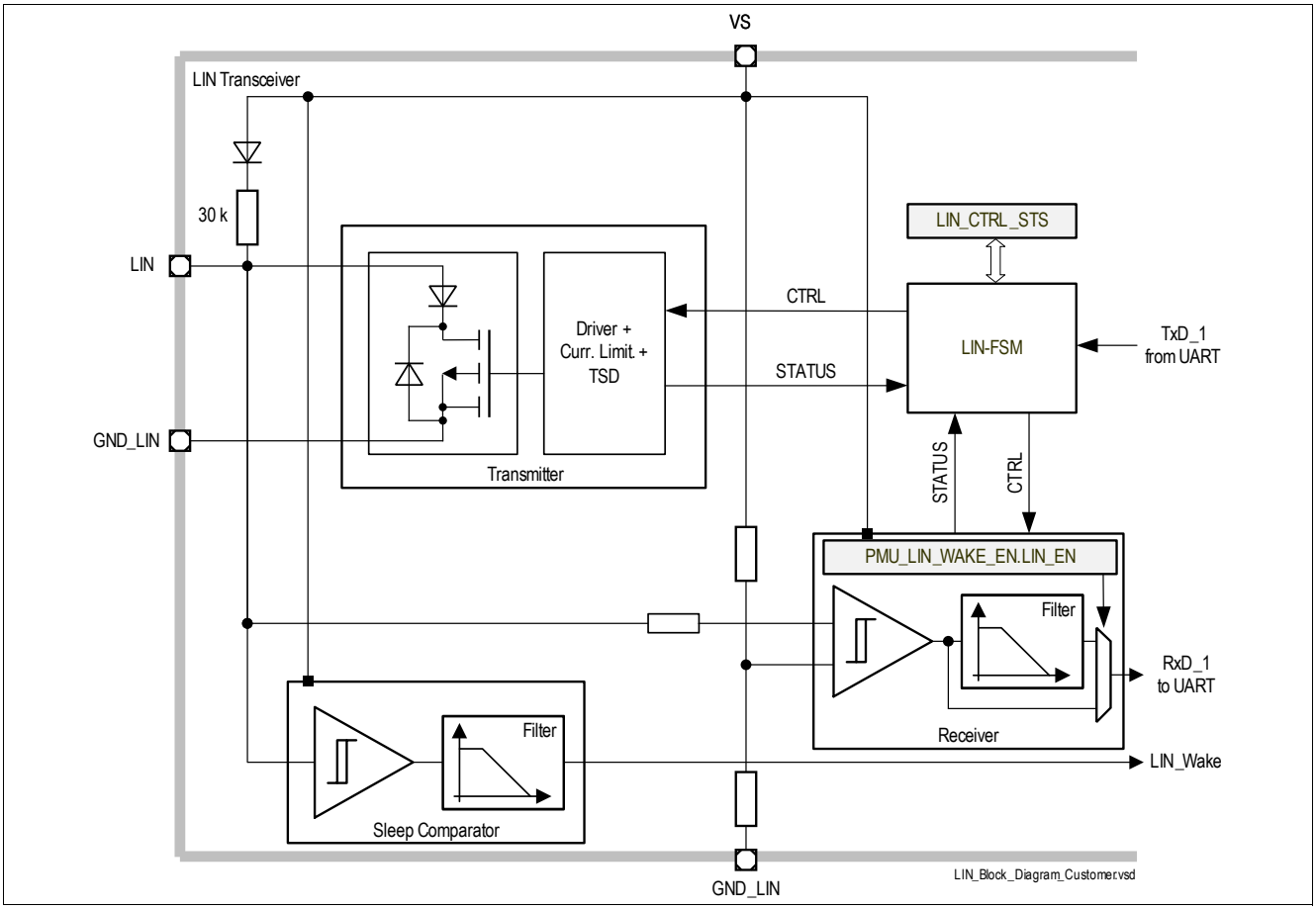

Figure 25 LIN Transceiver Block Diagram

20 High-Speed Synchronous Serial Interface SSC1/2

20.1 Features

- Master and Slave Mode operation
  - Full-duplex or half-duplex operation
- Transmit and receive double buffered
- Flexible data format
  - Programmable number of data bits: 2 to 16 bits
  - Programmable shift direction: Least Significant Bit (LSB) or Most Significant Bit (MSB) shift first
  - Programmable clock polarity: idle low or high state for the shift clock
  - Programmable clock/data phase: data shift with leading or trailing edge of the shift clock
- Variable baud rate, e.g. 250kBaud - 8MBaud
- Compatible with Serial Peripheral Interface (SPI)
- Interrupt generation
  - On a transmitter empty condition
  - On a receiver full condition
  - On an error condition (receive, phase, baud rate, transmit error)
  - On a transfer complete condition
- Port direction selection, see **Chapter 14**

20.2 Introduction

The High-Speed Synchronous Serial Interface (SSC) supports both full-duplex and half-duplex serial synchronous communication. The serial clock signal can be generated by the SSC internally (master mode), using its own 16-Bit baud-rate generator, or can be received from an external master (slave mode). Data width, shift direction, clock polarity, and phase are programmable. This allows communication with SPI-compatible devices or devices using other synchronous serial interfaces.

Data is transmitted or received on lines TXD and RXD, which are normally connected to the pins MTSR (MasterTransmit/Slave Receive) and MRST (Master Receive/Slave Transmit). The clock signal is output via line MS_CLK (Master Serial Shift Clock) or input via line SS_CLK (Slave Serial Shift Clock). Both lines are normally connected to the pin SCLK. Transmission and reception of data are double-buffered.

20.2.1 Block Diagram

Figure 26 shows all functional relevant interfaces associated with the SSC Kernel.

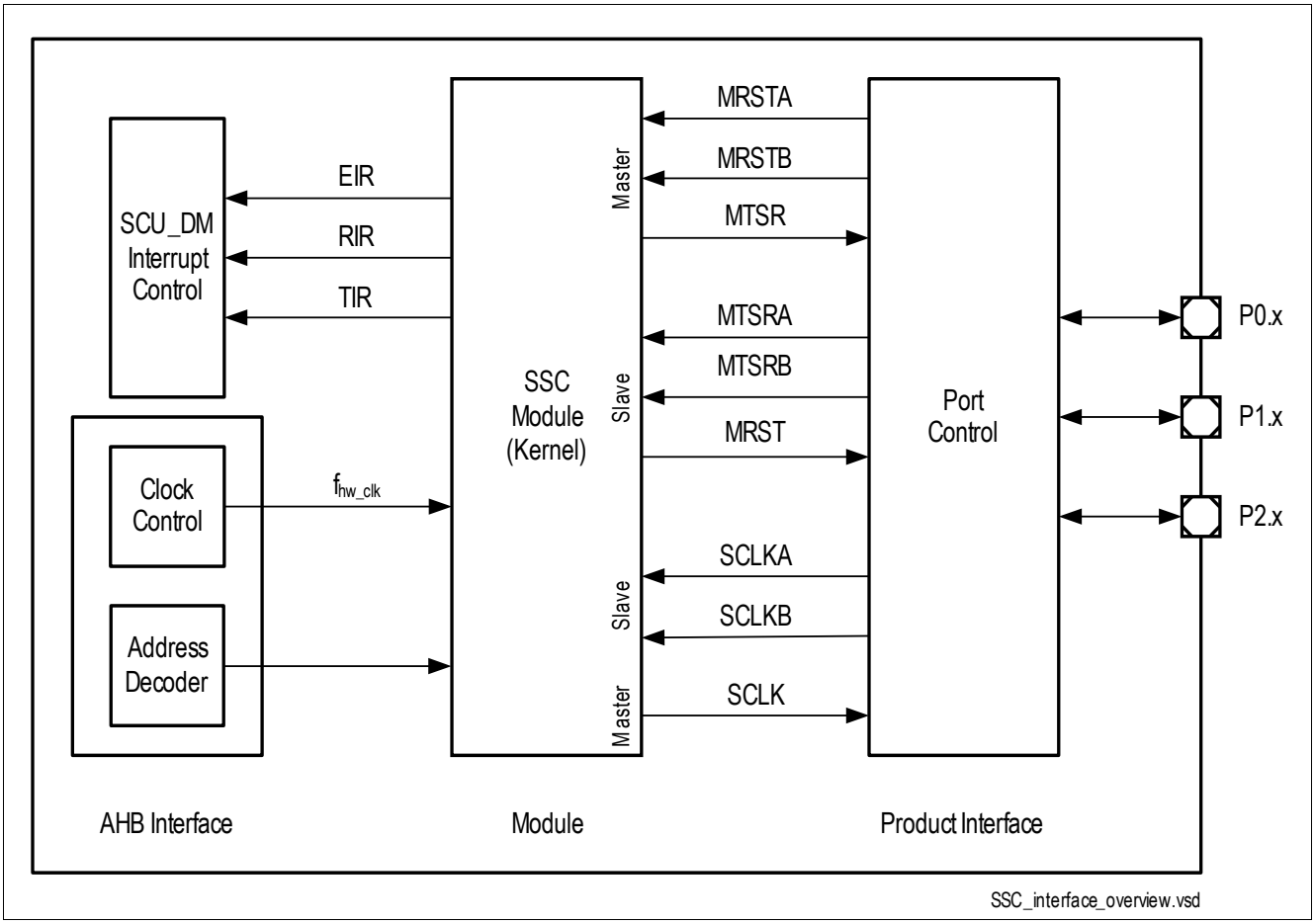

Figure 26 SSC Interface Diagram

21 Measurement Unit

21.1 Features

- 1 x 10-bit ADC with 12 inputs
- Supply Voltage Attenuators with attenuation of **VBAT_SENSE**, **VS**, **MONx**, **P2.x**, **CSA**.
- 1 x 8-bit ADC with 9 inputs
- Supply Voltage Attenuators with attenuation of **VS, VDDEXT, VSD, VCP, VDDP, VBG, VDDC, T_SENSE1 (Central Temperature Sensor), T_SENSE2 (Bridge Driver Charge Pump Temperature Sensor)**.
- Monitoring of PMU bandgap by 8-bit ADC to support functional safety requirements.
- Temperature Sensor to monitor the chip temperature and Bridge Driver Charge Pump temperature.
- Supplement Block with Reference Voltage Generation, Bias Current Generation, Voltage Buffer for NVM Reference Voltage, Voltage Buffer for Analog Module Reference Voltage and Test Interface.

21.2 Introduction

The measurement unit is a functional unit that comprises the following associated sub-modules:

Table 11 Measurement functions and associated modules

Module Name	Modules	Functions
Central Functions Unit	Bandgap reference circuit + current reference circuit	The bandgap-reference sub-module provides two reference voltages 1. an accurate reference voltage for the 10-bit and 8-bit ADCs. A local dedicated bandgap circuit is implemented to avoid deterioration of the reference voltage caused e.g. by crosstalk or ground voltage shift. 2. the reference voltage for the NVM module
10-bit ADC (ADC1)	10-bit ADC module with 12 multiplexed analog inputs	VBAT_SENSE, VS and MONx measurement. Five (5V) analog inputs from Port 2.x
8-bit ADC (ADC2)	8-bit ADC module with 9 multiplexed inputs	VS/VDDEXT/VSD/VCP/VDDP/VBG/VDDC/BDrv CP Temperature Sensor and Central Temperature Sensor measurement.
Temperature Sensor	Temperature sensor readout amplifier with two multiplexed ΔV_{be}-sensing elements	Generates output voltage which is a linear function of the local chip (Tj) temperature.
Measurement Core Module	Digital signal processing and ADC control unit	1. Generates the control signal for the 8-bit ADC 2 and the synchronous clock for the switched capacitor circuits (temperature sensor) 2. Performs digital signal processing functions and provides status outputs for interrupt generation.

21.2.1 Block Diagram

The Structure of the Measurement Functions Module is shown in the following figure.

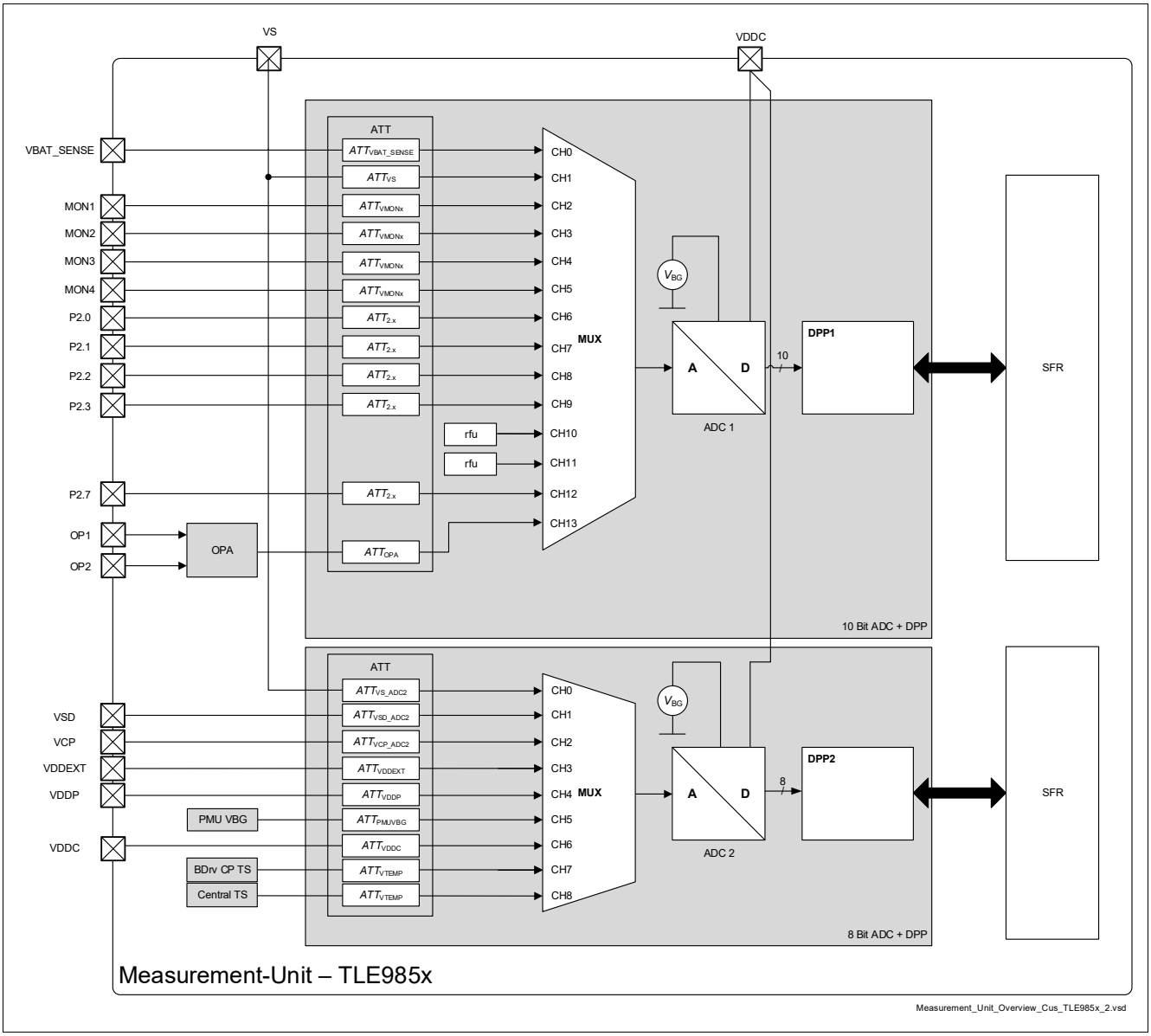

Figure 27 Measurement Unit-Overview

22 Measurement Core Module (incl. ADC2)

22.1 Features

- 9 individually programmable channels split into two groups of user configurable and non user configurable
- Individually programmable channel prioritization scheme for measurement unit
- Two independent filter stages with programmable low-pass and time filter characteristics for each channel
- Two channel configurations:
  - Programmable upper- and lower trigger thresholds comprising a fully programmable hysteresis
  - Two individually programmable trigger thresholds with limit hysteresis settings
- Status for all channel thresholds
- Operation down to reset threshold of entire system

22.2 Introduction

The basic function of this block is the digital postprocessing of several analog digitized measurement signals by means of filtering, level comparison and interrupt generation. The measurement postprocessing block is built of nine identical channel units attached to the outputs of the 9-channels 8-bit ADC (ADC2). It processes nine channels, where the channel sequence and prioritization is programmable within a wide range.

22.2.1 Block Diagram

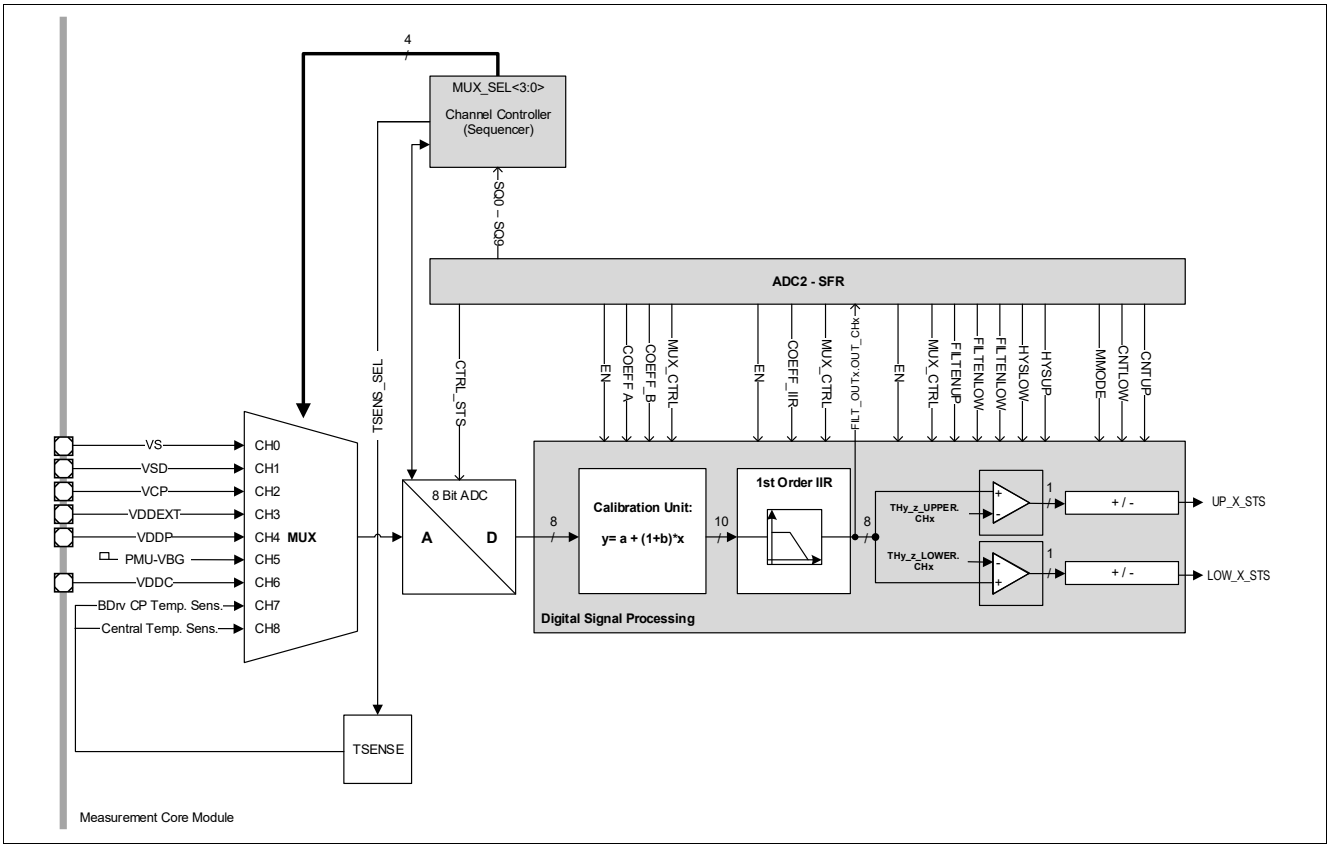

Figure 28 Module Block Diagram

23 Analog Digital Converter ADC10B (ADC1)

23.1 Features

The basic function of this block is the digital postprocessing of several analog digitized measurement signals by means of filtering, level comparison and interrupt generation. The measurement postprocessing block is built of the same number of identical channel units attached to the outputs of the 10-bit ADC. It processes allchannels, where the channel sequence and prioritization is programmable within a wide range.

Functional Features

- 10 Bit SAR ADC with conversion time of 17 clock cycles
- programmable clock divider for sequencer and ADC
- 12 individually programmable channels:
  - 6 HV Channels: VS, VBAT_SENSE, MON1...MON4
  - 5 LV Channels: P2.0, P2.1, P2.2, P2.3, P2.7
  - 1 Current-Sense Amplifier Channel
- all channels are fully calibrated; calibration can be enabled/disabled by user
- individually programmable channel prioritization scheme for digital postprocessing (dpp)
- two independent filter stages with programmable low-pass and time filter characteristics for each channel
- two channel configurations:
  - programmable upper- and lower trigger thresholds comprising a fully programmable hysteresis
  - two individually programmable trigger thresholds with limit hysteresis settings
- individually programmable upper threshold and lower threshold interrupts and status for all channel thresholds
- one additional differential channel (MON1-MON2) with postprocessing and interrupt generation
- ADC voltage reference completely integrated

Note: In case the MONx should be evaluated by the ADC1, it is recommended to add 6.8nF capacitors close to the MONx pin of the device, in order to build an external RC filter to limit the bandwidth of the input signal.

23.2 Introduction

23.2.1 Block Diagram

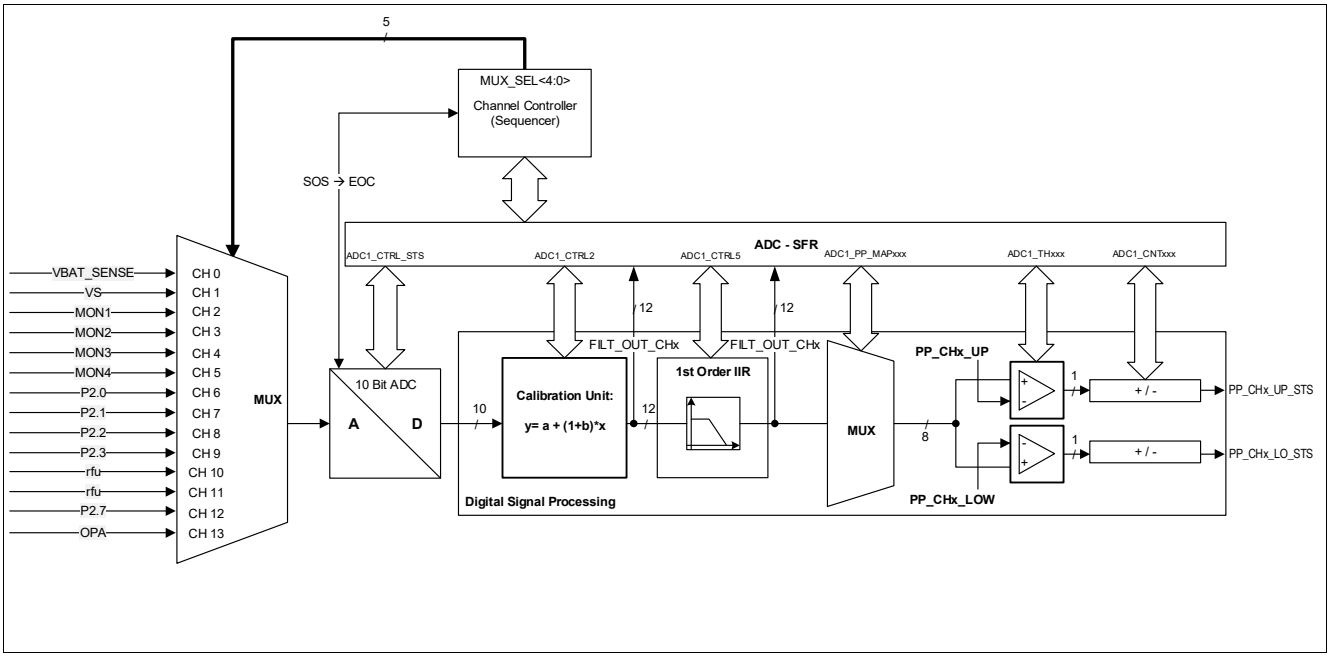

Figure 29 Module Block Diagram

24 High-Voltage Monitor Input

24.1 Features

- Four High-voltage inputs with VS/2 threshold voltage
- Wake capability for system stop mode and system sleep mode
- Edge sensitive wake-up feature configurable for transitions from low to high, high to low or both directions
- MON inputs can also be evaluated with ADC in Active Mode, using adjustable threshold values
- Selectable pull-up and pull-down current sources available

24.2 Introduction

This module is dedicated to monitor external voltage levels above or below a specified threshold. Each MONx pin can further be used to detect a wake-up event by detecting a level change by crossing the selected threshold. This applies to any power mode. Further more each MONx pin can be sampled by the ADC as analog input.

24.2.1 Block Diagram

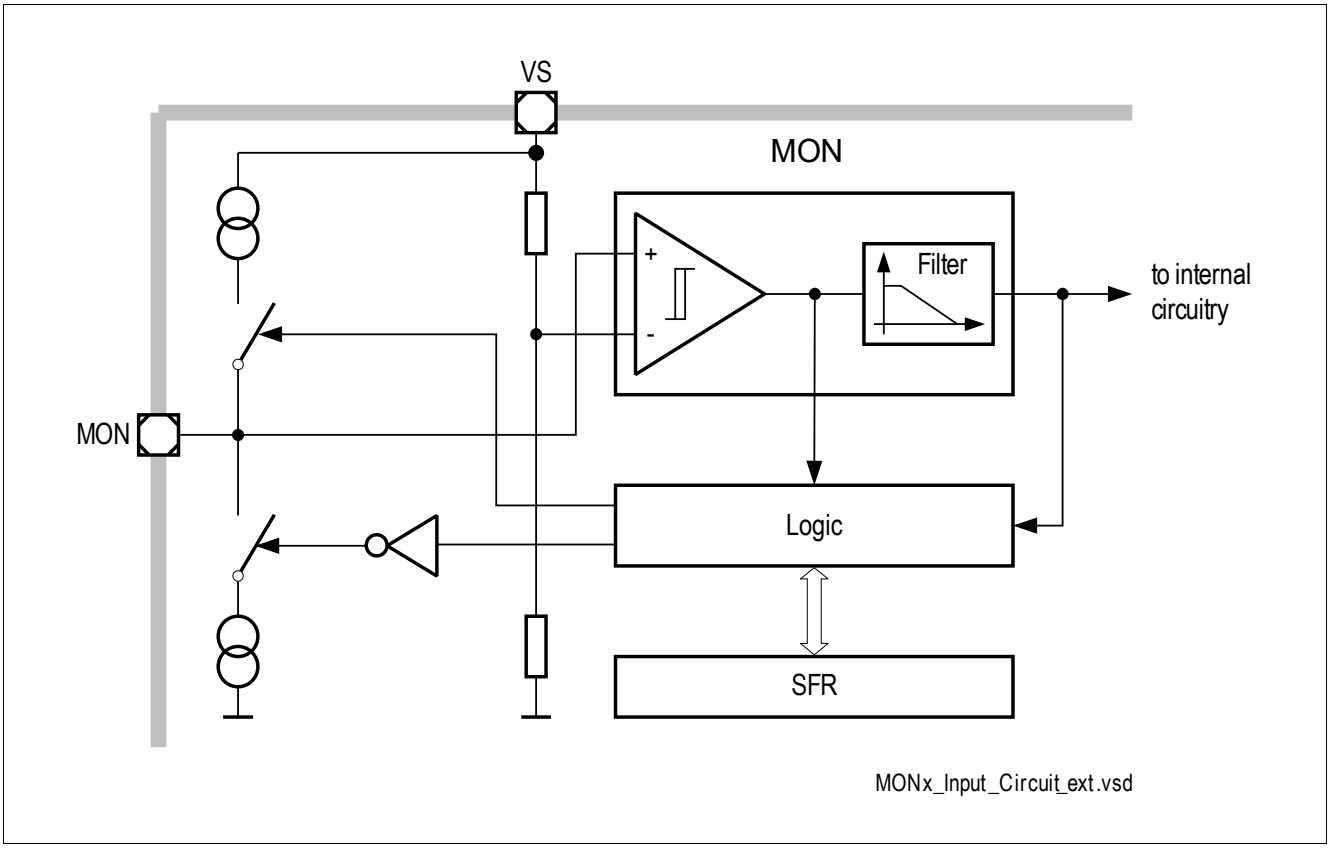

Figure 30 Monitoring Input Block Diagram

25 High-Side Switch

25.1 Features

The high-side switch is optimized for driving resistive loads. Only small line inductances are allowed. Typical applications are single or multiple LEDs of a dashboard, switch illumination or other loads that require a high-side switch.

A cyclic switch activation during Sleep Mode or Stop Mode of the system is also available.

Functional Features

- Multi purpose high-side switch for resistive load connections (only small line inductances are allowed)
- Overcurrent limitation
- Selectable current capability (25 mA/50 mA/100 mA/150 mA) by adjustable overcurrent detection with automatic shutdown
- Overtemperature detection and automatic shutdown
- Open load detection in on mode with open load current of typ. 1.4 mA
- Interrupt signalling of overcurrent, overtemperature and open load condition
- Cyclic switch activation in Sleep Mode and Stop Mode with cyclic sense support and reduced driver capability: max. 40 mA
- PWM capability up to 25 kHz
- Internal connection to System-PWM Generator (CCU6)
- Slew rate control for low EMI characteristic

Applications hints

- The voltage at HSx must not exceed the supply voltage by more than 0.3V to prevent a reverse current from HSx to VS.

25.2 Introduction

25.2.1 Block Diagram

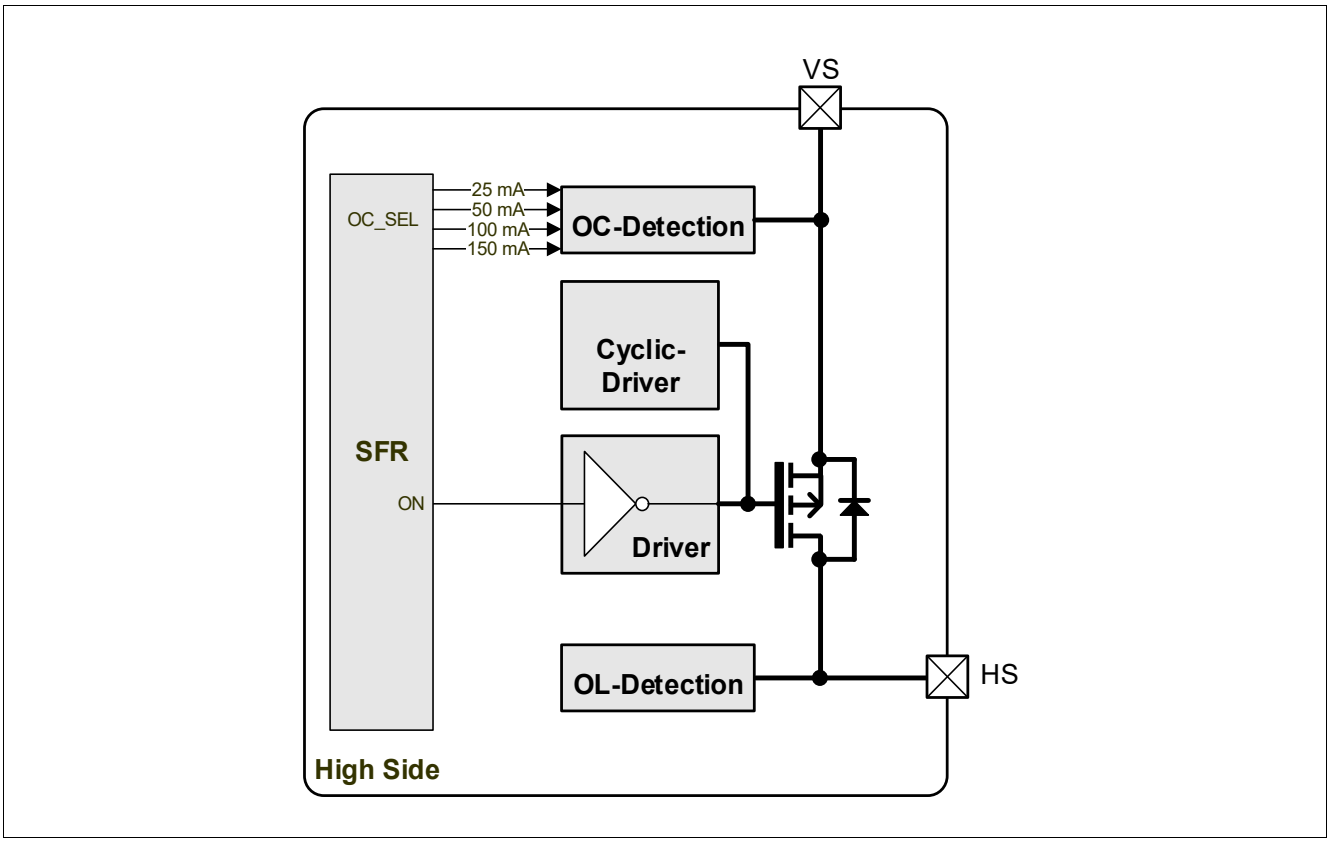

Figure 31 High-Side Module Block Diagram (incl. subblocks)

25.2.2 General

The high-side switch can generally be controlled in three different ways:

- In normal mode the output stage is fully controllable through the **SFR** Registers **HSx_CTRL**. Protection functions as overcurrent, overtemperature and open load detection are available.
- The PWM Mode can also be enabled by a **HSx_CTRL - SFR** bit. The PWM configuration has to be done in the corresponding PWM Module. All protection functions are also available in this mode. The maximum PWM frequency must not exceed 25 kHz (disabled slew rate control only).
- The high-side switch provides also the possibility of cyclic switch activation in all low power modes (Sleep Mode and Stop Mode). In this configuration it has limited functionality with limited current capability. Diagnostic functions are not available in this mode.

26 Bridge Driver (incl. Charge Pump)

26.1 Features

The Bridge Driver is intended to drive external normal-level MOSFETs in bridge configuration and provides many diagnostic possibilities to detect faults.

Functional Features

- **Flexible control** by SFRs of Bridge Driver module or PWM output signals of CCU6 module
- **Current-driven output stages** to control external n-channel MOSFET gates with flexibly programmable gate current profile
- **Adjustable cross-conduction protection**
- **High-current discharge mode** to reduce dead times and to keep external MOSFETs off during fast transients
- **Passive pull-down mode** to keep external MOSFETs off if the Bridge Driver is disabled
- **Brake mode** with reduced current consumption to statically switch on external MOSFETs
- **Hold mode** with low current consumption to switch on external low-side MOSFETs if the Bridge Driver is disabled
- **Timing measurements** of on/off delays and on/off slope durations
- **Adaptive control mode** with automatic adjustment of gate current values
- **Integrated 2-stage charge pump** for low-voltage operation and statical MOSFET gate control
- **Adjustable voltage monitoring** of Bridge Driver supply voltage (VSD) and charge pump output voltage (VCP)
- **Adjustable short-circuit detection** in on and off state
- **Open-load detection** in off state
- **Overtemperature** detection and shutdown

26.2 Introduction

26.2.1 Block Diagram

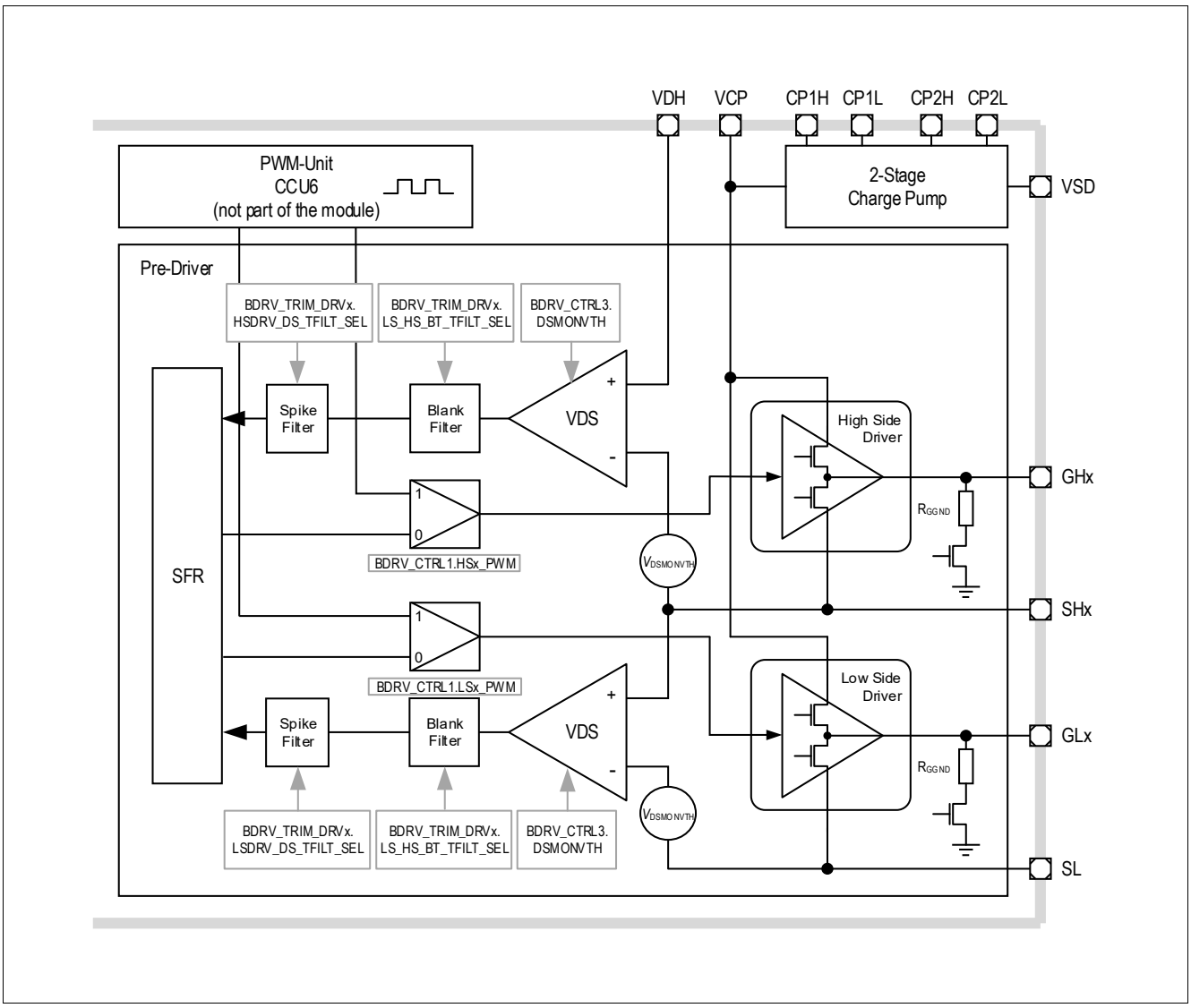

Figure 32 Driver Module Block Diagram (incl. System Connections)

26.2.2 Flexible Control

Each gate driver of the Bridge Driver module can be switched on and off in two different ways:

- Static Mode: The gate drivers are statically switched on or off by the Bridge Driver module SFRs.
- PWM Mode: The gate drivers are PWM-controlled by the System PWM Module (CCU6). The interconnection from the CCU6 output channels to the gate drivers is set up by the Bridge Driver module SFRs.

In both modes all diagnostic and protection functions (short-circuit, open-load, and overtemperature detection) are available.

26.2.3 Current-Driven Output Stages

The Bridge Driver output stages generate source and sink currents to charge and discharge the gates of the external n-channel MOSFETs. The gate current values are programmable to vary the slew rate at the bridge output.

26.2.3.1 Overview

Figure 33 shows an overview of one switching cylce of an external MOSFET.

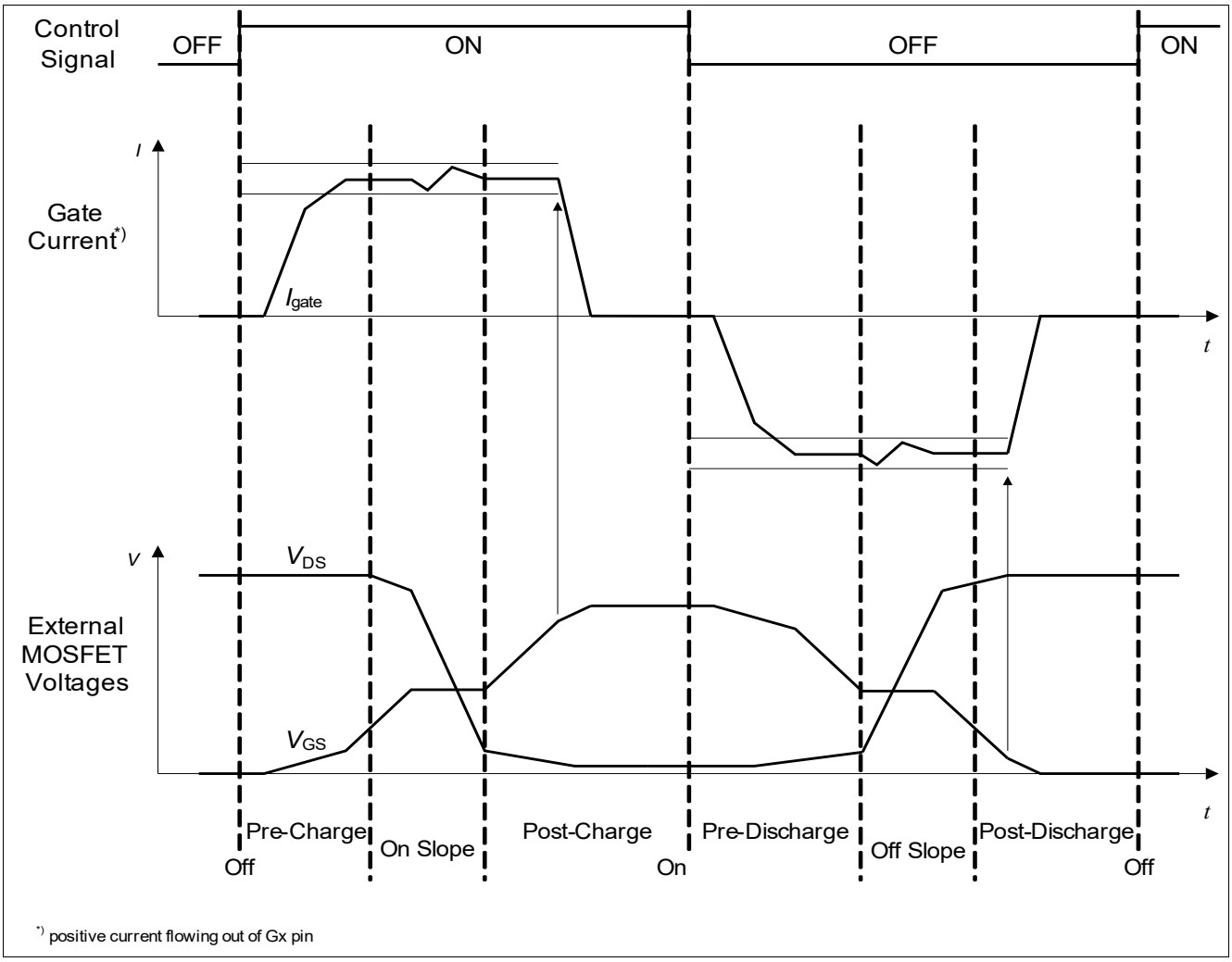

Figure 33 Switching cycle

The control input signal sets the gate driver either in charge or discharge mode, i.e. it generates a source current flowing out of the driver to charge the gate of an external MOSFET or a sink current flowing into the driver to discharge the gate of an external MOSFET.

Based on the changes on the drain-to-source voltage of the external MOSFET the charging and discharging phases can each be divided into three subphases.

Subphases of the charging phase:

- pre-charge subphase: the gate of the external MOSFET is pre-charged without change on V_{DS}; the external MOSFET is still off
- on slope subphase: the gate of the external MOSFET is further charged while the external MOSFET turns on and generates the on slope at V_{DS}

- post-charge subphase: the gate of the external MOSFET is post-charged until the maximum V_{GS} the gate driver is able to provide; the external MOSFET is on and its $R_{DS(on)}$ decreases to its minimum value

Subphases of the discharging phase:

- pre-discharge subphase: the gate of the external MOSFET is pre-discharged without significant change on V_{DS}; the external MOSFET is still on, but its $R_{DS(on)}$ increases
- off slope subphase: the gate of the external MOSFET is further discharged while the external MOSFET turns off and generates the off slope at V_{DS}
- post-discharge subphase: the gate of the external MOSFET is post-charged until V_{GS} is equal to 0V; the external MOSFET is off and is kept off

26.2.3.2 Switch-On

Figure 34 shows the detailed behavior of the gate driver output stage in the switch-on phase and the corresponding electrical characteristic parameters.

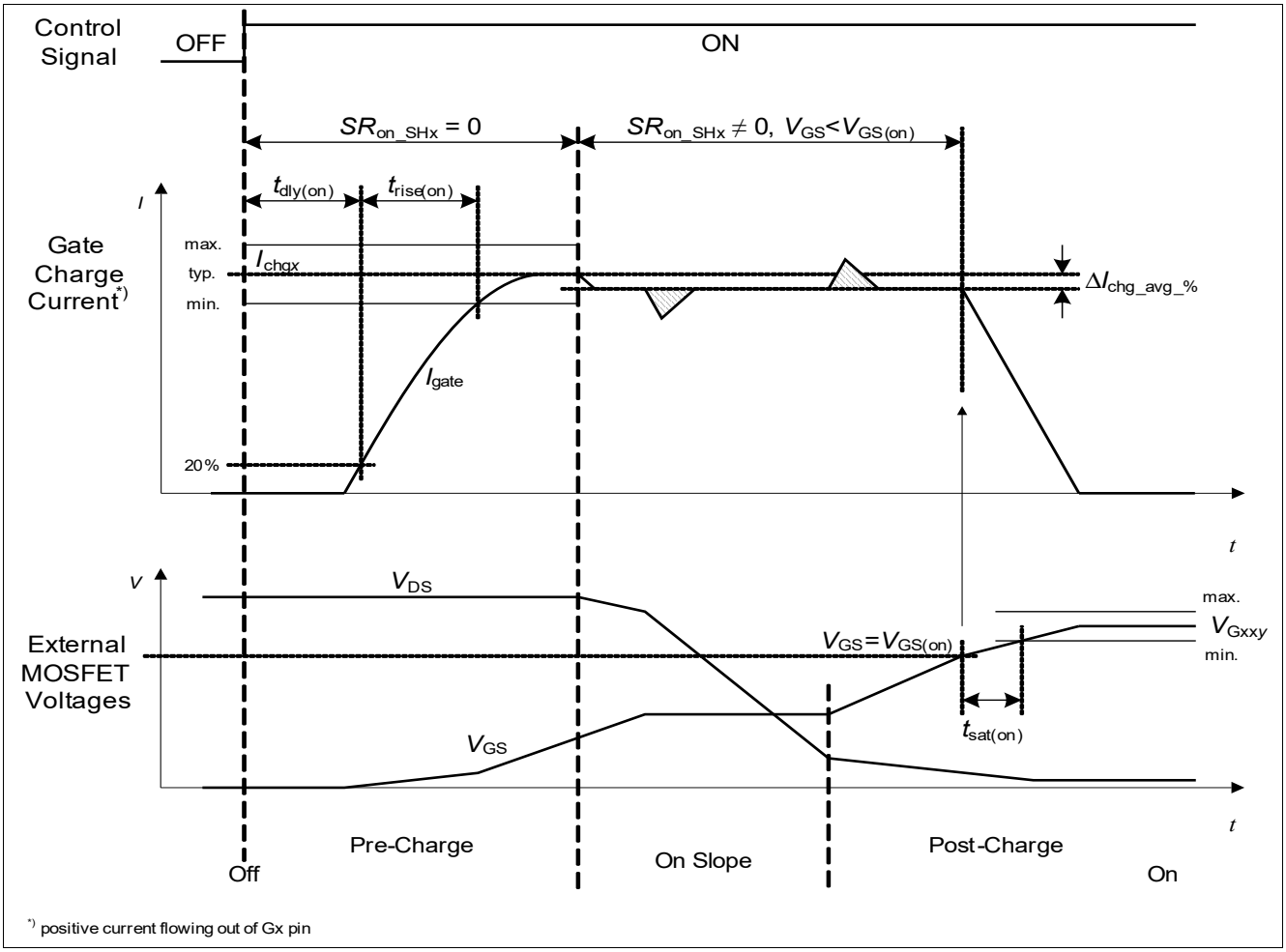

Figure 34 Detailed behavior of the gate driver output stage in the switch-on phase

After an initial turn-on delay time $t_{dly(on)}$ the gate charge current I_{gate} rises and after additional $t_{rise(on)}$ reaches its specified minimum limit $I_{chgx,min}$ and stays stable until the gate-to-source voltage of the external MOSFET reaches $V_{GS} = V_{GS(on)}$. During the slope at the corresponding SHx pin (i.e. $SR_{on_SHx} \neq 0$) the average gate current deviates less than $\Delta I_{chg_avg_\%}$ from the original set point I_{chgx}. The gate of the external MOSFET is further charged to the high-level output voltage of the gate driver V_{Gxxy}. The time from exceeding $V_{GS} = V_{GS(on)}$ and reaching $V_{Gxxy,min}$ is defined by $t_{sat(on)}$.

26.2.3.3 Switch-Off

Figure 35 shows the detailed behavior of the gate driver output stage in the switch-off phase and the corresponding electrical characteristic parameters.

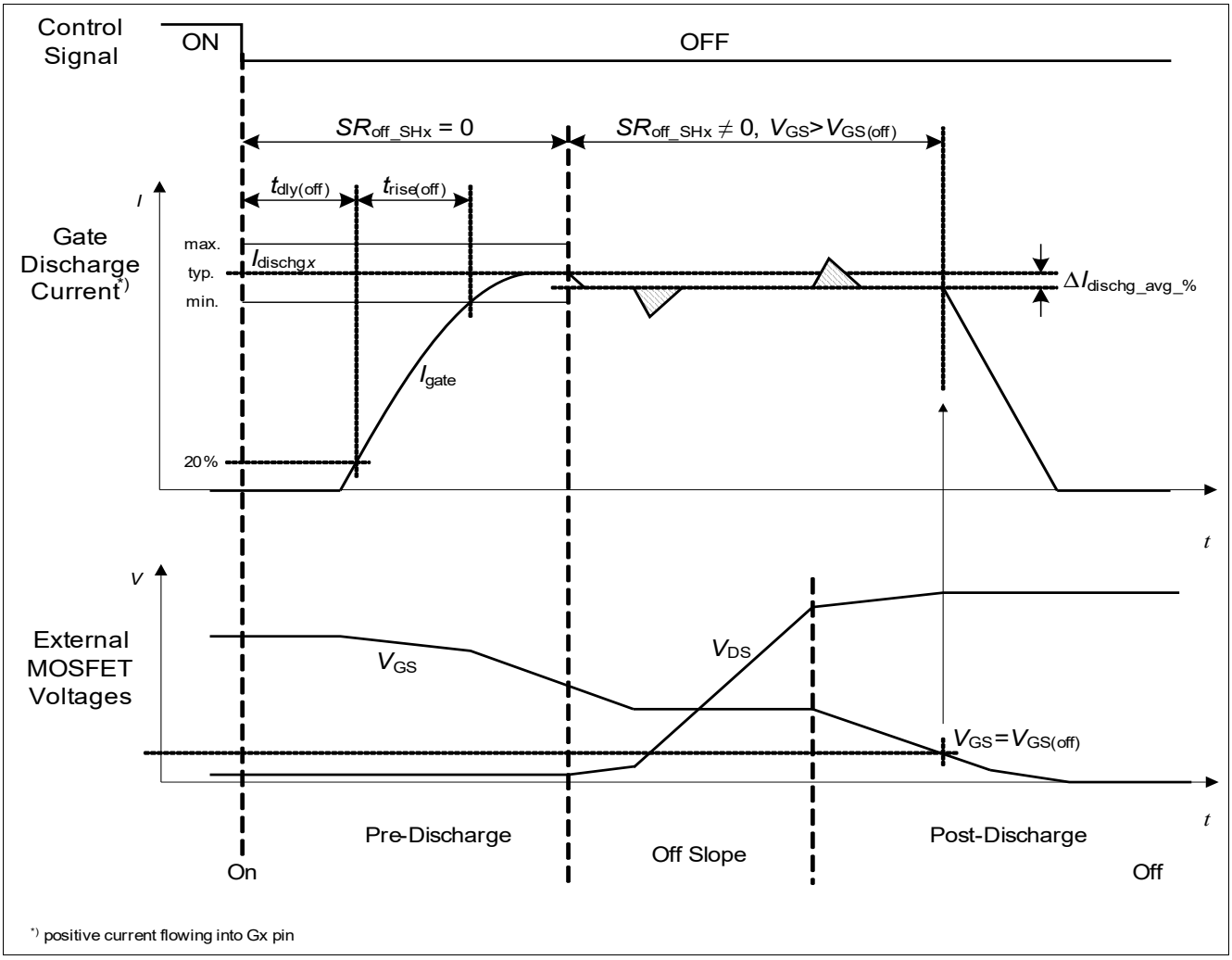

Figure 35 Detailed behavior of the gate driver output stage in the switch-off phase

After an initial turn-off delay time $t_{dly(off)}$ the gate discharge current I_{gate} rises and reaches its specified minimum limit $I_{dischgx,min}$ after $t_{rise(off)}$ and stays stable until the gate-to-source voltage of the external MOSFET reaches $V_{GS} = V_{GS(off)}$. During the slope at the corresponding SHx pin (i.e. $SR_{off_SHx} \neq 0$) the average gate discharge current deviates less than $\Delta I_{dischg_avg_\%}$ from the original set point $I_{dischgx}$.

26.2.3.4 Control Modes

There are two basic modes to program the gate current set point values of the output stages: constant mode and sequencer mode.

- In constant mode a simple gate current profile is defined by SFRs where the gate charging phase and the gate discharging phase each have two current set point values and one duration value. The second current set point value remains valid until the driver changes from charge mode to discharge mode or vice versa and is intended to statically keep on or off the external MOSFET at a reduced gate current level to be robust against external shorts at the gate pin.

- In sequencer mode an advanced gate current profile is defined by SFRs where the gate charging phase and the gate discharging phase each are split into consecutive sub phases with individual current set point values and duration values (see **Figure 36**):
  - For the gate charging phase 5 current set point values ($i_{x(on)}$) and 4 duration values ($t_{x(on)}$) are defined by SFRs.
  - The fifth current setpoint value $I_{5(on)}$ remains valid until the driver changes to discharge mode. This charge current is intended to statically keep on the external MOSFET (e.g. driving an external R_{GS}) at a reduced gate current level to be robust against external gate-to-source shorts.
  - For the gate discharging phase 5 current set point values ($i_{x(off)}$) and 4 duration values ($t_{x(off)}$) are defined by SFRs.
  - The fifth current setpoint value $I_{5(off)}$ remains valid until the driver changes to charge mode. This discharge current is intended to statically keep off the external MOSFET (e.g. during fast voltage transients or EMI) at a reduced gate current level to be robust against external gate-to-drain shorts.
  - At the transition between two gate current set points the actual gate driver output current settles within $t_{set(seq)}$ to the new gate current set point (see **Figure 37**).

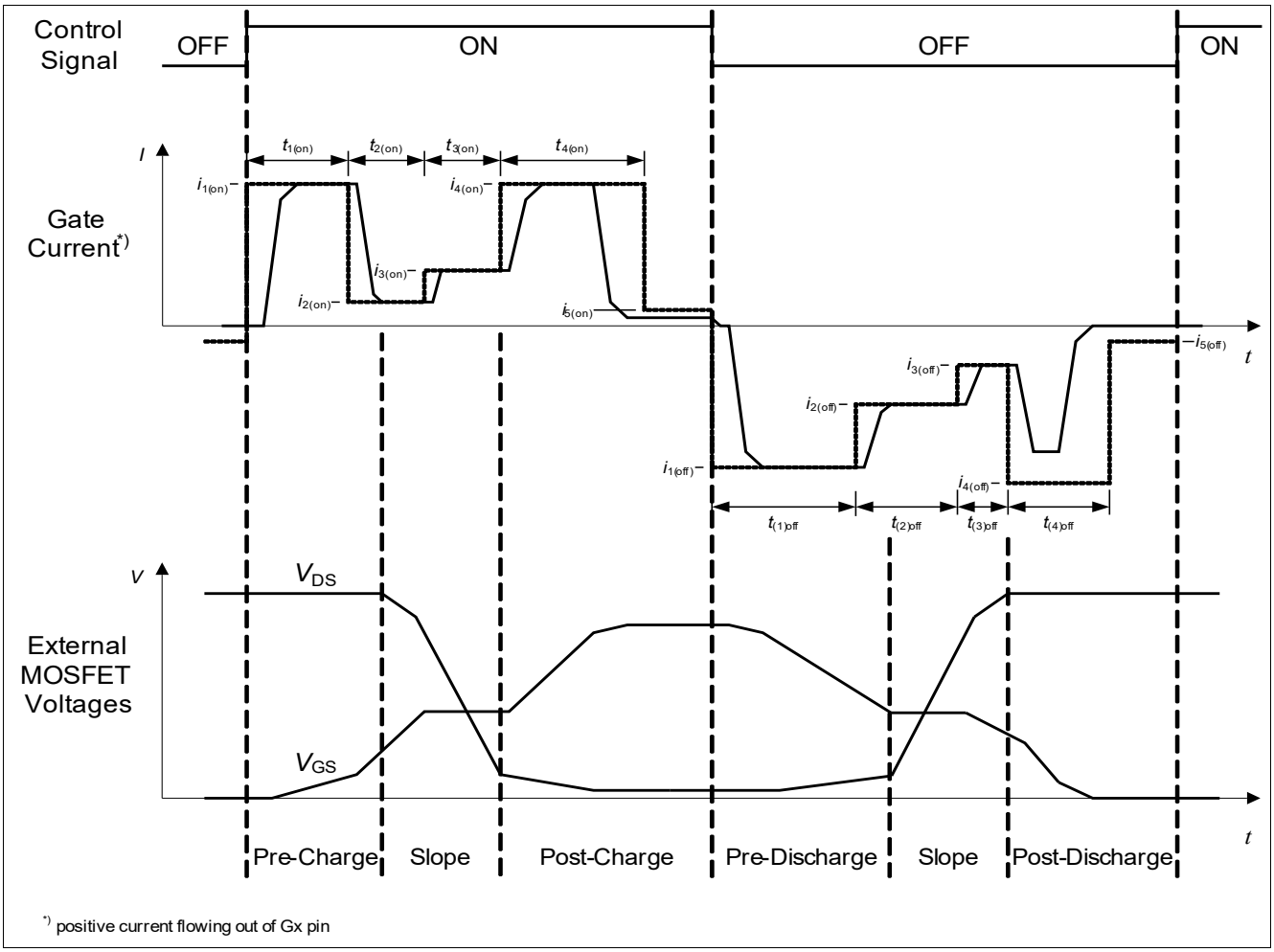

Figure 36 Gate current set point values generated by the sequencer

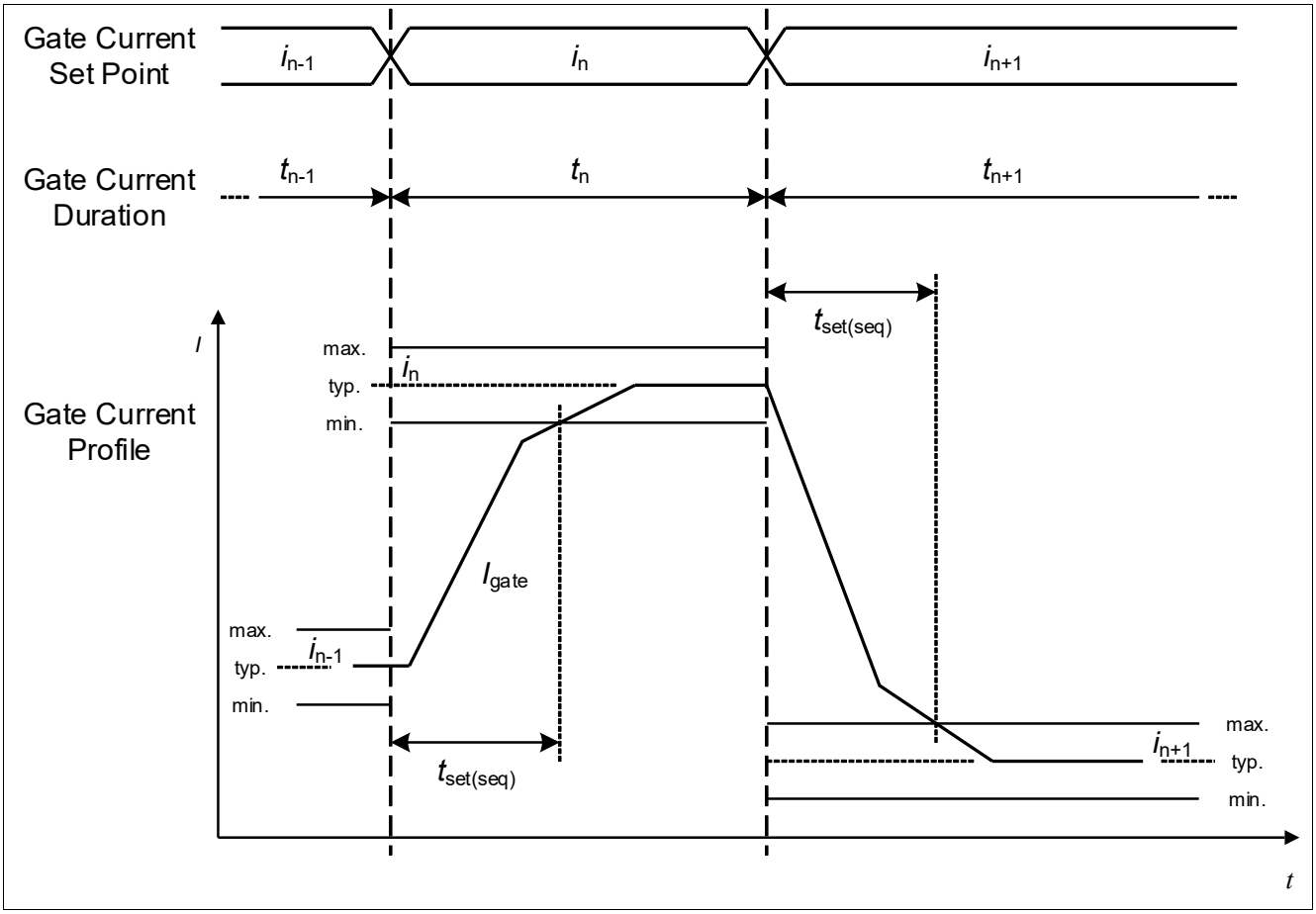

Figure 37 Gate current settling time

26.2.4 Adjustable Cross-Conduction Protection

The Bridge Driver protects half bridges of external MOSFETs against cross conduction. After switching off one of the MOSFETs of a half bridge the complementary MOSFET cannot be switched on for an optionally programmable time defined by SFRs.

26.2.5 High-Current Discharge Mode

The high-current discharge mode provides a low-ohmic path between the Gx and Sx pins to do a fast discharge of the external MOSFET gate and keep the external MOSFET off during fast voltage transients at its drain or source terminals.

The high-current discharge mode is activated in the following situations:

- in the case of an emergency shutdown after detection of an error condition,
- if the complementary external MOSFET is switched on to avoid cross conduction in the external half bridge.

If the adjustable cross-conduction protection feature is enabled the high-current discharge mode is delayed and activated at the same time than the switch-on control signal of the complementary MOSFET.

26.2.6 Passive Pull-Down Mode

If the Bridge Driver module is disabled the passive pull-down mode activates resistors R_{GGND} between the Gx pins and ground to passively keep discharged the gates of the external MOSFETs. During normal operation these pull-down resistors are switched off.

26.2.7 Brake Mode

In Brake Mode either both external high-side MOSFETs or both external low-side MOSFETs are statically switched on to short circuit the motor coil to brake the motor or keep it actively blocked during standstill. Since in brake mode no PWM capability is needed the charge pump is set into low-power mode to reduce the current consumption I_{VSD_BK} from the VSD pin.

26.2.8 Hold Mode

In Hold Mode the external low-side MOSFETs can be switched to an auxiliary gate voltage V_{Gxx_HM} to terminate the motor pins in all cases where the Bridge Driver and its charge pump is disabled (including stop mode and sleep mode where the Bridge Driver is disabled by default). This leads to low current consumption I_{VSD_SMHM} and I_{VSD_STPMHM} from the VSD pin. The Hold Mode is configured by SFRs in the Power Management Unit where the behavior during stop or sleep mode is defined. The configuration includes the channel-individual selection between static and cyclic activation of the Hold mode and programmable timing.

Note: In Hold Mode the monitoring and protection of the Bridge Driver is not available.

26.2.9 Timing Measurements

The Bridge Driver provides fast comparators with low propagation delay t_{cdly} at the SHx pins to measure on and off delays $t_{sdly(on)}$ and $t_{sdly(off)}$ between changes on the control signals and the corresponding slopes at the SHx pins. Additionally, these comparators are able to measure the on and off slope durations $t_{sdur(on)}$ and $t_{sdur(off)}$ at the SHx pins. The measured values are stored in SFRs for further evaluation by software or by the adaptive control mode (see **Chapter 26.2.10**).

Figure 38 shows the thresholds $V_{SH(high)}$ and $V_{SH(low)}$ and propagation delay t_{cdly} of the fast comparators and the measured slope timing parameters $t_{sdly(on)}$, $t_{sdur(on)}$, $t_{sdly(off)}$, and $t_{sdur(off)}$ during PWM actuation of the external low-side MOSFET.

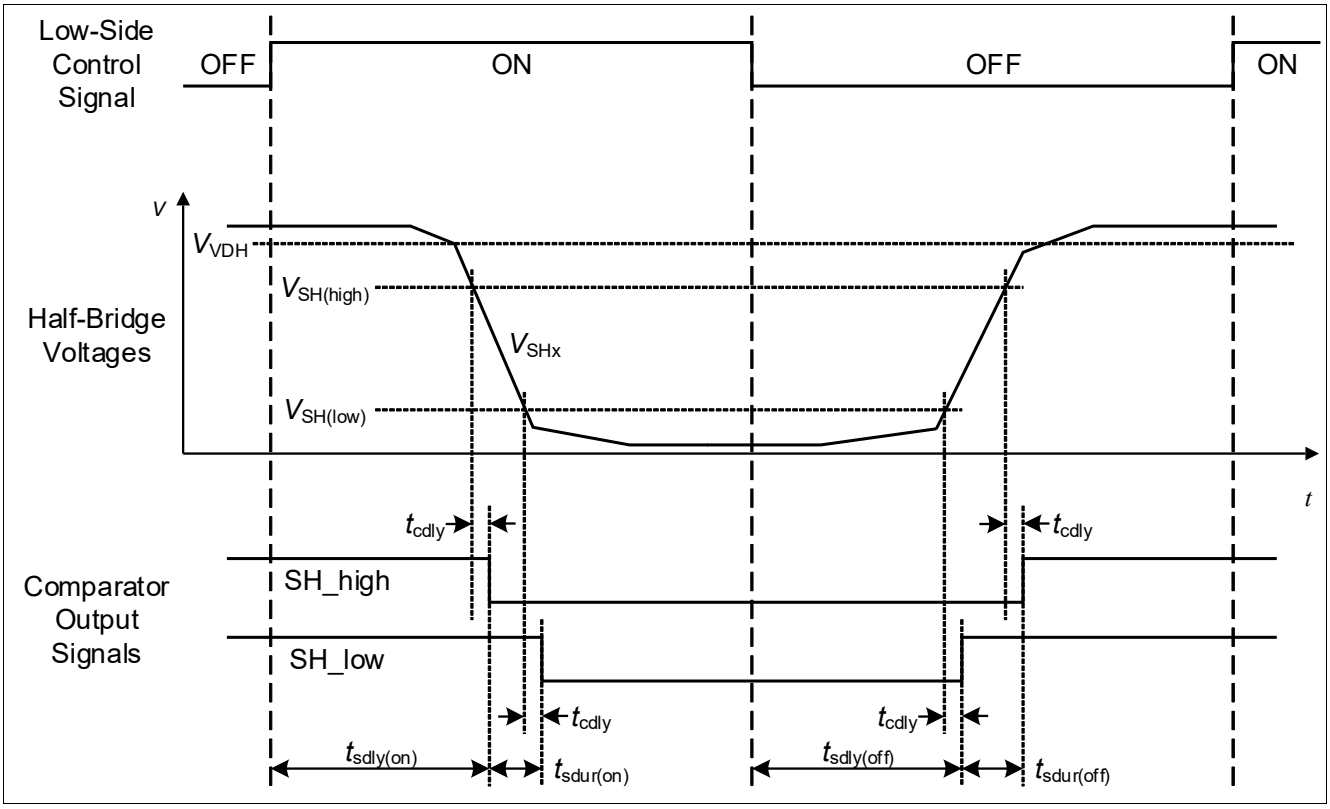

Figure 38 Comparator thresholds and timing parameters during low-side PWM

Figure 39 shows the thresholds $V_{SH(high)}$ and $V_{SH(low)}$ and propagation delay t_{cdly} of the fast comparators and the measured slope timing parameters $t_{sdly(on)}$, $t_{sdur(on)}$, $t_{sdly(off)}$, and $t_{sdur(off)}$ during PWM actuation of the external high-side MOSFET.

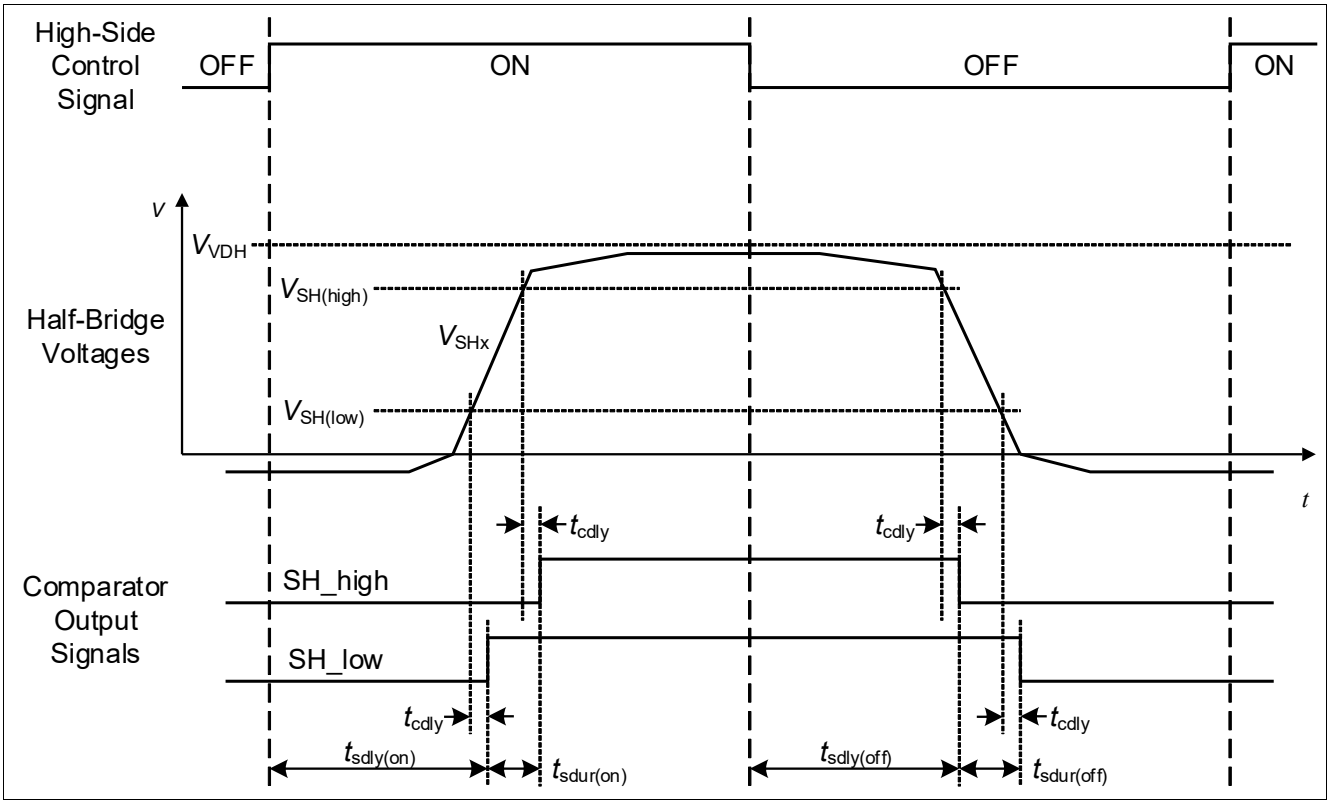

Figure 39 Comparator thresholds and timing parameters during high-side PWM

For plausibility checks of the fast comparators and the assigned timing measurement counters there is an additional channel on/off delay measurement counter which can be switched to each channel's control signals and the corresponding drain-to-source voltage monitoring comparator outputs.

26.2.10 Adaptive Control Mode

The Bridge Driver provides an optional adaptive control mode if the output stages are controlled by the sequencer mode. The target values for on and off delays are defined by SFRs. In order to reach these target values, the adaptive control algorithm reads the results from the timing measurement and adjusts the current set point of the first gate charging sub phase $i_{1(on)}$ and the first gate discharging sub phase $i_{1(off)}$ accordingly.

26.2.11 Integrated 2-Stage Charge Pump

The Bridge Driver is supplied by an integrated 2-stage charge pump which provides a stable voltage V_{CP} above the battery voltage. This enables the Bridge Driver to operate down to low battery voltage values and to statically switch on the external MOSFETs.

The charge pump output voltage is programmable by SFRs. The charge pump frequency is continously varied between two boundary frequencies defined by SFRs.

26.2.12 Adjustable Voltage Monitoring

The supply voltages of the Bridge Driver (VSD and VCP) are monitored by the Measurement Unit. The Bridge Driver including the charge pump can be optionally disabled at undervoltage or overvoltage of the monitored signals.

26.2.13 Adjustable Short Circuit Detection

For short circuit detection the drain-to-source comparators of the Bridge Driver are used to compare the voltage drops across the external MOSFETs to the programmable threshold voltage $V_{DSMONVTH}$. During transitions from off to on and vice versa the comparator output signals are ignored for a programmable blank time defined by SFRs.

In on state the external MOSFETs are switched off automatically if a stable short-circuit condition is detected for a SFR programmable filter time and an interrupt is generated. It can be selected by SFR if all MOSFETs are switched off or only the one where the short-circuit condition was detected.

In off state the motor phases can be pulled up or pulled down by the diagnostic currents I_{PUDiag} and I_{PDDiag}. The drain-to-source comparator output signals can be read by SFRs to check if the motor phase voltages change according to the activated diagnostic currents.

26.2.14 Open-Load Detection

For open-load detection in off state the pull-up diagnostic current I_{PUDiag} of one half bridge and the pull-down diagnostic current I_{PDDiag} of the other half bridge are activated. The pull-down diagnostic current I_{PDDiag} is able to overdrive the pull-up diagnostic current I_{PUDiag} (by I_{PDDiag_OD}). Therefore, in the case of a connected motor, both motor phase voltages are pulled-down. In the case of an disconnected motor, one motor phase voltage is pulled down while the other is pulled up according to the diagnostic current settings. The reaction of the motor phase voltages can be checked by the drain-to-source comparators of the Bridge Driver and their corresponding SFR status bits.

26.2.15 Overtemperature

The temperature of the Bridge Driver Charge Pump is monitored by a dedicated temperature sensor of the Measurement Unit for temperature warning signalling and overtemperature shutdown of the Bridge Driver.

27 Current Sense Amplifier

27.1 Features

Main Features

- Programmable gain settings: G = 10, 20, 40, 60
- Differential input voltage: ± 1.5V / G
- Wide common mode input range ± 2 V
- Low settling time < 1.4 µs

27.2 Introduction

The current sense amplifier in **Figure 40** can be used to measure near ground differential voltages via the 10-bit ADC. Its gain is digitally programmable through internal control registers.

Linear calibration has to be applied to achieve high gain accuracy, e.g. end-of-line calibration including the shunt resistor.

Figure 40 shows how the current sense amplifier can be used as a low-side current sense amplifier where the motor current is converted to a voltage by means of a shunt resistor R_{SH}. A differential amplifier input is used in order to eliminate measurement errors due to voltage drop across the stray resistance R_{Stray} and differences between the external and internal ground. If the voltage at one or both inputs is out of the operating range it has to be taken into account that the input circuit is overloaded and needs a certain specified **recovery time**.

In general, the external low pass filter should provide suppression of EMI.

27.2.1 Block Diagram

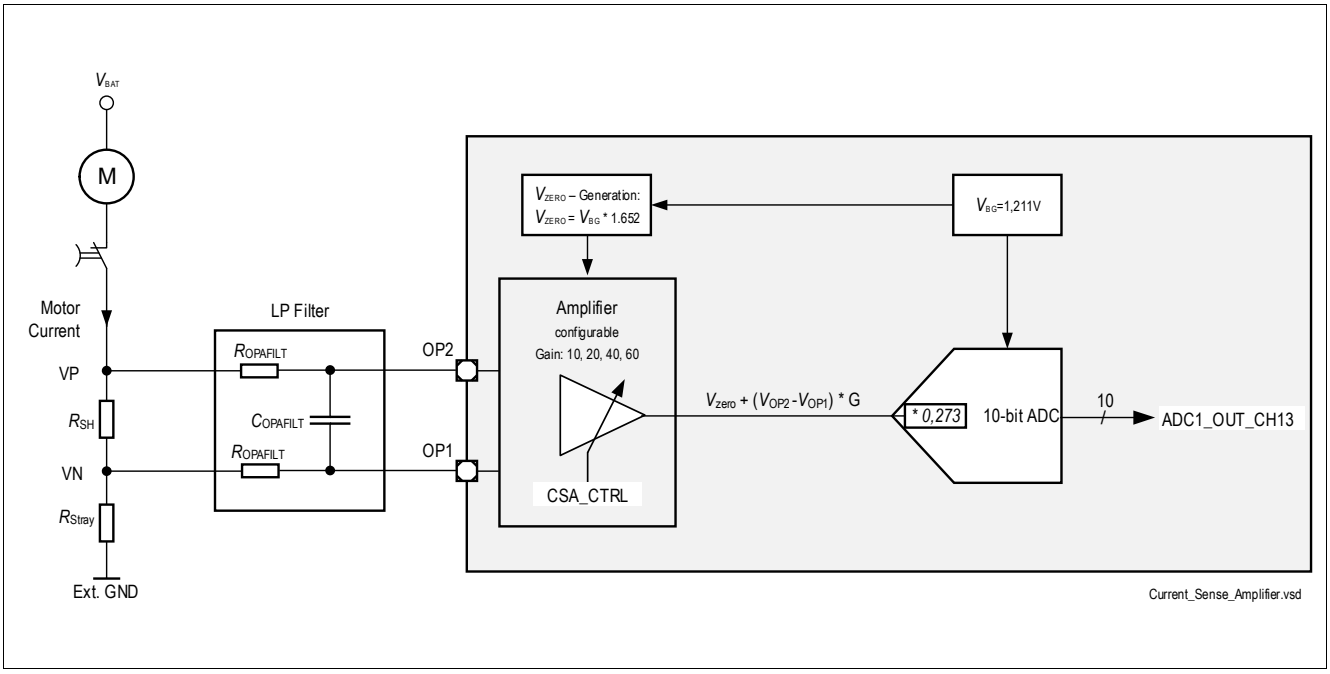

Figure 40 Simplified Application Diagram

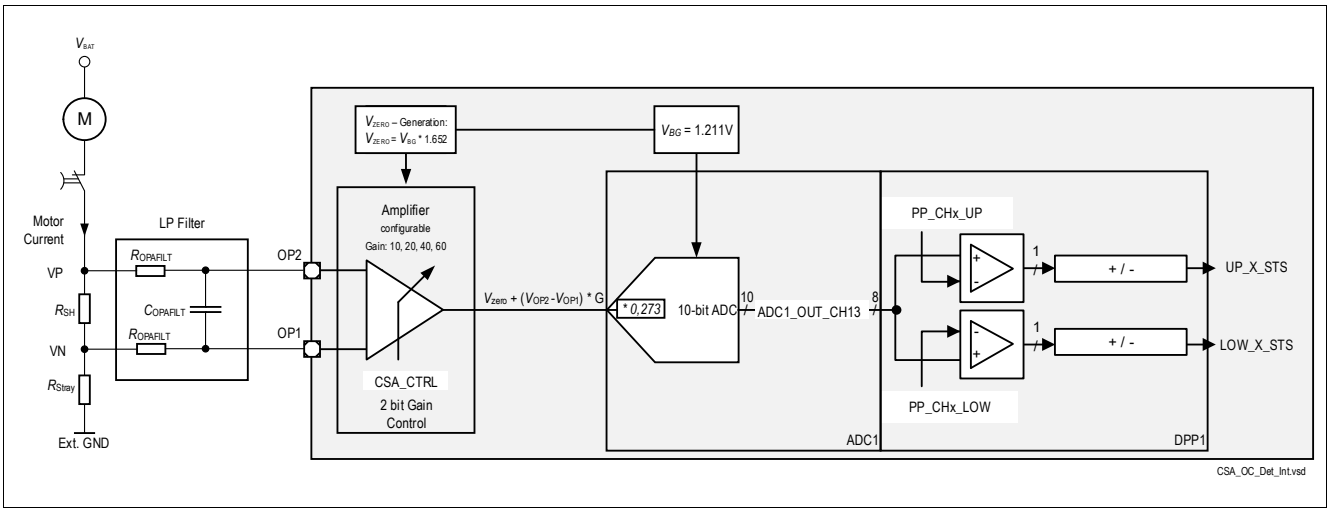

Figure 41 Simplified Application Diagram for Softshort Detection

28 Application Information

Note: The following information is given as a hint for the implementation of the device only and shall not be regarded as a description or warranty of a certain functionality, condition or quality of the device.

28.1 Window-Lift Application Diagram

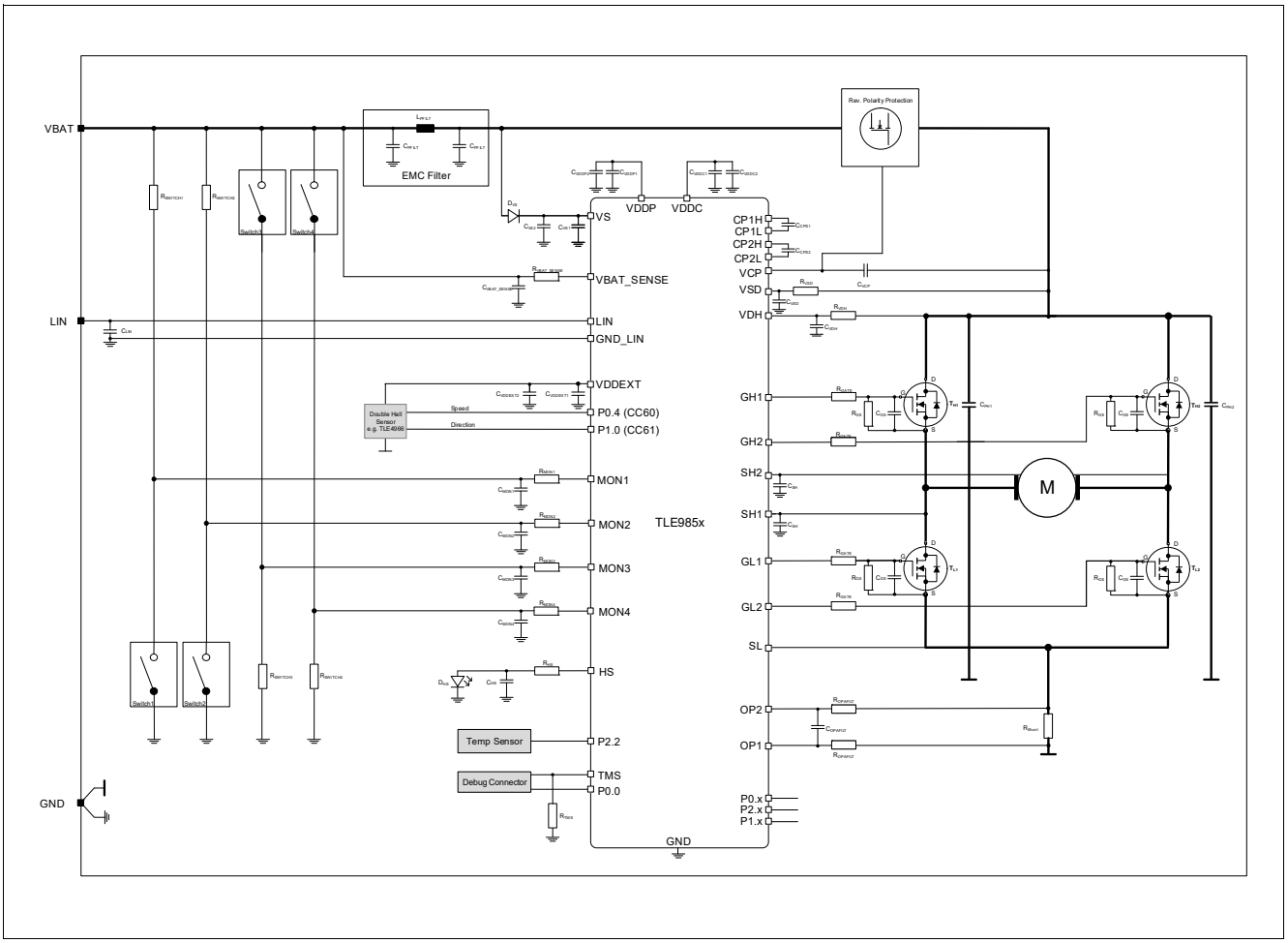

Figure 42 Simplified Application Diagram Example

Note: This is a very simplified example of an application circuit and bill of material. The function must be verified in the actual application.

Table 12 External Component (BOM)

Symbol	Function	Component
C_{VS1}	Capacitor 1 at VS pin	22 µF[1)]
C_{VS2}	Capacitor 2 at VS pin	100 nF[2)3)]
D_{VS}	Reverse-polarity protection diode	

Table 12 External Component (BOM) (cont'd)

Symbol	Function	Component
$C_{VDDEXT1}$	Capacitor 1 at VDDEXT pin	470 nF[3)]
$C_{VDDEXT2}$	Capacitor 2 at VDDEXT pin	470 nF
C_{VDDC1}	Capacitor 1 at VDDC pin	100 nF[3)]
C_{VDDC2}	Capacitor 2 at VDDC pin	330nF
C_{VDDP1}	Capacitor 1 at VDDP pin	470 nF[3)]
C_{VDDP2}	Capacitor 2 at VDDP pin	470 nF
R_{MONx}	Resistor at MONx pin	1 kΩ
C_{MONx}	Capacitor at MONx pin	10 nF
R_{VBAT_SENSE}	Resistor at VBAT_SENSE pin	1 kΩ
C_{VBAT_SENSE}	Capacitor at VBAT_SENSE pin	10 nF
C_{LIN}	Capacitor at LIN pin	220 pF
R_{HS}	Resistor at HS pin	160 Ω[4)]
C_{HS}	Capacitor at HS pin	6.8 nF or 33 nF (dependant on ESD GUN requirements)
D_{HS}	LED	
R_{VSD}	Limitation of reverse currents due to transients (-2V, 8ms)	2 Ω
C_{VSD}	Filter C for charge pump and driver	1 µF
C_{CPS1}	Charge pump flying capacitor 1	220 nF
C_{CPS2}	Charge pump flying capacitor 2	220 nF
C_{VCP}	Charge pump storage capacitor	470 nF
R_{VDH}	Resistor	1 kΩ
C_{VDH}	Capacitor	1 nF
C_{PH1}	DC-link buffer capacitor phase 1	220 µF
C_{PH2}	DC-link buffer capacitor phase 2	220 µF
R_{Shunt}	Shunt resistor	5 mΩ
$R_{OPAFILT}$	Resistor	12 Ω
$C_{OPAFILT}$	Capacitor	100 nF
C_{SH}	Capacitor	1 nF
R_{GATE}	Resistor	optional
R_{GS}	Resistor	100 kΩ
C_{GS}	Capacitor	4.7 nF (depends on MOSFET C_{GS})
L_{PFILT}	PI filter inductor	
C_{PFILT}	PI filter capacitor	10 µF
$R_{SWITCHx}$	Resistor	
R_{TMS}	Resistor	

1) to be dimensioned according to application requirements
2) to reduce the effect of fast voltage transients of Vs, these capacitors should be placed close to the device pin
3) ceramic capacitor

4) calculated for 24V (jump start)

28.2 Connection of unused pins

Table 13 shows recommendations how to connect pins, in case they are not needed by the application.

Table 13 Recommendation for connecting unused pins

type	pin number	recommendation 1 (if unused)	recommendation 2 (if unused)
LIN	48	open	
HS	2	VS	open
MON	17, 18, 19, 20	GND	open + configure internal PU/PD
GPIO	22, 24, 26, 27, 28, 29, 31, 32, 33, 34, 37, 38, 39, 40, 41	GND	external PU/PD or open + configure internal PU/PD
TMS	23	GND	
RESET	25	open	
VDDEXT	45	open	
VBAT_SENSE	47	VS	

28.3 Connection of P0.2 for SWD debug mode

To enter the SWD debug mode, P0.2 needs to be 0 at the rising edge of the reset signal.

P0.2 has an internal pulldown, so it just needs to be ensured that there is no external 1 at P0.2 when the debug mode is entered.

28.4 Connection of TMS

For the debug mode, the TMS pin needs to be 1 at the rising edge of the reset signal. This is controlled by the debugger. The TMS pin has an internal PD.

To avoid the device entering the debug mode unintendedly in the final application, adding an external pull-down additionally is recommended.

28.5 ESD Tests

*Note: Tests for ESD robustness according to IEC61000-4-2 “gun test” (150pF, 330Ω) were performed. The results and test condition will be available in a test report. The target values for the test are listed in **Table 14** below.*

Table 14 ESD "Gun Test"

Performed Test	Result	Unit	Remarks
ESD at pin LIN, versus GND	>6	kV	1)positive pulse
ESD at pin LIN, versus GND	< -6	kV	1)negative pulse
ESD at pin VS, VBAT_SENSE, MONx, HS, versus GND	>6	kV	1)2)positive pulse
ESD at pin VS, VBAT_SENSE, MONx, HS, versus GND	< -6	kV	1)2)negative pulse

1) ESD susceptibility "ESD GUN", tested by external test house (IBEE Zwickau, EMC Test report Nr. 07-01-19), according to "LIN Conformance Test Specification Package for LIN 2.1, October 10th, 2008" and "Hardware Requirements for LIN, CAN and FlexRay Interfaces in Automotive Application - AUDI, BMW, Daimler, Porsche, Volkswagen - Revision 1.3 / 2012"

2) With external circuit as shown in **Figure 42**.

29 Electrical Characteristics

This chapter includes all relevant Electrical Characteristics of the product TLE9853QX.

29.1 General Characteristics

29.1.1 Absolute Maximum Ratings

Table 15 Voltages Supply Pins

T_j = -40°C to +150°C, all voltages with respect to ground, positive current flowing into pin (unless otherwise specified)

Parameter	Symbol	Values			Unit	Note or Test Condition	Number
		Min.	Typ.	Max.			
VS voltage	$V_{S,max}$	-0.3	-	40	V	1) Load dump	P_1.1.1
VSD voltage	$V_{SD,max}$	-0.3	-	48	V	1)	P_1.1.34
VSD voltage	$V_{SD,max_extended}$	-2.8	-	48	V	2) 1) Series resistor; R_{VSD}=2.2Ω; t=8ms	P_1.1.35
VDDP voltage	$V_{DDP,max}$	-0.3	-	5.5	V	1)	P_1.1.2
VDDEXT voltage	$V_{DDEXT,max}$	-0.3	-	V_S + 0.3	V	1)	P_1.1.3
VDDC voltage	$V_{DDC,max}$	-0.3	-	1.6	V	1)	P_1.1.4

1) Not subject to production test, specified by design

2) Conditions and min. value is derived from application condition for reverse-polarity event.

Table 16 Voltages High Voltage Pins

T_j = -40°C to +150°C, all voltages with respect to ground, positive current flowing into pin (unless otherwise specified)

Parameter	Symbol	Values			Unit	Note or Test Condition	Number
		Min.	Typ.	Max.			
Voltage at VBAT_SENSE pin	$V_{BAT_SENSE,max}$	-28	-	40	V	1) 2)	P_1.1.5
Voltage at HS pin	$V_{HS,max}$	-0.3	-	V_S+0.3	V	2)	P_1.1.6
Voltage at LIN pin	$V_{LIN,max}$	-28	-	40	V	2)	P_1.1.7
Voltage at MONx pins	$V_{MON,max}$	-28	-	40	V	1) 2)	P_1.1.8
Voltage at VDH pin	$V_{VDH,max}$	-2.8	-	48	V	3) 2)	P_1.1.36
Voltage at GHx pins	V_{GH}	-8	-	48	V	4) 2)	P_1.1.37
Voltage at GHx vs. SHx pins	V_{GHvsSH}	-	-	14	V	2)	P_1.1.38
Voltage at SHx pins	V_{SH}	-8	-	48	V	2)	P_1.1.39
Voltage at GLx pins	V_{GL}	-8	-	48	V	5) 2)	P_1.1.40

Table 16 Voltages High Voltage Pins (cont'd)

T_j = -40°C to +150°C, all voltages with respect to ground, positive current flowing into pin (unless otherwise specified)

Parameter	Symbol	Values			Unit	Note or Test Condition	Number
		Min.	Typ.	Max.			
Voltage at GLx vs. SL pins	V_{GLvsSL}	-	-	14	V	2)	P_1.1.41
Voltage at SL pin	V_{SL}	-8	-	48	V	2)	P_1.1.49
Voltage at charge pump pins CP1H, CP1L, CP2H, CP2L, VCP	V_{CPx}	-0.3	-	48	V	6) 2)	P_1.1.42

1) For -28V, external 1 kΩ resistor is required to limit output current.
2) Not subject to production test, specified by design
3) For -2.8V, external 1 kΩ resistor is required to limit output current.
4) To achieve max. ratings on this pin, Parameter P_1.1.38 has to be taken into account resulting in the following dependency: $V_{GH} < V_{SH} + V_{GHvsSH_max}$ and additionally $V_{SH} < V_{GH} + 0.3$ V
5) To achieve max. ratings on this pin, Parameter P_1.1.41 has to be taken into account resulting in the following dependency: $V_{GL} < V_{SL} + V_{GLvsSL_max}$ and additionally $V_{SL} < V_{GL} + 0.3$ V
6) These limits can be kept if max current drawn out of pin does not exceed limit of 200 µA

Table 17 Voltages GPIOs

T_j = -40°C to +150°C, all voltages with respect to ground, positive current flowing into pin (unless otherwise specified)

Parameter	Symbol	Values			Unit	Note or Test Condition	Number
		Min.	Typ.	Max.			
Voltage on port pin P0.x, P1.x, P2.x, TMS and RESET	$V_{IO,max}$	-0.3	-	V_{DDP} + 0.3	V	1) in consideration of $V_{IO,max} < V_{DDP@MAX}$	P_1.1.10

1) Not subject to production test, specified by design

Table 18 Voltages at Current Sense Amplifier Inputs

T_j = -40°C to +150°C, all voltages with respect to ground, positive current flowing into pin (unless otherwise specified)

Parameter	Symbol	Values			Unit	Note or Test Condition	Number
		Min.	Typ.	Max.			
Input voltage OP1, OP2	V_{OAI}	-7	-	7	V	1)	P_1.1.43

1) Not subject to production test, specified by design

Table 19 Currents

T_j = -40°C to +150°C, all voltages with respect to ground, positive current flowing into pin (unless otherwise specified)

Parameter	Symbol	Values			Unit	Note or Test Condition	Number
		Min.	Typ.	Max.			
Injection current in Sleep Mode on P0.x, P1.x, P2.x, TMS and RESET	I_{xx}	-	-	5	mA	1) maximum allowed injection current on single pin or sum of pins in Sleep Mode and unpowered device	P_1.1.11
Injection current on HS	I_{HS}	-	-	150	mA	1) current flowing into HS pin (back supply in case of short to battery)	P_1.1.12
Max. current at VCP pin	I_{VCP}	-15	-	-	mA	1)	P_1.1.44

1) Not subject to production test, specified by design

Table 20 Temperatures

T_j = -40°C to +150°C, all voltages with respect to ground, positive current flowing into pin (unless otherwise specified)

Parameter	Symbol	Values			Unit	Note or Test Condition	Number
		Min.	Typ.	Max.			
Junction Temperature	T_j	-40	-	150	°C	1)	P_1.1.14
Storage Temperature	T_{stg}	-55	-	150	°C	1)	P_1.1.15

1) Not subject to production test, specified by design

Table 21 ESD Susceptibility

T_j = -40°C to +150°C, all voltages with respect to ground, positive current flowing into pin (unless otherwise specified)

Parameter	Symbol	Values			Unit	Note or Test Condition	Number
		Min.	Typ.	Max.			
ESD Susceptibility **HBM** all pins	V_{ESD1}	-2	-	2	kV	1) 2) JEDEC HBM	P_1.1.16
ESD Susceptibility **HBM** pins LIN vs. LINGND	V_{ESD3}	-6	-	6	kV	1) 2) JEDEC HBM	P_1.1.17

Table 21 ESD Susceptibility (cont'd)

T_j = -40°C to +150°C, all voltages with respect to ground, positive current flowing into pin (unless otherwise specified)

Parameter	Symbol	Values			Unit	Note or Test Condition	Number
		Min.	Typ.	Max.			
ESD Susceptibility **CDM**	V_{ESD_CDM}	-500	-	500	V	[2] Charged device model, acc. JEDEC JESD22-C101	P_1.1.18
ESD Susceptibility **CDM** corner pins: 1, 12, 13, 24, 25, 36, 37, 48	$V_{ESD_CDM_Corner}$	-750	-	750	V	[2] Charged device model, acc. JEDEC JESD22-C101	P_1.1.48

1) ESD susceptibility, "JEDEC HBM" according to ANSI/ESDA/JEDEC JS001 (1.5 kΩ, 100 pF).

2) Not subject to production test, specified by design

Notes

1. *Stresses above the ones listed here may cause permanent damage to the device. Exposure to absolute maximum rating conditions for extended periods may affect device reliability.*
2. *Integrated protection functions are designed to prevent IC destruction under fault conditions described in the data sheet. Fault conditions are considered as "outside" normal operating range. Protection functions are not designed for continuous repetitive operation.*

29.1.2 Functional Range

Note: Within the functional range the IC operates as described in the circuit description. The electrical characteristics are specified within the conditions given in the related electrical characteristics table.

Table 22 Functional Range

T_j = -40°C to +150°C, all voltages with respect to ground, positive current flowing into pin (unless otherwise specified)

Parameter	Symbol	Values			Unit	Note or Test Condition	Number
		Min.	Typ.	Max.			
Supply voltage in Active Mode	V_{S_AM}	5.5	-	28	V		P_1.2.1
Extended Supply voltage in Active Mode-range 1	$V_{S_AM_extend_1}$	28	-	40	V	[1] Functional with parameter deviation	P_1.2.24
Extended Supply voltage in Active Mode	$V_{S_AM_extend_2}$	3.0	-	28	V	[2] Functional with parameter deviation	P_1.2.2
Supply voltage in Active Mode for MOSFET Driver Supply	V_{SD_AM}	5.4	-	29	V		P_1.2.12

Table 22 Functional Range (cont'd)

T_j = -40°C to +150°C, all voltages with respect to ground, positive current flowing into pin (unless otherwise specified)

Parameter	Symbol	Values			Unit	Note or Test Condition	Number
		Min.	Typ.	Max.			
Extended maxiumum supply voltage in Active Mode for MOSFET Driver Supply	$V_{SD_AM_max_extended}$	29	-	32	V	[1] Functional with parameter deviation	P_1.2.13
Supply voltage for LIN Transceiver	$V_{S_AM_LIN}$	5.5	-	18	V	Parameter Specification	P_1.2.3
Extended Supply voltage for LIN Transceiver and Monitoring Inputs (MONx) for all device modes	$V_{S_AM_LIN_extend}$	4.0	-	28	V	Functional with parameter deviation	P_1.2.4
Supply voltage in Stop Mode	$V_{S_Stopmin}$	3.0	-	-	V		P_1.2.5
Min. Supply voltage in Sleep Mode	$V_{S_Sleepmin}$	3.0	-	-	V		P_1.2.6
Supply Voltage transients slew rate	dV_S/dt	-5	-	5	V/µs	[3]	P_1.2.7
Output current on any GPIO	I_{OH}, I_{OL}	-5	-	5	mA	[3]	P_1.2.8
Output sum current for all GPIO pins	$I_{GPIO,sum}$	-50	-	50	mA	[3]	P_1.2.9
Junction Temperature	T_j	-40	-	150	°C		P_1.2.11

1) This operation voltage range is only allowed for a short duration: t_{max} < 400 ms
2) Hall-Supply, ADC, SPI, UART, NVM, RAM, CPU fully functional and in spec down to V_s = 3 V. Actuators (High-Side Switch, MOSFET Driver) in V_s range from 3 V < V_s < 5.5 V (High-Side Switch) or 3 V < V_s < 4.4 V (MOSFET Driver) functional but some parameters can be out of spec
3) Not subject to production test, specified by design

29.1.3 Current Consumption

Table 23 Current Consumption

V_S = 5.5 V to 28 V, T_j = -40°C to +150°C; all voltages with respect to ground, positive current flowing into pin (unless otherwise specified)

Parameter	Symbol	Values			Unit	Note or Test Condition	Number
		Min.	Typ.	Max.			
Current Consumption in Active Mode at pin VS	I_{Vs_40M}	-	-	30	mA	all digital modules enabled and functional, ADCs converting in sequencer mode, no loads on GPIOs, VDDEXT off, LIN in recessive state (no communication), HSx enabled but off, Charge Pump on, MOSFET Driver enabled and on (PWM running at 25kHz with a capacitive load of C_{Load}= 10 nF), CSA enabled.; 3V≤V_S≤28V; f_{sys}=40MHz	P_1.3.18
Current consumption in Active Mode at pin VSD	I_{VSD}	-	-	50	mA	Charge Pump on, MOSFET Driver enabled and on (PWM running at 25kHz with a capacitive load of C_{Load}= 10 nF).	P_1.3.8
Current consumption in Active Mode at pin VSD - Brake Mode	I_{VSD_BK}	-	-	25	mA	Charge Pump on and in single-stage mode, MOSFET Driver enabled and 2 Low-Side Drivers on, but not switching; I_{CHARGE}=15_D	P_1.3.33

Table 23 Current Consumption (cont'd)

V_S = 5.5 V to 28 V, T_j = -40°C to +150°C; all voltages with respect to ground, positive current flowing into pin (unless otherwise specified)

Parameter	Symbol	Values			Unit	Note or Test Condition	Number
		Min.	Typ.	Max.			
Current consumption in Sleep Mode at pin VSD -Hold Mode	I_{VSD_SMHM}	-	-	16	µA	Device in Sleep mode, but Low Side Gates are charged statically to keep low side MOSFETs on. Current does not include static Gate to Source current caused by external Gate to Source resistor.; -40°C≤T_j≤85°C	P_1.3.34
Current consumption in Sleep Mode at pin VSD -Hold Mode (extended Temperature Range)	$I_{VSD_SMHM(T_extend)}$	-	-	19	µA	Device in Sleep mode, but Low Side Gates are charged statically to keep low side MOSFETs on. Current does not include static Gate to Source current caused by external Gate to Source resistor.; 85°C<T_j≤150°C	P_1.3.35
Current consumption in Stop Mode at pin VSD - Hold Mode	I_{VSD_STPMHM}	-	-	16	µA	Device in Stop mode, but Low Side Gates are charged statically to keep low side MOSFETs on. Current does not include static Gate to Source current caused by external Gate to Source resistor.; -40°C≤T_j≤85°C	P_1.3.37

Table 23 Current Consumption (cont'd)

V_S = 5.5 V to 28 V, T_j = -40°C to +150°C; all voltages with respect to ground, positive current flowing into pin (unless otherwise specified)

Parameter	Symbol	Values			Unit	Note or Test Condition	Number
		Min.	Typ.	Max.			
Current consumption in Stop Mode at pin VSD - Hold Mode (extended Temperature Range)	$I_{VSD_STPMHM(T_extend)}$	-	-	19	µA	Device in Stop mode, but Low Side Gates are charged statically to keep low side MOSFETs on. Current does not include static Gate to Source current caused by external Gate to Source resistor.; 85°C<T_j≤150°C	P_1.3.38
Current consumption in Sleep Mode at pin VS	I_{Sleep}	-	-	25	µA	System in Sleep Mode, microcontroller not powered, Wake capable via LIN and MON; GPIOs open (no loads) or connected to GND; -40°C≤T_j≤25°C	P_1.3.2
Current consumption in Sleep Mode at pin VS (extended Temperature Range)	$I_{Sleep(T_extend)}$	-	-	35	µA	[1)] System in Sleep Mode, microcontroller not powered, Wake capable via LIN and MON; GPIOs open (no loads) or connected to GND; 25°C<T_j≤85°C; 3V≤V_s≤18V	P_1.3.3
Current consumption in Sleep Mode at pin VS (extended Voltage and Temperature Range)	$I_{Sleep(V_T_extend)}$	-	-	40	µA	[1)] System in Sleep Mode, microcontroller not powered, Wake capable via LIN and MON; GPIOs open (no loads) or connected to GND; 25°C<T_j≤85°C; 3V≤V_s≤28V	P_1.3.4
Current consumption in Sleep Mode at pin VS with cyclic wake	I_{Cyclic}	-	-	30	µA	during sleep period; -40°C≤T_j≤25°C; 3V≤V_s≤28V	P_1.3.5

Table 23 Current Consumption (cont'd)

V_S = 5.5 V to 28 V, T_j = -40°C to +150°C; all voltages with respect to ground, positive current flowing into pin (unless otherwise specified)

Parameter	Symbol	Values			Unit	Note or Test Condition	Number
		Min.	Typ.	Max.			
Current consumption in Sleep Mode at pin VS with cyclic wake (extended Temperature Range)	$I_{Cyclic(T_extend)}$	-	-	40	µA	[1] during sleep period; 25°C<T_j≤85°C; 3V≤V_s≤28V	P_1.3.6
Current consumption in Stop Mode at pin VS	I_{Stop}	-	-	60	µA	System in Stop Mode, microcontroller not clocked, Wake capable via LIN and MON; GPIOs open (no loads) or connected to GND; -40°C≤T_j≤25°C; 5.5V≤V_s≤18V	P_1.3.22
Current consumption in Stop Mode at pin VS (extended Temperature Range)	$I_{Stop(T_extend)}$	-	90	110	µA	[1] System in Stop Mode, microcontroller not clocked, Wake capable via LIN and MON; GPIOs open (no loads) or connected to GND; 25°C<T_j≤85°C	P_1.3.19
Current consumption in Stop Mode at pin VS	$I_{Stop_V_extend}$	-	-	4.0	mA	System in Stop Mode, microcontroller not clocked, Wake capable via LIN and MON; GPIOs open (no loads) or connected to GND; -40°C≤T_j≤85°C; 3V≤V_s<5.5V	P_1.3.21
Current consumption in Stop Mode at pin VS with cyclic sense	I_{Stop_CS}	-	95	115	µA	[1] System in Stop Mode (during stop period), microcontroller not clocked, Wake capable via LIN and MON; VDDEXT off; High Side off; GPIOs open (no loads) or connected to GND or VDDP; -40°C≤T_j≤85°C; 5.5V≤V_s≤18V	P_1.3.20

1) Not subject to production test, specified by design

29.1.4 Thermal Resistance

Table 24 Thermal Resistance

Parameter	Symbol	Values			Unit	Note or Test Condition	Number
		Min.	Typ.	Max.			
Junction to Case	$R_{th(JC)}$	-	6	-	K/W	1) measured to Exposed Pad	P_1.4.1
Junction to Ambient	$R_{th(JA)}$	-	33	-	K/W	2)	P_1.4.2

1) Not subject to production test, specified by design
2) According to Jedec JESD51-2,-5,-7 at natural convection on FR4 2s2p board . Board: 76.2x114.3x1.5mm^3 with 2 inner copper layers (35µm thick), with thermal via array under the exposed pad contacting the first inner copper layer and 300mm^2 cooling area on the bottom layer (70µm).

29.1.5 Timing Characteristics

The transition times between the system modes are specified here. Generally the timings are defined from the time when the corresponding bits in register PMCON0 are set until the sequence is terminated.

Table 25 System Timing

V_S = 5.5 V to 28 V, T_j = -40°C to +150°C, all voltages with respect to ground, positive current flowing into pin (unless otherwise specified)

Parameter	Symbol	Values			Unit	Note or Test Condition	Number
		Min.	Typ.	Max.			
Wake-up over battery	t_{start}	-	-	2.5	ms	1) Battery ramp-up till MCU software is running.	P_1.5.1
Sleep-Exit	$t_{sleep - exit}$	-	-	2.5	ms	1) rising/falling edge of any wake-up signal (LIN, MON) till MCU software running.	P_1.5.2
Sleep-Entry	$t_{sleep - entry}$	-	-	330	µs	2) 1)	P_1.5.3

1) Not subject to production test, specified by design
2) Wake events during Sleep-Entry are stored and lead to wake-up after Sleep Mode is reached.

29.2 Power Management Unit (PMU)

This chapter includes all electrical characteristics of the Power Management Unit.

29.2.1 PMU Input Voltage VS

Table 26 Electrical Characteristics

V_S = 5.5 V to 28 V, T_j = -40°C to +150°C, all voltages with respect to ground, positive current flowing into pin (unless otherwise specified)

Parameter	Symbol	Values			Unit	Note or Test Condition	Number
		Min.	Typ.	Max.			
Required decoupling capacitance	C_{VS1}	0.1	-	-	µF	ESR<1Ω	P_2.1.12
Required buffer capacitance for stability (load jumps)	C_{VS2}	10	-	-	µF	1)	P_2.1.13

1) Not subject to production test, specified by design

29.2.2 PMU I/O Supply Parameters VDDP

Table 27 Electrical Characteristics

V_S = 5.5 V to 28 V, T_j = -40°C to +150°C, all voltages with respect to ground, positive current flowing into pin (unless otherwise specified)

Parameter	Symbol	Values			Unit	Note or Test Condition	Number
		Min.	Typ.	Max.			
Specified Output Current	I_{VDDP}	0	-	50	mA	1)	P_2.1.1
Required decoupling capacitance	C_{VDDP1}	0.47	-	-	µF	2) 3) ESR<1Ω	P_2.1.2
Total required buffer capacitance for stability (load jumps, line steps)	C_{VDDP2}	0.47	-	2.2	µF	3) 4)	P_2.1.3
Output Voltage including line and load regulation @ Active Mode	V_{DDPOUT}	4.9	5.0	5.1	V	5) I_{load}<90mA; V_s≥5.5V	P_2.1.4
Output Voltage including line and load regulation @ Stop Mode	$V_{DDPOUTSTOP}$	4.5	5.0	5.25	V	5) I_{load}=$I_{load_internal}$+$I_{load_external}$; $I_{load_external}$=5mA; $I_{load_internal}$=2mA; V_s≥5.5V	P_2.1.5
Output Drop	$V_{sV\ DDPout}$	-	50	+400	mV	6) I_{VDDP}=50mA; V_s=3V	P_2.1.6

Table 27 Electrical Characteristics (cont'd)

V_S = 5.5 V to 28 V, T_j = -40°C to +150°C, all voltages with respect to ground, positive current flowing into pin (unless otherwise specified)

Parameter	Symbol	Values			Unit	Note or Test Condition	Number
		Min.	Typ.	Max.			
Load Regulation	$V_{VDDPLOR}$	-50	-	50	mV	2mA≤I_{load}≤90mA; T_j≤150°C; C=C_{VDDP1}+C_{VDDP2}	P_2.1.7
Line Regulation	$V_{VDDPLIR}$	-50	-	50	mV	5.5V≤V_s≤28V	P_2.1.8
Overvoltage detection	V_{DDPOV}	5.14	-	5.4	V	Overvoltage leads to SUPPLY_NMI; V_s≥5.5V	P_2.1.9
Under Voltage Reset	V_{DDPUV}	2.55	2.7	2.8	V		P_2.1.10
Voltage stable detection range [7]	ΔV_{DDPSTB}	-220	-	+220	mV	[4]	P_2.1.15
Over Current Diagnostic	I_{VDDPOC}	90	-	220	mA	current including VDDC current consumption	P_2.1.11
Short-Circuit Diagnostic	I_{VDDPSC}	270	-	600	mA	[4]	P_2.1.31
Pull Down Strength in Sleep Mode	$I_{VDDPPDSLP}$	5.1	-	8.9	mA	V_{DDP}=5V	P_2.1.29

1) Specified output current for port supply and additional other external loads connected to VDDP, excluding on-chip current consumption.
2) only min. value is tested
3) The total capacitance on pin VDDP is specified by C_{VDDP2} including C_{VDDP1}.
4) Not subject to production test, specified by design
5) Load current includes internal supply.
6) Output drop for I_{VDDP} plus internal supply
7) The absolute voltage value is the sum of parameters $V_{VDDP} = V_{VDDP} + \Delta V_{VDDPSTB}$

Table 28 Timing Parameters

V_S = 5.5 V to 28 V, T_j = -40°C to +150°C, all voltages with respect to ground, positive current flowing into pin (unless otherwise specified)

Parameter	Symbol	Values			Unit	Note or Test Condition	Number
		Min.	Typ.	Max.			
Overvoltage detection filter time	t_{FILT_VDDPOV}	465	665	865	µs	[1] [2]	P_2.1.16
Overcurrent diagnostic filter time	t_{FILT_VDDPOC}	21	30	39	µs	[1] [2]	P_2.1.17
Overcurrent diagnostic shutdown time	$t_{FILT_VDDPOC_SD}$	615	920	1250	µs	[1] [2]	P_2.1.18

Table 28 Timing Parameters (cont'd)

V_S = 5.5 V to 28 V, T_j = -40°C to +150°C, all voltages with respect to ground, positive current flowing into pin (unless otherwise specified)

Parameter	Symbol	Values			Unit	Note or Test Condition	Number
		Min.	Typ.	Max.			
Short-circuit diagnostic filter time	t_{FILT_VDDPSC}	5	10	13	µs	1) 2)	P_2.1.34
Short-circuit diagnostic shutdown time	$t_{FILT_VDDPSC_SD}$	50	75	105	µs	1) 2)	P_2.1.35

1) This filter time and its variation is derived from the time base $t_{LP_CK} = 1 / f_{LP_CLK}$

2) Not subject to production test, specified by design

29.2.3 PMU Core Supply Parameters VDDC

Table 29 Electrical Characteristics

V_S = 5.5 V to 28 V, T_j = -40°C to +150°C, all voltages with respect to ground, positive current flowing into pin (unless otherwise specified)

Parameter	Symbol	Values			Unit	Note or Test Condition	Number
		Min.	Typ.	Max.			
Required decoupling capacitance	C_{VDDC1}	0.1	-	1	µF	1) ESR<1Ω	P_2.2.1
Required buffer capacitance for stability (load jumps)	C_{VDDC2}	0.33	-	1	µF	2)	P_2.2.2
Output Voltage including line regulation @ Active Mode	V_{DDCOUT}	1.44	1.5	1.56	V	I_{load}<40mA	P_2.2.3
Output Voltage including line regulation @ Stop Mode	V_{DDCOUT_Stop1}	1.44	1.5	1.56	V	with setting of VDDC output voltage to 1.5V in Stop Mode; $I_{load_internal}$<2mA	P_2.2.26
Output Voltage including line regulation @ Stop Mode - Reduced Core Supply Voltage	V_{DDCOUT_Stop2}	0.8	-	1.3	V	with setting of VDDC output voltage to 0.9V in Stop Mode; $I_{load_internal}$<2mA	P_2.2.25
Load Regulation	V_{DDCLOR}	-50	-	50	mV	2mA≤I_{load}≤40mA; C=C_{VDDC1}+C_{VDDC2}	P_2.2.4
Line Regulation	V_{DDCLIR}	-25	-	25	mV	5.5V≤V_s≤28V	P_2.2.5

Table 29 Electrical Characteristics (cont'd)

V_S = 5.5 V to 28 V, T_j = -40°C to +150°C, all voltages with respect to ground, positive current flowing into pin (unless otherwise specified)

Parameter	Symbol	Values			Unit	Note or Test Condition	Number
		Min.	Typ.	Max.			
Over Voltage Detection	V_{DDCOV}	1.58	-	-	V	Overvoltage leads to SUPPLY_NMI	P_2.2.6
Under Voltage Reset	V_{DDVUV}	1.10	-	1.19	V		P_2.2.7
Over Current Diagnostic	I_{VDDCOC}	40	-	80	mA		P_2.2.8
Short-Circuit Diagnostic	I_{VDDCSC}	120	-	240	mA	2)	P_2.2.28
Pulldown Strength in Sleep Mode	$I_{VDDCPDSLP}$	0.75	1.5	2.7	mA	V_{DDC}=1.5V	P_2.2.27

1) only min. value is tested

2) Not subject to production test, specified by design

Table 30 Timing Parameters

V_S = 5.5 V to 28 V, T_j = -40°C to +150°C, all voltages with respect to ground, positive current flowing into pin (unless otherwise specified)

Parameter	Symbol	Values			Unit	Note or Test Condition	Number
		Min.	Typ.	Max.			
Overvoltage detection filter time	t_{FILT_VDDCOV}	465	665	865	µs	1) 2)	P_2.2.11
Overcurrent diagnostic filter time	t_{FILT_VDDCOC}	21	30	39	µs	1) 2)	P_2.2.12
Overcurrent diagnostic shutdown time	$t_{FILT_VDDCOC_SD}$	615	920	1250	µs	1) 2)	P_2.2.13
Short-circuit diagnostic filter time	t_{FILT_VDDCSC}	5	10	13	µs	1) 2)	P_2.2.29
Short-circuit diagnostic shutdown time	$t_{FILT_VDDCSC_SD}$	50	75	105	µs	1) 2)	P_2.2.30

1) This filter time and its variation is derived from the time base $t_{LP_CLK} = 1 / f_{LP_CLK}$.

2) Not subject to production test, specified by design

29.2.4 VDDEXT Voltage Regulator 5.0V

Table 31 VDDEXT Regulator Active Mode

V_S = 5.5 V to 28 V, T_j = -40°C to +150°C, all voltages with respect to ground, positive current flowing into pin (unless otherwise specified)

Parameter	Symbol	Values			Unit	Note or Test Condition	Number
		Min.	Typ.	Max.			
Specified Output Current	I_{VDDEXT}	0	-	40	mA		P_2.3.1
Required decoupling capacitance	$C_{VDDEXT1}$	330	-	1000	nF	ESR<1Ω	P_2.3.2
Required buffer capacitance for stability (load jumps)	$C_{VDDEXT2}$	100	-	1000	nF	[1]	P_2.3.3
Output voltage including line and load regulation - Load 1	V_{DDEXT_LD1}	4.9	5.0	5.1	V	I_{load}≤20mA; V_s≥5.5V	P_2.3.4
Output voltage including line and load regulation - Load 2	V_{DDEXT_LD2}	4.9	5.0	5.1	V	I_{load}≤40mA; -40°C≤T_j≤150°C; V_s≥5.5V	P_2.3.45
Output Drop - Load 1	$V_{s\text{-}VDDEXT_L1}$	-	50	+300	mV	[2] 0mA≤I_{load}≤20mA; 3V≤V_s≤5V; C=$C_{VDDEXT1}$+$C_{VDDEXT2}$	P_2.3.5
Output Drop - Load 2	$V_{s\text{-}VDDEXT_L2}$	-	-	+600	mV	20mA<I_{load}≤40mA; 3V≤V_s≤5V; C=$C_{VDDEXT1}$+$C_{VDDEXT2}$	P_2.3.17
Load Regulation	$V_{DDEXTLOR}$	-100	-	10	mV	[2] 0mA≤I_{load}≤40mA; V_s≥5.5V; C=$C_{VDDEXT1}$+$C_{VDDEXT2}$	P_2.3.6
Line Regulation - Load 1	$V_{VDDEXTLIR}$	-50	-	50	mV	[2] 0mA≤I_{load}≤20mA; 5.5V≤V_s≤28V	P_2.3.7
Line Regulation - Load 2	$V_{VDDEXTLIR}$	-60	-	60	mV	20mA<I_{load}≤40mA; 5.5V≤V_s≤28V	P_2.3.50
Power Supply Rejection Ratio	$PSRR_{VDDEXT1}$	50	-	-	dB	[1] 0mA≤I_{load}≤20mA; V_r=2Vpp ; V_s=13.5V; 0kHz<f≤1kHz	P_2.3.8
Under Voltage Shutdown	$V_{VDDEXTUV}$	1.55	1.9	2.1	V	[3]	P_2.3.9

Table 31 VDDEXT Regulator Active Mode (cont'd)

V_S = 5.5 V to 28 V, T_j = -40°C to +150°C, all voltages with respect to ground, positive current flowing into pin (unless otherwise specified)

Parameter	Symbol	Values			Unit	Note or Test Condition	Number
		Min.	Typ.	Max.			
Over Current Limitation	$I_{VDDEXTOC}$	100	250	380	mA	1)	P_2.3.10
VDDEXT output discharge resistance	R_{VDDEXT_DISCHG}	16	20	24	kOhm		P_2.3.11

1) Not subject to production test, specified by design
2) Tested with 10 uA.
3) When condition is met, the bit VDDEXT_CTRL.VDDEXT_UV_IS will be set.

Table 32 Thermal Shutdown (Junction Temperature)

V_S = 5.5 V to 28 V, T_j = -40°C to +150°C, all voltages with respect to ground, positive current flowing into pin (unless otherwise specified)

Parameter	Symbol	Values			Unit	Note or Test Condition	Number
		Min.	Typ.	Max.			
Thermal shutdown temp.	T_{jSD}	180	200	215	°C	1)	P_2.3.48
Thermal shutdown hyst.	ΔT	5	10	15	K	1)	P_2.3.49

1) Not subject to production test, specified by design

Table 33 VDDEXT Regulator Low Current Mode

V_S = 5.5 V to 28 V, T_j = -40°C to +150°C, all voltages with respect to ground, positive current flowing into pin (unless otherwise specified)

Parameter	Symbol	Values			Unit	Note or Test Condition	Number
		Min.	Typ.	Max.			
Specified Output Current	I_{VDDEXT_LCM}	0	-	5	mA		P_2.3.28
Output Voltage including line and load regulation	V_{DDEXT_LCM}	4.6	5.0	5.1	V	I_{load}≤5mA; V_s≥5.5V	P_2.3.29
Output Drop	$V_{s\text{-}VDDEXT_LCM}$	-	50	+300	mV	I_{load}≤5mA; 3V≤V_s≤5V; C=$C_{VDDEXT1}$+$C_{VDDEXT2}$	P_2.3.30
Load Regulation	$V_{DDEXTLOR_LCM}$	-250	-	250	mV	1) 0mA≤I_{load}≤5mA; V_s≥5.5V; C=$C_{VDDEXT1}$+$C_{VDDEXT2}$	P_2.3.31

Table 33 VDDEXT Regulator Low Current Mode (cont'd)

V_S = 5.5 V to 28 V, T_j = -40°C to +150°C, all voltages with respect to ground, positive current flowing into pin (unless otherwise specified)

Parameter	Symbol	Values			Unit	Note or Test Condition	Number
		Min.	Typ.	Max.			
Line Regulation	$V_{VDDEXTLIR_LCM}$	-300	-	300	mV	[1] 0mA≤I_{load}≤5mA; 5.5V≤V_s≤28V	P_2.3.32
Power Supply Rejection Ratio	$PSRR_{VDDEXT_LCM1}$	50	-	-	dB	[2] 0mA≤I_{load}≤5mA; V_r=2Vpp ; V_s=13.5V; 0kHz<f≤1kHz	P_2.3.33

1) Tested with 10 uA.

2) Not subject to production test, specified by design

29.2.5 VPRE Voltage Regulator (PMU Subblock) Parameters

Table 34 Functional Range

Parameter	Symbol	Values			Unit	Note or Test Condition	Number
		Min.	Typ.	Max.			
Specified Output Current	I_{VPRE}	0	-	90	mA	1)	P_2.4.1

1) Not subject to production test, specified by design

29.2.5.1 Load Sharing Scenario of VPRE Regulator

The figure below shows the possible load sharing scenario of VPRE regulator.

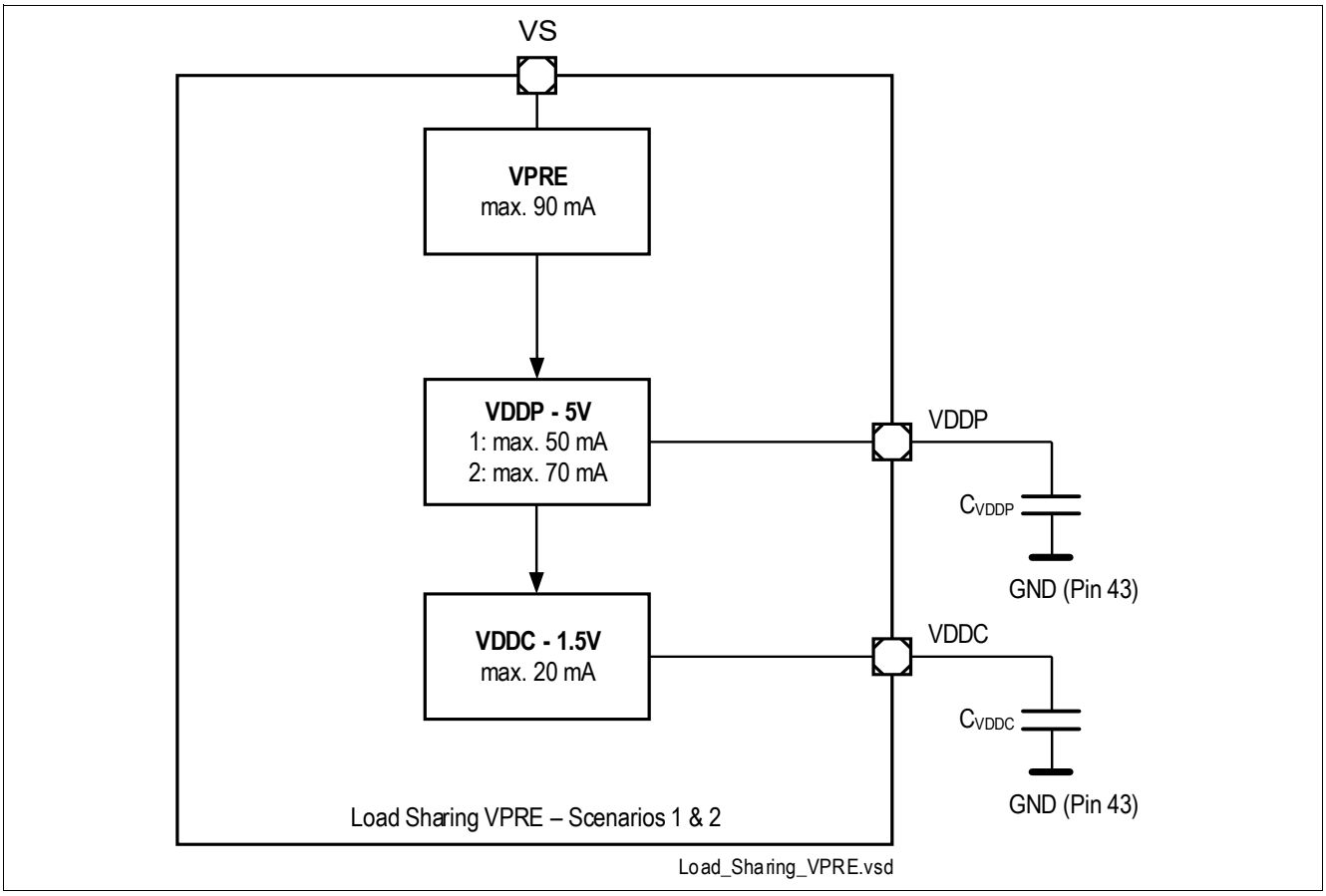

Figure 43 Load Sharing Scenario of VPRE and VDDP Regulator

29.2.6 Power Down Voltage Regulator (PMU Subblock) Parameters

The PMU Power Down voltage regulator consists of two subblocks:

- Power Down Pre regulator: VDD5VPD
- Power Down Core regulator: VDD1V5_PD (Supply used for GPUDATAxy registers)

Both regulators are used as purely internal supplies. The following table contains all relevant parameter:

Table 35 Functional Range

Parameter	Symbol	Values			Unit	Note or Test Condition	Number
		Min.	Typ.	Max.			
Power-On Reset Threshold	$V_{DD1V5_PD_RSTTH}$	1.2	-	1.5	V	[1] I_{load}=internal load connected to VDD1V5_PD	P_2.5.1

1) Not subject to production test, specified by design

29.3 System Clocks

29.3.1 Electrical Characteristics Oscillators

Table 36 PMU Oscillators (Power Management Unit)

V_S = 5.5 V to 28 V, T_j = -40°C to +150°C, all voltages with respect to ground, positive current flowing into pin (unless otherwise specified)

Parameter	Symbol	Values			Unit	Note or Test Condition	Number
		Min.	Typ.	Max.			
Frequency of LP_CLK	f_{LP_CLK}	17	20	23	MHz	this clock is used at startup	P_3.1.1
Frequency of LP_CLK2	f_{LP_CLK2}	70	100	130	kHz	this clock is used for cyclic wake	P_3.1.2

Table 37 CGU Oscillator (Clock Generation Unit Microcontroller)

V_S = 5.5 V to 28 V, T_j = -40°C to +150°C, all voltages with respect to ground, positive current flowing into pin (unless otherwise specified)

Parameter	Symbol	Values			Unit	Note or Test Condition	Number
		Min.	Typ.	Max.			
Frequency of internal oscillator	f_{INTOSC}	-1.49 %	40	+1.49 %	MHz	Including temperature and lifetime drift and supply variation; T_j≤150°C	P_3.1.4
Short term frequency deviation	f_{TRIMST}	-0.4 %	-	+0.4 %	MHz	within any 100 ms, e.g. after synchronization to a LIN frame	P_3.1.3
CGU-OSC Start-up time	t_{OSC}	-	-	10	µs	[1] startup time OSC from Sleep Mode, power supply stable	P_3.1.5

1) Not subject to production test, specified by design

29.4 Flash Parameters

This chapter includes the parameters for the 48 KB embedded flash module (incl. config sector).

29.4.1 Flash Characteristics

Table 38 Flash Characteristics

V_S = 5.5 V to 28 V, T_j = -40°C to +150°C, all voltages with respect to ground, positive current flowing into pin (unless otherwise specified)

Parameter	Symbol	Values			Unit	Note or Test Condition	Number
		Min.	Typ.	Max.			
Read time	t_{read_ac}	-	-	75	ns	[1] 3V<V_s<28V	P_4.1.22
Programming time per 128 Byte page	t_{PR}	-	3	3.5	ms	[1] 3V<V_s<28V	P_4.1.1
Programming time per 128 Byte page incl. Firmware routine runtime for program operation	t_{PR_FW}	-	-	4	ms	[1] 3V<V_s<28V	P_4.1.20
Erase time per sector/page	t_{ER}	-	4	4.5	ms	[1] 3V<V_s<28V	P_4.1.2
Erase time per sector/page incl. Firmware routine runtime for erase operation	t_{ER_FW}	-	-	5	ms	[1] 3V<V_s<28V	P_4.1.21
Data retention time	t_{RET}	20	-	-	years	[1] 1,000 erase / program cycles	P_4.1.3
Data retention time	t_{RET}	50	-	-	years	[2] [1] 1,000 erase / program cycles; T_j=30°C	P_4.1.4
Flash erase endurance for user sectors	N_{ER}	30	-	-	kcycles	[1] Data retention time 5 years	P_4.1.5
Flash erase endurance for security pages	N_{SEC}	10	-	-	cycles	[1] Data retention time 20 years; T_j=25°C	P_4.1.6
Drain disturb limit	N_{DD}	32	-	-	kcycles	[3] [1]	P_4.1.7

1) Not subject to production test, specified by design

2) Derived by extrapolation of lifetime tests.

3) This parameter limits the number of subsequent programming operations within a physical sector without a given page in this sector being (re-)programmed. The drain disturb limit is applicable if wordline erase is used repeatedly. For normal sector erase/program cycles this limit will not be violated. For data sectors the integrated EEPROM emulation firmware routines handle this limit automatically, for wordline erases in code sectors (without EEPROM emulation) it is recommended to execute a software based refresh, which may make use of the integrated random number generator NVMBRNG to statistically start a refresh.

29.5 Parallel Ports (GPIO)

29.5.1 Description of Keep and Force Current

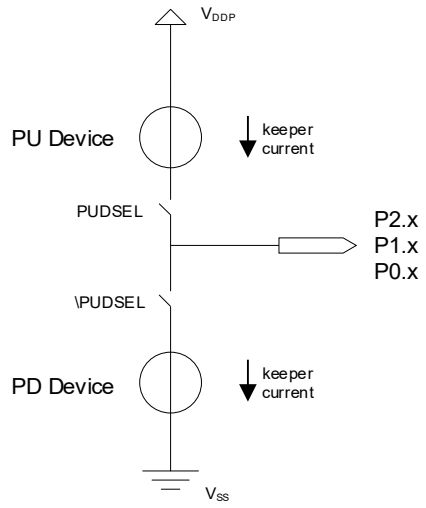

Figure 44 Pull-Up/Down Device

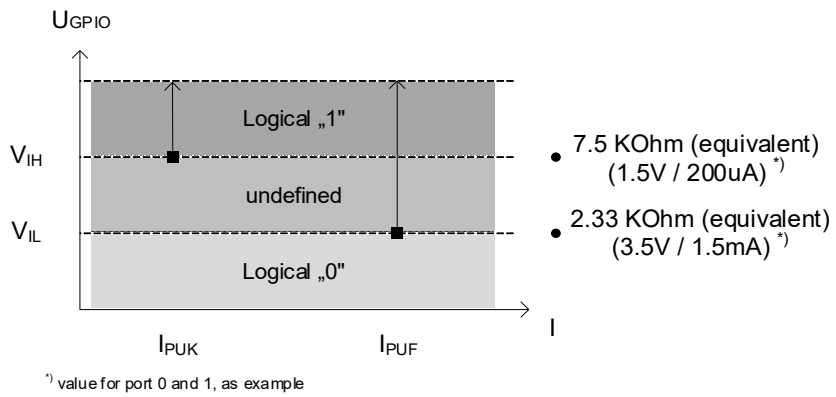

Figure 45 Pull-Up Keep and Forced Current

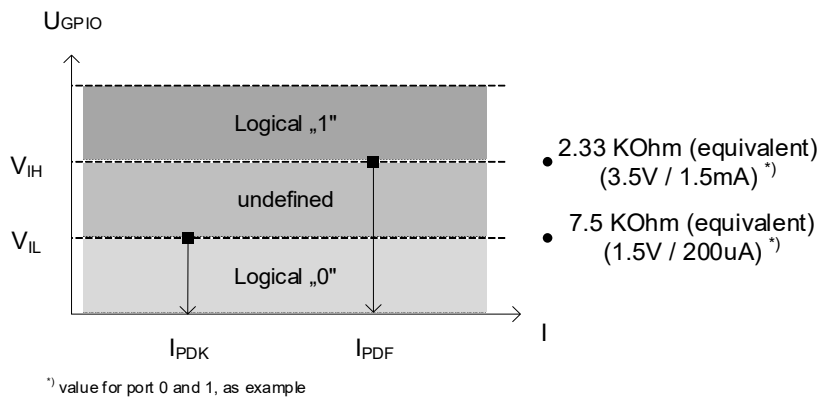

Figure 46 Pull-Down Keep and Force Current

29.5.2 DC Parameters Port 0, Port 1, TMS, Reset

Note: Operating Conditions apply.
Keeping signal levels within the limits specified in this table ensures operation without overload conditions. For signal levels outside these specifications, also refer to the specification of the overload current I_{OV}.

Table 39 DC Characteristics Port0, Port1, TMS, Reset

V_S = 5.5 V to 28 V, T_j = -40°C to +150°C, all voltages with respect to ground, positive current flowing into pin (unless otherwise specified)

Parameter	Symbol	Values			Unit	Note or Test Condition	Number
		Min.	Typ.	Max.			
Input low voltage	V_{IL}	-0.3	-	0.3 x V_{DDP}	V	2.55V≤V_{DDP}<5.5V	P_5.2.1
Input high voltage	V_{IH}	0.7 x V_{DDP}	-	V_{DDP} + 0.3	V	2.55V≤V_{DDP}<5.5V	P_5.2.2
Input Hysteresis	*HYS*	0.11 x V_{DDP}	-	-	V	[1] 4.5V≤V_{DDP}≤5.5V; Series Resistance=0Ω	P_5.2.3
Input Hysteresis	*HYSextend*	0.04 x V_{DDP}	-	-	V	[1] 2.55V≤V_{DDP}<4.5V; Series Resistance=0Ω	P_5.2.16
Output low voltage	V_{OL}	-	-	1.0	V	[2] [3] I_{OL}≤I_{OLmax} ; 2.55V≤V_{DDP}<5.5V	P_5.2.4
Output low voltage	V_{OL}	-	-	0.4	V	[2] [3] I_{OL}≤I_{OLnom} ; 2.55V≤V_{DDP}<5.5V	P_5.2.5
Output high voltage	V_{OH}	V_{DDP} - 1.0	-	-	V	[2] [3] I_{OH}≥I_{OHmax} ; 2.55V≤V_{DDP}<5.5V	P_5.2.6
Output high voltage	V_{OH}	V_{DDP} - 0.4	-	-	V	[2] [3] I_{OH}≥I_{OHnom} ; 2.55V≤V_{DDP}<5.5V	P_5.2.7
Input leakage current	I_{OZ2}	-5	-	+5	µA	[4] T_j≤85°C; 0V<V_{IN}<V_{DDP}	P_5.2.8
Input leakage current	$I_{OZ2_T_extend}$	-15	-	+15	µA	[4] T_j≤150°C; 0V<V_{IN}<V_{DDP}	P_5.2.9

Table 39 DC Characteristics Port0, Port1, TMS, Reset (cont'd)

V_S = 5.5 V to 28 V, T_j = -40°C to +150°C, all voltages with respect to ground, positive current flowing into pin (unless otherwise specified)

Parameter	Symbol	Values			Unit	Note or Test Condition	Number
		Min.	Typ.	Max.			
Pull-up level keep current	I_{PUK}	-	-	-200	µA	5) $V_{PIN} \geq V_{IH}$	P_5.2.10
Pull-up level force current	I_{PUF}	-1.5	-	-	mA	5) $V_{PIN} \leq V_{IL}$	P_5.2.11
Pull-down level keep current	I_{PDK}	200	-	-	µA	5) $V_{PIN} \leq V_{IL}$	P_5.2.26
Pull-down level force current	I_{PDF}	-	-	1.5	mA	5) $V_{PIN} \geq V_{IH}$	P_5.2.27
Pin capacitance	C_{IO}	-	-	10	pF	1)	P_5.2.12
Reset Pin Input Filter Time	T_{filt_RESET}	3	4.5	6	µs	6)	P_5.2.13

1) Not subject to production test, specified by design
2) The values for I_{OLnom}, I_{OLmax}, I_{OHnom}, I_{OHmax} depend on the driver strength settings (see register bit fields SCU_Px_POCON0.Px_PDMy) and are defined by P_5.2.20 ... P_5.2.25
3) The maximum deliverable output current of a port driver depends on the selected output driver mode. The limit for pin groups must be respected (see P_1.2.9).
4) The given values are worst-case values. In production test, this leakage current is only tested at 150°C; other values are ensured by correlation. For derating, please refer to the following descriptions:
Leakage derating depending on temperature (T_J = junction temperature [°C]):$I_{OZ} = 0.05 \times e^{(1.5 + 0.028 \times TJ)}$ [µA]. For example, at a temperature of 95°C the resulting leakage current is 3.2µA.
Leakage derating depending on voltage level (DV = V_{DDP} - V_{PIN} [V]):$I_{OZ} = I_{OZtempmax}$ - (1.6 x DV) [µA]
This voltage derating formula is an approximation which applies for maximum temperature.
5) Keep current: Limit the current through this pin to the indicated value so that the enabled pull device can keep the default pin level: $V_{PIN} \geq V_{IH}$ for a pull-up; $V_{PIN} \leq V_{IL}$ for a pull-down.
Force current: Drive the indicated minimum current through this pin to change the default pin level driven by the enabled pull device: $V_{PIN} \leq V_{IL}$ for a pull-up; $V_{PIN} \geq V_{IH}$ for a pull-down.
These values apply to the fixed pull-devices in dedicated pins and to the user-selectable pull-devices in general purpose IO pins.
6) This filter time and its variation is derived from the time base $t_{LP_CLK} = 1 / f_{LP_CLK}$.

Table 40 Current Limits for Port Output Drivers

V_S = 5.5 V to 28 V, T_j = -40°C to +150°C, all voltages with respect to ground, positive current flowing into pin (unless otherwise specified)

Parameter	Symbol	Values			Unit	Note or Test Condition	Number
		Min.	Typ.	Max.			
Output Current, Strong Driver	I_{OLs5}	-	1.6	5	mA	1) $V_{DDP} \geq 4.5V$	P_5.2.20
Output Current, Medium Driver	I_{OLm5}	-	1.0	3	mA	1) $V_{DDP} \geq 4.5V$	P_5.2.21
Output Current, Weak Driver	I_{OLw5}	-	0.25	0.5	mA	1) $V_{DDP} \geq 4.5V$	P_5.2.22

Table 40 Current Limits for Port Output Drivers (cont'd)

V_S = 5.5 V to 28 V, T_j = -40°C to +150°C, all voltages with respect to ground, positive current flowing into pin (unless otherwise specified)

Parameter	Symbol	Values			Unit	Note or Test Condition	Number
		Min.	Typ.	Max.			
Output Current, Strong Driver	I_{OLs3}	-	1.0	3	mA	[1] 2.55V<V_{DDP}<4.5V	P_5.2.23
Output Current, Medium Driver	I_{OLm3}	-	0.8	1.8	mA	[1] 2.55V<V_{DDP}<4.5V	P_5.2.24
Output Current, Weak Driver	I_{OLw3}	-	0.15	0.3	mA	[1] 2.55V<V_{DDP}<4.5V	P_5.2.25

1) These values apply for P_5.2.4 ... P_5.2.7: typ. values represent the "Nominal Output Current" (I_{OLnom}, - I_{OHnom}), max. values represent the "Maximum Output Current" (I_{OLmax}, - I_{OHmax})

29.5.3 DC Parameters Port 2

Note: Operating Conditions apply.
Keeping signal levels within the limits specified in this table ensures operation without overload conditions. For signal levels outside these specifications, also refer to the specification of the overload current I_{OV}.

Table 41 DC Characteristics Port 2

V_S = 5.5 V to 28 V, T_j = -40°C to +150°C, all voltages with respect to ground, positive current flowing into pin (unless otherwise specified)

Parameter	Symbol	Values			Unit	Note or Test Condition	Number
		Min.	Typ.	Max.			
Input low voltage	V_{IL_P2}	-0.3	-	0.3 x V_{DDP}	V	2.55V≤V_{DDP}<5.5V	P_5.3.1
Input high voltage	V_{IH_P2}	0.7 x V_{DDP}	-	V_{DDP} + 0.3	V	2.55V≤V_{DDP}<5.5V	P_5.3.2
Input Hysteresis	HYS_{P2}	0.11 x V_{DDP}	-	-	V	[1] 4.5V≤V_{DDP}≤5.5V; Series Resistance=0Ω	P_5.3.3
Input Hysteresis	HYS_{P2_extend}	0.04 x V_{DDP}	-	-	V	[1] 2.55V≤V_{DDP}<4.5V; Series Resistance=0Ω	P_5.3.10
Input leakage current	I_{OZ1_P2}	-400	-	+400	nA	; T_j≤85°C; 0V<V_{IN}<V_{DDP}	P_5.3.4
Input leakage current (extended temperature range)	$I_{OZ1_P2_T_extend}$	-1	-	+1	µA	; T_j≤150 °C ; 0V<V_{IN}<V_{DDP}	P_5.3.11
Pull-up level keep current	I_{PUK_P2}	-	-	-30	µA	[2] V_{PIN}≥V_{IH}	P_5.3.5
Pull-up level force current	I_{PUF_P2}	-750	-	-	µA	[2] V_{PIN}≤V_{IL}	P_5.3.6

Table 41 DC Characteristics Port 2 (cont'd)

V_S = 5.5 V to 28 V, T_j = -40°C to +150°C, all voltages with respect to ground, positive current flowing into pin (unless otherwise specified)

Parameter	Symbol	Values			Unit	Note or Test Condition	Number
		Min.	Typ.	Max.			
Pull-down level keep current	I_{PDK_P2}	30	-	-	µA	2) $V_{PIN} \leq V_{IL}$	P_5.3.12
Pull-down level force current	I_{PDF_P2}	-	-	750	µA	2) $V_{PIN} \geq V_{IH}$	P_5.3.13
Pin capacitance (digital inputs/outputs)	C_{IO_P2}	-	-	10	pF	1)	P_5.3.7

1) Not subject to production test, specified by design

2) Keep current: Limit the current through this pin to the indicated value so that the enabled pull device can keep the default pin level: $V_{PIN} \geq V_{IH}$ for a pull-up; $V_{PIN} \leq V_{IL}$ for a pull-down.
Force current: Drive the indicated minimum current through this pin to change the default pin level driven by the enabled pull device: $V_{PIN} \leq V_{IL}$ for a pull-up; $V_{PIN} \geq V_{IH}$ for a pull-down.

29.6 LIN Transceiver

29.6.1 Electrical Characteristics

Table 42 Bus Receiver Interface

V_S = 5.5 V to 18 V, T_j = -40°C to +150°C, all voltages with respect to ground, positive current flowing into pin (unless otherwise specified)

Parameter	Symbol	Values			Unit	Note or Test Condition	Number
		Min.	Typ.	Max.			
Receiver threshold voltage, recessive to dominant edge	V_{th_dom}	0.4 x V_S	0.45 x V_S	0.53 x V_S	V	SAE J2602	P_6.1.1
Receiver dominant state	V_{BUSdom}	-27	-	0.4 x V_S	V	LIN Spec 2.2 (Par. 17)	P_6.1.2
Receiver threshold voltage, dominant to recessive edge	V_{th_rec}	0.47 x V_S	0.55 x V_S	0.6 x V_S	V	SAE J2602	P_6.1.3
Receiver recessive state	V_{BUSrec}	0.6 x V_S	-	1.15 x V_S	V	1) LIN Spec 2.2 (Par. 18)	P_6.1.4
Receiver center voltage	V_{BUS_CNT}	0.475 x V_S	0.5 x V_S	0.525 x V_S	V	2) LIN Spec 2.2 (Par. 19)	P_6.1.5
Receiver hysteresis	V_{HYS}	0.07 V_S	0.12 x V_S	0.175 x V_S	V	3) LIN Spec 2.2 (Par. 20)	P_6.1.6
Wake-up threshold voltage	$V_{BUS,wk}$	0.4 x V_S	0.5 x V_S	0.6 x V_S	V		P_6.1.7
Dominant analog filter time for bus wake-up	$t_{WK_ana,bus}$	3	-	15	µs	analog filtertime of transceiver	P_6.1.88
Dominant time for bus wake-up	$t_{WK,bus}$	30	-	150	µs	including analog and digital filter time. Digital filter time can be adjusted by PMU.CNF_WAKE_FILTER	P_6.1.8

1) Maximum limit specified by design.

2) $V_{BUS_CNT} = (V_{th_dom} + V_{th\ rec})/2$

3) $V_{HYS} = V_{BUSrec} - V_{BUSdom}$

Table 43 Bus Transmitter Interface

V_S = 5.5 V to 18 V, T_j = -40°C to +150°C, all voltages with respect to ground, positive current flowing into pin (unless otherwise specified)

Parameter	Symbol	Values			Unit	Note or Test Condition	Number
		Min.	Typ.	Max.			
Bus recessive output voltage	$V_{BUS,ro}$	0.8 x V_S	-	V_S	V	V_{TxD}=high Level	P_6.1.9
Bus short circuit current	$I_{BUS,sc}$	40	100	150	mA	Current Limitation for driver dominant state driver on V_{BUS}=18V; LIN Spec 2.2 (Par. 12)	P_6.1.10
Leakage current	$I_{BUS_NO_GND}$	-1000	-450	0	µA	LIN Spec 2.2 (Par. 15); V_{BUS}=-12V; V_s=0V	P_6.1.11
Leakage current	$I_{BUS_NO_BAT}$	-	10	20	µA	LIN Spec 2.2 (Par. 16); V_{BUS}=18V; V_s=0V	P_6.1.12
Leakage current	$I_{BUS_PAS_dom}$	-1	-	-	mA	LIN Spec 2.2 (Par. 13); V_{BUS}=0V; V_s=18V	P_6.1.13
Leakage current	$I_{BUS_PAS_rec}$	-	-	20	µA	LIN Spec 2.2 (Par. 14); V_{BUS}=18V; V_s=8V	P_6.1.14
Bus pull-up resistance	R_{BUS}	20	30	47	kOhm	Normal mode LIN Spec 2.2 (Par. 26), also present in Sleep mode	P_6.1.15

Table 44 AC Characteristics - Transceiver Normal Slope Mode

V_S = 5.5 V to 18 V, T_j = -40°C to +150°C, all voltages with respect to ground, positive current flowing into pin (unless otherwise specified)

Parameter	Symbol	Values			Unit	Note or Test Condition	Number
		Min.	Typ.	Max.			
Propagation delay bus dominant to RxD LOW	$t_{d(L),R}$	0.1	1	6	µs	LIN Spec 2.2 (Param. 31)	P_6.1.16
Propagation delay bus recessive to RxD HIGH	$t_{d(H),R}$	0.1	1	6	µs	LIN Spec 2.2 (Param. 31)	P_6.1.17
Receiver delay symmetry	$t_{sym,R}$	-2	-	2	µs	LIN Spec 2.2 (Par. 32); $t_{sym,R}=t_{d(L),R} - t_{d(H),R}$	P_6.1.18

Table 44 AC Characteristics - Transceiver Normal Slope Mode (cont'd)

V_S = 5.5 V to 18 V, T_j = -40°C to +150°C, all voltages with respect to ground, positive current flowing into pin (unless otherwise specified)

Parameter	Symbol	Values			Unit	Note or Test Condition	Number
		Min.	Typ.	Max.			
Duty cycle D1 Normal Slope Mode(for worst case at 20 kbit/s)	t_{duty1}	0.396	-	-		[1] duty cycle 1, LIN Spec 2.2 (Par. 27); $D1=t_{bus_rec(min)}/2\ t_{bit}$; TH_{Dom}(max)=0.581xV_S ; TH_{Rec}(max)=0.744xV_S ; 5.5V≤V_s≤18V; t_{bit}=50µs	P_6.1.19
Duty cycle D2 Normal Slope Mode(for worst case at 20 kbit/s)	t_{duty2}	-	-	0.581		[1] duty cycle 2, LIN Spec 2.2 (Par. 28); $D2=t_{bus_rec(max)}/2\ t_{bit}$; TH_{Dom}(max)=0.284xV_S ; TH_{Rec}(max)=0.422xV_S ; 5.5V≤V_s≤18V; t_{bit}=50µs	P_6.1.20

1) Bus load concerning LIN Spec. 2.2: Load 1 = 1 nF / 1 kΩ = C_{BUS} / R_{BUS}, Load 2 = 6.8 nF / 660 Ω = C_{BUS} / R_{BUS}, Load 3 = 10 nF / 500 Ω = C_{BUS} / R_{BUS}

Table 45 AC Characteristics - Transceiver Low Slope Mode

V_S = 5.5 V to 18 V, T_j = -40°C to +150°C, all voltages with respect to ground, positive current flowing into pin (unless otherwise specified)

Parameter	Symbol	Values			Unit	Note or Test Condition	Number
		Min.	Typ.	Max.			
Propagation delay bus dominant to RxD LOW	$t_{d(L),R_LSM}$	0.1	1	6	µs	LIN Spec 2.2 (Param. 31)	P_6.1.21
Propagation delay bus recessive to RxD HIGH	$t_{d(H),R_LSM}$	0.1	1	6	µs	LIN Spec 2.2 (Param. 31)	P_6.1.22
Receiver delay symmetry	t_{sym,R_LSM}	-2	-	2	µs	LIN Spec 2.2 (Par. 32); $t_{sym,R}=t_{d(L),R} - t_{d(H),R}$	P_6.1.23

Table 45 AC Characteristics - Transceiver Low Slope Mode (cont'd)

V_S = 5.5 V to 18 V, T_j = -40°C to +150°C, all voltages with respect to ground, positive current flowing into pin (unless otherwise specified)

Parameter	Symbol	Values			Unit	Note or Test Condition	Number
		Min.	Typ.	Max.			
Duty cycle D3(for worst case at 10.4 kbit/s)	t_{duty1_LSM}	0.417	-	-		[1] duty cycle 3 LIN Spec 2.2 (Par. 29); $D3=t_{bus_rec(min)}/2\ t_{bit}$; $TH_{Dom}(max)=0.616xV_S$; $TH_{Rec}(max)=0.778xV_S$; $5.5V \le V_s \le 18V$; t_{bit}=96µs	P_6.1.24
Duty cycle D4(for worst case at 10.4 kbit/s)	t_{duty2_LSM}	-	-	0.590		[1] duty cycle 4 LIN Spec 2.2 (Par. 30); $D4=t_{bus_rec(max)}/2\ t_{bit}$; $TH_{Dom}(max)=0.251xV_S$; $TH_{Rec}(max)=0.389xV_S$; $5.5V \le V_s \le 18V$; t_{bit}=96µs	P_6.1.25

1) Bus load concerning LIN Spec. 2.2: Load 1 = 1 nF / 1 kΩ = C_{BUS} / R_{BUS}, Load 2 = 6.8 nF / 660 Ω = C_{BUS} / R_{BUS}, Load 3 = 10 nF / 500 Ω = C_{BUS} / R_{BUS}

Table 46 AC Characteristics - Transceiver Fast Slope Mode

V_S = 5.5 V to 18 V, T_j = -40°C to +150°C, all voltages with respect to ground, positive current flowing into pin (unless otherwise specified)

Parameter	Symbol	Values			Unit	Note or Test Condition	Number
		Min.	Typ.	Max.			
Propagation delay bus dominant to RxD LOW	$t_{d(L),R_FSM}$	0.1	1	6	µs		P_6.1.26
Propagation delay bus recessive to RxD HIGH	$t_{d(H),R_FSM}$	0.1	1	6	µs		P_6.1.27
Receiver delay symmetry (LIN Spec V1.3 supply voltage range)	$t_{sym,R_VS_SpecV1.3}$	-1.5	-	1.5	µs	$7V \le V_s \le 18V$; $t_{sym,R}=t_{d(L),R} - t_{d(H),R}$	P_6.1.28
Receiver delay symmetry	t_{sym,R_FSM}	-2.0	-	2.0	µs	$t_{sym,R}=t_{d(L),R} - t_{d(H),R}$	P_6.1.42

Table 46 AC Characteristics - Transceiver Fast Slope Mode (cont'd)

V_S = 5.5 V to 18 V, T_j = -40°C to +150°C, all voltages with respect to ground, positive current flowing into pin (unless otherwise specified)

Parameter	Symbol	Values			Unit	Note or Test Condition	Number
		Min.	Typ.	Max.			
Duty cycle D5(used for 62.5 kbit/s)	t_{duty1_FSM}	0.395	-	-		[1] duty cycle 5; $D1=t_{bus_rec(min)}/2\ t_{bit}$; TH_{Dom}(max)=0.581xV_S ; TH_{Rec}(max)=0.744xV_S ; 5.5V≤V_s≤18V; t_{bit}=25µs	P_6.1.29
Duty cycle D6(used for 62.5 kbit/s)	t_{duty2_FSM}	-	-	0.581		[1] duty cycle 6; $D2=t_{bus_rec(max)}/2\ t_{bit}$; TH_{Dom}(max)=0.284xV_S ; TH_{Rec}(max)=0.422xV_S ; t_{bit}=25µs	P_6.1.30

1) Bus load concerning LIN Spec. 2.2: Load 1 = 1 nF / 1 kΩ = C_{BUS} / R_{BUS}, Load 2 = 6.8 nF / 660 Ω = C_{BUS} / R_{BUS}, Load 3 = 10 nF / 500 Ω = C_{BUS} / R_{BUS}

Table 47 AC Characteristics - Flash Mode

V_S = 5.5 V to 18 V, T_j = -40°C to +150°C, all voltages with respect to ground, positive current flowing into pin (unless otherwise specified)

Parameter	Symbol	Values			Unit	Note or Test Condition	Number
		Min.	Typ.	Max.			
Propagation delay bus dominant to RxD LOW	$t_{d(L),R_FM}$	0.1	0.5	6	µs		P_6.1.31
Propagation delay bus recessive to RxD HIGH	$t_{d(H),R_FM}$	0.1	0.5	6	µs		P_6.1.32
Receiver delay symmetry (LIN Spec V1.3 supply voltage range)	$t_{sym,R_VS_SpecV1_3}$	-1.0	-	1.5	µs	7V≤V_s≤18V; $t_{sym,R}=t_{d(L),R} - t_{d(H),R}$	P_6.1.33
Receiver delay symmetry	t_{sym,R_FM}	-2.0	-	2.0	µs	$t_{sym,R}=t_{d(L),R} - t_{d(H),R}$	P_6.1.86
Duty cycle D7(for worst case at 115 kbit/s)for +1 us Receiver delay symmetry (used for 250 kbit/s programming)	t_{duty1_FM}	0.395	-	-		[1] duty cycle D7; $D7=t_{bus_rec(min)}/(2 \times t_{bit})$; TH_{Dom}(max)=0.581xV_S ; TH_{Rec}(max)=0.744xV_S ; t_{bit}=8.7µs	P_6.1.34

Table 47 AC Characteristics - Flash Mode (cont'd)

V_S = 5.5 V to 18 V, T_j = -40°C to +150°C, all voltages with respect to ground, positive current flowing into pin (unless otherwise specified)

Parameter	Symbol	Values			Unit	Note or Test Condition	Number
		Min.	Typ.	Max.			
Duty cycle D8(for worst case at 115 kbit/s)for +1 us Receiver delay symmetry (used for 250 kbit/s programming)	t_{duty2_FM}	-	-	0.578		[1] duty cycle 8; $D8=t_{bus_rec(max)}/(2 \times t_{bit})$; $TH_{Dom}(max)=0.284xV_S$; $TH_{Rec}(max)=0.422xV_S$; t_{bit}=8.7µs	P_6.1.35
LIN input capacity	C_{LIN_IN}	-	15	30	pF	[2]	P_6.1.36

1) Bus load: Load 1 = 1 nF / 500 Ω = C_{BUS} / R_{BUS}

2) Not subject to production test, specified by design

Table 48 AC Characteristics - Other Timings

V_S = 5.5 V to 18 V, T_j = -40°C to +150°C, all voltages with respect to ground, positive current flowing into pin (unless otherwise specified)

Parameter	Symbol	Values			Unit	Note or Test Condition	Number
		Min.	Typ.	Max.			
TxD dominant time out	$t_{timeout}$	6	12	20	ms	V_{TxD}=0V	P_6.1.37

Table 49 Thermal Shutdown (Junction Temperature)

V_S = 5.5 V to 18 V, T_j = -40°C to +150°C, all voltages with respect to ground, positive current flowing into pin (unless otherwise specified)

Parameter	Symbol	Values			Unit	Note or Test Condition	Number
		Min.	Typ.	Max.			
Thermal shutdown temp.	T_{jSD}	180	200	215	°C	[1]	P_6.1.38
Thermal shutdown hyst.	ΔT	-	10	-	K	[1]	P_6.1.39

1) Not subject to production test, specified by design

29.7 High-Speed Synchronous Serial Interface

29.7.1 SSC Timing

The table below provides the SSC timing in the TLE9853QX:

Table 50 SSC Master Mode Timing (Operating Conditions apply, CL = 50 pF)

V_S = 5.5 V to 28 V, T_j = -40°C to +150°C, all voltages with respect to ground, positive current flowing into pin (unless otherwise specified)

Parameter	Symbol	Values			Unit	Note or Test Condition	Number
		Min.	Typ.	Max.			
SCLK clock period	t_0	2 x T_{SSC}	-	-		[1) 2)] V_{DDP}>2.7V	P_7.1.1
MTSR delay from SCLK	t_1	10	-	-	ns	[2)] V_{DDP}>2.7V	P_7.1.2
MRST setup to SCLK	t_2	10	-	-	ns	[2)] V_{DDP}>2.7V	P_7.1.3
MRST hold from SCLK	t_3	15	-	-	ns	[2)] V_{DDP}>2.7V	P_7.1.4

1) $T_{SSCmin} = T_{CPU} = 1/f_{CPU}$.
If f_{CPU} = 20 MHz, t_0 = 100 ns. T_{CPU} is the CPU clock period.

2) Not subject to production test, specified by design

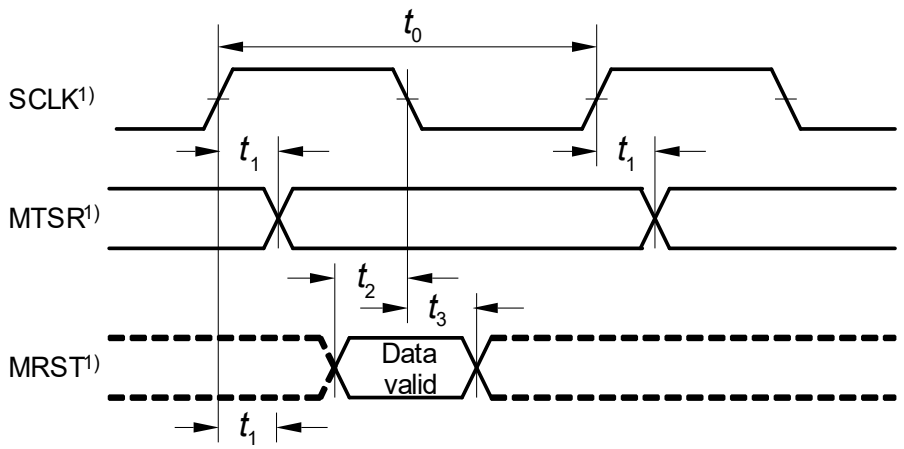

1) This timing is based on the following setup: CON.PH = CON.PO = 0.

SSC_Tmg1

Figure 47 SSC Master Mode Timing

29.8 Measurement Unit

29.8.1 Electrical Characteristics

Table 51 ADC1 - Battery / Supply Voltage Measurement V_{BAT_SENSE}, V_S

V_S = 5.5 V to 28 V, T_j = -40°C to +150°C, all voltages with respect to ground, positive current flowing into pin (unless otherwise specified)

Parameter	Symbol	Values			Unit	Note or Test Condition	Number
		Min.	Typ.	Max.			
Input to output voltage attenuation: V_{BAT_SENSE}/V_S	ATT_{VBAT_SENSE}, ATT_{VS}	-	0.047	-			P_8.1.10
Nominal operating input voltage range V_{BAT_SENSE}/V_S	$V_{BAT_SENSE, range}$, $V_{S, range}$	0	-	25.77	V	[1] Max. value corresponds to typ. ADC full scale input; calculated: typ. V_{BG}/ typ. ATT_{VBAT_SENSE}	P_8.1.11
Accuracy of V_{BAT_SENSE}/V_S after calibration - with IIR filter	$\Delta V_{BAT_SENSE_IIR}$, ΔV_{S_IIR}	-200	-	200	mV	-40°C≤T_j≤150°C; 5.5V≤V_s≤28V; ADC1_FILTCOEFF0_13 .CHx=11_B ; f_{ADCI}=f_{sys_max}	P_8.1.12
Accuracy of V_{BAT_SENSE}/V_S after calibration	ΔV_{BAT_SENSE}, ΔV_S	-300	-	300	mV	-40°C≤T_j≤150°C; 5.5V≤V_s≤28V; f_{ADCI}=f_{sys_max}	P_8.1.49

1) Not subject to production test, specified by design

Table 52 ADC1 - Monitoring Input Voltage Measurement V_{MONx}

V_S = 5.5 V to 28 V, T_j = -40°C to +150°C, all voltages with respect to ground, positive current flowing into pin (unless otherwise specified)

Parameter	Symbol	Values			Unit	Note or Test Condition	Number
		Min.	Typ.	Max.			
Input to output voltage attenuation: VMONx	ATT_{VMONx}	-	0.039	-			P_8.1.13
Nominal operating input voltage range VMONx	$V_{MONx,range}$	0	-	31.05	V	[1] Max. value corresponds to typ. ADC full scale input; calculated: typ. V_{BG}/ typ. ATT_{VMONx}	P_8.1.14

Table 52 ADC1 - Monitoring Input Voltage Measurement V_{MONx}

V_S = 5.5 V to 28 V, T_j = -40°C to +150°C, all voltages with respect to ground, positive current flowing into pin (unless otherwise specified)

Parameter	Symbol	Values			Unit	Note or Test Condition	Number
		Min.	Typ.	Max.			
Accuracy of V_{MONx} sense after calibration - with IIR filter	ΔV_{MONx_IIR}	-250	-	250	mV	-40°C≤T_j≤150°C; 5.5V≤V_S≤28V; ADC1_FILTCOEFF0_13 .CHx=11_B ; f_{ADCI}=f_{sys_max}	P_8.1.33
Accuracy of V_{MONx} sense after calibration	ΔV_{MONx}	-361	-	361	mV	-40°C≤T_j≤150°C; 5.5V≤V_S≤28V; f_{ADCI}=f_{sys_max}	P_8.1.50

1) Not subject to production test, specified by design

Table 53 ADC1 - Port 2.x Voltage Measurement $V_{2.x}$

V_S = 5.5 V to 28 V, T_j = -40°C to +150°C, all voltages with respect to ground, positive current flowing into pin (unless otherwise specified)

Parameter	Symbol	Values			Unit	Note or Test Condition	Number
		Min.	Typ.	Max.			
Input to output voltage attenuation: VPort2.x	$ATT_{2.x}$	-	0.227	-			P_8.1.15
Nominal operating input voltage range VPort2.x	$V_{Port2.x,range}$	0	-	V_{DDPOUT}	V	[1] Max. value corresponds to typ. ADC full scale input; calculated: typ. V_{BG}/ typ. $ATT_{2.x}$	P_8.1.16
Accuracy of $V_{Port2.x}$ sense after calibration - with IIR filter	$\Delta V_{Port2.x_IIR}$	-50	-	50	mV	ADC1_FILTCOEFF0_13 .CHx=11_B ; f_{ADCI}=f_{sys_max}	P_8.1.34
Accuracy of $V_{Port2.x}$ sense after calibration	$\Delta V_{Port2.x}$	-67	-	67	mV	f_{ADCI}=f_{sys_max}	P_8.1.51

1) Not subject to production test, specified by design

Table 54 ADC1 - OPA Voltage Measurement V_{OPA}

V_S = 5.5 V to 28 V, T_j = -40°C to +150°C, all voltages with respect to ground, positive current flowing into pin (unless otherwise specified)

Parameter	Symbol	Values			Unit	Note or Test Condition	Number
		Min.	Typ.	Max.			
Input to output voltage attenuation: V_{OPA}	ATT_{OPA}	-	0.265	-			P_8.1.36
Nominal operating input voltage range V_{OPA}	$V_{OPA,range}$	0	-	4.57	V	[1] Max. value corresponds to typ. ADC full scale input; calculated: typ. V_{BG}/ typ. ATT_{OPA}	P_8.1.37
Accuracy of V_{OPA} sense after calibration - with IIR filter [2]	ΔV_{OPA_IIR}	- 75	-	75	mV	V_{OP1}=0V; V_{OP2}=0V; 5.5V≤V_s≤28V; ADC1_FILTCOEFF0_13 .CHx=11_B ; CSA gain=40 ; f_{ADCI}=f_{sys_max}	P_8.1.38
Accuracy of V_{OPA} sense after calibration [2]	ΔV_{OPA}	-95	-	95	mV	V_{OP1}=0V; V_{OP2}=0V; 5.5V≤V_s≤28V; CSA gain=40 ; f_{ADCI}=f_{sys_max}	P_8.1.52

1) Not subject to production test, specified by design

2) CSA + ADC1 (i.e. P_8.1.38 includes P_13.1.5 and P_13.1.7)

Table 55 ADC2 - Supply Voltage Measurement V_S

V_S = 5.5 V to 28 V, T_j = -40°C to +150°C, all voltages with respect to ground, positive current flowing into pin (unless otherwise specified)

Parameter	Symbol	Values			Unit	Note or Test Condition	Number
		Min.	Typ.	Max.			
Input to output voltage attenuation: V_S	ATT_{VS_ADC2}	-	0.039	-			P_8.1.1
Nominal operating input voltage range V_S	$V_{S,ADC2}$	3	-	31.05	V	[1] Max. value corresponds to typ. ADC full scale input; calculated: typ. V_{BG}/ typ. ATT_{VS_ADC2}	P_8.1.2
Accuracy of V_S after calibration	$\Delta V_{S,ADC2}$	-320	-	320	mV	-40°C≤T_j≤150°C; 5.5V≤V_s≤28V	P_8.1.3

1) Not subject to production test, specified by design

Table 56 ADC2 - Supply Voltage Measurement V_{SD}

V_S = 5.5 V to 28 V, T_j = -40°C to +150°C, all voltages with respect to ground, positive current flowing into pin (unless otherwise specified)

Parameter	Symbol	Values			Unit	Note or Test Condition	Number
		Min.	Typ.	Max.			
Input to output voltage attenuation: V_{SD}	ATT_{VSD_ADC2}	-	0.039	-			P_8.1.44
Nominal operating input voltage range V_{SD}	$V_{SD,ADC2}$	3	-	31.05	V	1) Max. value corresponds to typ. ADC full scale input; calculated: typ. V_{BG}/ typ. ATT_{VSD_ADC2}	P_8.1.39
Accuracy of V_{SD} after calibration	$\Delta V_{SD,ADC2}$	-320	-	320	mV	-40°C≤T_j≤150°C; 5.5V≤V_s≤28V	P_8.1.40

1) Not subject to production test, specified by design

Table 57 ADC2 - Supply Voltage Measurement V_{CP}

V_S = 5.5 V to 28 V, T_j = -40°C to +150°C, all voltages with respect to ground, positive current flowing into pin (unless otherwise specified)

Parameter	Symbol	Values			Unit	Note or Test Condition	Number
		Min.	Typ.	Max.			
Input to output voltage attenuation: V_{CP}	ATT_{VCP_ADC2}	-	0.023	-			P_8.1.41
Nominal operating input voltage range V_{CP}	$V_{CP,ADC2}$	3	-	52.65	V	1) 2) Max. value corresponds to typ. ADC full scale input; calculated: typ. V_{BG}/ typ. ATT_{VCP_ADC2}	P_8.1.42
Accuracy of V_{CP} after calibration	$\Delta V_{CP,ADC2}$	-650	-	650	mV	-40°C≤T_j≤150°C; 5.5V≤V_s≤28V	P_8.1.43

1) This is the theoretical nominal full-scale input range of the measurement chain. The allowed input voltage range at the pin is given in the "Absolute Maximum Ratings" section.

2) Not subject to production test, specified by design

Table 58 ADC2 - VDDEXT Voltage Measurement V_{DDEXT}

V_S = 5.5 V to 28 V, T_j = -40°C to +150°C, all voltages with respect to ground, positive current flowing into pin (unless otherwise specified)

Parameter	Symbol	Values			Unit	Note or Test Condition	Number
		Min.	Typ.	Max.			
Input to output voltage attenuation: VDDEXT	ATT_{VDDEXT}	-	0.195	-			P_8.1.17
Nominal operating input voltage range VDDEXT	$V_{DDEXT,range}$	0	-	5.97	V	1) Max. value corresponds to typ. ADC full scale input; calculated: typ. V_{BG}/ typ. ATT_{VCP_VDDEXT}	P_8.1.18

1) Not subject to production test, specified by design

Table 59 ADC2 - Pad Supply Voltage Measurement V_{VDDP}

V_S = 5.5 V to 28 V, T_j = -40°C to +150°C, all voltages with respect to ground, positive current flowing into pin (unless otherwise specified)

Parameter	Symbol	Values			Unit	Note or Test Condition	Number
		Min.	Typ.	Max.			
Input-to-output voltage attenuation: VDDP	ATT_{VDDP}	-	0.195	-			P_8.1.4
Nominal operating input voltage range VDDP	$V_{DDP,range}$	0	-	V_{DDPOUT} + 0.3	V	1) Max. value corresponds to typ. ADC full scale input; calculated: typ. V_{BG}/ typ. ATT_{VDDP}	P_8.1.5

1) Not subject to production test, specified by design

Table 60 ADC2 - Reference Voltage Measurement V_{PMUBG}

V_S = 5.5 V to 28 V, T_j = -40°C to +150°C, all voltages with respect to ground, positive current flowing into pin (unless otherwise specified)

Parameter	Symbol	Values			Unit	Note or Test Condition	Number
		Min.	Typ.	Max.			
Input-to-output voltage attenuation: VBG	ATT_{PMUVBG}	-	0.75	-		1)	P_8.1.6

Table 60 ADC2 - Reference Voltage Measurement V_{PMUBG}

V_S = 5.5 V to 28 V, T_j = -40°C to +150°C, all voltages with respect to ground, positive current flowing into pin (unless otherwise specified)

Parameter	Symbol	Values			Unit	Note or Test Condition	Number
		Min.	Typ.	Max.			
Nominal operating input voltage range VBG	$V_{PMUBG,range}$	0.8	-	V_{DDC} - 0.1	V	[1] Max. value corresponds to typ. ADC full scale input; calculated: typ. V_{BG}/ typ. ATT_{VBG}	P_8.1.7
Value of ADC2-V_{PMUBG} measurement after calibration	V_{PMUBG}	0.9	1.0	1.1	V		P_8.1.45

1) Not subject to production test, specified by design

Table 61 ADC2 - Core supply Voltage Measurement V_{DDC}

V_S = 5.5 V to 28 V, T_j = -40°C to +150°C, all voltages with respect to ground, positive current flowing into pin (unless otherwise specified)

Parameter	Symbol	Values			Unit	Note or Test Condition	Number
		Min.	Typ.	Max.			
Input-to-output voltage attenuation: VDDC	ATT_{VDDC}	-	0.75	-			P_8.1.8
Nominal operating input voltage range VDDC	$V_{DDC,range}$	0.6	-	V_{DDC} + 0.1	V	[1] Max. value corresponds to typ. ADC full scale input; calculated: typ. V_{BG}/ typ. ATT_{VDDC}	P_8.1.9

1) Not subject to production test, specified by design

29.8.2 Central Temperature Sensor Module

29.8.2.1 Electrical Characteristics

Table 62 Temperature Sensor Specifications

V_S = 5.5 V to 28 V, T_j = -40°C to +150°C; all voltages with respect to ground, positive current flowing into pin (unless otherwise specified)

Parameter	Symbol	Values			Unit	Note or Test Condition	Number
		Min.	Typ.	Max.			
Output voltage V_{TEMP} at T_0=0°C (273 K)	*a*	-	0.628	-	V	1) T_0=0°C	P_8.2.1
Temperature sensitivity b	*b*	-	2.31	-	mV/K	1)	P_8.2.2
Accuracy_1	*Acc_1*	-10	-	10	°C	2) -40°C<T_j<85°C	P_8.2.3
Accuracy_2	*Acc_2*	-10	-	10	°C	1) 125°C<T_j<150 °C	P_8.2.4
Accuracy_3	*Acc_3*	-5	-	5	°C	85°C<T_j<125°C	P_8.2.5

1) Not subject to production test, specified by design

2) Accuracy with reference to on-chip temperature calibration measurement, valid for Mode1

29.9 ADC1 (10-Bit)

29.9.1 Electrical Characteristics ADC1 (10-Bit)

These parameters describe the conditions for optimum ADC performance.

Note: Operating Conditions apply.

Table 63 Timing and AC Specification

V_S = 5.5 V to 28 V, T_j = -40°C to +150°C; all voltages with respect to ground, positive current flowing into pin (unless otherwise specified)

Parameter	Symbol	Values			Unit	Note or Test Condition	Number
		Min.	Typ.	Max.			
Analog clock frequency	f_{ADCI}	5	-		MHz	1)	P_9.2.1

1) The limit values for f_{ADCI} must not be exceeded when selecting the peripheral frequency and the prescaler setting.

Table 64 DC Specification

V_S = 5.5 V to 28 V, T_j = -40°C to +150°C; all voltages with respect to ground, positive current flowing into pin (unless otherwise specified)

Parameter	Symbol	Values			Unit	Note or Test Condition	Number
		Min.	Typ.	Max.			
DNL error	EA_{DNL}	-2	-	2	LSB		P_9.2.8
INL error	EA_{INL}	-2	-	2	LSB	T_j≤150°C	P_9.2.9
Gain error	EA_{GAIN}	-1.2	-	1.2	% of FSR	1) 2) Already calibrated by implemented calibration unit	P_9.2.10
Offset error	EA_{OFF}	-2.5	-	2.5	LSB	2) already calibrated; T_j≤150°C	P_9.2.11
Total unadjusted error	EA_{TUE}	-10	-	10	LSB	2) already calibrated	P_9.2.33
Cross-coupling Attenuation between LV Channels	EA_{CCOUP}	-2	-	2	LSB	2)	P_9.2.12
Input capacitance of a HV analog input	C_{AINT_HVI}	-	-	200	fF	2)	P_9.2.13
Input capacitance of a LV analog input	C_{AINT_LVI}	-	-	200	fF	2)	P_9.2.19

1) This Gain error is calibrated by IFX end of line

2) Not subject to production test, specified by design

29.10 High-Voltage Monitoring Input

29.10.1 Electrical Characteristics

Table 65 Electrical Characteristics Monitoring Input

V_S = 5.5 V to 28 V; T_j = -40°C to +150°C; all voltages with respect to ground, positive current flowing into pin (unless otherwise specified)

Parameter	Symbol	Values			Unit	Note or Test Condition	Number
		Min.	Typ.	Max.			
Wake-up/monitoring threshold voltage	V_{MONth}	0.4 x V_S	0.5 x V_S	0.6 x V_S	V	without external serial resistor R_s (with R_s:dV = $I_{PD/PU}$* R_s);	P_10.1.1
Threshold hysteresis	$V_{MONth,hys}$	0.02 x V_S	0.06 x V_S	0.12 x V_S	V	in all modes; without external serial resistor R_s (with R_s:dV = $I_{PD/PU}$* R_s);	P_10.1.2
Pull-up current	$I_{PU, MON}$	-20	-10	-5	µA	V_{MON_IN}=0.6*V_s	P_10.1.3
Pull-down current	$I_{PD, MON}$	5	10	20	µA	V_{MON_IN}=0.4*V_s	P_10.1.4
Input leakage current	$I_{LK,MON}$	-2	-	2	µA	1) T_j<150°C; 0V<V_{MON_IN}<28V	P_10.1.5
Wake-up filter time	$t_{FT,MON}$	-	20	-	µs	2)	P_10.1.6

1) Valid for enabled module. Pull-up and pull down current functionality disabled; ADC1 off.

2) With pull-up, pull down current disabled.

29.11 High Side Switch

29.11.1 Electrical Characteristics

Table 66 Operating areas

V_S = 5.5 V to 28 V, T_j = -40°C to +150°C, all voltages with respect to ground, positive current flowing into pin (unless otherwise specified)

Parameter	Symbol	Values			Unit	Note or Test Condition	Number
		Min.	Typ.	Max.			
PWM frequency of HS with Slew Rate Control	$f_{PWM_W_SR}$	0	-	10	kHz	[1] Frequency must be configured in the PWM Generator	P_11.1.1
PWM frequency of HS without Slew Rate Control	f_{PWM_W/O_SR}	0	-	25	kHz	[2] [1] Frequency must be configured in the PWM Generator (minimum ON / OFF time 5 us)	P_11.1.2

1) Not subject to production test, specified by design

2) Referring to a 47Ohm series resistor to charge an external power mos gate.

Table 67 Output HS

V_S = 5.5 V to 28 V, T_j = -40°C to +150°C, all voltages with respect to ground, positive current flowing into pin (unless otherwise specified)

Parameter	Symbol	Values			Unit	Note or Test Condition	Number
		Min.	Typ.	Max.			
ON-State Resistance	R_{ON}	3.5	10	15	Ohm	V_s=13.5V; Ids=100mA	P_11.1.3
Output leakage Current	$I_{leakage}$	-1.5	-	-	µA	Output OFF; -0.3V<V_{HS}<V_S	P_11.1.4
Output Slew Rate (rising) with slow Slew Rate setting (Slew Rate 1)	SR_{raise_SR1}	1.5	-	7	V/µs	20% to 80% of V_S; C_L=1nF; R_L=300Ω	P_11.1.5
Output Slew Rate (falling) with slow Slew Rate setting (Slew Rate 1)	SR_{fall_SR1}	-7	-	-1.5	V/µs	80% to 20% of V_S; C_L=1nF; R_L=300Ω	P_11.1.6
Output Slew Rate (rising) with fast Slew Rate setting (Slew Rate 2)	SR_{raise_SR2}	21	-	80	V/µs	20% to 80% of V_S; C_L=1nF; R_L=300Ω	P_11.1.7
Output Slew Rate (falling) with fast Slew Rate setting (Slew Rate 2)	SR_{fall_SR2}	-30	-	-3	V/µs	80% to 20% of V_S; C_L=1nF; R_L=300Ω	P_11.1.8

Table 67 Output HS (cont'd)

V_S = 5.5 V to 28 V, T_j = -40°C to +150°C, all voltages with respect to ground, positive current flowing into pin (unless otherwise specified)

Parameter	Symbol	Values			Unit	Note or Test Condition	Number
		Min.	Typ.	Max.			
Output Slew Rate (rising) with Slew Rate setting for low Emission (Slew Rate 3)	SR_{raise_SR3}	0.3	-	1.8	V/µs	20% to 80% of V_S; C_L=1nF; R_L=300Ω	P_11.1.59
Output Slew Rate (falling) with Slew Rate setting for low Emission (Slew Rate 3)	SR_{fall_SR3}	-1.8	-	-0.3	V/µs	80% to 20% of V_S; C_L=1nF; R_L=300Ω	P_11.1.60
Turn ON Delay time (Slew Rate 1)	$t_{IN\text{-}HS_SR1}$	1.1	2.2	3.6	µs	ON=1 to 20% of V_S; C_L=1nF; R_L=300Ω	P_11.1.9
Turn ON time (Slew Rate 1)	t_{ON_SR1}	2.1	-	8.8	µs	HS_ON=1 to 80% of V_S; C_L=1nF; R_L=300Ω	P_11.1.10
Turn OFF time (Slew Rate 1)	t_{OFF_SR1}	5	-	16	µs	HS_ON=0 to 20% of V_S; C_L=1nF; R_L=300Ω	P_11.1.11
Turn ON Delay time (Slew Rate 2)	$t_{IN\text{-}HS_SR2}$	0.08	0.22	0.38	µs	ON=1 to 20% of V_S; C_L=1nF; R_L=300Ω	P_11.1.55
Turn ON time (Slew Rate 2)	t_{ON_SR2}	0.2	-	1.2	µs	HS_ON=1 to 80% of V_S; C_L=1nF; R_L=300Ω	P_11.1.56
Turn OFF time (Slew Rate 2)	t_{OFF_SR2}	1.1	-	2.7	µs	HS_ON=0 to 20% of V_S; C_L=1nF; R_L=300Ω	P_11.1.57
Turn ON Delay time (Slew Rate 3)	$t_{IN\text{-}HS_SR3}$	3.5	8.2	13.5	µs	ON=1 to 20% of V_S; C_L=1nF; R_L=300Ω	P_11.1.61
Turn ON time (Slew Rate 3)	t_{ON_SR3}	7.8	-	36	µs	HS_ON=1 to 80% of V_S; C_L=1nF; R_L=300Ω	P_11.1.62
Turn OFF time (Slew Rate 3)	t_{OFF_SR3}	18	-	64	µs	HS_ON=0 to 20% of V_S; C_L=1nF; R_L=300Ω	P_11.1.63

Table 68 Overcurrent detection

V_S = 5.5 V to 28 V, T_j = -40°C to +150°C, all voltages with respect to ground, positive current flowing into pin (unless otherwise specified)

Parameter	Symbol	Values			Unit	Note or Test Condition	Number
		Min.	Typ.	Max.			
Overcurrent threshold 0,trimmed	I_{octh0}	26	40.5	56	mA	V_S=13.5V; HSx_OC_SEL=00	P_11.1.12
Overcurrent threshold 0 hysteresis	$I_{octh0,hyst}$	2.5	5	12	mA	[1] HSx_OC_SEL=00	P_11.1.13
Overcurrent threshold 1,trimmed	I_{octh1}	51	65	86	mA	V_S=13.5V; HSx_OC_SEL=01	P_11.1.14
Overcurrent threshold 1 hysteresis	$I_{octh1,hyst}$	4	8	17	mA	[1] HSx_OC_SEL=01	P_11.1.15
Overcurrent threshold 2,trimmed	I_{octh2}	101	134	180	mA	V_S=13.5V; HSx_OC_SEL=10	P_11.1.16
Overcurrent threshold 2 hysteresis	$I_{octh2,hyst}$	11	17	33	mA	[1] HSx_OC_SEL=10	P_11.1.17
Overcurrent threshold 3,trimmed	I_{octh3}	151	201	270	mA	V_S=13.5V; HSx_OC_SEL=11	P_11.1.18
Overcurrent threshold 3 hysteresis	$I_{octh3,hyst}$	22	35	67	mA	[1] HSx_OC_SEL=11	P_11.1.19
Overcurrent shutdown response time	t_{ocft}	8	-	80	µs	[1] HS_ON to OC_SD (including switch-on time); R_L=100Ω; V_S=13.5V	P_11.1.20

1) Not subject to production test, specified by design

Table 69 ON-state open load detection

V_S = 5.5 V to 28 V, T_j = -40°C to +150°C, all voltages with respect to ground, positive current flowing into pin (unless otherwise specified)

Parameter	Symbol	Values			Unit	Note or Test Condition	Number
		Min.	Typ.	Max.			
Open load threshold	I_{OLONth}	0.35	-	2.15	mA		P_11.1.21
Hysteresis	$I_{OLONhys}$	0.015	-	0.3	mA		P_11.1.22

Table 70 Cyclic sense mode

V_S = 5.5 V to 28 V, T_j = -40°C to +150°C, all voltages with respect to ground, positive current flowing into pin (unless otherwise specified)

Parameter	Symbol	Values			Unit	Note or Test Condition	Number
		Min.	Typ.	Max.			
Current capability	$I_{HS\ max\ sleep_pd}$	40	-	-	mA	Sleep Mode / Stop Mode Cyclic Operation	P_11.1.23
ON-State Resistance	$R_{ON,static}$	-	-	105	Ohm	Ids=40mA	P_11.1.24
Output Slew Rate (rising)	SR_{rise_cyc}	0.9	-	18	V/µs	20% to 80% of V_S; R_L=300Ω; V_s≤18V	P_11.1.25
Output Slew Rate (falling)	SR_{fal_cycl}	-34	-	-2.5	V/µs	80% to 20% of V_S; R_L=300Ω; V_s≤18V	P_11.1.26
Delay Time CYCLIC_ON-HS	t_{IN_cyc}	0.2	-	5.6	µs	ON=1 to 20% of V_S; R_L=300Ω; V_s≤18V	P_11.1.27
Turn-ON time	t_{ON_cyc}	1.5	-	15	µs	ON=1 to 80%; R_L=300Ω; V_s≤18V	P_11.1.28
Turn-OFF time	t_{OFF_cyc}	0.8	-	3.4	µs	ON=0 to 20% of V_S; R_L=300Ω; V_s≤18V	P_11.1.29

29.12 MOSFET Driver

29.12.1 Electrical Characteristics

Table 71 MOSFET Driver Output

V_S = 4.4 V to 28 V, V_{SD} = 5.4 V to 29 V, T_j = -40°C to +150°C, all voltages with respect to ground, positive current flowing into pin
(unless otherwise specified)

Parameter	Symbol	Values			Unit	Note or Test Condition	Number
		Min.	Typ.	Max.			
Gate charge current	I_{chg0}	3	7	12	mA	[1] C_L=10nF; I_{CHARGE}=0_D ; V_{GSx}≤$V_{GS(on)}$; V_{SD}≥7.4V	P_12.1.80
Gate charge current	I_{chg3}	8	15	23	mA	[1] C_L=10nF; I_{CHARGE}=3_D ; V_{GSx}≤$V_{GS(on)}$; V_{SD}≥7.4V	P_12.1.81
Gate charge current	I_{chg7}	16	26	36	mA	[1] C_L=10nF; I_{CHARGE}=7_D ; V_{GSx}≤$V_{GS(on)}$; V_{SD}≥7.4V	P_12.1.82
Gate charge current	I_{chg15}	38	53	68	mA	[1] C_L=10nF; I_{CHARGE}=15_D ; V_{GSx}≤$V_{GS(on)}$; V_{SD}≥7.4V	P_12.1.83
Gate charge current	I_{chg31}	96	125	154	mA	[1] C_L=10nF; I_{CHARGE}=31_D ; V_{GSx}≤$V_{GS(on)}$; V_{SD}≥7.4V	P_12.1.84
Gate charge current	I_{chg63}	260	320	380	mA	C_L=10nF; I_{CHARGE}=63_D ; V_{GSx}≤$V_{GS(on)}$; V_{SD}≥7.4V	P_12.1.44
Gate charge current dynamic average deviation	$\Delta I_{chg_avg_\%}$	-25 %	-	+25 %		[1] Reference: typ. I_{chgx}; C_L=10, 33nF; SR_{on_SHx}=165V/µs; V_{GSx}≤$V_{GS(on)}$	P_12.1.85
Gate discharge current	$I_{dischg0}$	3	7	12	mA	[1] C_L=10nF; $I_{DISCHARGE}$=0_D ; V_{GSx}≥$V_{GS(off)}$; V_{SD}≥7.4V	P_12.1.86
Gate discharge current	$I_{dischg3}$	8	15	23	mA	[1] C_L=10nF; $I_{DISCHARGE}$=3_D ; V_{GSx}≥$V_{GS(off)}$; V_{SD}≥7.4V	P_12.1.87
Gate discharge current	$I_{dischg7}$	16	26	36	mA	[1] C_L=10nF; $I_{DISCHARGE}$=7_D ; V_{GSx}≥$V_{GS(off)}$; V_{SD}≥7.4V	P_12.1.88
Gate discharge current	$I_{dischg15}$	38	53	68	mA	[1] C_L=10nF; $I_{DISCHARGE}$=15_D ; V_{GSx}≥$V_{GS(off)}$; V_{SD}≥7.4V	P_12.1.89
Gate discharge current	$I_{dischg31}$	96	125	154	mA	[1] C_L=10nF; $I_{DISCHARGE}$=31_D ; V_{GSx}≥$V_{GS(off)}$; V_{SD}≥7.4V	P_12.1.90
Gate discharge current	$I_{dischg63}$	260	320	380	mA	C_L=10nF;$I_{DISCHARGE}$=63_D ; V_{GSx}≥$V_{GS(off)}$; V_{SD}≥7.4V	P_12.1.45

Table 71 MOSFET Driver Output (cont'd)

V_S = 4.4 V to 28 V, V_{SD} = 5.4 V to 29 V, T_j = -40°C to +150°C, all voltages with respect to ground, positive current flowing into pin
(unless otherwise specified)

Parameter	Symbol	Values			Unit	Note or Test Condition	Number
		Min.	Typ.	Max.			
Gate discharge current dynamic average deviation	$\Delta I_{dischg_avg_\%}$	-28 %	-	+28 %		[1] Reference: typ. $I_{dischgx}$; C_L=10, 33nF; SR_{off_SHx}=165V/µs; $V_{GSx} \geq V_{GS(off)}$; $V_{SD} \geq$7.4V	P_12.1.91
High level output voltage Gxx vs. Sxx	V_{Gxx1}	10	-	12	V	[2] all other Drivers enabled but not ON; C_L=10nF; I_{CP}=6mA; $V_{SD} \geq$7.4V	P_12.1.3
High level output voltage GHx vs. SHx	V_{Gxx2}	8	-	-	V	[2] [1] all other Drivers enabled but not ON; C_L=10nF; I_{CP}=6mA; V_{SD}=6.4V	P_12.1.4
High level output voltage GHx vs. SHx	V_{Gxx3}	7	-	-	V	[2] all other Drivers enabled but not ON; C_L=10nF; $I_{CHARGE} \leq 31_D$; I_{CP}=6mA; V_{SD}=5.4V	P_12.1.5
High level output voltage GLx vs. GND	V_{Gxx6}	8	-	-	V	[2] [1] all other Drivers enabled but not ON; C_L=10nF; I_{CP}=6mA; V_{SD}=6.4V	P_12.1.6
High level output voltage GLx vs. GND	V_{Gxx7}	7	-	-	V	[2] all other Drivers enabled but not ON; C_L=10nF; I_{CP}=6mA; V_{SD}=5.4V	P_12.1.7
High level output voltage GLx vs. GND / GHx vs. SHx - Brake Mode	V_{Gxx_BM}	7	-	-	V	all other Drivers enabled but not ON; C_L=10nF; R_{GS}=100kΩ; V_{SD}=5.4V	P_12.1.66
High level output voltage GLx vs. GND - Hold Mode	V_{Gxx_HM}	2.5	-	7.1	V	; C_L=10nF; R_{GS}=100kΩ; $V_{SD} \geq$5.4V	P_12.1.67
		4.2	-	7.4	V	[1] ; C_L=10nF; R_{GS}=100kΩ; $V_{SD} \geq$7.4V	P_12.1.102
External MOSFET gate-to-source voltage - MOSFET on	$V_{GS(on)}$	5	-	-	V	[1] V_{SD}=5.4V	P_12.1.103
		7	-	-	V	[1] V_{SD}=7.4V	P_12.1.95
External MOSFET gate-to-source voltage - MOSFET off	$V_{GS(off)}$	-	-	2	V	[1] $I_{DISCHARGE} < 31_D$	P_12.1.104
		-	-	3.5	V	[1] $I_{DISCHARGE} \geq 31_D$	P_12.1.96

Table 71 MOSFET Driver Output (cont'd)

V_S = 4.4 V to 28 V, V_{SD} = 5.4 V to 29 V, T_j = -40°C to +150°C, all voltages with respect to ground, positive current flowing into pin
(unless otherwise specified)

Parameter	Symbol	Values			Unit	Note or Test Condition	Number
		Min.	Typ.	Max.			
Rise time	t_{rise3_3nf}	65	100	130	ns	[1] 25-75% of V_{Gxx1}; C_L=3.3nF; I_{CHARGE}=max ; $I_{DISCHARGE}$=max ; V_{SD}≥7.4V	P_12.1.8
Fall time	t_{fall3_3nf}	65	100	130	ns	[1] 75-25% of V_{Gxx1}; C_L=3.3nF; I_{CHARGE}=max ; $I_{DISCHARGE}$=max ; V_{SD}≥7.4V	P_12.1.9
Rise time	$t_{risemax}$	100	250	450	ns	25-75% of V_{Gxx1}; C_L=10nF; I_{CHARGE}=max ; $I_{DISCHARGE}$=max ; V_{SD}≥7.4V	P_12.1.57
Fall time	$t_{fallmax}$	100	250	450	ns	75-25% of V_{Gxx1}; C_L=10nF; I_{CHARGE}=max ; $I_{DISCHARGE}$=max ; V_{SD}≥7.4V	P_12.1.58
Rise time	$t_{risemin}$	4	-	15	µs	[1] 25-75% of V_{Gxx1}; C_L=10nF; I_{CHARGE}=min ; $I_{DISCHARGE}$=min ; V_{SD}≥7.4V	P_12.1.14
Fall time	$t_{fallmin}$	3.5	-	12	µs	[1] 75-25% of V_{Gxx1}; C_L=10nF; I_{CHARGE}=min ; $I_{DISCHARGE}$=min ; V_{SD}≥7.4V	P_12.1.15
Absolute rise - fall time difference for all LSx	$t_{r_f(diff)LSx}$	-	-	100	ns	25-75% of V_{Gxx1}; C_L=10nF; I_{CHARGE}=max ; $I_{DISCHARGE}$=max ; V_{SD}≥7.4V	P_12.1.35
Absolute rise - fall time difference for all HSx	$t_{r_f(diff)HSx}$	-	-	100	ns	25-75% of V_{Gxx1}; C_L=10nF; I_{CHARGE}=max ; $I_{DISCHARGE}$=max ; V_{SD}≥7.4V	P_12.1.36
Resistor between GHx/GLx and GND	R_{GGND}	30	40	50	kOhm		P_12.1.11

Table 71 MOSFET Driver Output (cont'd)

V_S = 4.4 V to 28 V, V_{SD} = 5.4 V to 29 V, T_j = -40°C to +150°C, all voltages with respect to ground, positive current flowing into pin
(unless otherwise specified)

Parameter	Symbol	Values			Unit	Note or Test Condition	Number
		Min.	Typ.	Max.			
Resistor between SHx and GND	R_{SHGN}	30	40	50	kOhm	[3] This resistance is the resistance between GHx and GND connected through a diode to SHx. As a consequence the voltage at SHx can rise up to 0,6V typ. before it gets discharged through the resistor.	P_12.1.10
Effective dischargeRDSON	R_{ONCCP}	-	9	12	Ohm	50mA forced into Gx, Sx grounded; $I_{DISCHARGE}$=63_D ; V_{VCP}=V_{VSD} +14.0V; V_{VSD}=13.5V	P_12.1.50
Input propagation time (LS on)	$t_{P(ILN)min}$	-	3	8	µs	[1] "ON"=1 to 25% of V_{Gxx1}; C_L=10nF; I_{CHARGE}=min	P_12.1.37
Input propagation time (LS off)	$t_{P(ILF)min}$	-	3	8	µs	[1] "ON"=0 to 75% of V_{Gxx1}; C_L=10nF; $I_{DISCHARGE}$=min	P_12.1.38
Input propagation time (HS on)	$t_{P(IHN)min}$	-	3	8	µs	[1] "ON"=1 to 25% of V_{Gxx1}; C_L=10nF; I_{CHARGE}=min	P_12.1.39
Input propagation time (HS off)	$t_{P(IHF)min}$	-	3	8	µs	[1] "ON"=0 to 75% of V_{Gxx1}; C_L=10nF; $I_{DISCHARGE}$=min	P_12.1.40
Input propagation time (LS on)	$t_{P(ILN)max}$	-	200	350	ns	"ON"=1 to 25% of V_{Gxx1}; C_L=10nF; I_{CHARGE}=max	P_12.1.26
Input propagation time (LS off)	$t_{P(ILF)max}$	-	200	300	ns	"ON"=0 to 75% of V_{Gxx1}; C_L=10nF; $I_{DISCHARGE}$=max	P_12.1.27
Input propagation time (HS on)	$t_{P(IHN)max}$	-	200	350	ns	"ON"=1 to 25% of V_{Gxx1}; C_L=10nF; I_{CHARGE}=max	P_12.1.28
Input propagation time (HS off)	$t_{P(IHF)max}$	-	200	300	ns	"ON"=0 to 75% of V_{Gxx1}; C_L=10nF; $I_{DISCHARGE}$=max	P_12.1.29

Table 71 MOSFET Driver Output (cont'd)

V_S = 4.4 V to 28 V, V_{SD} = 5.4 V to 29 V, T_j = -40°C to +150°C, all voltages with respect to ground, positive current flowing into pin
(unless otherwise specified)

Parameter	Symbol	Values			Unit	Note or Test Condition	Number
		Min.	Typ.	Max.			
Absolute input propagation time difference between propagation times for all LSx (LSx on)	$t_{Pon(diff)LSx}$	-	-	100	ns	"ON"=1 to 25% of V_{Gxx1}; C_L=10nF; I_{CHARGE}=max	P_12.1.30
Absolute input propagation time difference between propagation times for all LSx (LSx off)	$t_{Poff(diff)LSx}$	-	-	100	ns	"ON"=0 to 75% of V_{Gxx1}; C_L=10nF; I_{CHARGE}=max	P_12.1.41
Absolute input propagation time difference between propagation times for all HSx (HSx on)	$t_{Pon(diff)HSx}$	-	-	100	ns	"ON"=1 to 25% of V_{Gxx1}; C_L=10nF; I_{CHARGE}=max	P_12.1.42
Absolute input propagation time difference between propagation times for all HSx (HSx off)	$t_{Poff(diff)HSx}$	-	-	100	ns	"ON"=0 to 75% of V_{Gxx1}; C_L=10nF; I_{CHARGE}=max	P_12.1.43

1) Not subject to production test, specified by design
2) The condition I_{CP} = 6 mA emulates H-Bridge Drive with 2 MOSFET switching at 25 kHz and C_L = 10 nF.
3) This resistance is connected through a diode between SHx and GHx to ground.

Table 72 Charge-Discharge Current Timing Characteristics

V_S = 4.4 V to 28 V, V_{SD} = 5.4 V to 29 V, T_j = -40°C to +150°C, all voltages with respect to ground, positive current flowing into pin
(unless otherwise specified)

Parameter	Symbol	Values			Unit	Note or Test Condition	Number
		Min.	Typ.	Max.			
Charge current delay time	$t_{dly(on)}$	-	35	90	ns	[1] from "ON"=1 to 20% of I_{chgx} (x=0...63); C_L=10nF	P_12.1.63
Charge current rise time	$t_{rise(on)}$	-	35	70	ns	[1] from 20% of I_{chgx} to $I_{chgx,min}$ (x=0...63); C_L=10nF	P_12.1.64
Gate Source Voltage Saturation Time	$t_{sat(on)}$	-	50	100	ns	[1] from V_{GS}=$V_{GS(on)}$ to $V_{Gxxy,min}$; C_L=10nF; I_{CHARGE}=63	P_12.1.68

Table 72 Charge-Discharge Current Timing Characteristics (cont'd)

V_S = 4.4 V to 28 V, V_{SD} = 5.4 V to 29 V, T_j = -40°C to +150°C, all voltages with respect to ground, positive current flowing into pin
(unless otherwise specified)

Parameter	Symbol	Values			Unit	Note or Test Condition	Number
		Min.	Typ.	Max.			
Charge current settling time - sequencer mode	$t_{set_chg(seq)}$	-	-	150	ns	2) 1) from any $I_{CHARGE(n)}$ to $I_{CHARGE(n+1)}$ = 0_D or 63_D; C_L=10nF	P_12.1.69
Discharge current settling time - sequencer mode	$t_{set_dischg(seq)}$	-	-	75	ns	3) 1) from any $I_{DISCHARGE(n)}$ to $I_{DISCHARGE(n+1)}$ = 0_D or 63_D; C_L=10nF	P_12.1.70
Discharge current delay time	$t_{dly(off)}$	-	25	80	ns	1) from "ON"=0 to 20% of $I_{dischgx}$ (x=0...63); C_L=10nF	P_12.1.71
Discharge current rise time	$t_{rise(off)}$	-	25	50	ns	1) from 20% of $I_{dischgx}$ to $I_{dischgx,min}$ (x=0...63); C_L=10nF	P_12.1.72

1) Not subject to production test, specified by design
2) $I_{CHARGE(n)}$ and $I_{CHARGE(n+1)}$ are consecutive gate charge current set points in sequencer mode.
3) $I_{DISCHARGE(n)}$ and $I_{DISCHARGE(n+1)}$ are consecutive gate discharge current set points in sequencer mode.

Table 73 Timing Measurement Comparators

V_S = 4.4 V to 28 V, V_{SD} = 5.4 V to 29 V, T_j = -40°C to +150°C, all voltages with respect to ground, positive current flowing into pin
(unless otherwise specified)

Parameter	Symbol	Values			Unit	Note or Test Condition	Number
		Min.	Typ.	Max.			
Low-side timing measurement comparator threshold	$V_{SH(low)}$	2	-	2.5	V		P_12.1.73
High-side timing measurement comparator threshold	$V_{SH(high)}$	V_{SD} - 2.5V	-	V_{SD} - 2V	V		P_12.1.74
Delay of low-side timing measurement comparator	$t_{cdly(low)}$	5	-	20	ns		P_12.1.75
Delay of high-side timing measurement comparator	$t_{cdly(high)}$	5	-	25	ns		P_12.1.76

Table 74 Drain source monitoring

V_S = 4.4 V to 28 V, V_{SD} = 5.4 V to 29 V, T_j = -40°C to +150°C, all voltages with respect to ground, positive current flowing into pin
(unless otherwise specified)

Parameter	Symbol	Values			Unit	Note or Test Condition	Number
		Min.	Typ.	Max.			
Drain source monitoring threshold	$V_{DSMONVTH}$	0.112	0.145	0.178	V	BDRV_CTRL3.DSMON VTH<2:0>=000_B	P_12.1.46
		0.229	0.27	0.311	V	BDRV_CTRL3.DSMON VTH<2:0>=001_B	P_12.1.105
		0.425	0.5	0.575	V	BDRV_CTRL3.DSMON VTH<2:0>=010_B	P_12.1.106
		0.637	0.75	0.863	V	BDRV_CTRL3.DSMON VTH<2:0>=011_B	P_12.1.107
		0.85	1.00	1.15	V	BDRV_CTRL3.DSMON VTH<2:0>=100_B	P_12.1.108
		1.06	1.25	1.44	V	BDRV_CTRL3.DSMON VTH<2:0>=101_B	P_12.1.109
		1.27	1.5	1.73	V	BDRV_CTRL3.DSMON VTH<2:0>=110_B	P_12.1.110
		1.48	1.75	2.02	V	BDRV_CTRL3.DSMON VTH<2:0>=111_B	P_12.1.111

Table 75 Open load diagnosis currents

V_S = 4.4 V to 28 V, V_{SD} = 5.4 V to 29 V, T_j = -40°C to +150°C, all voltages with respect to ground, positive current flowing into pin
(unless otherwise specified)

Parameter	Symbol	Values			Unit	Note or Test Condition	Number
		Min.	Typ.	Max.			
Pull-Up diagnosis current	I_{PUDiag}	-700	-	-300	µA	$I_{DISCHARGE}$=0 ; V_{SD}≥6.4V; V_{SHx}=5V; V_s≥5.4V	P_12.1.47
Pull-Down diagnosis current	I_{PDDiag}	800	-	1450	µA	$I_{DISCHARGE}$=0 ; V_{SD}≥6.4V; V_{SHx}=5V; V_s≥5.4V	P_12.1.48
Effective Pull-Down diagnosis current overdrive	I_{PDDiag_OD}	200	-	-	µA	$I_{DISCHARGE}$=0 ; V_{SD}≥6.4V; V_{SHx}=5V; V_s≥5.4V	P_12.1.100

Table 76 Charge pump

V_S = 4.4 V to 28 V, V_{SD} = 5.4 V to 29 V, T_j = -40°C to +150°C, all voltages with respect to ground, positive current flowing into pin
(unless otherwise specified)

Parameter	Symbol	Values			Unit	Note or Test Condition	Number
		Min.	Typ.	Max.			
Output voltage VCP vs. VSD	V_{CPmin1}	7.7	-	10.1	V	[1] Bridge Driver enabled but not ON; C_{CP1}=220nF; C_{CP2}=220nF; 100µA≤I_{CP}≤6mA; V_{VSD}=5.4V; f_{CP}=250kHz	P_12.1.53
Single-Stage Mode Output voltage VCP vs. VSD	$V_{CPsingle}$	10.5	-	12.5	V	[1] Bridge Driver enabled but not ON, Charge Pump in single-stage mode; C_{CP1}=220nF; C_{CP2}=220nF; 100µA≤I_{CP}≤6mA; V_{VSD}=13.5V; f_{CP}=250kHz	P_12.1.101
Regulated output voltage VCP vs. VSD	V_{CP}	11.8	14.8	16.8	V	[1] Bridge Driver enabled but not ON; C_{CP1}=220nF; C_{CP2}=220nF; I_{CP}=6mA; V_{SD}≥7.4V; f_{CP}=250kHz	P_12.1.49
Regulated output voltage VCP vs. VSD	V_{CP_9V}	7.4	9.4	11.4	V	[1] Bridge Driver enabled but not ON; C_{CP1}=220nF; C_{CP2}=220nF; I_{CP}=6mA; V_{SD}≥7.4V; f_{CP}=250kHz; VCP9V_SET=1	P_12.1.98
Turn ON Time	t_{ON_VCP}	27	-	90	µs	[2] [1] [3] from CPCLK_EN='1' to 25% of V_{CP}; C_{CP1}=220nF; C_{CP2}=220nF; C_{VCP}=470nF; V_{SD}≥7.4V; f_{CP}=250kHz	P_12.1.59
Rise time	t_{rise_VCP}	55	-	130	µs	[2] [1] [3] from 25% to 75% of V_{CP}; C_{CP1}=220nF; C_{CP2}=220nF; C_{VCP}=470nF; V_{SD}≥7.4V; f_{CP}=250kHz	P_12.1.60

1) Ichgx = 63d, Idischgx = 63d, BDRV_CTRL3.DSMONVTH<2:0>=111B
2) This time applies when bit DRV_CP_CLK_CTRL.CPCLK_EN is set
3) Not subject to production test, specified by design

29.13 Operational Amplifier

29.13.1 Electrical Characteristics

Table 77 Electrical Characteristics Operational Amplifier

V_S = 5.5 V to 28 V, T_j = -40°C to +150°C, all voltages with respect to ground, positive current flowing into pin (unless otherwise specified)

Parameter	Symbol	Values			Unit	Note or Test Condition	Number
		Min.	Typ.	Max.			
Differential gain (uncalibrated)	G	9.5	10	10.5		CSA_CTRL.CSA_GAIN<1:0>=00_B	P_13.1.6
		19	20	21		[1] CSA_CTRL.CSA_GAIN<1:0>=01_B	P_13.1.28
		38	40	42		[1] CSA_CTRL.CSA_GAIN<1:0>=10_B	P_13.1.29
		57	60	63		[1] CSA_CTRL.CSA_GAIN<1:0>=11_B	P_13.1.30
Differential input operating voltage range OP2 - OP1	V_{IX}	-1.5 / G	-	1.5 / G	V		P_13.1.1
Operating. common mode input voltage range (referred to GND (OP2 - GND) or (OP1 - GND)	V_{CM}	-2.0	-	2.0	V		P_13.1.2
Max. input voltage range (referred to GND) (OP2 - GND) or (OP1 - GND)	V_{IX_max}	-7.0	-	7.0	V	max. rating of operational amplifier inputs, where measurement is not done	P_13.1.3
Single ended output voltage range (linear range)	V_{OUT}	V_{zero} - 1.5	-	V_{zero} + 1.5	V	[2] [1]	P_13.1.4
Linearity error	E_{LIN}	-15	-	15	mV	maximum deviation from best fit straight line divided by max. value of differential output voltage range (0.5V - 3.5V); this parameter is determined at G = 40.	P_13.1.5

Table 77 Electrical Characteristics Operational Amplifier (cont'd)

V_S = 5.5 V to 28 V, T_j = -40°C to +150°C, all voltages with respect to ground, positive current flowing into pin (unless otherwise specified)

Parameter	Symbol	Values			Unit	Note or Test Condition	Number
		Min.	Typ.	Max.			
Gain drift	ΔG	-1	-	1	%	Gain drift after calibration at G = 40.	P_13.1.7
DC input voltage common mode rejection ratio	*DC- CMRR*	58	80	-	dB	CMRR (in dB)=-20*log (differential mode gain/ common mode gain); -2V≤V_{CMI}≤2V; V_{OP2}-V_{OP1}=0V; G=40	P_13.1.8
Settling time to 98%	T_{SET}	-	800	1400	ns	[1] derived from 80 - 20 % rise fall times for ±2V overload condition (3 Tau value of settling time constant)	P_13.1.9
Current Sense Amplifier Input Resistance @ OP1, OP2	$R_{in_OP1_OP2}$	1	1.25	1.5	kOhm	[1]	P_13.1.25

1) Not subject to production test, specified by design

2) Nominal V_{zero} = 2 V (derived from the bandgap voltage: V_{zero} = 1.652 * V_{BG})

30 Package Outlines

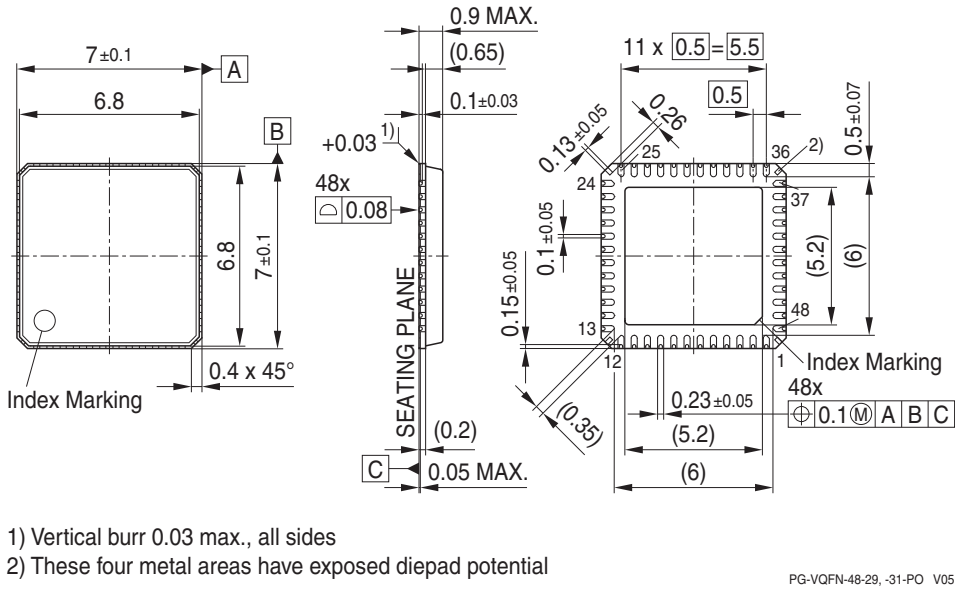

Figure 48 VQFN-48-31 (with LTI)

Green Product (RoHS compliant)

To meet the world-wide customer requirements for environmentally friendly products and to be compliant with government regulations the device is available as a green product. Green products are RoHS-Compliant (i.e Pb-free finish on leads and suitable for Pb-free soldering according to IPC/JEDEC J-STD-020).

For further information on alternative packages, please visit our website:
http://www.infineon.com/packages.

Dimensions in mm

31 Abbreviations

The following acronyms and terms are used within this document. List see in **Table 78**.

Table 78 Acronyms

Acronyms	Name
AHB	Arm® Advanced High-Performance Bus
CCU6	Capture Compare Unit 6
CGU	Clock Generation Unit
CLKMU	Clock Management Unit
CMU	Cyclic Management Unit
CSA	Current Sense Amplifier
DPP	Data Post Processing
ECC	Error Correction Code
EEPROM	Electrically Erasable Programmable Read Only Memory
GPIO	General Purpose Input Output
HV	High Voltage
ICU	Interrupt Control Unit
LDO	Low DropOut voltage regulator
LIN	Local Interconnect Network
LSB	Least Significant Bit
LTI	Lead Tip Inspection
LV	Low Voltage
MCU	Memory Control Unit
MF	Measurement Functions
MPU	Memory Protection Unit
MRST	Master Receive / Slave Transmit, corresponds to MISO in SPI
MSB	Most Significant Bit
MTSR	Master Transmit / Slave Receive, corresponds to MOSI in SPI
MU	Measurement Unit
NMI	Non Maskable Interrupt
NVIC	Nested Vector Interrupt Controller
OSC	Oscillator
OTP	One Time Programmable
PBA	Peripheral Bridge
PC	Program Counter
PCU	Power Control Unit
PD	Pull Down
PGU	Power supply Generation Unit
PMU	Power Management Unit

Abbreviations

Table 78 Acronyms

Acronyms	Name
PPB	Private Peripheral Bus
PSW	Program Status Word
PU	Pull Up
PWM	Pulse Width Modulation
RAM	Random Access Memory
RCU	Reset Control Unit
rfu	reserved for future use
RMU	Reset Management Unit
ROM	Read Only Memory
SCU	System Control Unit
SOW	Short Open Window (for WDT1)
SPI	Serial Peripheral Interface
SSC	Synchronous Serial Channel
SWD	Arm® Serial Wire Debug
TCCR	Temperature Compensation Control Register
TMS	Test Mode Select
TSD	Thermal Shut Down
UART	Universal Asynchronous Receiver Transmitter
VBG	Voltage reference Band Gap
WDT	Watchdog timer in SCU-DM (System Control Unit - Digital Modules)
WDT1	Watchdog timer in SCU-PM (System Control Unit - Power Modules)
WMU	Wake-up Management Unit
100TP	100 Times Programmable

32 Revision History

Revision	Date	Changes
Rev. 1.1	2023-03-20	
		All chapters Added trademark: MOTIX™
		Overview • Features – Up to 40 MHz: Deleted “up to” – Deleted “and PLL for clock generation” – Deleted “PLL loss-of-lock detection”
		Block Diagram • Figure “Block diagram TLE985xQX” – Deleted “+PLL”
		General Device Information • Figure “Pin Configuration VQFN-48”: – Deleted “XTAL1” and “XTAL2” • Pin Definitions and Functions, deleted: – P2.0, XTAL1, External oscillator input – P2.2, O, Hi-Z, XTAL2, External oscillator input – Footnote “configurable by user”
		Power Management Unit (PMU) • Table “Description of PMU Submodules” – “This clock is also used as backup clock for the system in case of PLL Clock failure and as independent clock source for WDT1”. Deleted: “backup clock for the system in case of PLL Clock failure and as”

Revision History

Revision	Date	Changes
		System Control Unit - Digital Modules (SCU-DM) • Chapter “Block Diagram”, figure “System Control Unit - Digital Modules Block Diagram” – Deleted “XTAL1” and “XTAL2”, changed CGU. • Chapter “Clock Generation Unit” – Changed from “The CGU in the TLE9853QX consists of one oscillator circuit (OSC_HP), a Phase-Locked Loop (PLL) module including an internal oscillator (OSC_PLL) and a Clock Control Unit (CCU). The CGU can convert a low-frequency input/external clock signal to a high-frequency internal clock.” to “The CGU in the TLE9853QX consists of an internal oscillator (f_{INTOSC}) and a Clock Control Unit (CCU).” – Deleted “PLL clock output f_{PLL}” – Deleted “Direct clock from oscillator OSC_HP f_{OSC}” • Chapter “High Precision Oscillator Circuit (OSC_HP)”: Deleted • Chapter "Clock Control Unit": – The Clock Control Unit (CCU) receives the clock from the PLL f_{PLL}, the external input clock f_{OSC}, the internal input clock f_{INTOSC}, or the low-precision input clock f_{LP_CLK}. Deleted: "PLL f_{PLL}, the external input clock f_{OSC}". – Figure "Clock Inputs to Clock Control Unit": Deleted "f_{PLL}" and "f_{OSC}". – "On wake-up from power-down mode, PCLK2 is restored similarly like NVMCLK, whereas PCLK is restored only after PLL is locked." Deleted: "whereas PCLK is restored only after PLL is locked". – Figure "Clock Generation from f_{sys}; CLKOUT Generation": Deleted "f_{PLL}" and "f_{OSC}".
		System Control Unit - Digital Modules (SCU-PM) • Chapter “Block Diagram” – “check of f_{sys} = system frequency: output of PLL”. Deleted “output of PLL”
		Interrupt System • Table “NMI Interrupt Table” – Deleted “PLL NMI, NMI, PLL loss of lock”.
		GPIO Ports and Peripheral I/O • Table “Port 2 Input Functions” – P2.0, deleted “IN, XTAL (in), XTAL, and footnote “configurable by user” – P2.2, deleted “OUT, XTAL (out), XTAL”, and footnote “configurable by user”
		LIN Transceiver • Chapter “Features” – “TxD Timeout Feature (optional, on by default)”, deleted: “(optional, on by default)”

Revision History

Revision	Date	Changes
		Application Information • Table "Recommendation for connecting unused pins", deleted – "P2/XTAL out, 40, open" – "P2/XTAL in, 41, GND"
		Electrical characteristic • P_1.3.18, Note or Test Condition – Deleted “PLL running” • Chapter “Electrical Characteristics Oscillators and PLL” – Deleted “and PLL” • P_3.1.1, Note or Test Condition – Deleted “and can be used in case the PLL fails”. • P_3.1.4 – Parameter: Changed from “Absolute accuracy” to “Frequency of internal oscillator” – Symbol: Changed from “$f_{TRIMABSA}$” to “f_{INTOSC}” – Values, Typ.: Added “40” • Deleted table “PLL (Clock Generation Unit Microcontroller)” – Deleted: P_3.1.25, P_3.1.21, P_3.1.6, P_3.1.23, P_3.1.7, P_3.1.24, P_3.1.8, P_3.1.10, P_3.1.11 • Deleted chapter “External Clock Parameters XTAL1, XTAL2” – Deleted: P_3.2.1, P_3.2.2, P_3.2.3, P_3.2.4, P_3.2.5, P_3.2.6, P_3.2.7, P_3.2.8, P_3.2.9, P_3.2.10, P_3.2.11, P_3.2.12, P_3.2.13 • P_8.1.33 added • P_8.1.50 added • P_8.1.34 added • P_8.1.51 added • P_9.2.11, Note or Test Condition: Added “$T_j \leq 150°C$”
		Abbreviations • Deleted “PLL, Phase Locked Loop” and “VCO, Voltage Controlled Oscillator”.
1.0	2019-07-26	Initial version for AD-Step

Trademarks
All referenced product or service names and trademarks are the property of their respective owners.

Edition 2023-03-20
Published by
Infineon Technologies AG
81726 Munich, Germany

© 2023 Infineon Technologies AG.
All Rights Reserved.

Do you have a question about any aspect of this document?
Email: erratum@infineon.com

Document reference
Z8F65189481

IMPORTANT NOTICE
The information given in this document shall in no event be regarded as a guarantee of conditions or characteristics ("Beschaffenheitsgarantie").
With respect to any examples, hints or any typical values stated herein and/or any information regarding the application of the product, Infineon Technologies hereby disclaims any and all warranties and liabilities of any kind, including without limitation warranties of non-infringement of intellectual property rights of any third party.
In addition, any information given in this document is subject to customer's compliance with its obligations stated in this document and any applicable legal requirements, norms and standards concerning customer's products and any use of the product of Infineon Technologies in customer's applications.
The data contained in this document is exclusively intended for technically trained staff. It is the responsibility of customer's technical departments to evaluate the suitability of the product for the intended application and the completeness of the product information given in this document with respect to such application.

For further information on technology, delivery terms and conditions and prices, please contact the nearest Infineon Technologies Office (**www.infineon.com**).

WARNINGS
Due to technical requirements products may contain dangerous substances. For information on the types in question please contact your nearest Infineon Technologies office.

Except as otherwise explicitly approved by Infineon Technologies in a written document signed by authorized representatives of Infineon Technologies, Infineon Technologies' products may not be used in any applications where a failure of the product or any consequences of the use thereof can reasonably be expected to result in personal injury.