英飞凌HybridPACK™ 1 模块

FS400R07A1E3

最终数据手册

V3.4, 2018-08-09

汽车高功率

1 特点/描述

英飞凌HybridPACK™ Drive 模块，带Trench/Fieldstop IGBT3和发射极控制第3代二极管

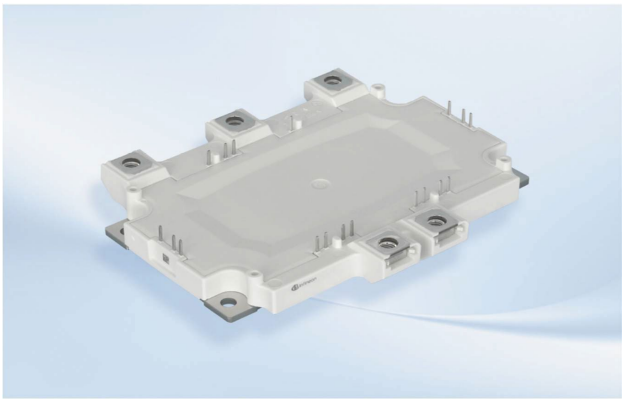

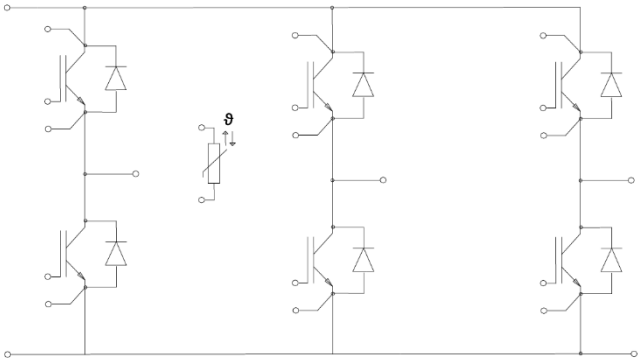

V_{CES} = 650V I_C
$_{nom}$ = 400A

典型应用

- 汽车应用
- 混合动力汽车
- 商业性农用车辆
- 电机驱动
- 针对带DC母线的汽车应用进行了优化
最高电压达420 V

电气特性

- 低开关损耗
- 低 V_{CEsat}
- $T_{vj\,op}$ = 150°C
- 具有正温度系数 的V_{CEsat}

机械特性

- 2.5kV AC 1分钟 绝缘
- 低热阻 Al_2O_3 基板
- 高机械坚固性
- 集成NTC温度传感器
- 铜底板
- 符合 RoHS 标准

描述

英飞凌®的HybridPACK™ 1是一款通过汽车认证的功率模块，专为电动汽车应用设计，功率范围可达20–30kW。该模块设计用于150°C的结温工作环境，采用三相六桥臂配置，包含Trench-Field-Stop IGBT3及配套的发射极控制二极管。

HybridPACK™ 1 功率模块基于英飞凌在 IGBT 功率模块开发方面的丰富经验，以及在新材料组合和装配技术方面的深入研究。HybridPACK™ 1 适用于风冷或液冷。铜底板与高性能陶瓷基板相结合，并采用英飞凌增强型线焊工艺，为轻度混合动力逆变器或发电机应用提供了无与伦比的热管理能力和功率循环能力，以及最高的可靠性。为了实现紧凑型设计，驱动电路PCB 可轻松焊接在模块顶部。所有电源连接均采用螺丝端子实现。

Product Name	Ordering Code
FS400R07A1E3	SP000663446

本数据手册的原文使用英文撰写。为方便起见，英飞凌提供了译文；由于翻译过程中可能使用了自动化工具，英飞凌不保证译文的准确性。 为确认准确性，请务必访问 infineon.com 参考最新的英文版本（控制文档）。

2 IGBT、逆变器

2.1 最大额定值

Parameter	Conditions	Symbol	Value	Unit
Collector-emitter voltage	T_{vj} = 25°C	V_{CES}	650	V
Continuous DC collector current	T_C = 65°C, $T_{vj\,max}$ = 175°C T_C = 25°C, $T_{vj\,max}$ = 175°C	$I_{C\,nom}$ I_C	400 500	A A
Repetitive peak collector current	t_P = 1 ms	I_{CRM}	800	A
Total power dissipation	T_C = 25°C, $T_{vj\,max}$ = 175°C	P_{tot}	1250	W
Gate-emitter peak voltage		V_{GES}	+/-20	V

2.2 特征值

			min.	typ.	max.	
Collector-emitter saturation voltage	I_C = 400 A, V_{GE} = 15 V I_C = 400 A, V_{GE} = 15 V I_C = 400 A, V_{GE} = 15 V	T_{vj} = 25°C T_{vj} = 125°C T_{vj} = 150°C	$V_{CE\,sat}$		1.45 1.60 1.70	1.90	V
Gate threshold voltage	I_C = 6.40 mA, V_{CE} = V_{GE}	T_{vj} = 25°C	V_{GEth}	4.90	5.80	6.50	V
Gate charge	V_{GE} = -15 V ... 15 V		Q_G		4.30		µC
Internal gate resistor		T_{vj} = 25°C	R_{Gint}		1.0		Ω
Input capacitance	f = 1 MHz, V_{CE} = 25 V, V_{GE} = 0 V	T_{vj} = 25°C	C_{ies}		26.0		nF
Reverse transfer capacitance	f = 1 MHz, V_{CE} = 25 V, V_{GE} = 0 V	T_{vj} = 25°C	C_{res}		0.76		nF
Collector-emitter cut-off current	V_{CE} = 650 V, V_{GE} = 0 V	T_{vj} = 25°C	I_{CES}			1.0	mA
Gate-emitter leakage current	V_{CE} = 0 V, V_{GE} = 20 V	T_{vj} = 25°C	I_{GES}			400	nA
Turn-on delay time, inductive load	I_C = 400 A, V_{CE} = 300 V V_{GE} = ±15 V R_{Gon} = 1.8 Ω	T_{vj} = 25°C T_{vj} = 125°C T_{vj} = 150°C	$t_{d\,on}$		0.10 0.11 0.12		µs
Rise time, inductive load	I_C = 400 A, V_{CE} = 300 V V_{GE} = ±15 V R_{Gon} = 1.8 Ω	T_{vj} = 25°C T_{vj} = 125°C T_{vj} = 150°C	t_r		0.08 0.08 0.08		µs
Turn-off delay time, inductive load	I_C = 400 A, V_{CE} = 300 V V_{GE} = ±15 V R_{Goff} = 1.8 Ω	T_{vj} = 25°C T_{vj} = 125°C T_{vj} = 150°C	$t_{d\,off}$		0.46 0.50 0.50		µs
Fall time, inductive load	I_C = 400 A, V_{CE} = 300 V V_{GE} = ±15 V R_{Goff} = 1.8 Ω	T_{vj} = 25°C T_{vj} = 125°C T_{vj} = 150°C	t_f		0.05 0.07 0.08		µs
Turn-on energy loss per pulse	I_C = 400 A, V_{CE} = 300 V, L_S = 25 nH V_{GE} = ±15 V, di/dt = 5500 A/µs (T_{vj} = 150°C) R_{Gon} = 1.8 Ω	T_{vj} = 25°C T_{vj} = 125°C T_{vj} = 150°C	E_{on}		2.90 4.20 4.50		mJ
Turn-off energy loss per pulse	I_C = 400 A, V_{CE} = 300 V, L_S = 25 nH V_{GE} = ±15 V, du/dt = 3000 V/µs (T_{vj} = 150°C) R_{Goff} = 1.8 Ω	T_{vj} = 25°C T_{vj} = 125°C T_{vj} = 150°C	E_{off}		13.0 16.0 17.0		mJ
SC data	V_{GE} ≤ 15 V, V_{CC} = 360 V V_{CEmax} = V_{CES} -L_{sCE} ·di/dt	t_P ≤ 8 µs, T_{vj} = 25°C t_P ≤ 6 µs, T_{vj} = 150°C	I_{SC}		2800 2000		A
Thermal resistance, junction to case	per IGBT		R_{thJC}			0.120	K/W
Thermal resistance, case to heatsink	per IGBT λ_{Paste} = 1 W/(m·K) / λ_{grease} = 1 W/(m·K)		R_{thCH}		0.080		K/W
Temperature under switching conditions	t_{op} continuous		$T_{vj\,op}$	-40		150	°C

3 二极管、逆变器

3.1 最大额定值

Parameter	Conditions	Symbol	Value	Unit
Repetitive peak reverse voltage	T_{vj} = 25°C	V_{RRM}	650	V
Continuous DC forward current		I_F	400	A
Repetitive peak forward current	t_P = 1 ms	I_{FRM}	800	A
I^2t - value	V_R = 0 V, t_P = 10 ms, T_{vj} = 125°C V_R = 0 V, t_P = 10 ms, T_{vj} = 150°C	I^2t	8800 8500	A^2s A^2s

3.2 特征值

				min.	typ.	max.	
Forward voltage	I_F = 400 A, V_{GE} = 0 V I_F = 400 A, V_{GE} = 0 V I_F = 400 A, V_{GE} = 0 V	T_{vj} = 25°C T_{vj} = 125°C T_{vj} = 150°C	V_F		1.55 1.50 1.45	1.95	V
Peak reverse recovery current	I_F = 400 A, - di_F/dt = 5500 A/µs (T_{vj} = 150°C) V_R = 300 V V_{GE} = -15 V	T_{vj} = 25°C T_{vj} = 125°C T_{vj} = 150°C	I_{RM}		210 280 300		A
Recovered charge	I_F = 400 A, - di_F/dt = 5500 A/µs (T_{vj} = 150°C) V_R = 300 V V_{GE} = -15 V	T_{vj} = 25°C T_{vj} = 125°C T_{vj} = 150°C	Q_r		18.0 30.0 34.0		µC
Reverse recovery energy	I_F = 400 A, - di_F/dt = 5500 A/µs (T_{vj} = 150°C) V_R = 300 V V_{GE} = -15 V	T_{vj} = 25°C T_{vj} = 125°C T_{vj} = 150°C	E_{rec}		3.60 7.25 8.30		mJ
Thermal resistance, junction to case	per diode		R_{thJC}			0.200	K/W
Thermal resistance, case to heatsink	per diode λ_{Paste} = 1 W/(m·K) / λ_{grease} = 1 W/(m·K)		R_{thCH}		0.085		K/W
Temperature under switching conditions	t_{op} continuous		$T_{vj\,op}$	-40		150	°C

4 NTC-热敏电阻

Parameter	Conditions	Symbol	min.	typ.	max.	Unit
Rated resistance	T_C = 25°C	R_{25}		5.00		kΩ
Deviation of R100	T_C = 100°C, R_{100} = 493 Ω	ΔR/R	5		5	%
Power dissipation	T_C = 25°C	P_{25}			20.0	mW
B-value	$R_2 = R_{25} \exp [B_{25/50}(1/T_2 - 1/(298,15\ K))]$	$B_{25/50}$		3375		K
B-value	$R_2 = R_{25} \exp [B_{25/80}(1/T_2 - 1/(298,15\ K))]$	$B_{25/80}$		3411		K
B-value	$R_2 = R_{25} \exp [B_{25/100}(1/T_2 - 1/(298,15\ K))]$	$B_{25/100}$		3433		K

根据应用笔记标定

5 模块

Parameter	Conditions	Symbol	Value			Unit
Isolation test voltage	RMS, f = 50 Hz, t = 1 min.	V_{ISOL}		2.5		kV
Material of module baseplate				Cu		
Internal isolation	basic insulation (class 1, IEC 61140)			Al_2O_3		
Creepage distance	terminal to heatsink terminal to terminal	d_{Creep}		12.0 6.1		mm
Clearance	terminal to heatsink terminal to terminal	d_{Clear}		12.0 6.1		mm
Comperative tracking index		CTI		> 200		
			最小值	典型值	max.	
Stray inductance module		L_{sCE}		30		nH
Module lead resistance, terminals - chip	T_C = 25 °C, per switch	$R_{CC'+EE'}$		1.00		mΩ
Storage temperature		T_{stg}	-40		125	°C
Mounting torque for modul mounting	Screw M5 baseplate to heatsink	M	3.00		6.00	Nm
Terminal connection torque	Screw M6	M	3.0	-	6.0	Nm
Weight		G		485		g

直流集电极电流/二极管正向电流受电源端子限制。直流集电极电流/二极管正向电流受电源端子限制。

6 特性图

output characteristic IGBT,Inverter (typical)
$I_C = f(V_{CE})$
V_{GE} = 15 V

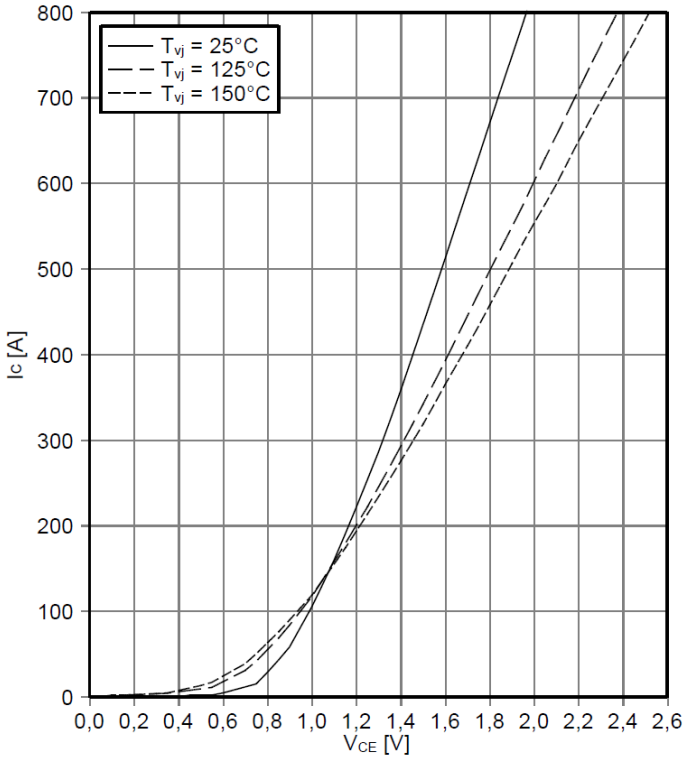

output characteristic IGBT,Inverter (typical)
$I_C = f(V_{CE})$
T_{vj} = 150°C

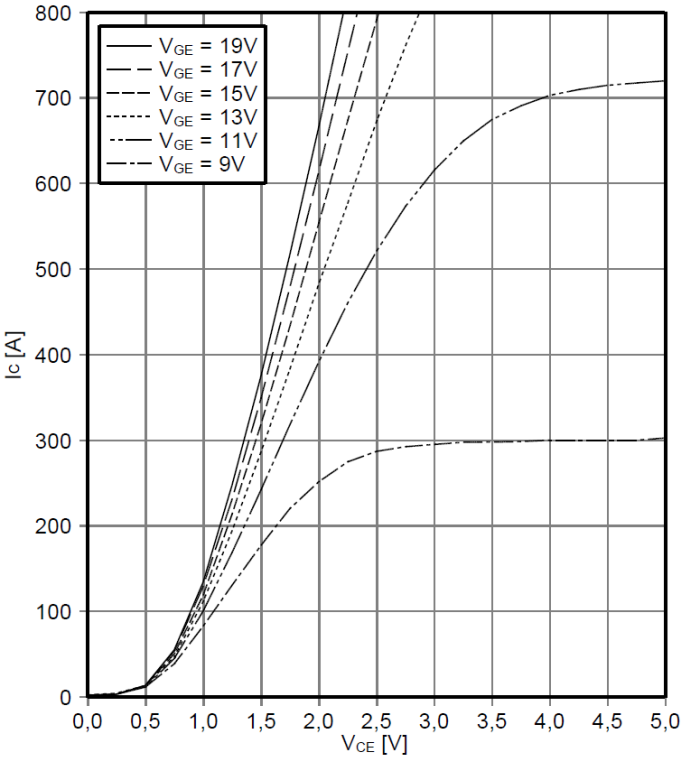

transfer characteristic IGBT,Inverter (typical)
$I_C = f(V_{GE})$
V_{CE} = 20 V

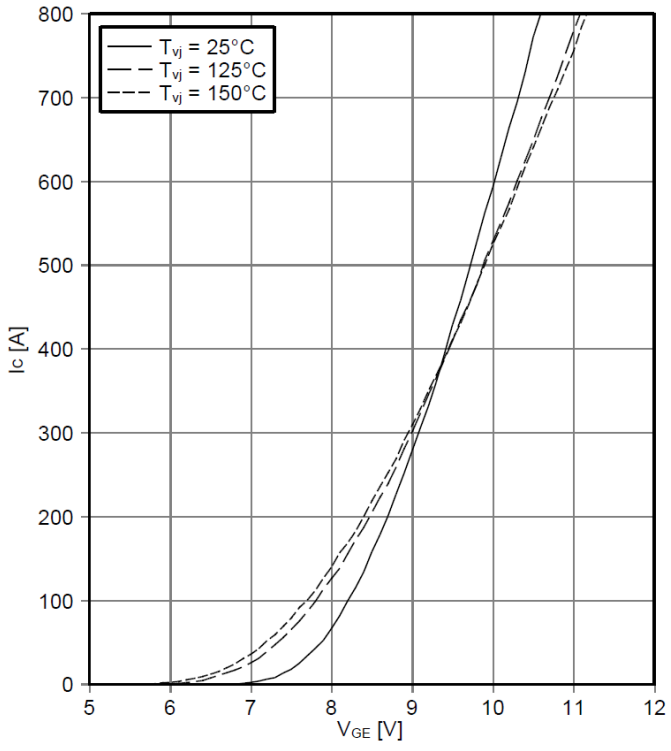

switching losses IGBT,Inverter (typical)
$E_{on} = f(I_C)$, $E_{off} = f(I_C)$
V_{GE} = ±15 V, R_{Gon} = 1.8 Ω, R_{Goff} = 1.8 Ω, V_{CE} = 300 V

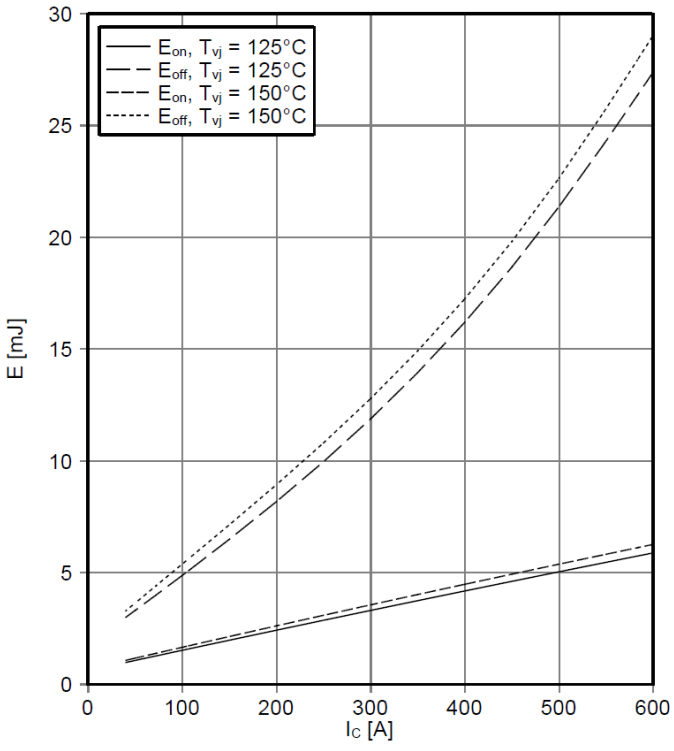

switching losses IGBT,Inverter (typical)
$E_{on} = f(R_G)$, $E_{off} = f(R_G)$
V_{GE} = ±15 V, I_C = 400 A, V_{CE} = 300 V

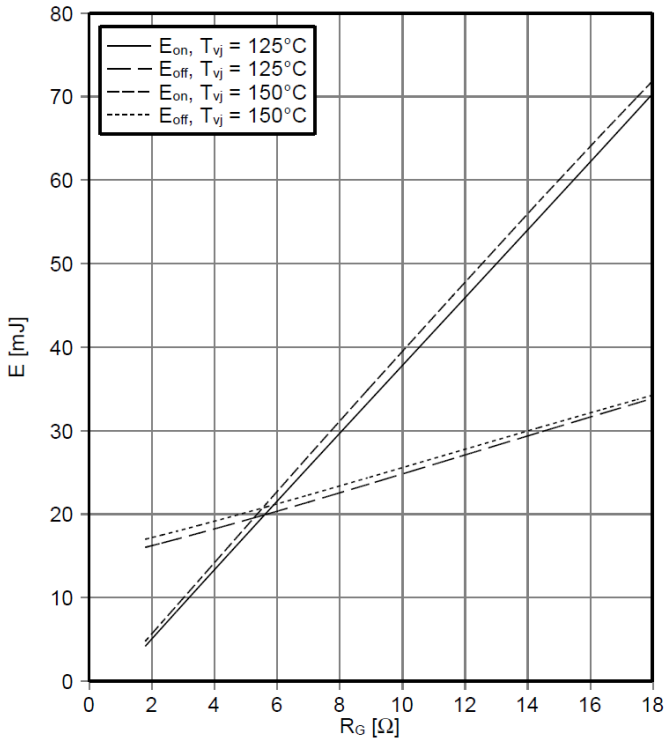

transient thermal impedance IGBT,Inverter
$Z_{thJC} = f(t)$

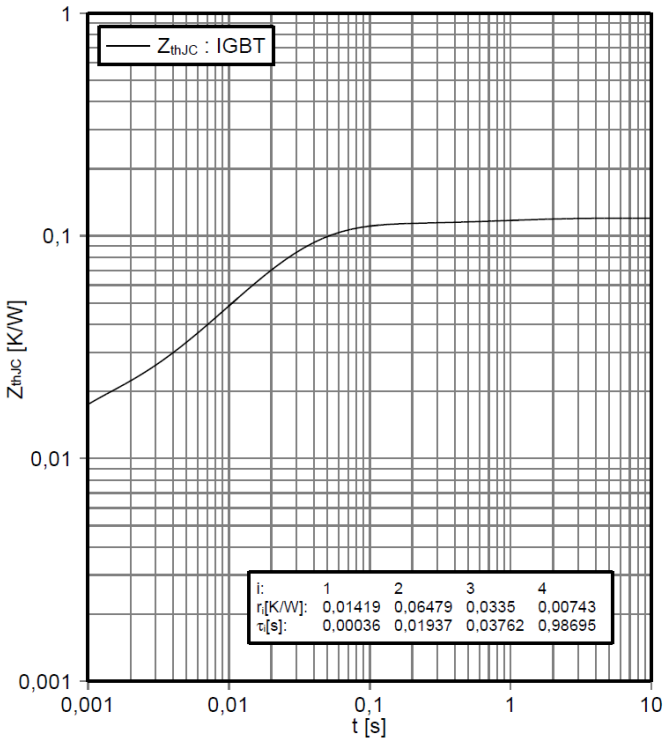

reverse bias safe operating area IGBT,Inverter (RBSOA)
$I_C = f(V_{CE})$
V_{GE} = ±15 V, R_{Goff} = 1.8 Ω, T_{vj} = 150°C

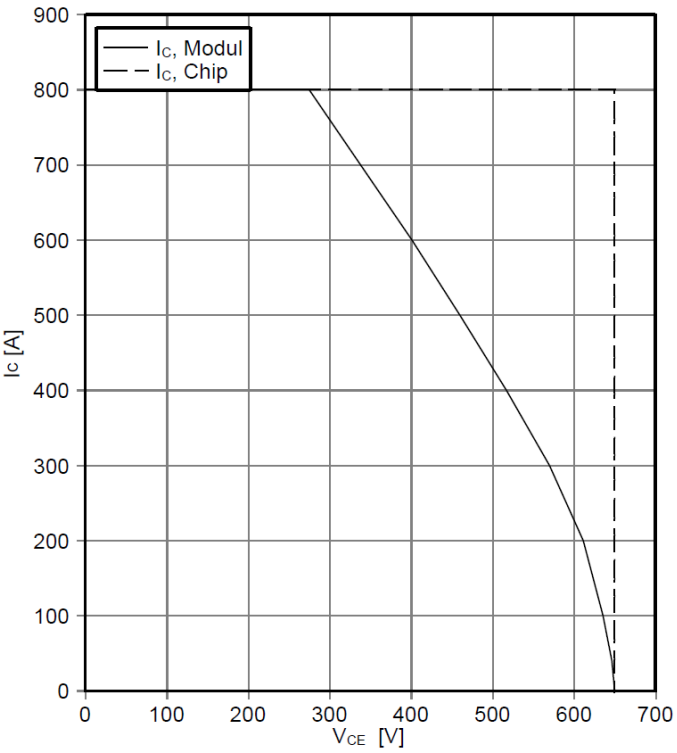

forward characteristic of Diode, Inverter (typical)
$I_F = f(V_F)$

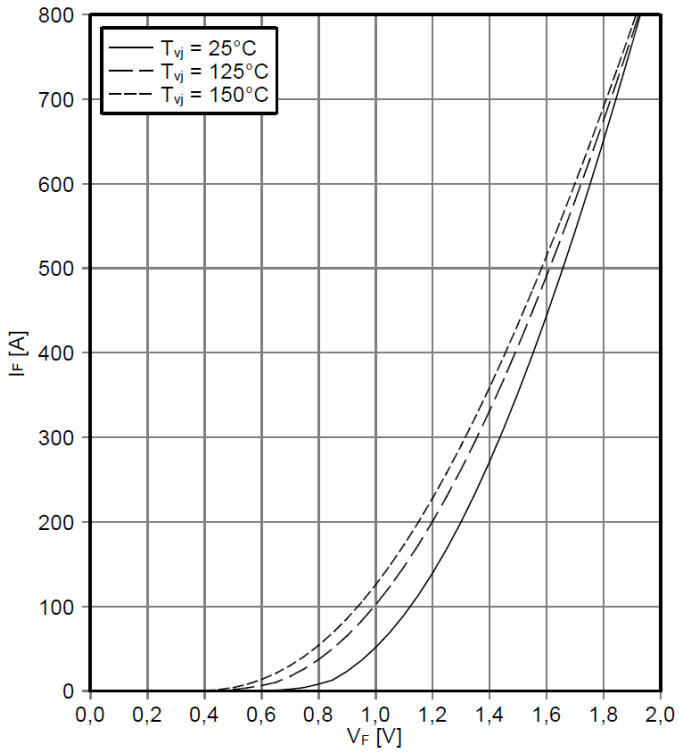

switching losses Diode, Inverter (typical)
$E_{rec} = f(I_F)$
$R_{Gon} = 1.8\ \Omega$, $V_{CE} = 300\ V$

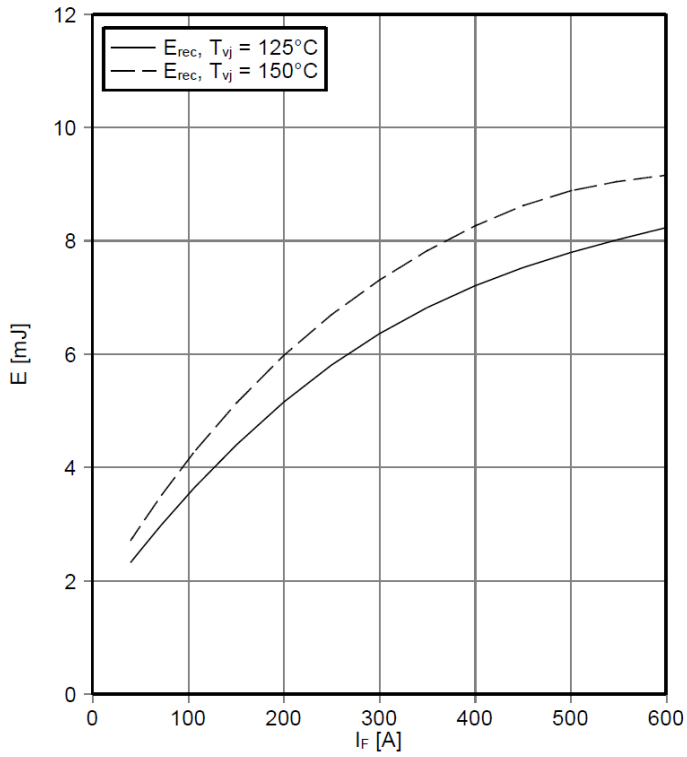

switching losses Diode, Inverter (typical)
$E_{rec} = f(R_G)$
$I_F = 400\ A$, $V_{CE} = 300\ V$

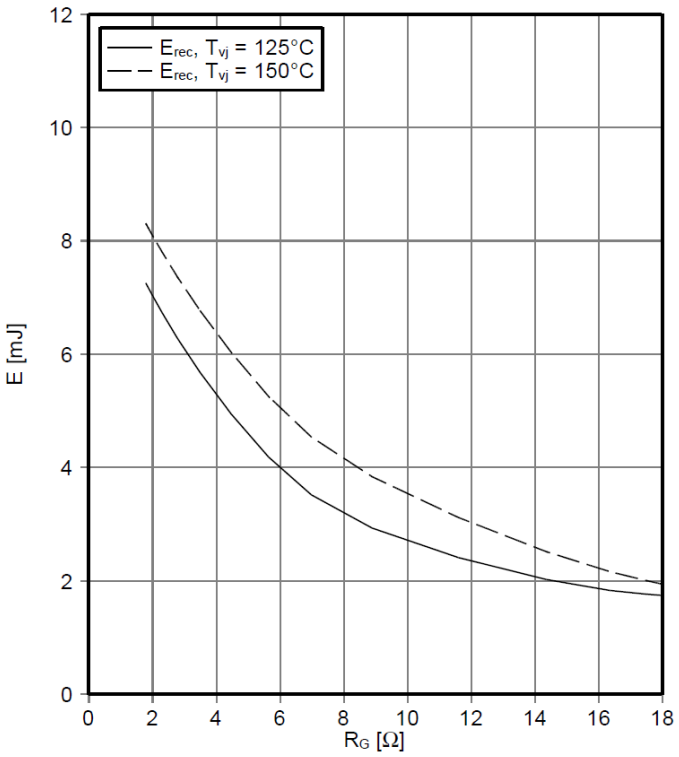

transient thermal impedance Diode, Inverter
$Z_{thJC} = f(t)$

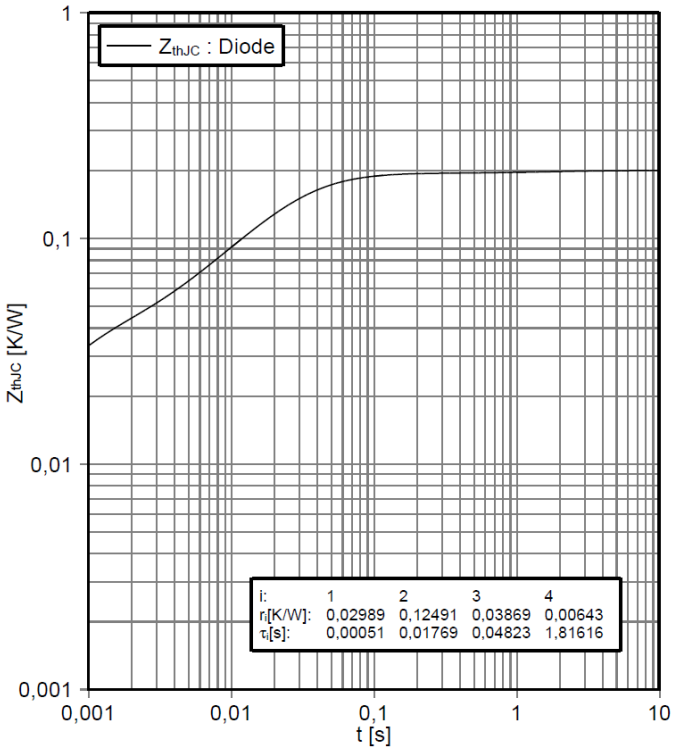

NTC-Thermistor-temperature characteristic (typical)
$R = f(T)$

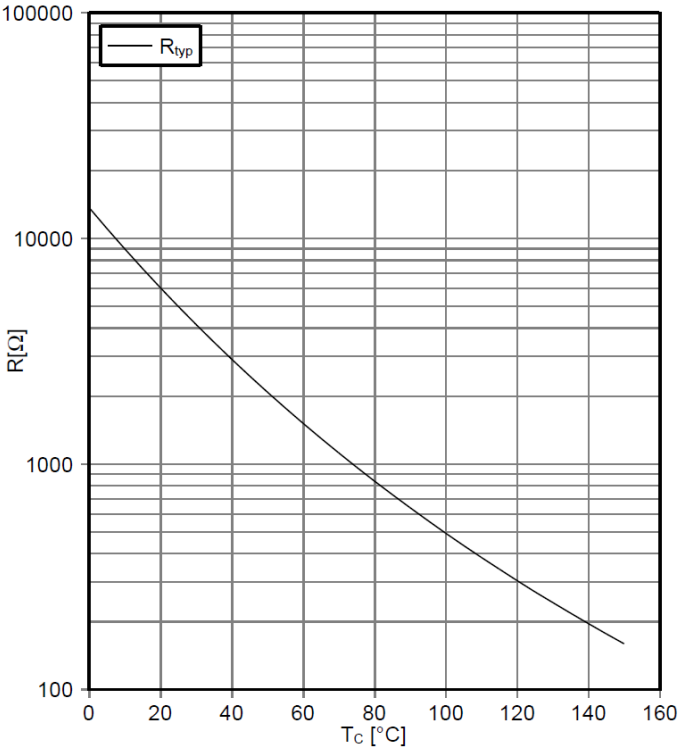

7 电路图

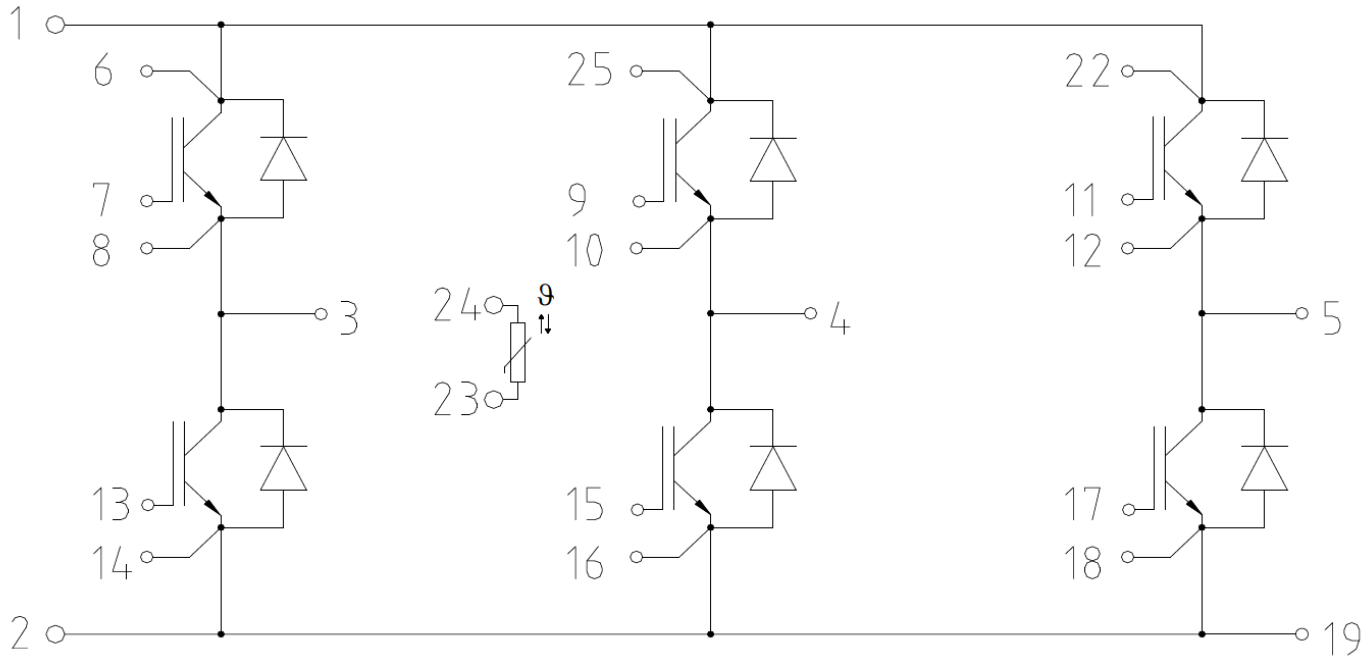

8 封装外形

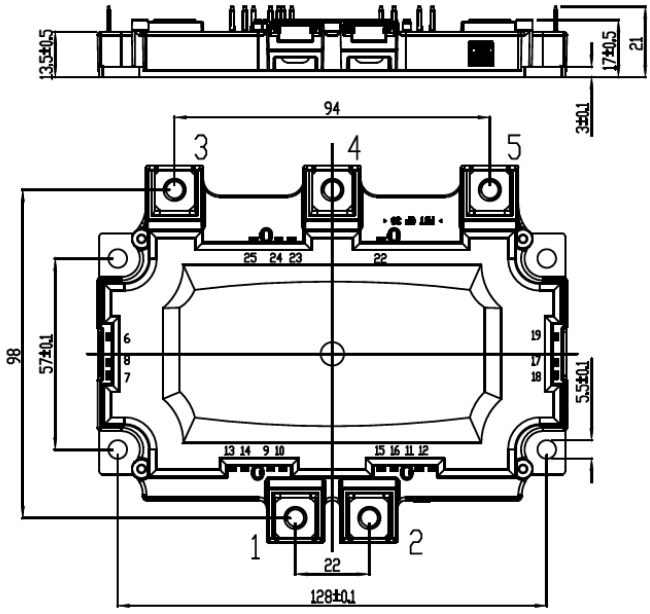
13,5±0,5
17±0,5
21
3±0,1
94
3
4
5
25 24 23
22
98
57±0,1
6
8
7
19
17
18
5,5±0,1
13 14 9 10
15 16 11 12
1
2
22
128±0,1

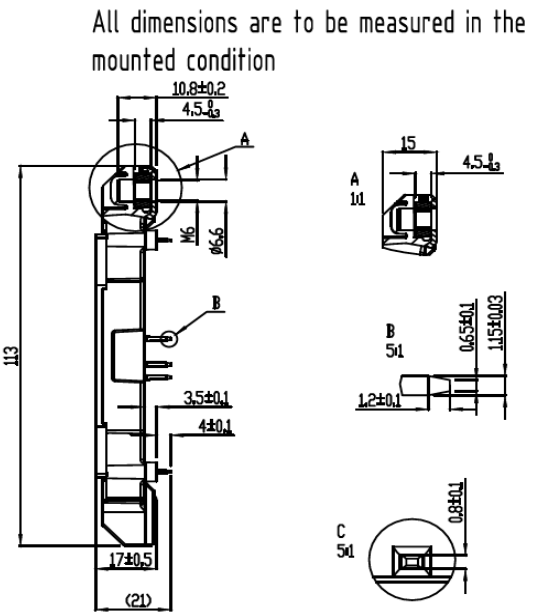
All dimensions are to be measured in the mounted condition
10,8±0,2
4,5
A
M6
ø6,6
B
113
3,5±0,1
4±0,1
17±0,5
(21)
15
4,5
A
1:1
B
5:1
0,65±0,1
1,15±0,03
1,2±0,1
C
5:1
0,8±0,1

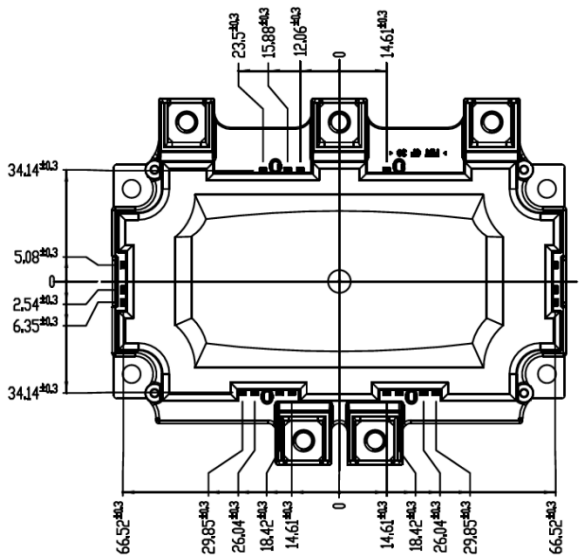
23,5±0,3
15,88±0,3
12,06±0,3
0
14,61±0,3
34,14±0,3
5,08±0,3
0
2,54±0,3
6,35±0,3
34,14±0,3
66,52±0,3
29,85±0,3
26,04±0,3
18,42±0,3
14,61±0,3
0
14,61±0,3
18,42±0,3
26,04±0,3
29,85±0,3
66,52±0,3

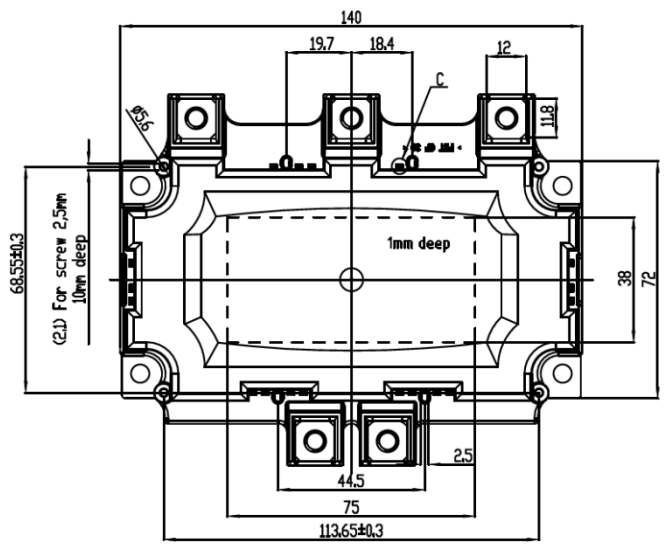
140
19,7
18,4
12
C
ø5,6
11,8
68,55±0,3
(2,1) For screw 2,5mm
10mm deep
1mm deep
38
72
2,5
44,5
75
113,65±0,3

9 标签代码

9.1 模块代码

Code Format	Data Matrix		
Encoding	ASCII Text		
Symbol Size	16x16		
Standard	IEC24720 and IEC16022		
Code Content	**Content** Module Serial Number Module Material Number Production Order Number Datecode (Production Year) Datecode (Production Week)	**Digit** 1 - 5 6 - 11 12 - 19 20 - 21 22 - 23	**Example (below)** 71549 142846 55054991 15 30
Example	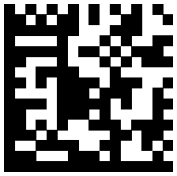 7154914284655054991530		

9.2 包装代码

Code Format	Code128			
Encoding	Code Set A			
Symbol Size	34 digits			
Standard	IEC8859-1			
Code Content	**Content** Backend Construction Number Production Lot Number Serial Number Date Code Box Quantity	**Identifier** X 1T S 9D Q	**Digit** 2 - 9 12 - 19 21 - 25 28 - 31 33 - 34	**Example (below)** 95056609 2X0003E0 754389 1139 15
Example	 X950566091T2X0003E0S754389D1139Q15			

修订记录

自上次修订以来的主要变化

修订记录

Reference	Date	Description
V1.0	2009-08-26	Initial Version
V1.1	2009-10-14	target data
V2.0	2009-11-19	preliminary data
V3.0	2010-04-21	final data
V3.1	2012-02-29	final data
V3.2	2016-11-08	new datasheet format
V3.3	2017-03-07	-
V3.4	2018-08-09	update of "Terms & Conditions of usage"

Terms & Conditions of usage

Edition 2018-08-01

Published by
Infineon Technologies AG 81726
Munich, Germany
© 2018 Infineon Technologies AG All Rights Reserved.

Legal Disclaimer
The information given in this document shall in no event be regarded as a guarantee of conditions or characteristics. With respect to any examples, hints or any typical values stated herein and/or any information regarding the application of the product, Infineon Technologies hereby disclaims any and all warranties and liabilities of any kind, including without limitation warranties of non-infringement of intellectual property rights of any third party.

Information
For further information on technology, delivery terms and conditions and prices, please contact the nearest Infineon Technologies Office (http://www.infineon.com)

Warnings
Due to technical requirements, components may contain dangerous substances. For information on the types in question, please contact the nearest Infineon Technologies Office.
These components are not designed for “special applications” that demand extremely high reliability or safety such as aerospace, defense or life support devices or systems (Class III medical devices). If you intend to use the components in any of these special applications, please contact your local representative at International Rectifier HiRel Products, Inc. or the Infineon support (https://www.infineon.com/support) to review product requirements and reliability testing.
Infineon Technologies components may be used in special applications only with the express written approval of Infineon Technologies. Class III medical devices are intended to be implanted in the human body or to support and/or maintain and sustain and/or protect human life. If they fail, it is reasonable to assume that the health of the user or other persons may be endangered.

Trademarks

Trademarks of Infineon Technologies AG

AURIX™, C166™, CanPAK™, CIPOS™, CIPURSE™, EconoPACK™, CoolMOS™, CoolSET™, CORECONTROL™, CROSSAVE™, DAVE™, DI-POL™, EasyPIM™, EconoBRIDGE™, EconoDUAL™, EconoPIM™, EconoPACK™, EiceDRIVER™, eupec™, FCOS™, HITFET™, HybridPACK™, I²RF™, ISOFACE™, IsoPACK™, MIPAQ™, ModSTACK™, my-d™, NovalithIC™, OptiMOS™, ORIGA™, POWERCODE™, PRIMARION™, PrimePACK™, PrimeSTACK™, PRO-SIL™, PROFET™, RASIC™, ReverSave™, SatRIC™, SIEGET™, SINDRION™, SIPMOS™, SmartLEWIS™, SOLID FLASH™, TEMPFET™, thinQ!™, TRENCHSTOP™, TriCore™.

Other Trademarks

Advance Design System™ (ADS) of Agilent Technologies, AMBA™, ARM™, MULTI-ICE™, KEIL™, PRIMECELL™, REALVIEW™, THUMB™, µVision™ of ARM Limited, UK. AUTOSAR™ is licensed by AUTOSAR development partnership. Bluetooth™ of Bluetooth SIG Inc. CAT-iq™ of DECT Forum.COLOSSUS™, FirstGPS™ of Trimble Navigation Ltd.EMV™ of EMVCo, LLC (Visa Holdings Inc.). EPCOS™ of Epcos AG.FLEXGO™ of Microsoft Corporation. FlexRay™ is licensed by FlexRay Consortium. HYPERTERMINAL™ of Hilgraeve Incorporated.IEC™ of Commission Electrotechnique Internationale.IrDA™ of Infrared Data Association Corporation. ISO™ of INTERNATIONAL ORGANIZATION FOR STANDARDIZATION. MATLAB™ of MathWorks, Inc. MAXIM™ of Maxim Integrated Products, Inc. MICROTEC™, NUCLEUS™ of Mentor Graphics Corporation. MIPI™ of MIPI Alliance, Inc. MIPS™ of MIPS Technologies, Inc., USA. muRata™ of MURATA MANUFACTURING CO., MICROWAVE OFFICE™ (MWO) of Applied Wave Research Inc., OmniVision™ of OmniVision Technologies, Inc. Openwave™ Openwave Systems Inc. RED HAT™ Red Hat, Inc. RFMD™ RF Micro Devices, Inc. SIRIUS™ of Sirius Satellite Radio Inc. SOLARIS™ of Sun Microsystems, Inc. SPANSION™ of Spansion LLC Ltd. Symbian™ of Symbian Software Limited. TAIYO YUDEN™ of Taiyo Yuden Co.
TEAKLITE™ of CEVA, Inc. TEKTRONIX™ of Tektronix Inc. TOKO™ of TOKO KABUSHIKI KAISHA TA. UNIX™ of X/Open Company Limited.VERILOG™, PALLADIUM™ of Cadence Design Systems, Inc. VLYNQ™ of Texas Instruments Incorporated.VXWORKS™, WIND RIVER™ of WIND RIVER SYSTEMS, INC.ZETEX™ of Diodes Zetex Limited.

Last update	2011-11-11

www.infineon.com

Published by Infineon Technologies AG

免责声明

请注意，本文件的原文使用英文撰写，为方便客户浏览英飞凌提供了中文译文。该中文译文仅供参考，并不可作为任何论点之依据。
由于翻译过程中可能使用了自动化程序，以及语言翻译和转换过程中的差异，最后的中文译文与最新的英文版本原文含义可能存在不尽相同之处。
因此，我们同时提供该中文译文版本的最新英文原文供您阅读，请参见 http://www.infineon.com
英文原文和中文译文版本之间若存有任何歧异，以最新的英文版本为准，并且仅认可英文版本为正式文件。
您如果使用本文件，即表示您同意并理解上述说明。英飞凌不对因翻译过程中可能存在的任何不完整或不准确信息而产生的任何直接或间接损失或损害负责。英飞凌不承担中文译文版本的完整性和准确性责任。如果您不同意上述说明，请不要使用本文件。

Trademarks
All referenced product or service names and trademarks are the property of their respective owners.

版本 **2026-09-25**

Infineon Technologies AG 出版，
德国 **Neubiberg 85579**

版权 © **2026 Infineon Technologies AG**
及其关联公司。
保留所有权利。

Do you have a question about this document?

Email:

erratum@infineon.com

重要通知

Infineon Technologies AG 及其关联公司（以下简称 "英飞凌"）销售或提供和交付的产品（可能也包括样品，且可能由硬件或软件或两者组成）（以下简称 "产品"），应遵守客户与英飞凌签订的框架供应合同或其他书面协议的条款和条件，如无上述合同或其他书面协议，则应遵守适用的英飞凌销售条件。只有在英飞凌明确书面同意的情况下，客户的一般条款和条件或对适用的英飞凌销售条件的偏离才对英飞凌具有约束力。

为避免疑义，英飞凌不承担不侵犯第三方权利的所有保证和默示保证，例如对特定用途/目的的适用性或适销性的保证。

英飞凌对与样品、应用或客户对任何产品的具体使用有关的任何信息或本文档中给出的任何示例或典型值概不负责。

本文件中包含的数据仅供具有技术资格和技能的客户代表使用。客户有责任评估产品对预期应用和客户特定用途的适用性，并在预期应用和客户特定用途中验证本文件中包含的所有相关技术数据。客户有责任正确设计、编程和测试预期应用的功能性和安全性，并遵守与其使用相关的法律要求。

除非英飞凌另行明确批准，否则产品不得用于任何因产品故障或使用产品的任何后果可合理预期会导致人身伤害的应用。但是，上述规定并不妨碍客户在英飞凌明确设计和销售的使用领域中使用任何产品，但是客户对应用负有全部责任。

英飞凌明确保留根据适用法律，如《德国版权法》（UrhG）第 44b 条，将其内容用于商业资料和数据探勘（TDM）的权利。

如果产品包含安全功能：
由于任何计算设备都不可能绝对安全，尽管产品采取了安全措施，但英飞凌不保证产品不会被入侵、数据不会被盗或遗失，或不会发生其他漏洞（以下简称"安全漏洞"），英飞凌对任何安全漏洞不承担任何责任。

如果本文档包含或引用软件：
根据美国、德国和世界其他国家的知识产权法律和条约，该软件归英飞凌所有。英飞凌保留所有权利。因此，您只能按照软件附带的软件授权协议的规定使用本软件。

如果没有适用的软件授权协议，英飞凌特此授予您个人的、非排他性的、不可转让的软件知识产权授权（无权转授权）：(a) 对于以源代码形式提供的软件，仅在贵组织内部修改和复制该软件用于英飞凌硬件产品；及 (b) 对于以二进制代码(binary code)形式对外向终端用户分发该软件，仅得用于英飞凌硬件产品。禁止对本软件进行任何其他使用、复制、修改、翻译或编译。有关产品、技术、交货条款和条件以及价格的详细信息，请联系离您最近的英飞凌办公室或访问 **https://www.infineon.com**。