HEXFET® Power MOSFET

Features

- Advanced Planar Technology
- Logic Level Gate Drive
- Low On-Resistance
- Dynamic dV/dT Rating
- 175°C Operating Temperature
- Fast Switching
- Fully Avalanche Rated
- Repetitive Avalanche Allowed up to Tjmax
- Lead-Free, RoHS Compliant
- Automotive Qualified *

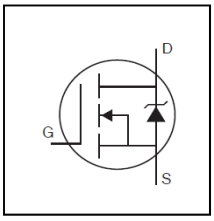

V_{DSS}		**30V**
$R_{DS(on)}$	**max.**	**45mΩ**
$I_{D\ (Silicon\ Limited)}$		**23A**
$I_{D\ (Package\ Limited)}$		**20A**

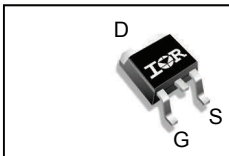

D-Pak
AUIRLR2703

G	D	S
Gate	Drain	Source

Description

Specifically designed for Automotive applications, this cellular design of HEXFET® Power MOSFETs utilizes the latest processing techniques to achieve low on-resistance per silicon area. This benefit combined with the fast switching speed and ruggedized device design that HEXFET power MOSFETs are well known for, provides the designer with an extremely efficient and reliable device for use in Automotive and a wide variety of other applications.

Base part number	Package Type	Standard Pack		Orderable Part Number
		Form	Quantity	
AUIRLR2703	D-Pak	Tube	75	AUIRLR2703
		Tape and Reel Left	3000	AUIRLR2703TRL

Absolute Maximum Ratings

Stresses beyond those listed under “Absolute Maximum Ratings” may cause permanent damage to the device. These are stress ratings only; and functional operation of the device at these or any other condition beyond those indicated in the specifications is not implied. Exposure to absolute-maximum-rated conditions for extended periods may affect device reliability. The thermal resistance and power dissipation ratings are measured under board mounted and still air conditions. Ambient temperature (TA) is 25°C, unless otherwise specified.

Symbol	Parameter	Max.	Units
I_D @ T_C = 25°C	Continuous Drain Current, V_{GS} @ 10V (Silicon Limited)	23	A
I_D @ T_C = 100°C	Continuous Drain Current, V_{GS} @ 10V (Silicon Limited)	16	
I_D @ T_C = 25°C	Continuous Drain Current, V_{GS} @ 10V (Package Limited)	20	
I_{DM}	Pulsed Drain Current ①	96	
P_D @T_C = 25°C	Maximum Power Dissipation	45	W
	Linear Derating Factor	0.30	W/°C
V_{GS}	Gate-to-Source Voltage	± 16	V
E_{AS}	Single Pulse Avalanche Energy (Thermally Limited) ②	77	mJ
$E_{AS\ (tested)}$	Single Pulse Avalanche Energy (tested Value) ⑥	200	
I_{AR}	Avalanche Current ①	14	A
E_{AR}	Repetitive Avalanche Energy ①	4.5	mJ
dv/dt	Peak Diode Recovery③	5.0	V/ns
T_J T_{STG}	Operating Junction and Storage Temperature Range	-55 to + 175	°C
	Soldering Temperature, for 10 seconds (1.6mm from case)	300	

Thermal Resistance

Symbol	Parameter	Typ.	Max.	Units
$R_{\theta JC}$	Junction-to-Case ⑧	–––	3.3	°C/W
$R_{\theta JA}$	Junction-to-Ambient (PCB Mount) ⑦	–––	50	
$R_{\theta JA}$	Junction-to-Ambient	–––	110	

HEXFET® is a registered trademark of Infineon.

*Qualification standards can be found at www.infineon.com

Static @ T_J = 25°C (unless otherwise specified)

	Parameter	Min.	Typ.	Max.	Units	Conditions
$V_{(BR)DSS}$	Drain-to-Source Breakdown Voltage	30	—	—	V	V_{GS} = 0V, I_D = 250µA
$\Delta V_{(BR)DSS}/\Delta T_J$	Breakdown Voltage Temp. Coefficient	—	0.030	—	V/°C	Reference to 25°C, I_D = 1mA
$R_{DS(on)}$	Static Drain-to-Source On-Resistance	—	—	0.045	Ω	V_{GS} = 10V, I_D = 14A ④
		—	—	0.065		V_{GS} = 4.5V, I_D = 12A ④
$V_{GS(th)}$	Gate Threshold Voltage	1.0	—	—	V	V_{DS} = V_{GS}, I_D = 250µA
gfs	Forward Trans conductance	6.4	—	—	S	V_{DS} = 25V, I_D = 14A ⑦
I_{DSS}	Drain-to-Source Leakage Current	—	—	25	µA	V_{DS} = 30V, V_{GS} = 0V
		—	—	250		V_{DS} = 24V,V_{GS} = 0V,T_J =150°C
I_{GSS}	Gate-to-Source Forward Leakage	—	—	100	nA	V_{GS} = 16V
	Gate-to-Source Reverse Leakage	—	—	-100		V_{GS} = - 16V

Dynamic Electrical Characteristics @ T_J = 25°C (unless otherwise specified)

Q_g	Total Gate Charge	—	—	15	nC	I_D = 14A
Q_{gs}	Gate-to-Source Charge	—	—	4.6		V_{DS} = 24V
Q_{gd}	Gate-to-Drain Charge	—	—	9.3		V_{GS} = 4.5V ④⑦
$t_{d(on)}$	Turn-On Delay Time	—	8.5	—	ns	V_{DD} = 15V
t_r	Rise Time	—	140	—		I_D = 14A
$t_{d(off)}$	Turn-Off Delay Time	—	12	—		R_G = 12Ω,V_{GS} = 4.5V
t_f	Fall Time	—	20	—		R_D = 1.1Ω ④⑦
L_D	Internal Drain Inductance	—	4.5	—	nH	Between lead, 6mm (0.25in.) from package and center of die contact 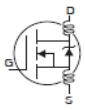
L_S	Internal Source Inductance	—	7.5	—		
C_{iss}	Input Capacitance	—	450	—	pF	V_{GS} = 0V
C_{oss}	Output Capacitance	—	210	—		V_{DS} = 25V
C_{rss}	Reverse Transfer Capacitance	—	110	—		f = 1.0MHz⑦

Diode Characteristics

	Parameter	Min.	Typ.	Max.	Units	Conditions
I_S	Continuous Source Current (Body Diode)	—	—	23⑤	A	MOSFET symbol showing the integral reverse p-n junction diode. 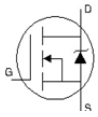
I_{SM}	Pulsed Source Current (Body Diode) ①	—	—	96		
V_{SD}	Diode Forward Voltage	—	—	1.3	V	T_J = 25°C,I_S = 14A, V_{GS} = 0V ④
t_{rr}	Reverse Recovery Time	—	65	97	ns	T_J = 25°C ,I_F = 14A
Q_{rr}	Reverse Recovery Charge	—	140	210	nC	di/dt = 100A/µs④⑦
t_{on}	Forward Turn-On Time	Intrinsic turn-on time is negligible (turn-on is dominated by L_S+L_D)				

Notes:

① Repetitive rating; pulse width limited by max. junction temperature. (See fig. 11)

② V_{DD} =15V,Starting T_J = 25°C, L = 570µH, R_G = 25Ω, I_{AS} = 14A (See fig. 12)

③ I_{SD} ≤ 14A, di/dt ≤ 140A/µs, V_{DD} ≤ $V_{(BR)DSS}$, T_J ≤ 175°C.

④ Pulse width ≤ 300µs; duty cycle ≤ 2%.

⑤ Calculated continuous current based on maximum allowable junction temperature. Package limitation current = 20A.

⑥ This is applied for I-PAK, LS of D-PAK is measured between lead and center of die contact.

⑦ Uses IRL2703 data and test conditions.

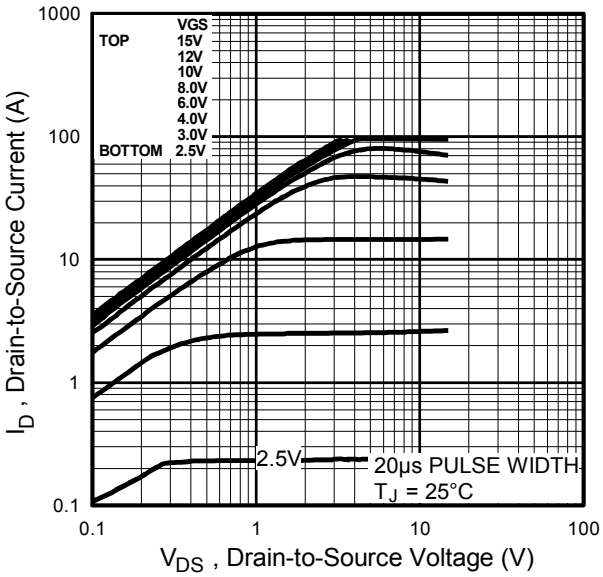

Fig. 1 Typical Output Characteristics

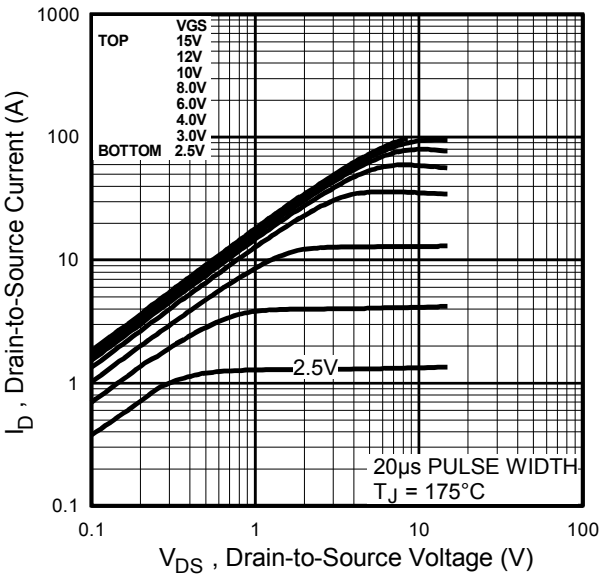

Fig. 2 Typical Output Characteristics

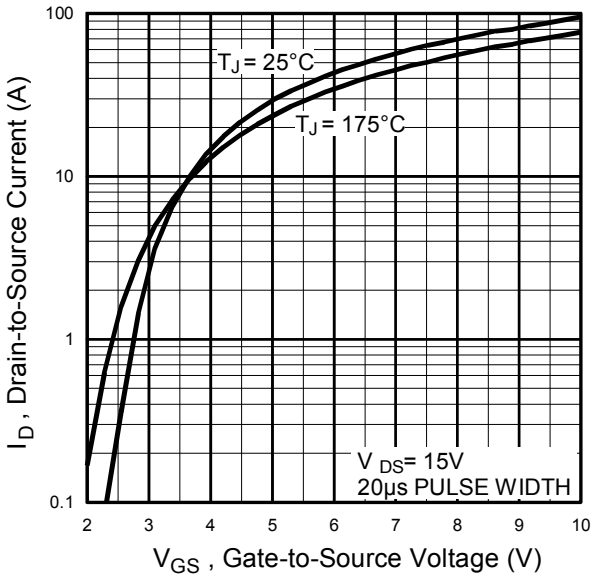

Fig. 3 Typical Transfer Characteristics

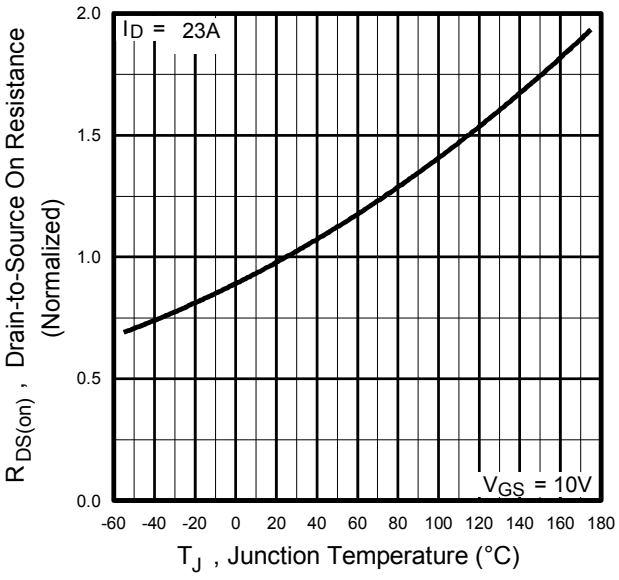

Fig. 4 Normalized On-Resistance Vs. Temperature

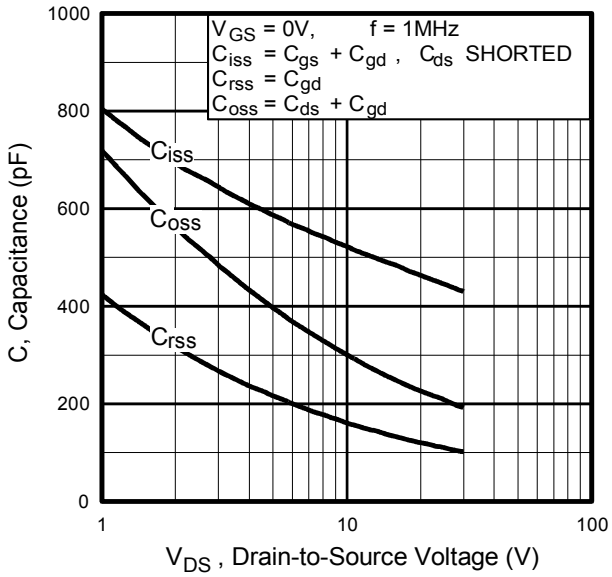

Fig 5. Typical Capacitance vs. Drain-to-Source Voltage

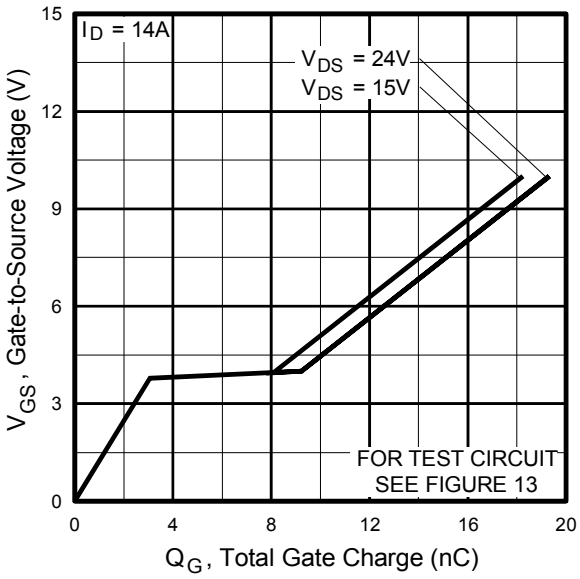

Fig 6. Typical Gate Charge vs. Gate-to-Source Voltage

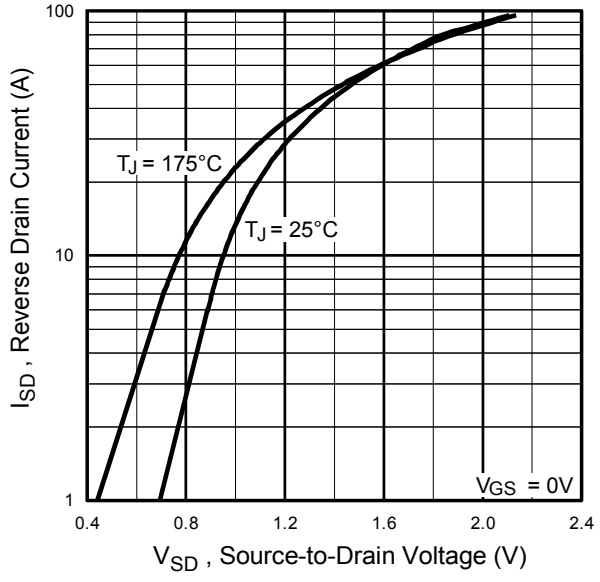

Fig. 7 Typical Source-to-Drain Diode Forward Voltage

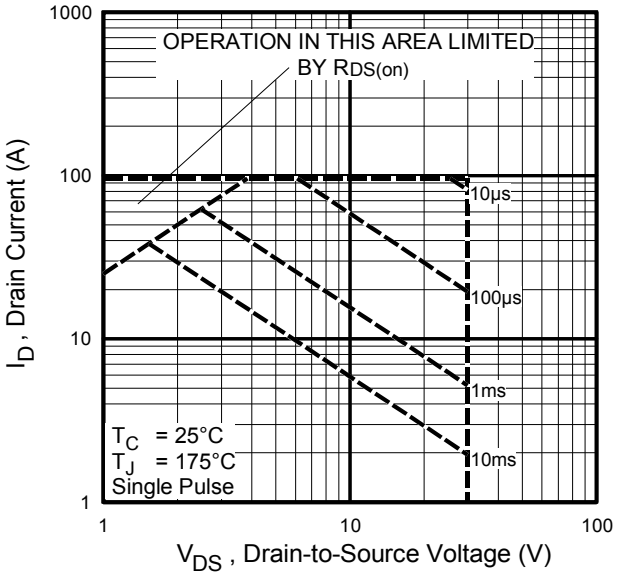

Fig 8. Maximum Safe Operating Area

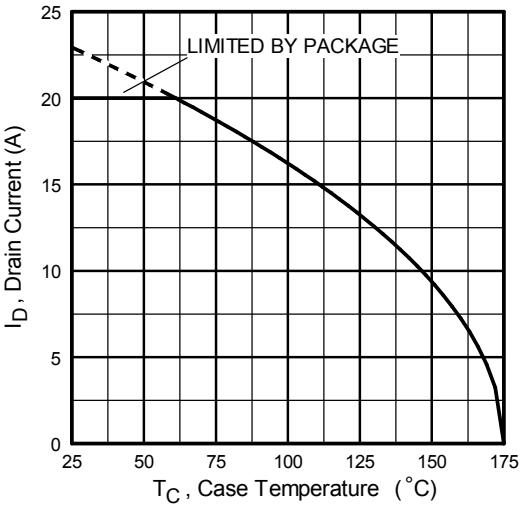

Fig 9. Maximum Drain Current Vs. Case Temperature

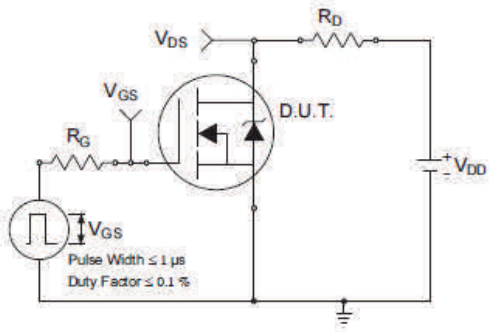

Fig 10a. Switching Time Test Circuit

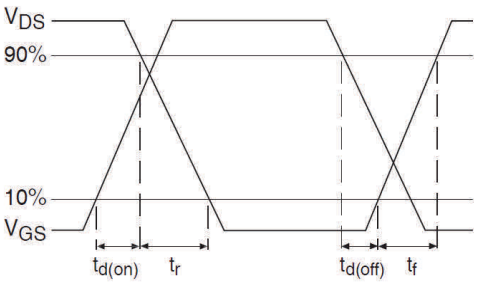

Fig 10b. Switching Time Waveforms

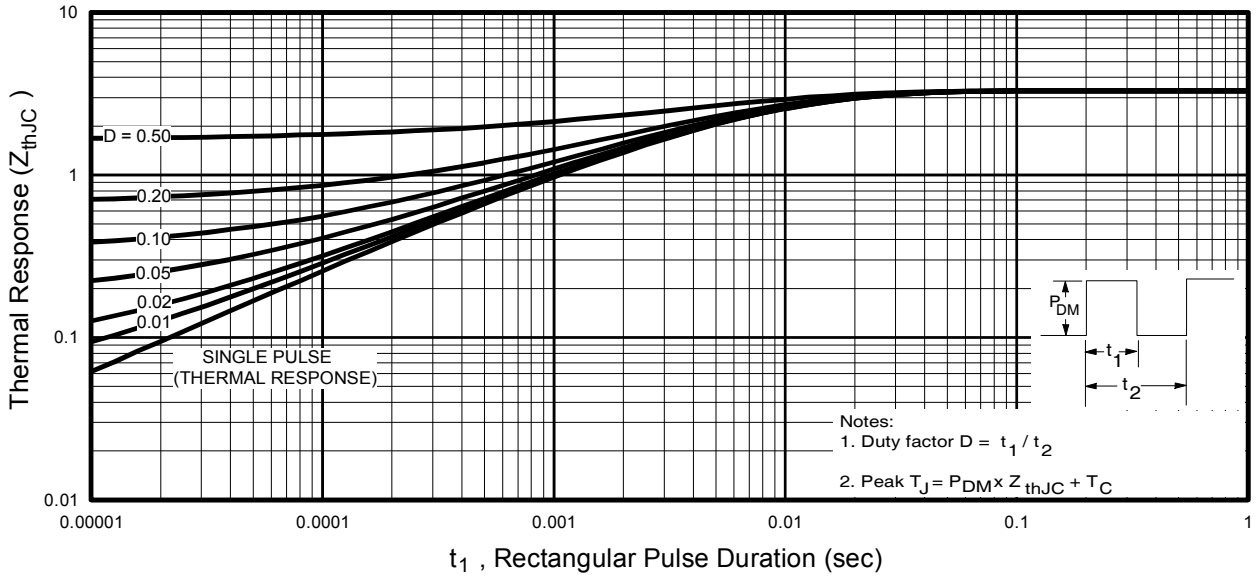

Fig 11. Maximum Effective Transient Thermal Impedance, Junction-to-Case

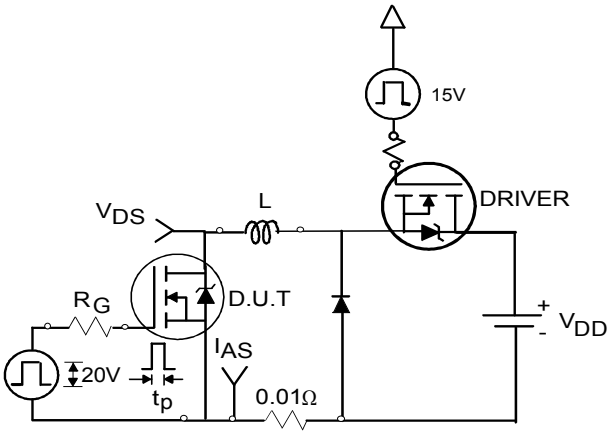

Fig 12a. Unclamped Inductive Test Circuit

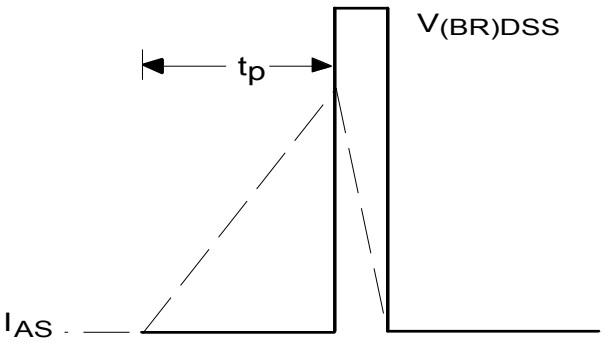

Fig 12b. Unclamped Inductive Waveforms

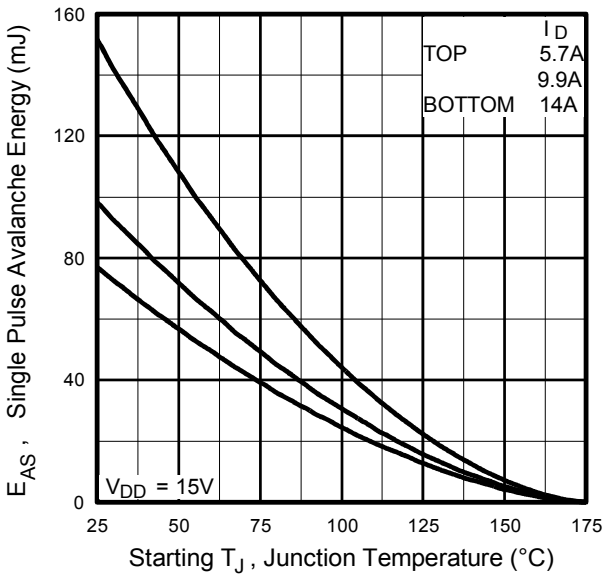

Fig 12c. Maximum Avalanche Energy vs. Drain Current

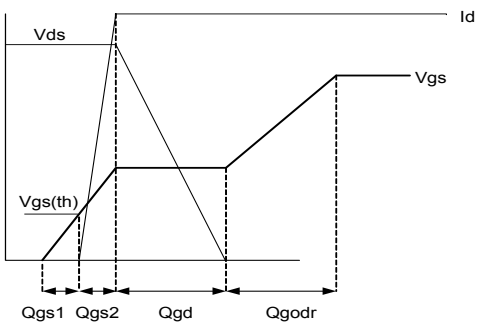

Fig 13a. Gate Charge Waveform

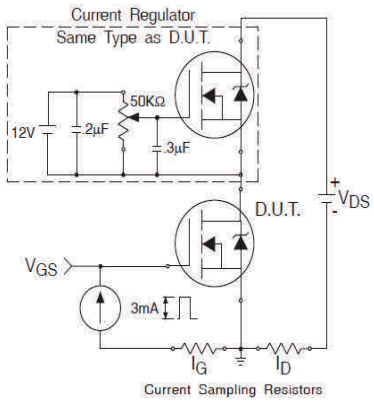

Fig 13b. Gate Charge Test Circuit

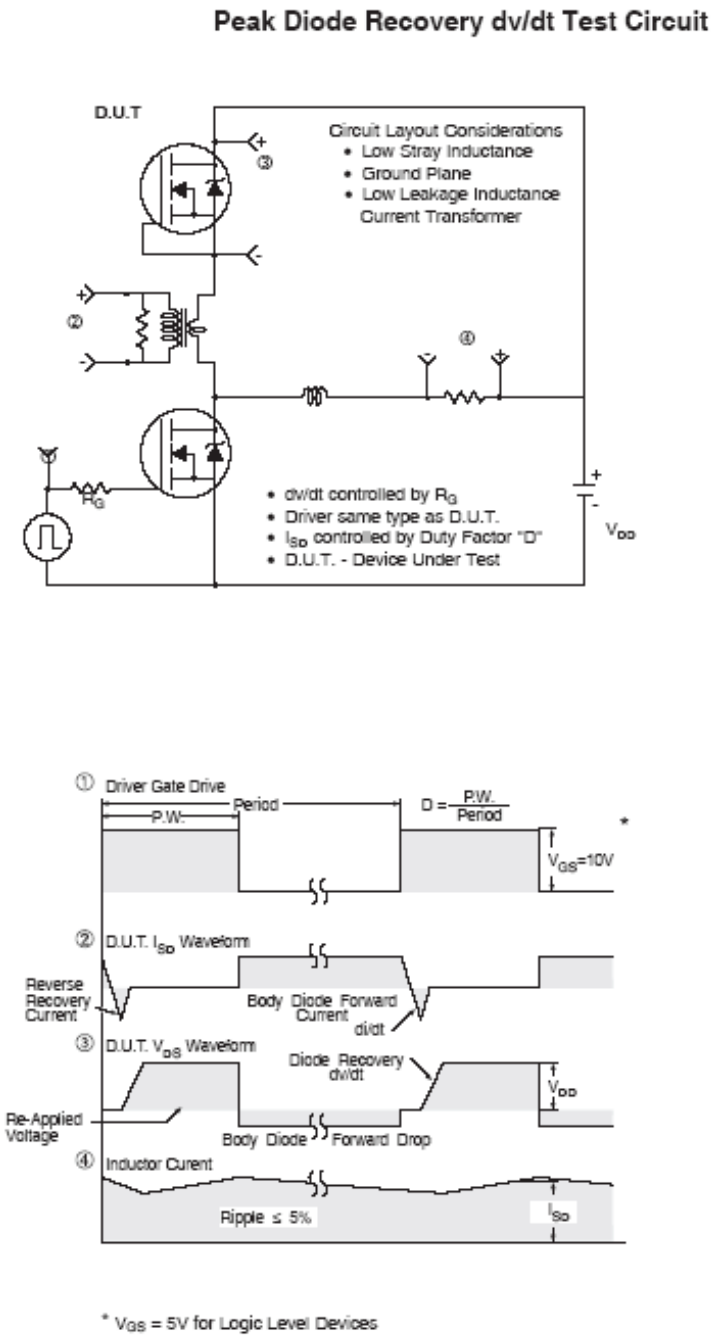

Fig 14. Peak Diode Recovery dv/dt Test Circuit for N-Channel HEXFET® Power MOSFETs

D-Pak (TO-252AA) Package Outline (Dimensions are shown in millimeters (inches))

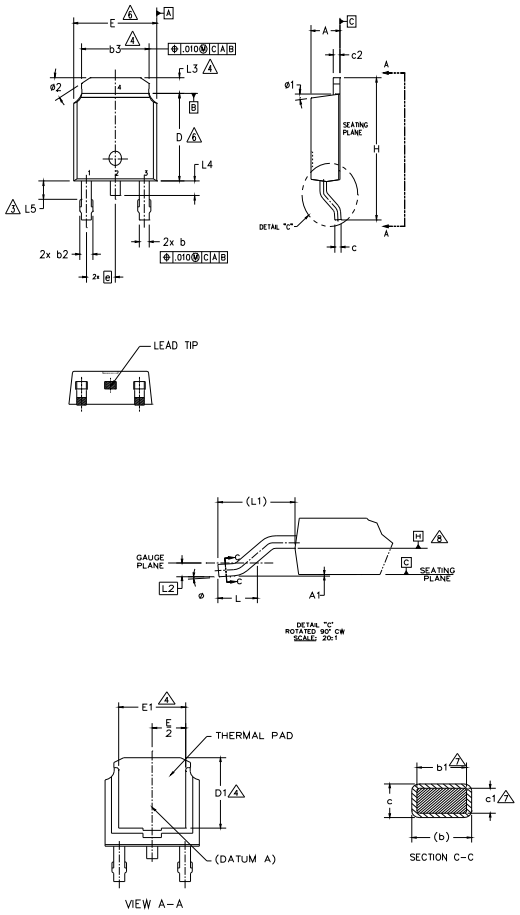

NOTES:

1.– DIMENSIONING AND TOLERANCING PER ASME Y14.5M–1994

2.– DIMENSION ARE SHOWN IN INCHES [MILLIMETERS].

3.– LEAD DIMENSION UNCONTROLLED IN L5.

4.– DIMENSION D1, E1, L3 & b3 ESTABLISH A MINIMUM MOUNTING SURFACE FOR THERMAL PAD.

5.– SECTION C–C DIMENSIONS APPLY TO THE FLAT SECTION OF THE LEAD BETWEEN .005 AND 0.10 [0.13 AND 0.25] FROM THE LEAD TIP.

6.– DIMENSION D & E DO NOT INCLUDE MOLD FLASH. MOLD FLASH SHALL NOT EXCEED .005 [0.13] PER SIDE. THESE DIMENSIONS ARE MEASURED AT THE OUTMOST EXTREMES OF THE PLASTIC BODY.

7.– DIMENSION b1 & c1 APPLIED TO BASE METAL ONLY.

8.– DATUM A & B TO BE DETERMINED AT DATUM PLANE H.

9.– OUTLINE CONFORMS TO JEDEC OUTLINE TO–252AA.

SYMBOL	DIMENSIONS				NOTES
	MILLIMETERS		INCHES		
	MIN.	MAX.	MIN.	MAX.	
A	2.18	2.39	.086	.094	
A1	–	0.13	–	.005	
b	0.64	0.89	.025	.035	
b1	0.65	0.79	.025	.031	7
b2	0.76	1.14	.030	.045	
b3	4.95	5.46	.195	.215	4
c	0.46	0.61	.018	.024	
c1	0.41	0.56	.016	.022	7
c2	0.46	0.89	.018	.035	
D	5.97	6.22	.235	.245	6
D1	5.21	–	.205	–	4
E	6.35	6.73	.250	.265	6
E1	4.32	–	.170	–	4
e	2.29 BSC		.090 BSC		
H	9.40	10.41	.370	.410	
L	1.40	1.78	.055	.070	
L1	2.74 BSC		.108 REF.		
L2	0.51 BSC		.020 BSC		
L3	0.89	1.27	.035	.050	4
L4	–	1.02	–	.040	
L5	1.14	1.52	.045	.060	3
ø	0°	10°	0°	10°	
ø1	0°	15°	0°	15°	
ø2	25°	35°	25°	35°	

LEAD ASSIGNMENTS

HEXFET

1.– GATE
2.– DRAIN
3.– SOURCE
4.– DRAIN

IGBT & CoPAK

1.– GATE
2.– COLLECTOR
3.– EMITTER
4.– COLLECTOR

D-Pak (TO-252AA) Part Marking Information

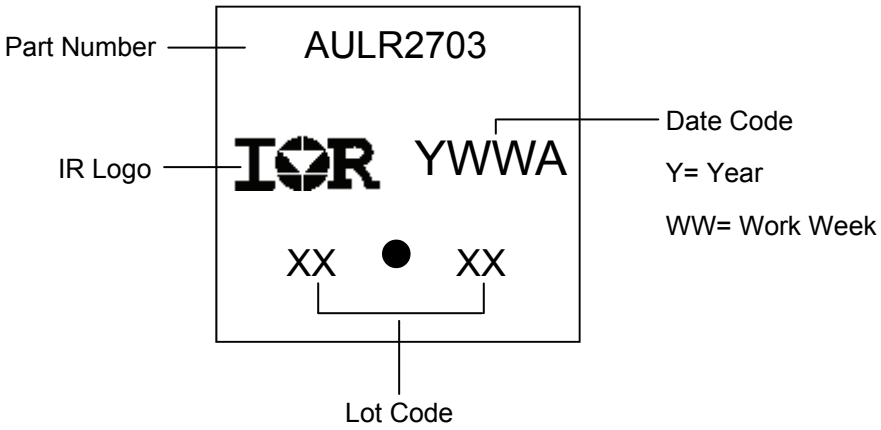

Note: For the most current drawing please refer to IR website at http://www.irf.com/package/

D-Pak (TO-252AA) Tape & Reel Information (Dimensions are shown in millimeters (inches))

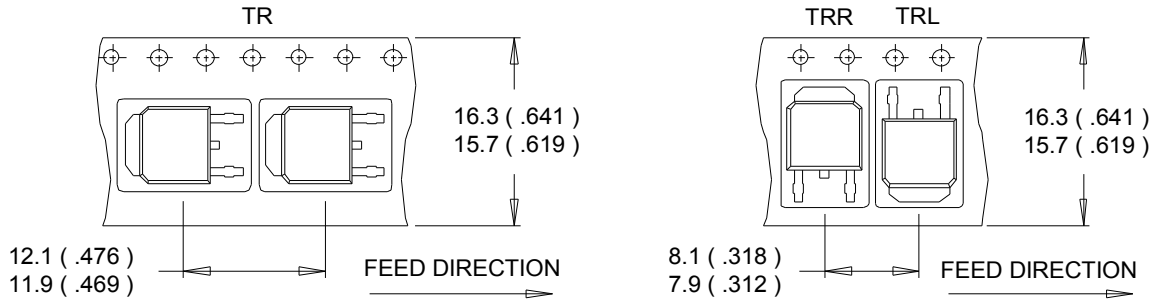

NOTES :
1. CONTROLLING DIMENSION : MILLIMETER.
2. ALL DIMENSIONS ARE SHOWN IN MILLIMETERS (INCHES).
3. OUTLINE CONFORMS TO EIA-481 & EIA-541.

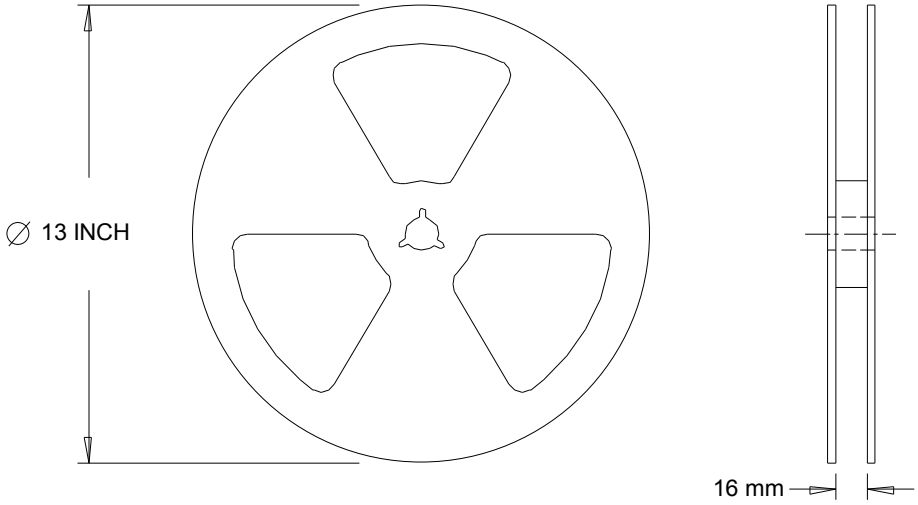

NOTES :
1. OUTLINE CONFORMS TO EIA-481.

Note: For the most current drawing please refer to IR website at http://www.irf.com/package/

Qualification Information

Qualification Level		Automotive (per AEC-Q101)	
		Comments: This part number(s) passed Automotive qualification. Infineon's Industrial and Consumer qualification level is granted by extension of the higher Automotive level.	
Moisture Sensitivity Level		D-Pak	MSL1
ESD	Machine Model	Class M2 (+/- 150V)† AEC-Q101-002	
	Human Body Model	Class H1A (+/- 500V) † AEC-Q101-001	
	Charged Device Model	Class C5 (+/- 2000V)† AEC-Q101-005	
RoHS Compliant		Yes	

† Highest passing voltage.

Revision History

Date	Comments
12/11/2015	• Updated datasheet with corporate template • Corrected ordering table on page 1.

Published by
Infineon Technologies AG
81726 München, Germany
© Infineon Technologies AG 2015
All Rights Reserved.

IMPORTANT NOTICE

The information given in this document shall in no event be regarded as a guarantee of conditions or characteristics ("Beschaffenheitsgarantie"). With respect to any examples, hints or any typical values stated herein and/or any information regarding the application of the product, Infineon Technologies hereby disclaims any and all warranties and liabilities of any kind, including without limitation warranties of non-infringement of intellectual property rights of any third party.

In addition, any information given in this document is subject to customer's compliance with its obligations stated in this document and any applicable legal requirements, norms and standards concerning customer's products and any use of the product of Infineon Technologies in customer's applications.

The data contained in this document is exclusively intended for technically trained staff. It is the responsibility of customer's technical departments to evaluate the suitability of the product for the intended application and the completeness of the product information given in this document with respect to such application.

For further information on the product, technology, delivery terms and conditions and prices please contact your nearest Infineon Technologies office (www.infineon.com).

WARNINGS

Due to technical requirements products may contain dangerous substances. For information on the types in question please contact your nearest Infineon Technologies office.

Except as otherwise explicitly approved by Infineon Technologies in a written document signed by authorized representatives of Infineon Technologies, Infineon Technologies' products may not be used in any applications where a failure of the product or any consequences of the use thereof can reasonably be expected to result in personal injury.