SiC MOSFET

PG-TO263-7

CoolSiC™ Automotive Power Device 750 V G2

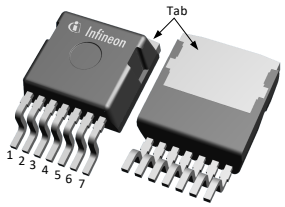

Built on Infineon's robust 2nd generation Silicon Carbide trench technology, the 750 V CoolSiC™ MOSFET delivers unparalleled performance, superior reliability, and great ease of use. It enables cost effective, highly efficient, and simplified designs to fulfill the ever-growing system and market needs.

Features

- Highly robust 750V technology, 100% avalanche tested
- Best-in-class $R_{DS(on)}$ x Q_{fr}
- Excellent $R_{DS(on)}$ x Q_{oss} and $R_{DS(on)}$ x Q_G
- Unique combination of low C_{rss}/C_{iss} and high $V_{GS(th)}$
- Infineon proprietary die attach technology
- Driver source pin available

Benefits

- Enhanced robustness and reliability for bus voltages beyond 500 V
- Superior efficiency in hard switching
- Higher switching frequency in soft switching topologies
- Robustness against parasitic turn on for unipolar gate driving
- Best-in-class thermal dissipation
- Reduced switching losses through improved gate control

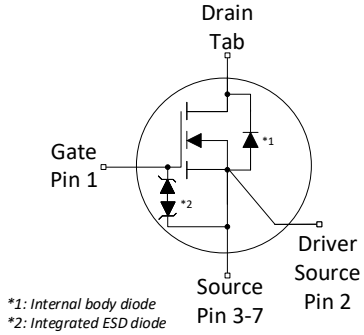

Potential applications

- Uni- and bidirectional On Board Chargers and HV-LV DCDC converters (hard switching half bridges and soft switching topologies)
- Circuit breakers (HV battery disconnect switch, DC and AC low frequency switch, HV E-fuse)
- Auxiliary drives

Product validation

Qualified for Automotive applications.
Product validation according to AEC-Q101.

Please note: The source and driver source pins are not exchangeable. Their exchange might lead to malfunction. When paralleling MOSFETs the placement of the gate resistor is generally recommended to be in series to the Driver Source instead of the Gate.

Table 1 Key performance parameters

Parameter	Value	Unit
V_{DSS} over full $T_{j,range}$	750	V
$R_{DS(on),typ}$	33	mΩ
$R_{DS(on),max}$	41	mΩ
$Q_{G,typ}$	37	nC
$I_{D,pulse}$	180	A
$Q_{oss,typ}$ @ 500 V	79	nC
$E_{oss,typ}$ @ 500 V	13.9	µJ

Part number	Package	Marking	Related links
AIMBG75R033M2H	PG-TO263-7	75A033M2	see Appendix A

Table of contents

Description 1
Maximum ratings 3
Thermal characteristics 4
Operating range 5
Electrical characteristics 6
Electrical characteristics diagrams 8
Test circuits 14
Package outlines 15
Appendix A 18
Revision history 19
Trademarks 20
Disclaimer 20

1 Maximum ratings

at T_j = 25°C, unless otherwise specified.

Note: for optimum lifetime and reliability, Infineon recommends operating conditions that do not exceed 80% of the maximum ratings stated in this datasheet.
For applications with applied blocking voltage > 525 V, it is required that the customer evaluates the impact of cosmic radiation effect in early design phase and contacts the Infineon sales office for the necessary technical support.
"Linear mode" operation is not recommended. For assessment of potential "linear mode" operation, please contact Infineon sales office.

Table 2 Maximum ratings

Parameter	Symbol	Values			Unit	Note / Test condition
		Min.	Typ.	Max.		
Drain-source voltage	V_{DSS}	-	-	750	V	static, T_j = -55°C to 175°C
Continuous DC drain current [1]	I_{DDC}	-	-	50	A	T_c = 25°C
				35.4		T_c = 100°C
Peak drain current [2]	I_{DM}	-	-	180	A	T_c = 25°C, V_{GS} = 18 V
Avalanche energy, single pulse	E_{AS}	-	-	169	mJ	I_D = 6.3 A, V_{DD} = 50 V; see table 11
Avalanche current, single pulse	I_{AS}	-	-	6.3	A	-
MOSFET *dv/dt* ruggedness	*dv/dt*	-	-	200	V/ns	V_{DS}= 0…500 V
Gate source voltage (static) [3]	V_{GS}	-7	-	23	V	-
Gate source voltage (transient)	V_{GS}	-11	-	25	V	t_p ≤ 500 ns, duty cycle ≤ 1%
Power dissipation	P_{tot}	-	-	189	W	T_c = 25°C
Storage temperature	T_{stg}	-55	-	150	°C	-
Operating junction temperature	T_j			175		
Extended operating junction temperature [4]	T_j	-	-	200	°C	≤ 100 h in the application lifetime
Mounting torque	-	-	-	n.a	Ncm	-
Continuous reverse drain current [1]	I_{SDC}	-	-	50	A	V_{GS} = 18 V, T_c = 25°C
				33		V_{GS} = 0 V, T_c = 25°C
Peak reverse drain current [2]	I_{SM}	-	-	180	A	T_c = 25°C, t_p ≤ 250 ns
				51		T_c = 25°C
Insulation withstand voltage	V_{ISO}	-	-	n.a.	V	V_{rms}, T_c = 25°C, t = 1 min

[1] Limited by $T_{j,max}$.
[2] Pulse width t_{pulse} limited by $T_{j,max}$.
[3] The maximum gate-source voltage in the application design should be in accordance to IPC-9592B.
[4] Up to 7500 temperature cycles, where maximum delta *T* is limited to 100K.

2 Thermal characteristics

Table 3 Thermal characteristics

Parameter	Symbol	Values			Unit	Note / Test condition
		Min.	Typ.	Max.		
Thermal resistance, junction - case	$R_{th(j-c)}$	-	0.57	0.79	°C/W	Not subject to production test. Parameter verified by design/characterization according to JESD51-14.
Soldering temperature, reflow soldering allowed	T_{sold}	-	-	260	°C	reflow MSL1

3 Operating range

Table 4 Operating range

Parameter	Symbol	Values			Unit	Note / Test condition
		Min.	Typ.	Max.		
Recommended turn-on voltage	$V_{GS(on)}$	-	18	-	V	-
Recommended turn-off voltage	$V_{GS(off)}$		0			

4 Electrical characteristics

at T_j = 25°C, unless otherwise specified

Table 5 Static characteristics

Parameter	Symbol	Values			Unit	Note / Test condition
		Min.	Typ.	Max.		
Drain-source breakdown voltage [5]	$V_{(BR)DSS}$	840	-	-	V	V_{GS} = 0 V, I_D = 0.59 mA
Gate threshold voltage [6]	$V_{GS(th)}$	3.5	4.5	5.6	V	V_{DS} = V_{GS}, I_D = 5.9 mA, T_j = 25°C
		-	3.3	-		V_{DS} = V_{GS}, I_D = 5.9 mA, T_j = 175°C
Zero gate voltage drain current	I_{DSS}	-	1	75	µA	V_{DS} = 750 V, V_{GS} = 0 V, T_j = 25°C
			10	-		V_{DS} = 750 V, V_{GS} = 0 V, T_j = 175°C
Gate-source leakage current	I_{GSS}	-	-	1	µA	V_{GS} = 23V, V_{DS} = 0 V, T_j = 25°C
				-1		V_{GS} = -7V, V_{DS} = 0 V, T_j = 25°C
Forward transconductance	g_{fs}	-	16.0	-	S	I_D = 27.0 A, V_{DS} = 20 V
Drain-source on-state resistance	$R_{DS(on)}$	-	43.0	-	mΩ	V_{GS} = 15 V, I_D = 27.0 A, T_j = 25°C
			33.0	41.3		V_{GS} = 18 V, I_D = 27.0 A, T_j = 25°C
			30.0	-		V_{GS} = 20 V, I_D = 27.0 A, T_j = 25°C
Drain-source on-state resistance [7]	$R_{DS(on)}$	-	52.5	65.6	mΩ	V_{GS} = 18 V, I_D = 27.0 A, T_j = 150°C
Drain-source on-state resistance	$R_{DS(on)}$	-	59.0	-	mΩ	V_{GS} = 18 V, I_D = 27.0 A, T_j =175°C
Short-circuit withstand time [7]	t_{SC}	-	2.0	-	µs	V_{DD} = 500 V, V_{GS} = 18 V, $V_{DS(peak)}$ < 750 V, $R_{G,ext}$ = 2.3 Ω
Internal gate resistance	$R_{G,int}$	-	2.5	-	Ω	f = 1 MHz

[5] Provided as measure of robustness under abnormal operating conditions and not recommended for normal operation.

[6] Tested after pre-conditioning pulse at V_{GS} = +20 V. “Linear mode” operation is not recommended. For assessment of potential “linear mode” operation, please contact Infineon sales office.

[7] Specified by design, not subject to production test.

Table 6 Dynamic characteristics

External parasitic elements (PCB layout) influence switching behavior significantly.
Stray inductances and coupling capacitances must be minimized.
For layout recommendations please use provided application notes or contact Infineon sales office.

Parameter	Symbol	Values			Unit	Note / Test condition
		Min.	Typ.	Max.		
Input capacitance	C_{iss}	-	1299	-	pF	V_{GS} = 0 V, V_{DS} = 500 V, f = 250 kHz
Reverse transfer capacitance	C_{rss}		6.7	-		
Output capacitance [8]	C_{oss}		89	116		
Output charge [8]	Q_{oss}	-	79	103	nC	calculation based on C_{oss}
Effective output capacitance, energy related [9]	$C_{o(er)}$	-	111	-	pF	V_{GS} = 0 V, V_{DS} = 0…500 V

Table 6 Dynamic characteristics

External parasitic elements (PCB layout) influence switching behavior significantly.
Stray inductances and coupling capacitances must be minimized.
For layout recommendations please use provided application notes or contact Infineon sales office.

Parameter	Symbol	Values			Unit	Note / Test condition
		Min.	Typ.	Max.		
Effective output capacitance, time related [10]	$C_{o(tr)}$	-	158	-	pF	I_D = constant, V_{GS} = 0 V, V_{DS} = 0…500 V
Turn-on delay time	$t_{d(on)}$	-	9	-	ns	V_{DD} = 500 V, V_{GS} = 0/18 V, I_D = 27.0 A, $R_{G,ext}$ = 1.8 Ω, L_{stray} = 15 nH; see table 10
Rise time	t_r		8		ns	
Turn-off delay time	$t_{d(off)}$		19		ns	
Fall time	t_f		6		ns	
Turn-ON switching losses [11]	E_{on}		41		µJ	
Turn-OFF switching losses [11]	E_{off}		23		µJ	
Total switching losses [11]	E_{tot}		64		µJ	

[8] Maximum specification is defined by calculated six sigma upper confidence bound.
[9] $C_{o(er)}$ is a fixed capacitance that gives the same stored energy as C_{oss} while V_{DS} is rising from 0 to 500 V.
[10] $C_{o(tr)}$ is a fixed capacitance that gives the same charging time as C_{oss} while V_{DS} is rising from 0 to 500 V.
[11] MOSFET used in half-bridge configuration without external diode. Parameter verified by characterization according to IEC 60747-8.

Table 7 Gate charge characteristics

Parameter	Symbol	Values			Unit	Note / Test condition
		Min.	Typ.	Max.		
Plateau gate to source charge	$Q_{GS(pl)}$	-	9.4	-	nC	V_{DD} = 500 V, I_D = 27.0 A, V_{GS} = 0 to 18 V
Gate to drain charge	Q_{GD}		8.0			
Total gate charge	Q_G		37			

Table 8 Reverse diode characteristics

Parameter	Symbol	Values			Unit	Note / Test condition
		Min.	Typ.	Max.		
Drain-source reverse voltage	V_{SD}	-	4.1	5.0	V	V_{GS} = 0 V, I_S = 27.0 A, T_j = 25°C
			3.8	-		V_{GS} = 0 V, I_S = 27.0 A, T_j = 175°C
MOSFET forward recovery time	t_{fr}	-	8	-	ns	V_{DD} = 500 V, I_S = 27.0 A, di_S/dt = 4000 A/µs; see table 9
MOSFET forward recovery charge [12]	Q_{fr}		89		nC	
MOSFET peak forward recovery current	I_{frm}		23		A	

[12] Q_{fr} includes Q_{oss}

5 Electrical characteristics diagrams

Diagram 1: Power dissipation

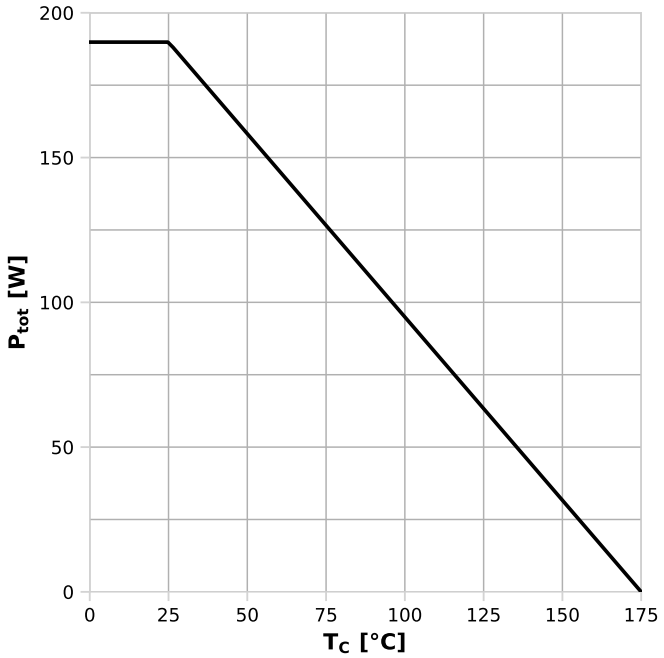

$P_{tot}=f(T_C)$

Diagram 2: Safe operating area

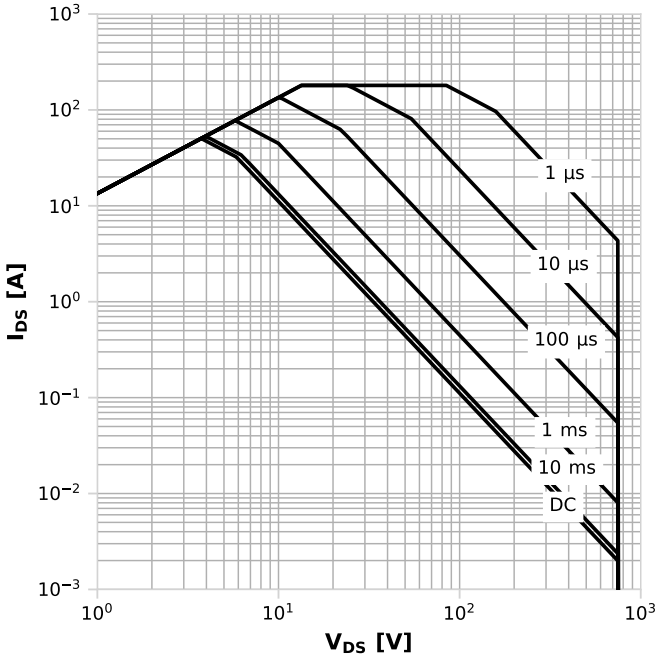

$I_{DS}=f(V_{DS})$; T_C=25°C; D=0; parameter: t_p

Diagram 3: Safe operating area

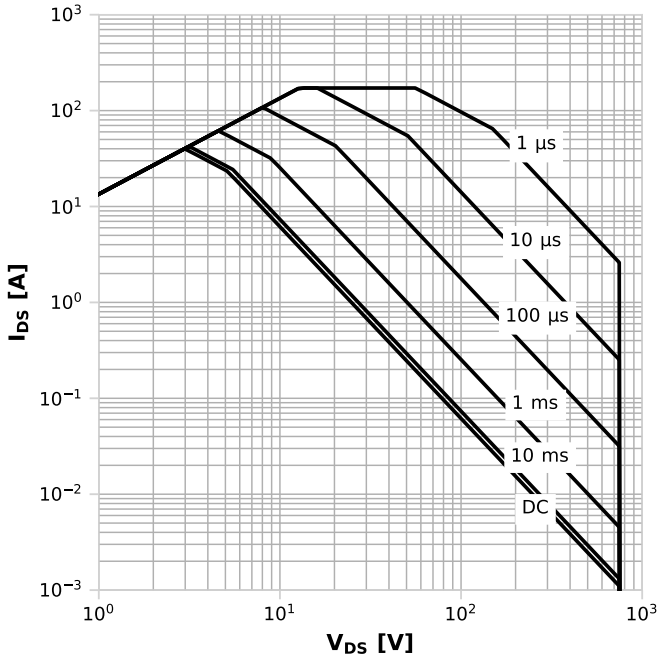

$I_{DS}=f(V_{DS})$; T_C=80°C; D=0; parameter: t_p

Diagram 4: Max. transient thermal impedance

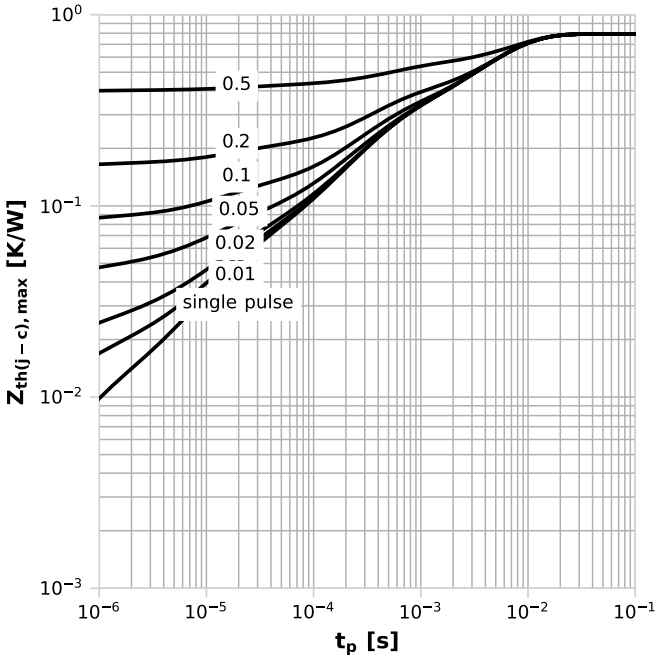

$Z_{th(j-c),max}=f(t_P)$; parameter: $D=t_p/T$

Diagram 5: Typ. output characteristics

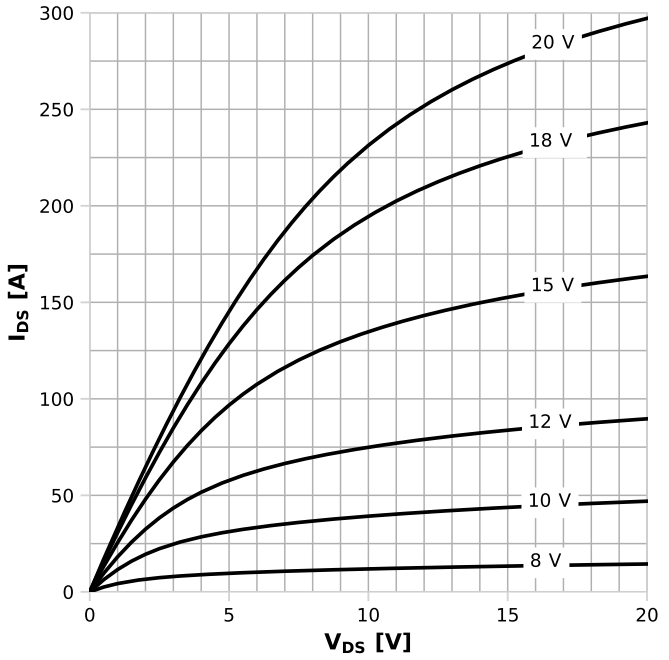

I_{DS}=f(V_{DS}); T_j=25°C; parameter: V_{GS}

Diagram 6: Typ. output characteristics

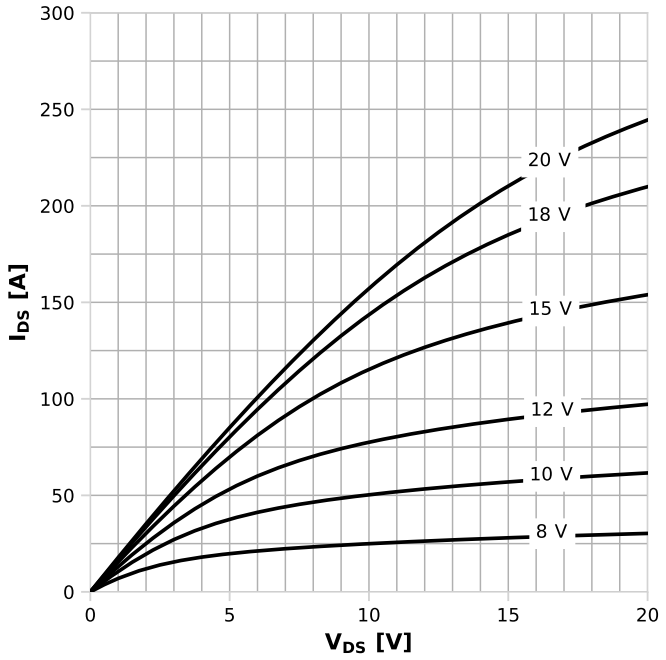

I_{DS}=f(V_{DS}); T_j=175°C; parameter: V_{GS}

Diagram 7: Typ. drain-source on-state resistance

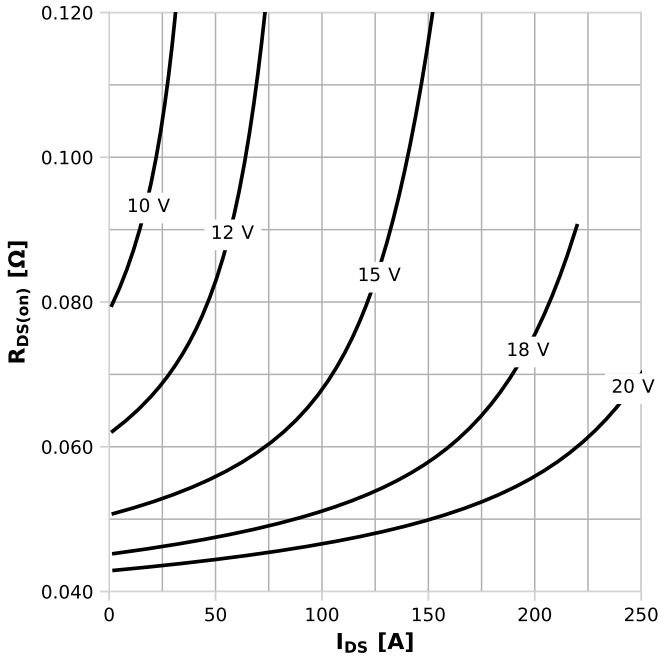

$R_{DS(on)}$=f(I_{DS}); T_j=125°C; parameter: V_{GS}

Diagram 8: Drain-source on-state resistance

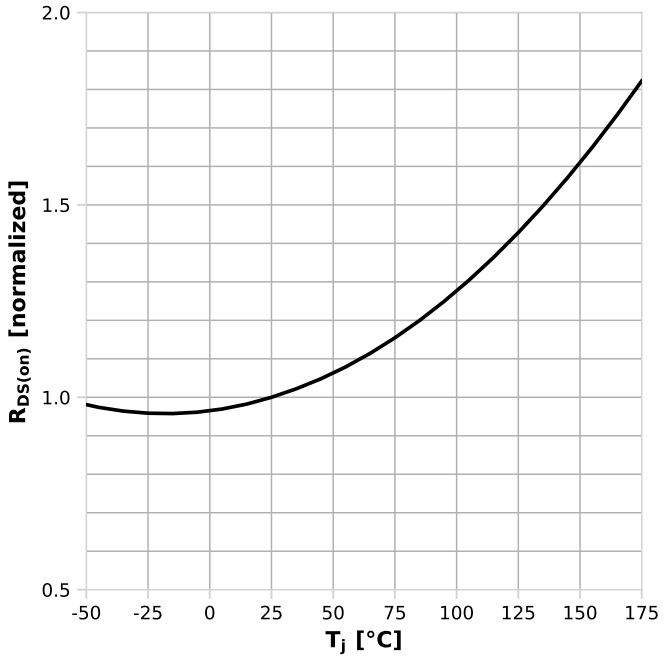

$R_{DS(on)}$=f(T_j); I_D=27.0 A; V_{GS}=18 V

Diagram 9: Typ. transfer characteristics

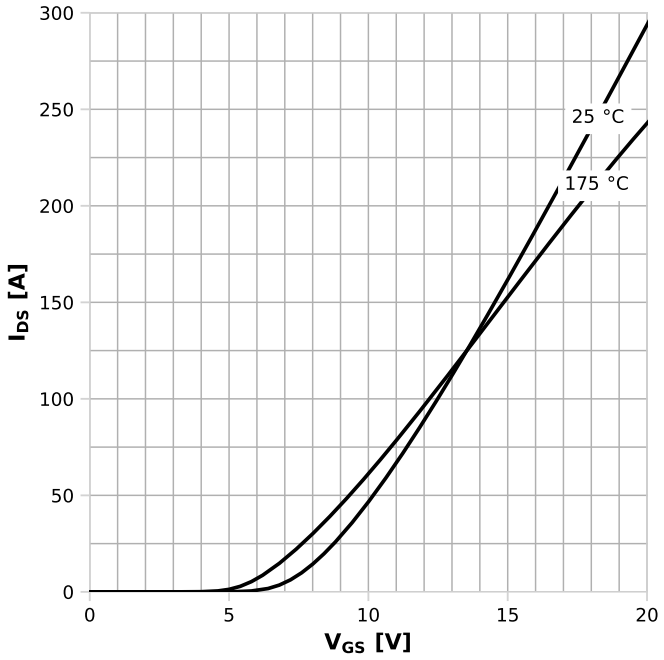

I_{DS}=f(V_{GS}); V_{DS}=20 V; parameter: T_j

Diagram 10: Typ. gate charge

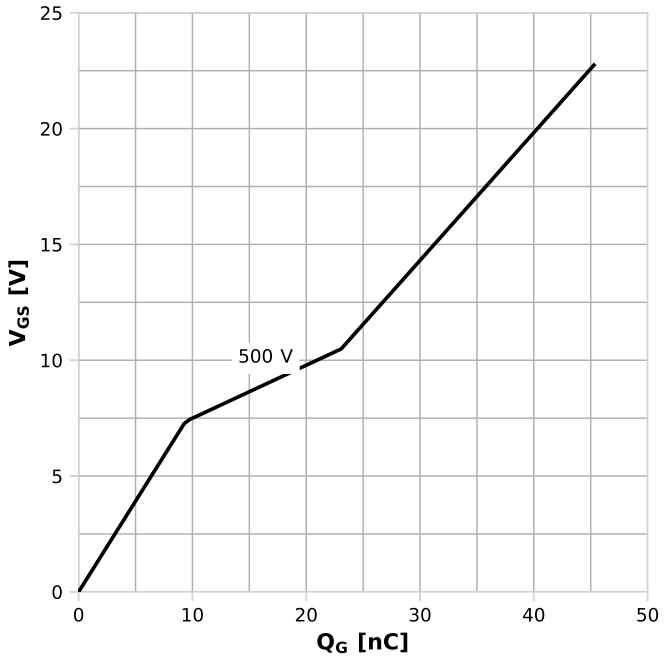

V_{GS}=f(Q_G); I_D=27.0 A pulsed; parameter: V_{DD}

Diagram 11: Typ. reverse drain current characteristics

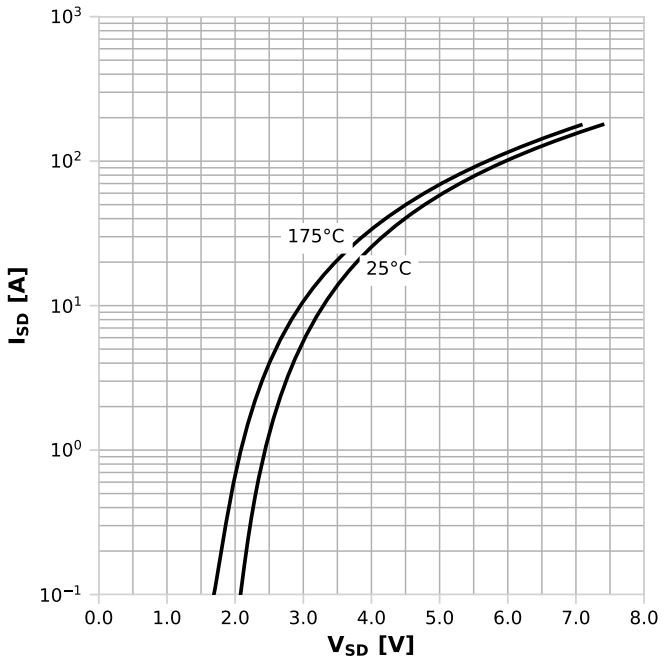

I_{SD}=f(V_{SD}); V_{GS}=0 V; parameter: T_j

Diagram 12: Typ. reverse drain current characteristics

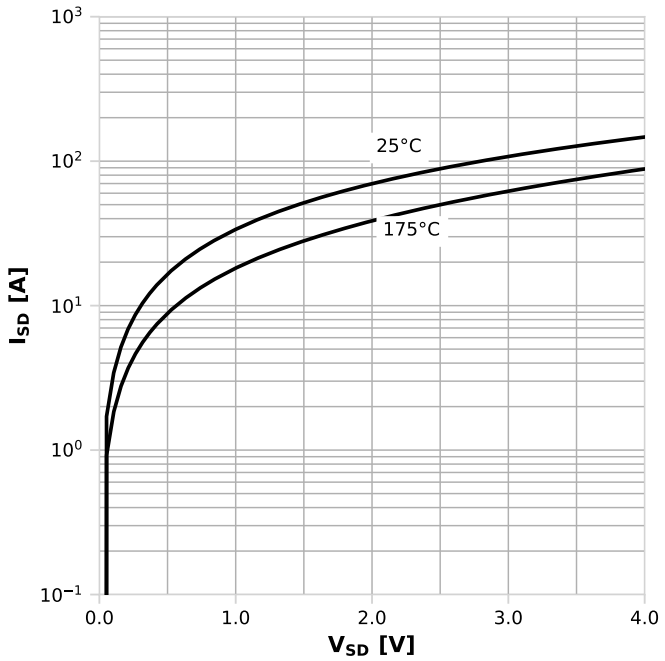

I_{SD}=f(V_{SD}); V_{GS}=18 V; parameter: T_j

Diagram 13: Avalanche energy	Diagram 14: Drain-source breakdown voltage
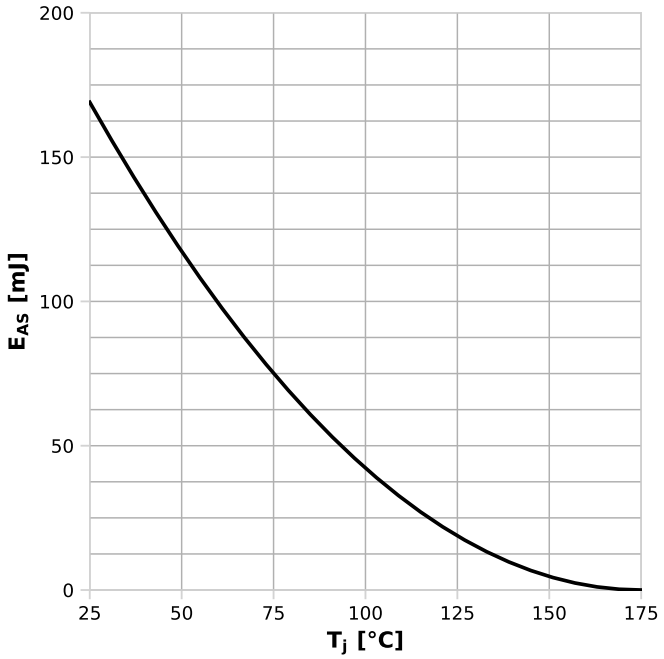	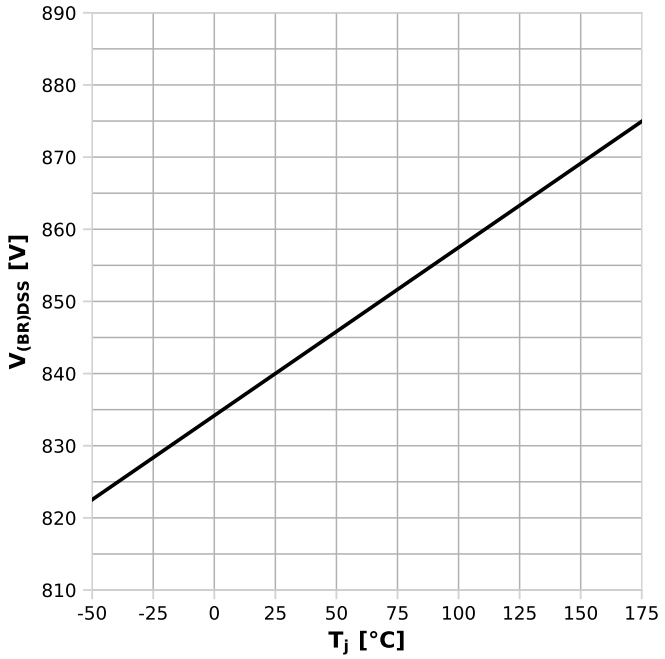
E_{AS}=f(T_j); I_D=6.3 A; V_{DD}=50 V	V_{DSS}=f(T_j); I_D=0.59 mA

Diagram 15: Typ. capacitances	Diagram 16: Typ. Coss stored energy
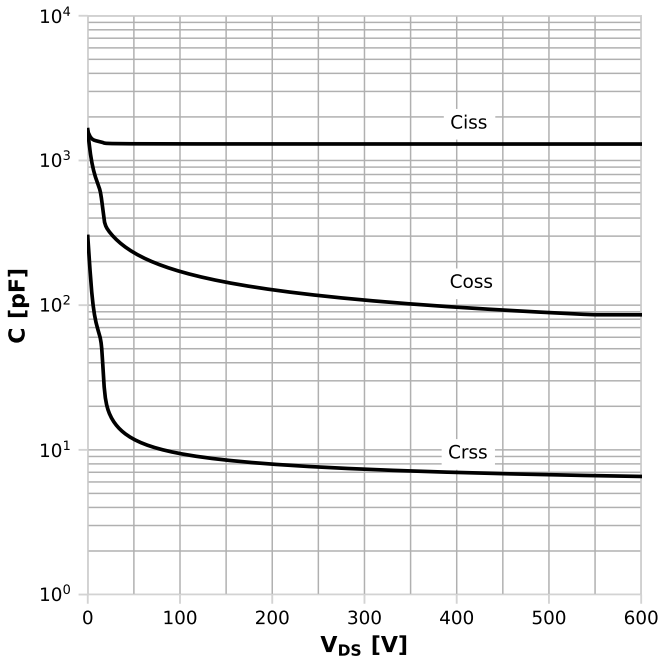	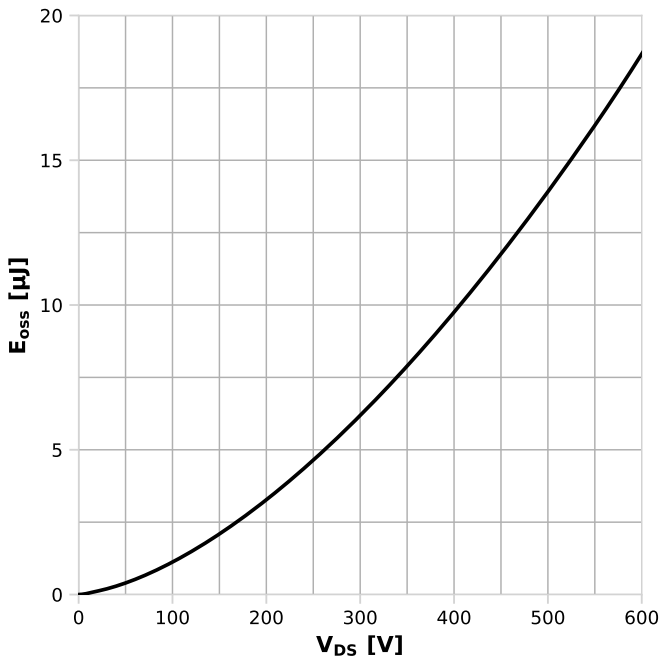
C=f(V_{DS}); V_{GS}=0 V; f=250 kHz	E_{oss}=f(V_{DS})

Diagram 17: Typ. Qoss output charge

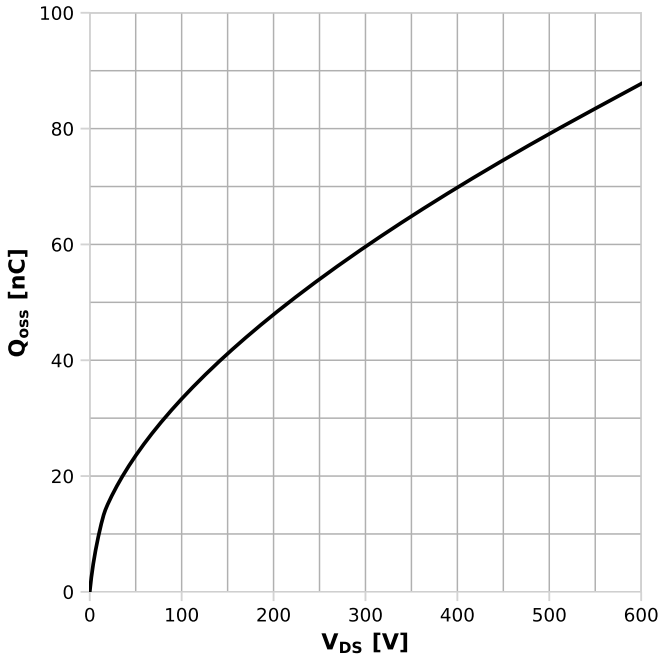

Q_{oss}=f(V_{DS})

Diagram 18: Typ. gate threshold voltage

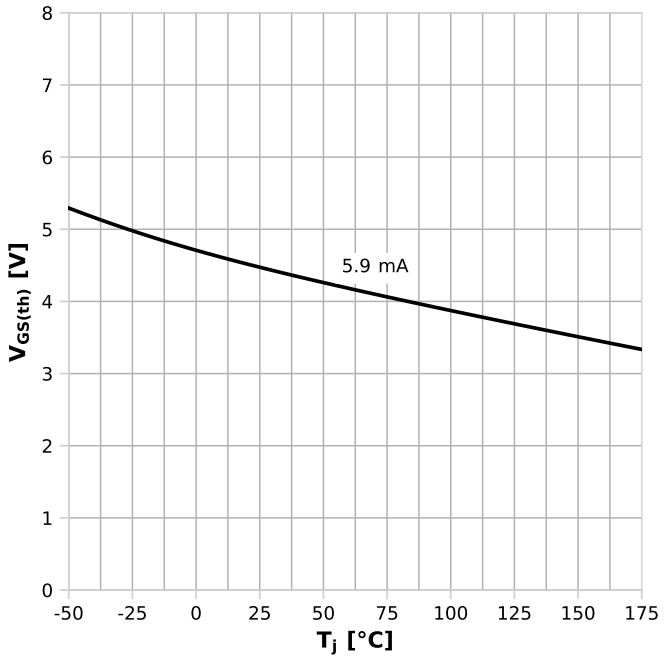

$V_{GS(th}$=f(T_j), V_{GS}=V_{DS}; parameter: I_D

Diagram 19: Typ. Switching Losses vs $R_{G,ext}$

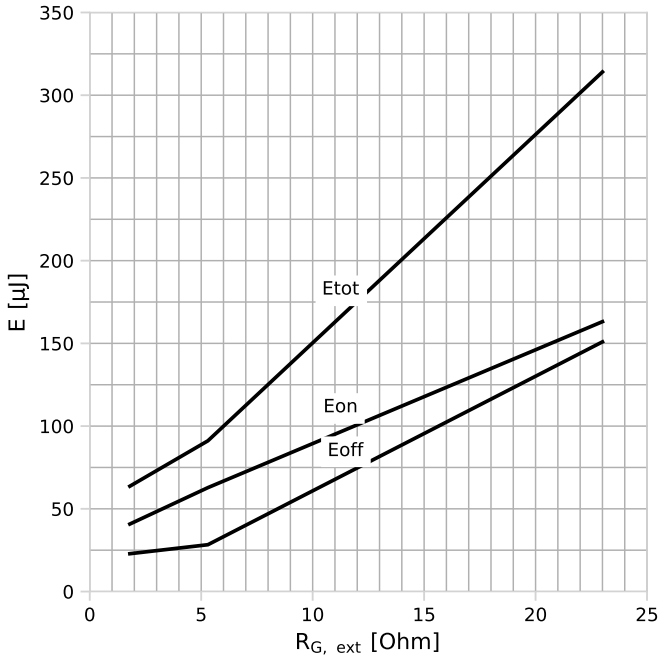

V_{DD}=500 V; I_D=27.0 A; T_J=25°C

Diagram 20: Typ. Switching Losses vs switching current

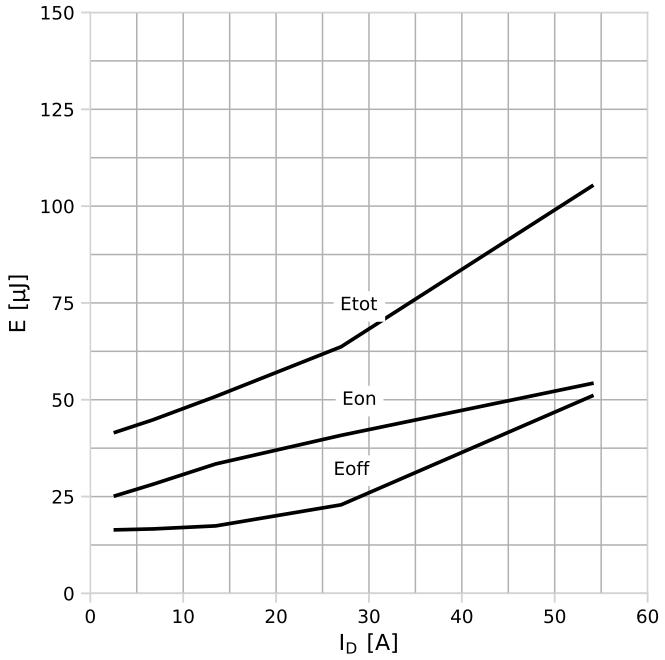

V_{DD}=500 V; $R_{G,ext}$=1.8 Ohm; T_J=25°C

Diagram 21: Typ. Switching Losses vs T_J

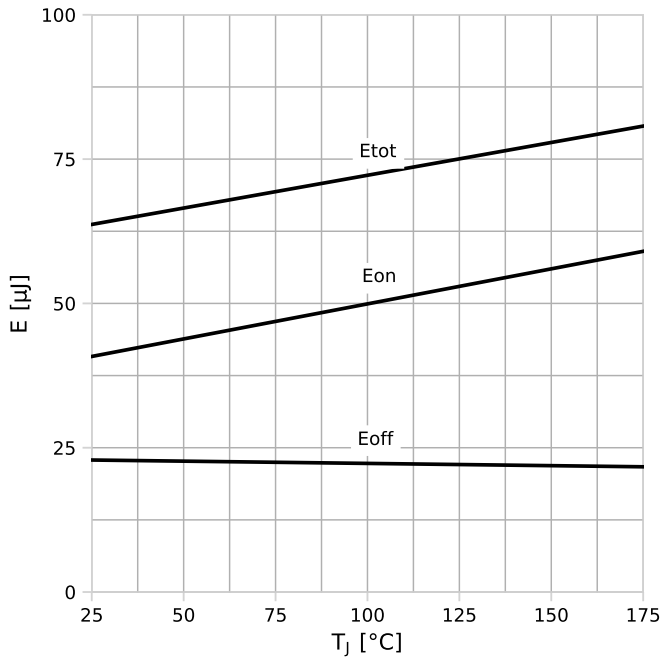

V_{DD}=500 V; $R_{G,ext}$=1.8 Ohm; I_D=27.0 A

6 Test circuits

Table 9 Body diode characteristics

Test circuit for body diode characteristics	Body diode recovery waveform
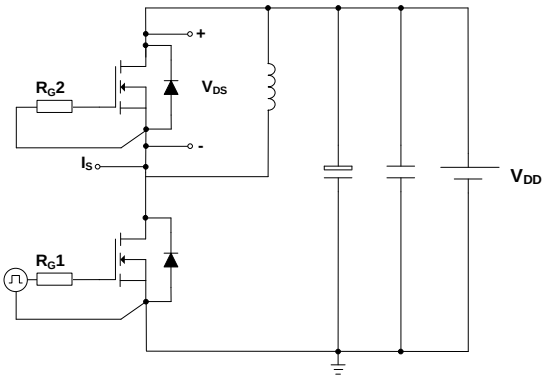	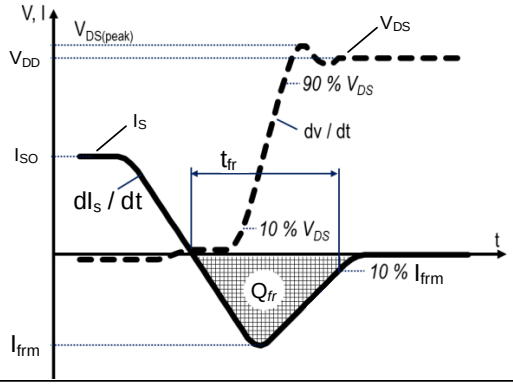

Table 10 Switching times

Switching times test circuit for inductive load	Switching times waveform
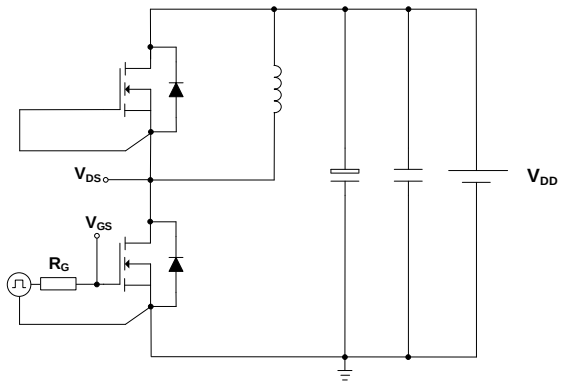	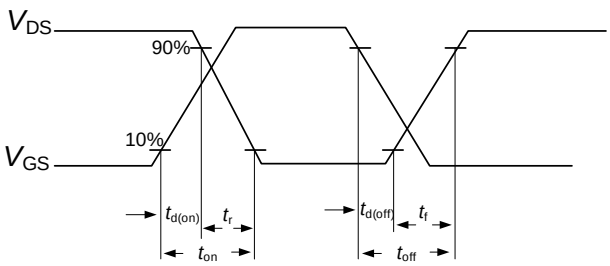

Table 11 Unclamped inductive load

Unclamped inductive load test circuit	Unclamped inductive waveform
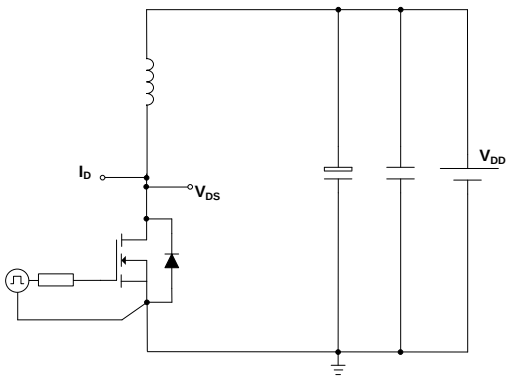	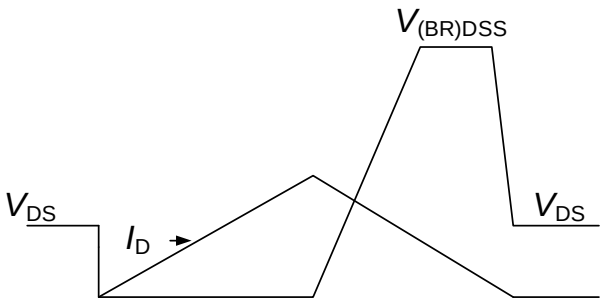

7 Package outlines

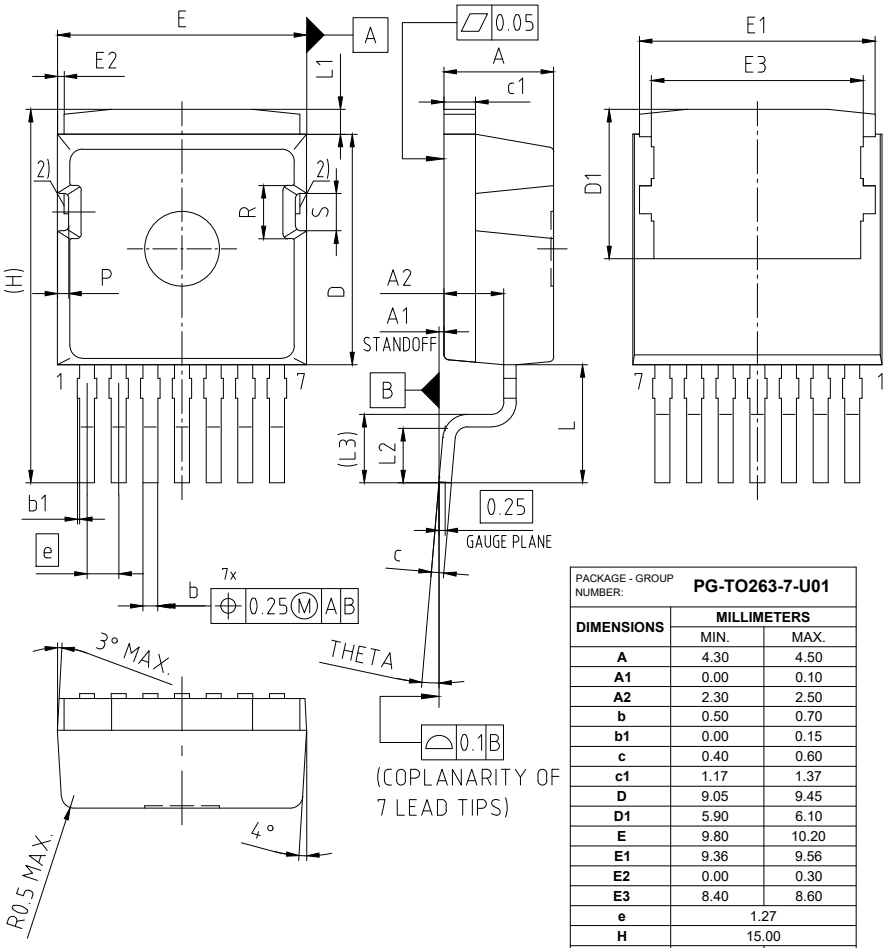

NOTES:
1) ALL METAL SURFACES TIN PLATED EXCEPT AREA OF CUT
2) MOLD FILLING IS ACCEPTABLE AT THIS AREA

PACKAGE - GROUP NUMBER:	PG-TO263-7-U01	
DIMENSIONS	MILLIMETERS	
	MIN.	MAX.
A	4.30	4.50
A1	0.00	0.10
A2	2.30	2.50
b	0.50	0.70
b1	0.00	0.15
c	0.40	0.60
c1	1.17	1.37
D	9.05	9.45
D1	5.90	6.10
E	9.80	10.20
E1	9.36	9.56
E2	0.00	0.30
E3	8.40	8.60
e	1.27	
H	15.00	
L	4.20	5.20
L1	0.70	1.30
L2	1.70	2.30
L3	2.70	
P	0.35	0.55
R	2.03	2.23
S	1.40	1.60
THETA	0.00°	8.00°

Figure 1 Outline PG-TO263-7, dimensions in mm

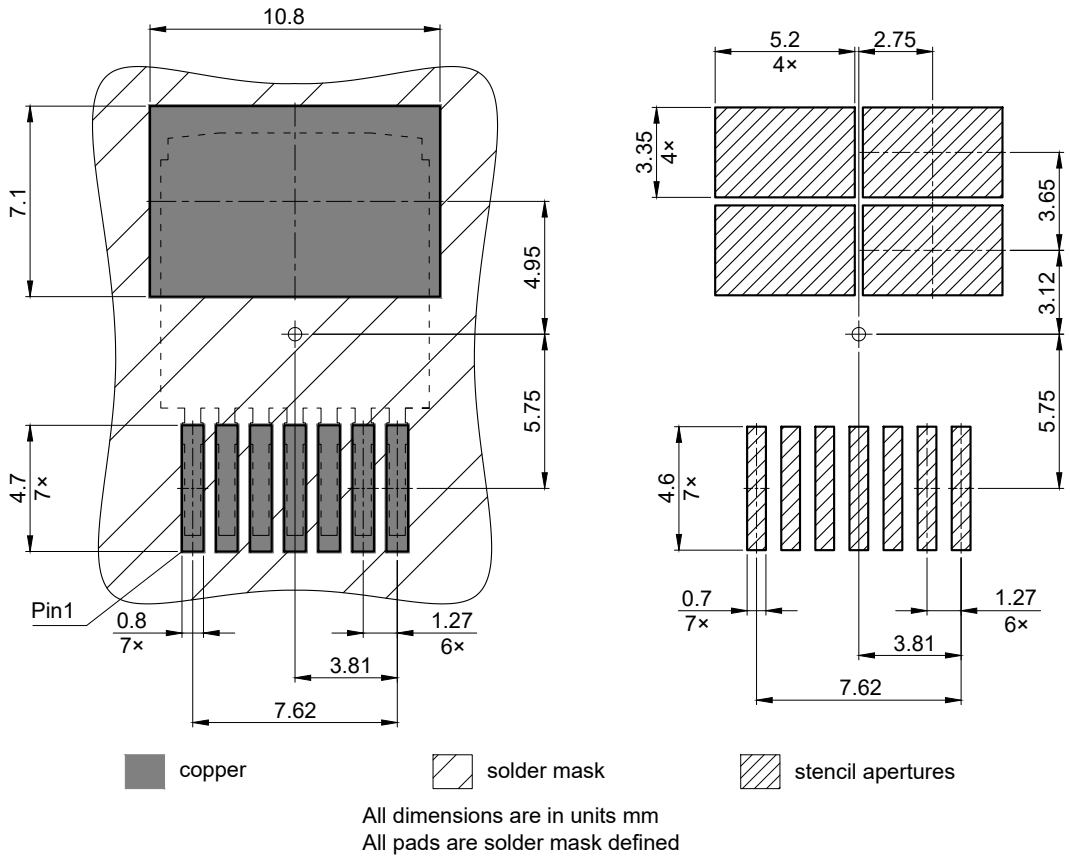

Figure 2 Footprint drawing PG-TO263-7, dimensions in mm

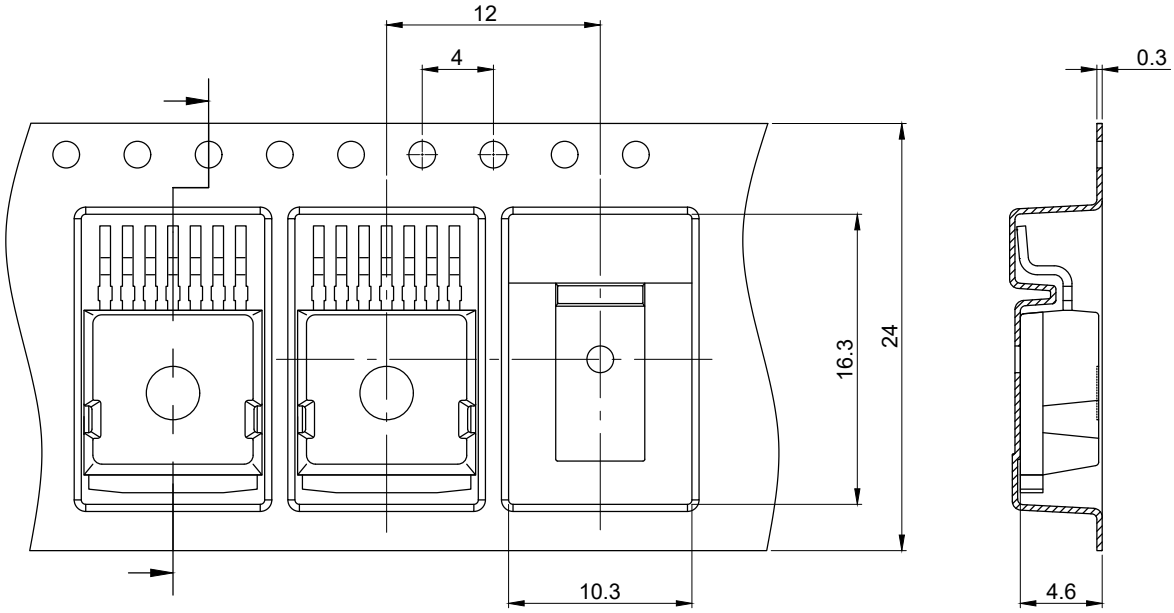

All dimensions are in units mm
The drawing is in compliance with ISO 128-30, Projection Method 1 [ ]

Figure 3 Packaging variant PG-TO263-7, dimensions in mm

8 Appendix A

Table 12 Related links

- IFX CoolSiC CoolSiC™ Automotive Power Device 750 V G2 Webpage
- IFX CoolSiC CoolSiC™ Automotive Power Device 750 V G2 Application Note
- IFX CoolSiC CoolSiC™ Automotive Power Device 750 V G2 Simulation Model
- IFX Design tools

Revision history

AIMBG75R033M2H

Revision 2026-09-25, Rev. 1.2

Previous revisions

Revision	Date	Subjects (major changes since last revision)
1.0	2025-09-16	Release of final version
1.1	2025-12-16	Diag 19: Switching Losses vs Rg --> label change
1.2	2026-09-25	Legend in Diagram 12 corrected; axis labeling in Diagram 14 updated.

Trademarks
All referenced product or service names and trademarks are the property of their respective owners.

Published by Infineon Technologies AG, Am Campeon 1-15, 85579 Neubiberg, Germany
Copyright (c) 2026 Infineon Technologies AG and its affiliates. All Rights Reserved.

Important notice
Products which may also include samples and may be comprised of hardware or software or both ("Product(s)") are sold or provided and delivered by Infineon Technologies AG and its affiliates ("Infineon") subject to the terms and conditions of the frame supply contract or other written agreement(s) executed by a customer and Infineon or, in the absence of the foregoing, the applicable Sales Conditions of Infineon. General terms and conditions of a customer or deviations from applicable Sales Conditions of Infineon shall only be binding for Infineon if and to the extent Infineon has given its express written consent.

For the avoidance of doubt, Infineon disclaims all warranties of non-infringement of third-party rights and implied warranties such as warranties of fitness for a specific use/purpose or merchantability.

Infineon shall not be responsible for any information with respect to samples, the application or customer's specific use of any Product or for any examples or typical values given in this document.

The data contained in this document is exclusively intended for technically qualified and skilled customer representatives. It is the responsibility of the customer to evaluate the suitability of the Product for the intended application and the customer's specific use and to verify all relevant technical data contained in this document in the intended application and the customer's specific use. The customer is responsible for properly designing, programming, and testing the functionality and safety of the intended application, as well as complying with any legal requirements related to its use.

Unless otherwise explicitly approved by Infineon, Products may not be used in any application where a failure of the Products or any consequences of the use thereof can reasonably be expected to result in personal injury. However, the foregoing shall not
prevent the customer from using any Product in such fields of use that Infineon has explicitly designed and sold it for, provided that the overall responsibility for the application lies with the customer.

Infineon expressly reserves the right to use its content for commercial text and data mining (TDM) according to applicable laws, e.g. Section 44b of the German Copyright Act (UrhG).

If the Product includes security features: Because no computing device can be absolutely secure, and despite security measures implemented in the Product, Infineon does not guarantee that the Product will be free from intrusion, data theft or loss, or other breaches ("Security Breaches"), and Infineon shall have no liability arising out of any Security Breaches.

If this document includes or references software:
The software is owned by Infineon under the intellectual property laws and treaties of the United States, Germany, and other countries worldwide. All rights reserved. Therefore, you may use the software only as provided in the software license agreement accompanying the software. If no software license agreement applies, Infineon hereby grants you a personal, non-exclusive, non-transferable license (without the right to sublicense) under its intellectual property rights in the software (a) for software provided in source code form, to modify and reproduce the software solely for use with Infineon hardware products, only internally within your organization, and (b) to distribute the software in binary code form externally to end users, solely for use on Infineon hardware products. Any other use, reproduction, modification, translation, or compilation of the software is prohibited.

For further information on the Product, technology, delivery terms and conditions, and prices, please contact your nearest Infineon office or visit https://www.infineon.com.