TLE9845_APPKIT_PN User's Manual

Product Family: TLE984xQX

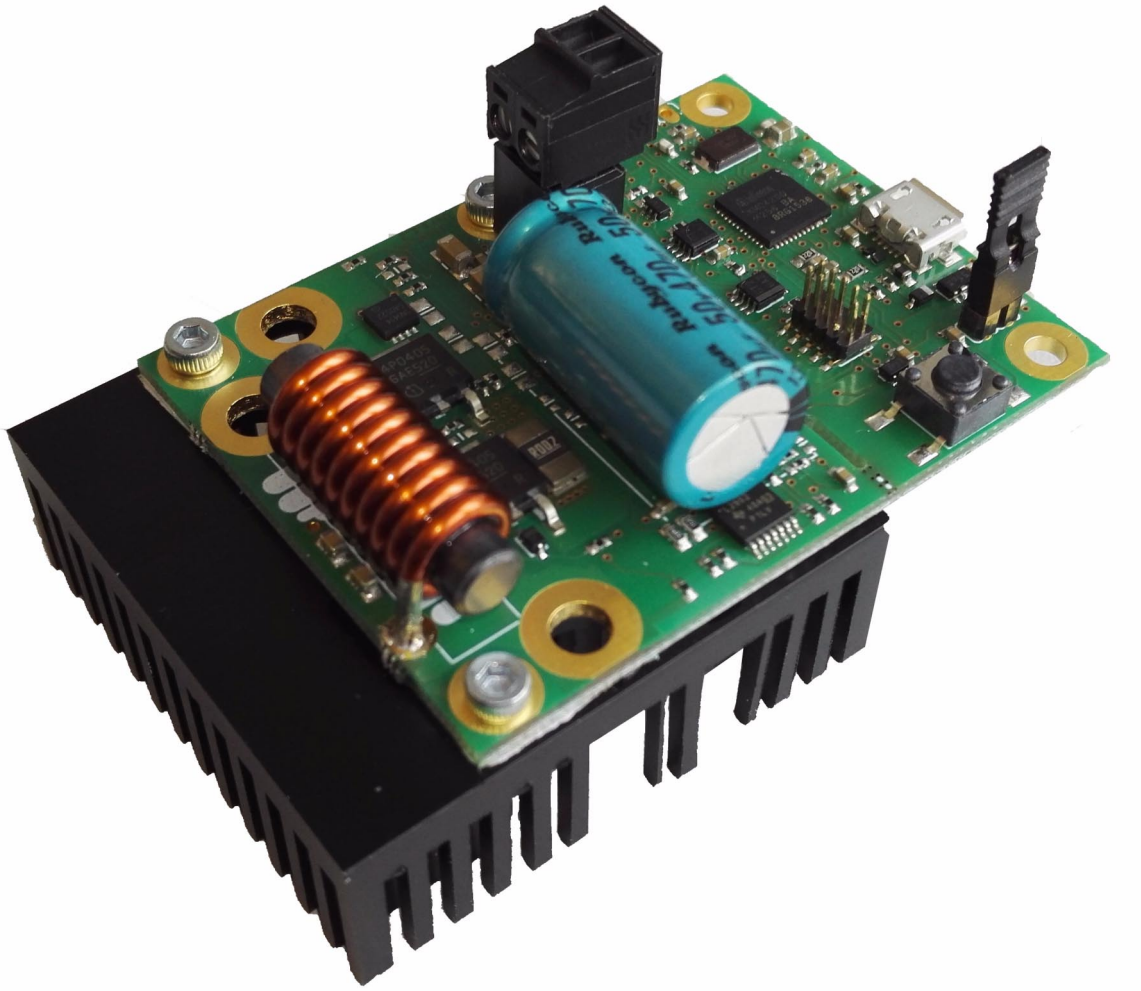

Figure 1 TLE9845QX Application Kit with PN-Halfbridge

About this document

Scope and purpose

The TLE9845_APPKIT_PN is designed to evaluate hardware and software functionalities of the TLE9845QX in an application similar designed shape.

The p- and n-channel MOSFETs are placed in halfbridge connection to drive DC motors unidirektionally.

This documentation describes the basic use of the TLE9845_APPKIT_PN, a TLE9845 32-bit ARM Cortex M0 Core, its functionality and how to get started with an application running on the evaluation board.

Note: This Evaluationboard is not optimized for EMC behavior.

Intended audience

This Document is for everyone who works with the TLE9845_APPKIT_PN

Table of Contents

About this document 1

Table of Contents 2

1 Concept 3

2 Interconnections 4

3 Communication Interfaces 5

3.1 LIN and uIO for LIN BSL 5

3.2 UART (Virtual COM PORT via USB) 5

3.3 SWD-Debuginterface (J-Link via USB) 5

4 Software Toolchain 6

4.1 Keil µVision 5 6

4.2 Infineon Config Wizard 6

4.3 TLE9845QX Installation 6

4.4 Debug Connection Setup 6

4.5 GUI Description 7

4.5.1 General 7

4.5.2 Open the GUI 7

4.5.3 Connecting to the TLE9845 Device 8

5 Schematic and Layout 9

6 Revision History 12

1 Concept

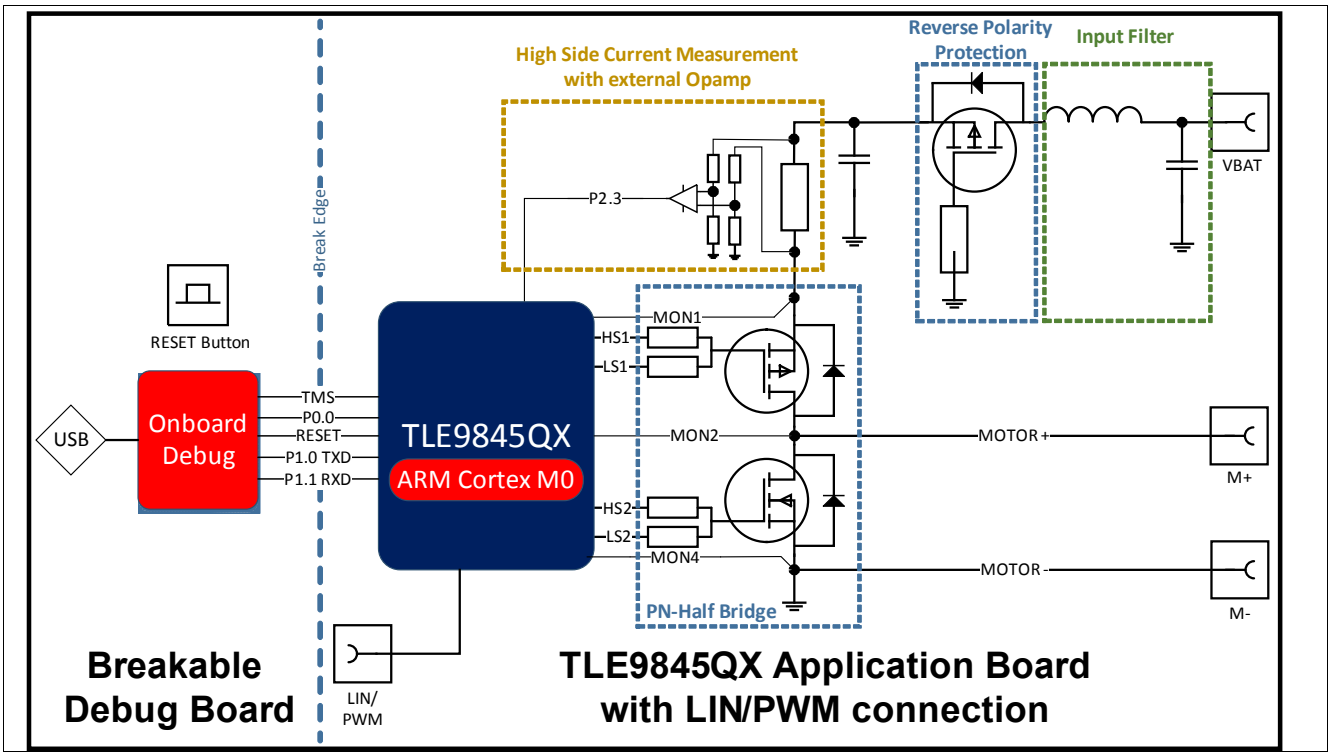

Figure 2 PN Applikation Kit Concept

This board is designed to provide a fast and easy start of evaluation, for Infineons embedded Power IC TLE9845QX.

The TLE9845QX device is placed underneath the DC-link capacitor. The board is protected against reverse polarity of input voltage supply.

A PN-channel MOSFET halfbridge is connected to the integrated highside and lowside switches of the TLE9845QX Device. It can be used to evaluate several DC motor applications.
In addition a highside current sense resistor is placed with an external operational amplifier.
It is connected to the ADC1 (P2.3).

The Application Kit provides a breakable On-Board debugger. It provides a SWD-Debug connection and a virtual COM port for serial UART communication.

Power Supply and Motor connectiors are accessable via M2.5 screws nuts.

2 Interconnections

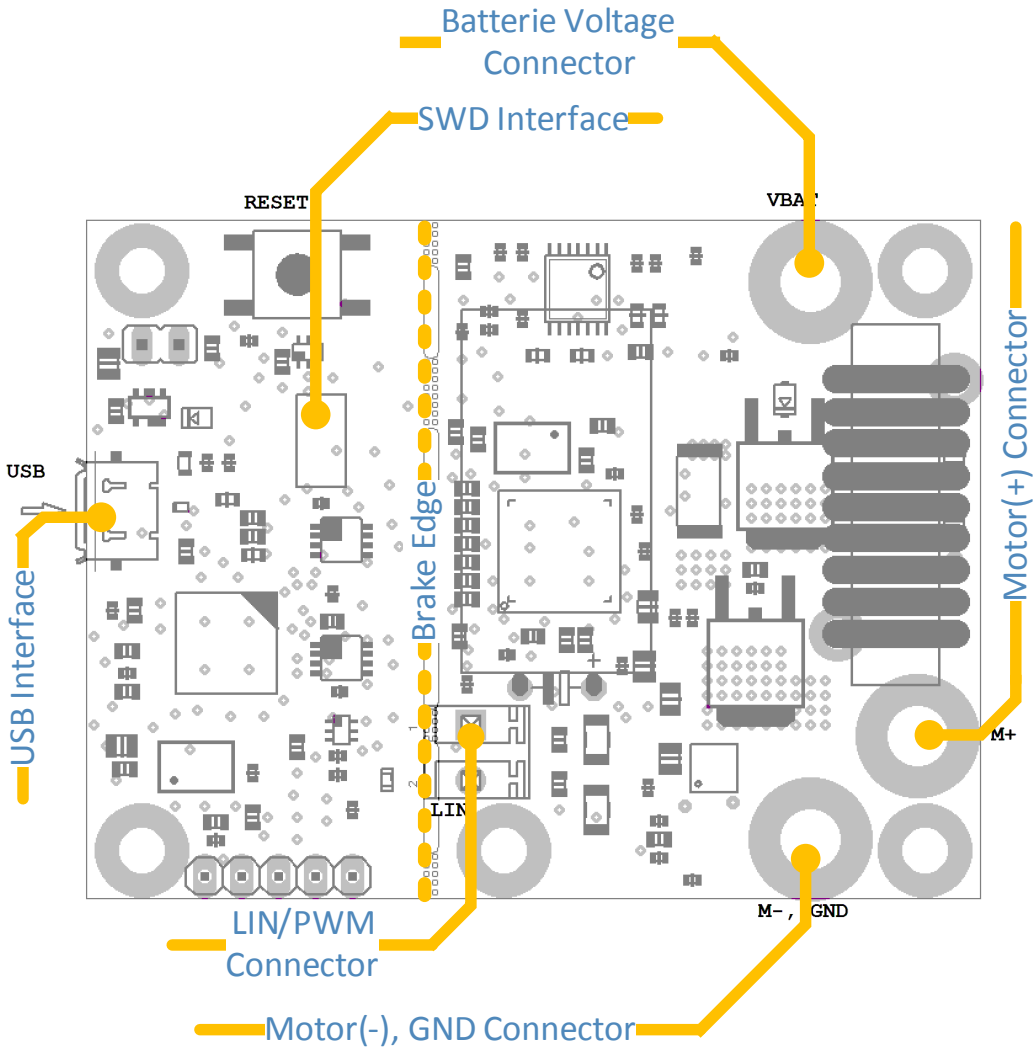

Figure 3 Interconnections Overview

2.5mm Screw Nut Connectors

Ground, voltagesupply (operating Voltage is documented in the datasheet) can be connected via 2.5mm Screw Nuts.
Motor contacts can also be accessed with 2.5mm screws. MOTOR(+) has a seperate connector. MOTOR(-) is shared with the GND connector.

LIN/PWM Connector

This connector is a direct access to the LIN/PWM Interface of the TLE9845QX. After Breaking the Debug-Interface. BSL-Mode can be used to perform programm updates via LIN Interface Chapter 3.

USB

An Onboard-debugger is implemented on the TLE9845QX Appkit. The USB-Connection provides a Debug- and Serial-interface to the PC. More information in .

SWD Interface

The SWD PIN-Header can be used optionally, instead of using the On-Board Debug Interface.

3 Communication Interfaces

3.1 LIN and uIO for LIN BSL

The device integrated LIN transceiver is connected to a dedicated Connector (see Figure 3). To integrate the device in a LIN network it is sufficient to use the single wire banana interface. The BSL interface is intended to program the device via LIN. For further information about the uIO interface see www.hitex.com/uio.

3.2 UART (Virtual COM PORT via USB)

A virtual COM port provided by Segger driver enables a PC – board – communication via UART. The UART2 module of TLE9845QX uses the pins P1.0 (transmit) and P1.1 (receive). Those are connected to the XMC4200, which emulates Rx and Tx on PC side with Segger firmware. Though they can be disconnected physically, bidirectional level shifters ensure that the XMC pins are hi-Z in case the virtual COM port is not used. By connecting the evaluation board to the PC a virtual COM port gets emulated by the Segger driver automatically. The virtual COM port will show up in the Microsoft® Windows® device manager.

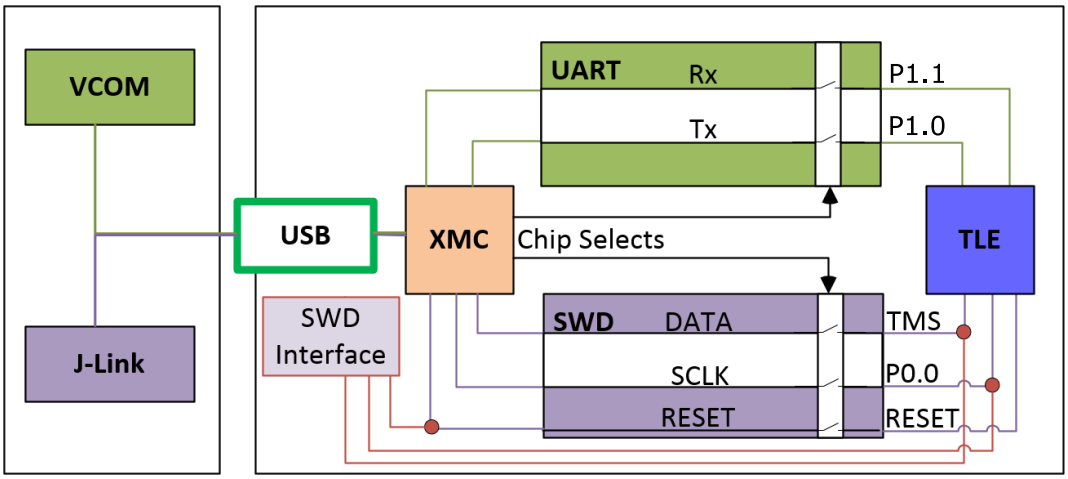

Figure 4 UART and Debugging

Note: Only one of the interfaces USB or SWD can be used at one time. While using the SWD interface the XMC is hold in reset. As long as a debugger is connected with the SWD interface it eliminates therefore debugging or UART via USB.

3.3 SWD-Debuginterface (J-Link via USB)

For serial wire debug the TLE984x uses the pins TMS (data) and P0.0 (clock). Level shifters between XMC4200 and TLE9845QX allow using P0.0, while it is not used for debugging.

The Segger J-Link module on board allows serial wire debugging via USB. Alternative debugging via SWD interface is possible to debug with another ISP than the onboard Segger e.g. U-Link2. Therefore the signals are routed through the 10 pin header SWD interface between the XMC4200 and the TLE984x. The pin configuration makes sure that the XMC is hold in reset while another debugger is physically connected to X11. The virtual COM port will be disabled, while the external ISP is connected.

4 Software Toolchain

4.1 Keil µVision 5

The recommended Integrated Software Developement Environment is Keil® µVision5®. Infineons embedded Power family is suported. For more information about the Toolchain go to: www.keil.com

4.2 Infineon Config Wizard

In addition to the IDE, Infineon® provides the ConfigWizard. The tool is designed for code configuration, in combination with the IDE. Infineons Config Wizard can be downloaded via:

www.infineon.com/embeddedpower

4.3 TLE9845QX Installation

All embedded Power products can be installed to Keil® µVision5® via "Pack Installer". Browsing to the Infineon chapter in "All Devices" will lead to the "TLE98xx Series". The ".pack" file comes with several code examples, to provide an easy start up and speed up software developement.

4.4 Debug Connection Setup

For a proper Flash and Debug Connection, Install V5.10 (or newer) from: www.segger.com/jlink-software.html

Keil® µVision5® has to be configured in the IDE Menu "Options for Target". After connecting the USB-cable and power up the Evalboard, go to the "Debug" register-card and choose "J-LINK / J-TRACE Cortex" and press "Settings".

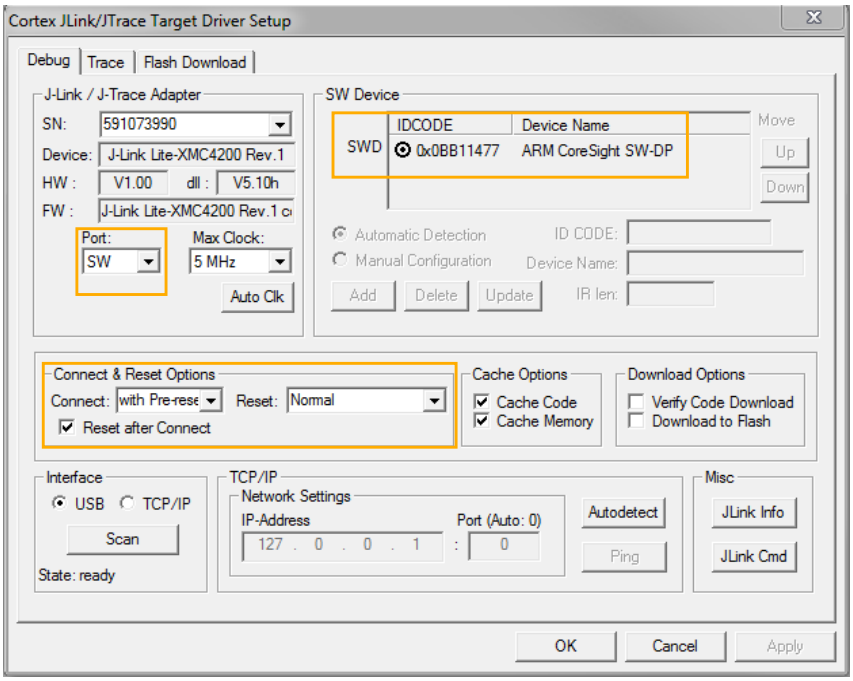

Figure 5 Debug and Flash Configuration

If the board has been connected successfully, the ARM IDCODE will be visible in the SW Device Window. If connection fails, "Connect & Reset Options" and "Port" window has to be checked.

4.5 GUI Description

4.5.1 General

The GUI (General User Interface) is a comfortable tool to control the functionality of the TLE9845 device over an USB interface.

The GUI-software was written in the programming language C# with MS Visual Studio 2015. The software will run under Windows 7, Windows 8 and Windows 10.

4.5.2 Open the GUI

The graphical user interface is shown in Figure 6. It can be downloaded at www.infineon.com/TLE984x.

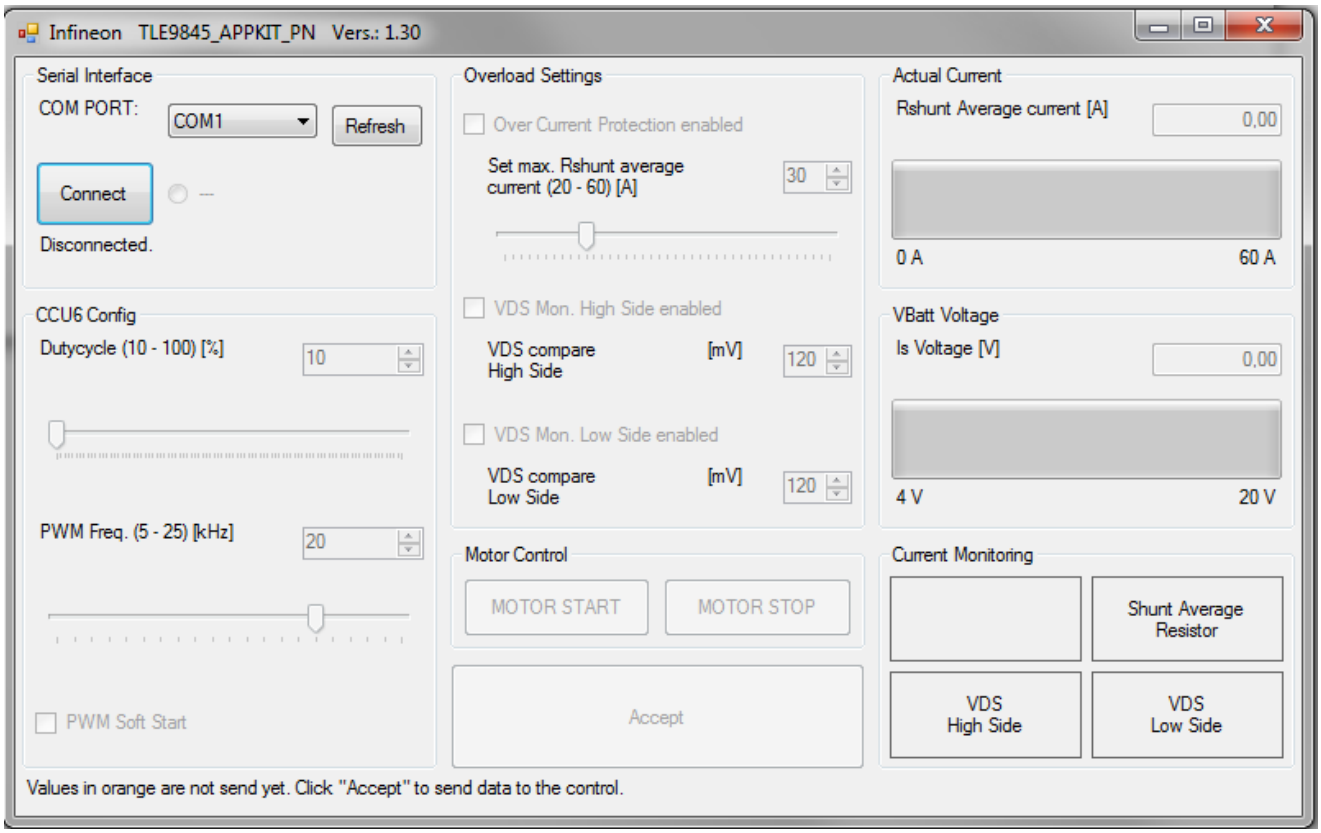

Figure 6 WindowsApplication_PN_130 GUI: Unconnected

4.5.3 Connecting to the TLE9845 Device

Click on Refresh and select the COM PORT. Press Connect:

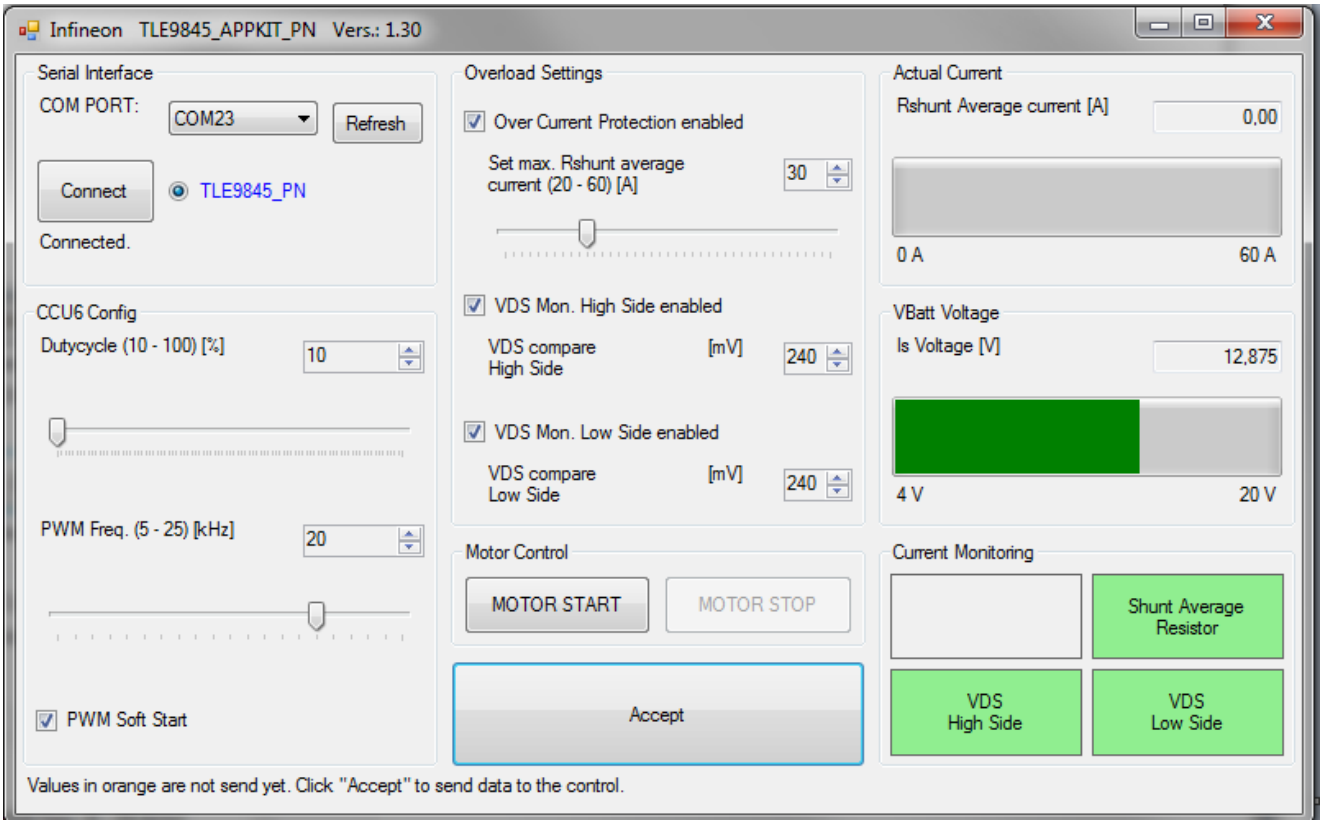

Figure 7 WindowsApplication_PN_130 GUI: Connected

The PN_Appkit is now connected and can be controlled. The GUI gives analog information over the average current, measured at the Shunt resistor and the Supply Voltage.

5 Schematic and Layout

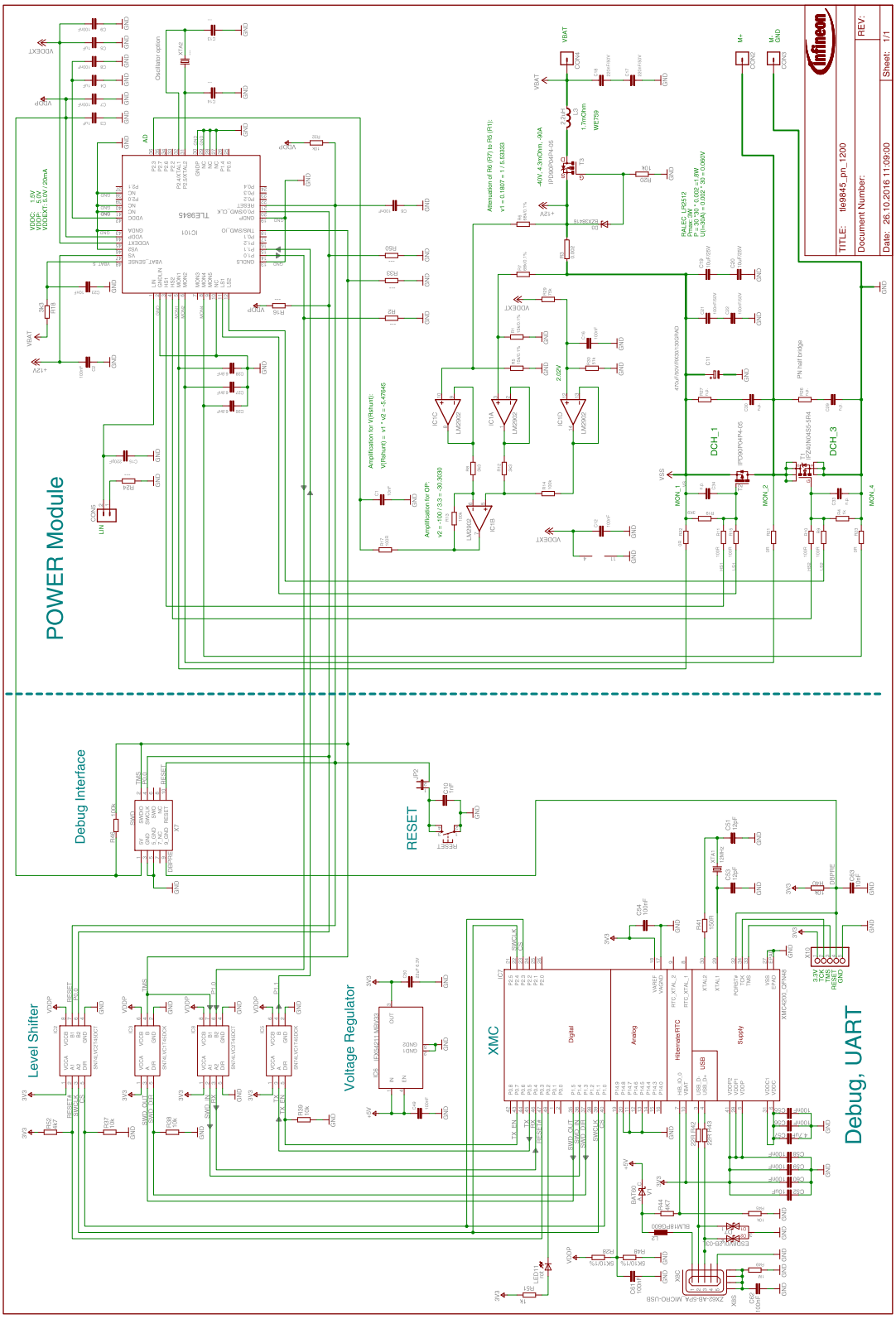

Figure 8 schematic sheet: TLE9845QX with PN-MOSFET halfbridge and On Board Debug Interface

Note: This is a very simplified example of an application circuit and bill of material. The function must be verified in the application.

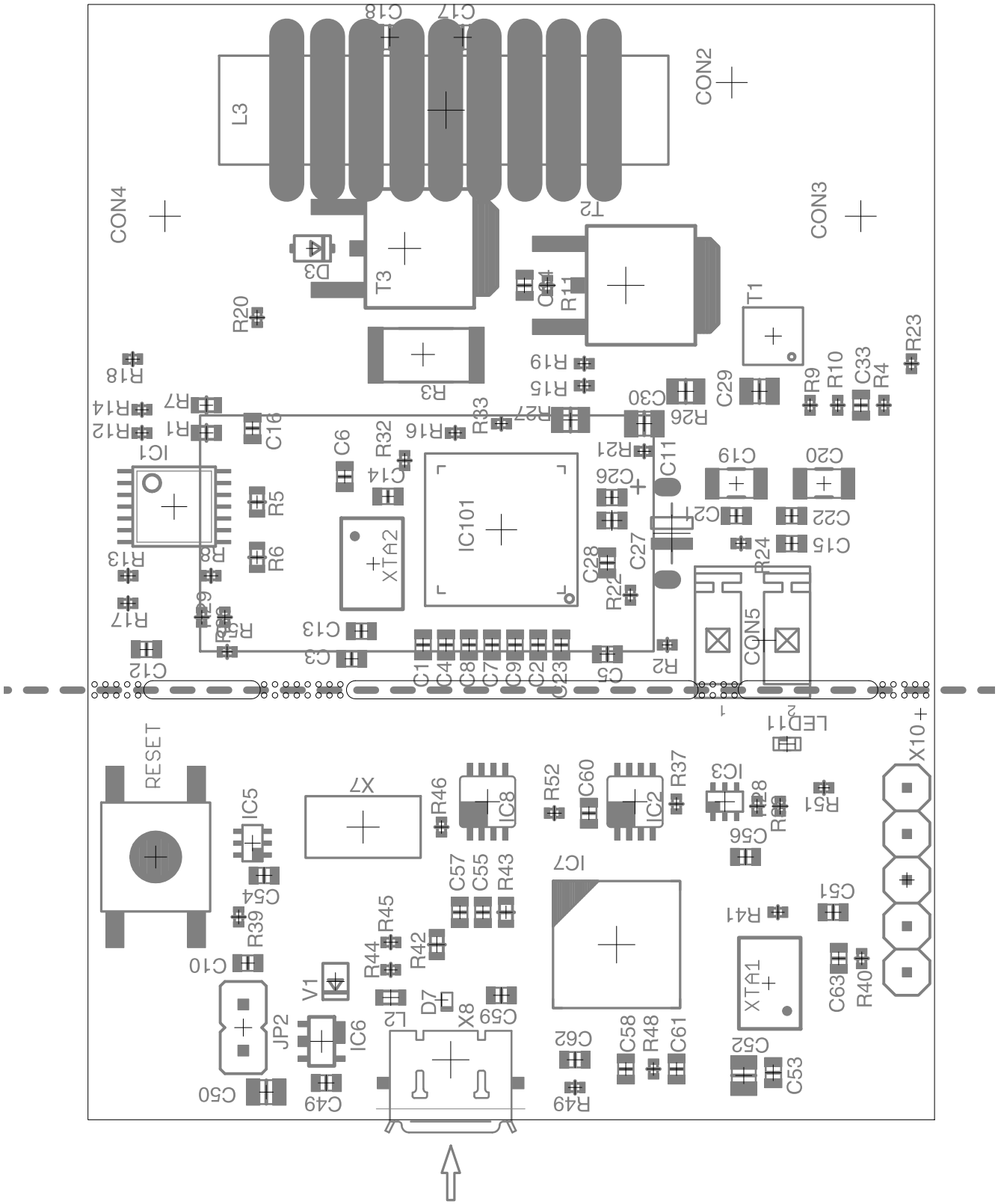

Figure 9 Parts placement

Note: This is a very simplified example of an application circuit and bill of material. The function must be verified in the application.

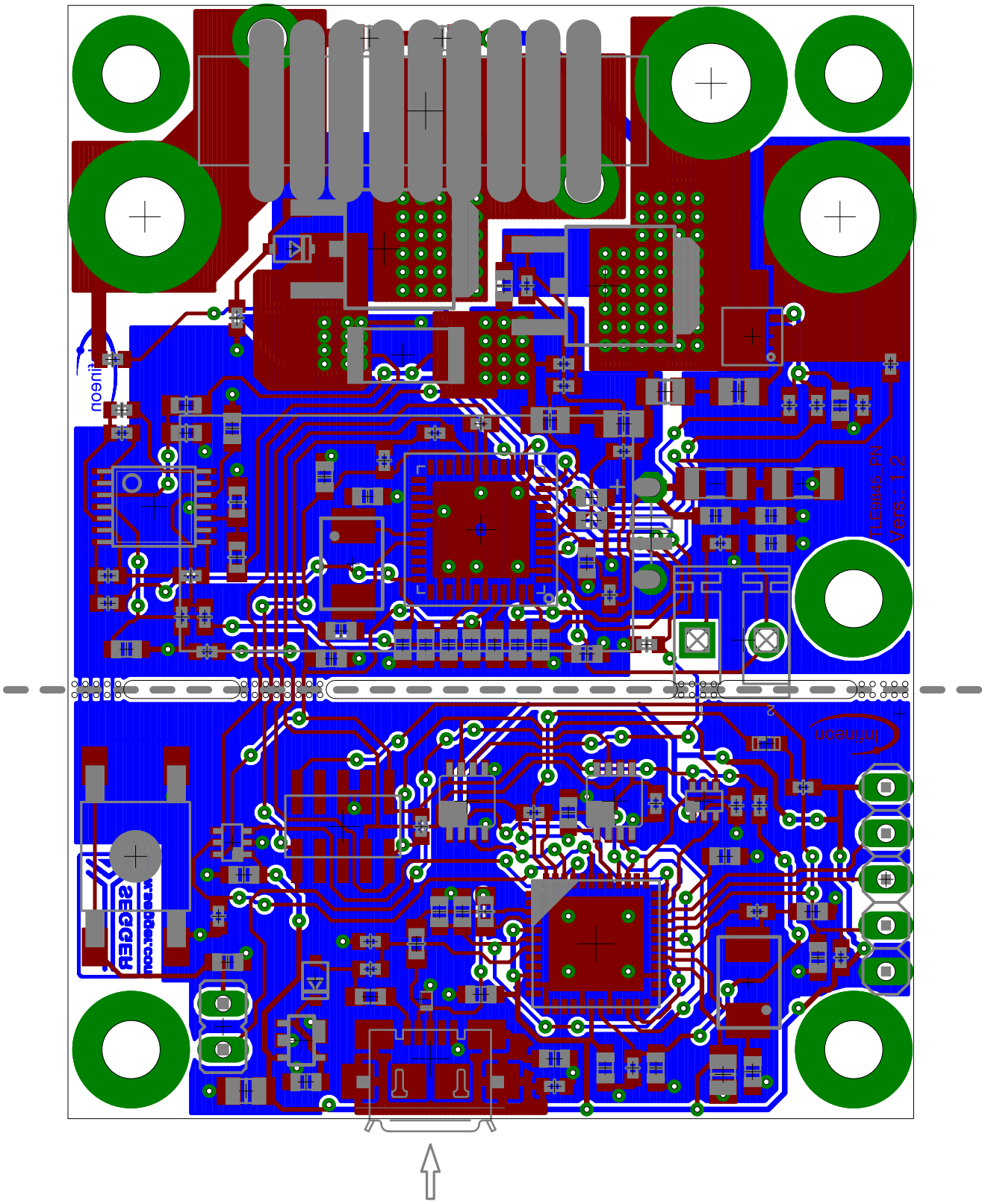

Figure 10 Layout

Note: This is a very simplified example of an application circuit and bill of material. The function must be verified in the application.

6 Revision History

Revision	Date	Changes
1.0	2017-02-02	Release State

Trademarks of Infineon Technologies AG
µHVIC™, µIPM™, µPFC™, AU-ConvertIR™, AURIX™, C166™, CanPAK™, CIPOS™, CIPURSE™, CoolDP™, CoolGaN™, COOLiR™, CoolMOS™, CoolSET™, CoolSiC™, DAVE™, DI-POL™, DirectFET™, DrBlade™, EasyPIM™, EconoBRIDGE™, EconoDUAL™, EconoPACK™, EconoPIM™, EiceDRIVER™, eupec™, FCOS™, GaNpowIR™, HEXFET™, HITFET™, HybridPACK™, iMOTION™, IRAM™, ISOFACE™, IsoPACK™, LEDrivIR™, LITIX™, MIPAQ™, ModSTACK™, my-d™, NovalithIC™, OPTIGA™, OptiMOS™, ORIGA™, PowIRaudio™, PowIRStage™, PrimePACK™, PrimeSTACK™, PROFET™, PRO-SIL™, RASIC™, REAL3™, SmartLEWIS™, SOLID FLASH™, SPOC™, StrongIRFET™, SupIRBuck™, TEMPFET™, TRENCHSTOP™, TriCore™, UHVIC™, XHP™, XMC™.

Trademarks updated November 2015

Other Trademarks
All referenced product or service names and trademarks are the property of their respective owners.

Edition 2017-02-02
Published by
Infineon Technologies AG
81726 Munich, Germany

© 2017 Infineon Technologies AG.
All Rights Reserved.

Do you have a question about any aspect of this document?
Email: erratum@infineon.com

Document reference

IMPORTANT NOTICE

The information contained in this application note is given as a hint for the implementation of the product only and shall in no event be regarded as a description or warranty of a certain functionality, condition or quality of the product. Before implementation of the product, the recipient of this application note must verify any function and other technical information given herein in the real application. Infineon Technologies hereby disclaims any and all warranties and liabilities of any kind (including without limitation warranties of non-infringement of intellectual property rights of any third party) with respect to any and all information given in this application note.

The data contained in this document is exclusively intended for technically trained staff. It is the responsibility of customer's technical departments to evaluate the suitability of the product for the intended application and the completeness of the product information given in this document with respect to such application.

For further information on technology, delivery terms and conditions and prices, please contact the nearest Infineon Technologies Office (www.infineon.com).

WARNINGS

Due to technical requirements products may contain dangerous substances. For information on the types in question please contact your nearest Infineon Technologies office.

Except as otherwise explicitly approved by Infineon Technologies in a written document signed by authorized representatives of Infineon Technologies, Infineon Technologies' products may not be used in any applications where a failure of the product or any consequences of the use thereof can reasonably be expected to result in personal injury.