TLE984xQX

Microcontroller with LIN and Power Switches for Automotive Applications

User's Manual

Rev. 1.0, 2016-06-20

Automotive Power

Table of Contents

1 Overview . . . 13
1.1 TLE984xQX product variants . . . 14
1.1.1 Basic product variants . . . 14
1.1.2 Special Product Variants . . . 14
1.2 Abbreviations . . . 15

2 Block Diagram . . . 17

3 Device Pinout and Pin Configuration . . . 18
3.1 Device Pinout . . . 18
3.2 Pin Configuration . . . 19

4 Modes of Operation . . . 22

5 Device Register Types . . . 25

6 Power Management Unit (PMU) . . . 26
6.1 Features . . . 26
6.2 Introduction . . . 26
6.2.1 Block Diagram . . . 27
6.2.2 PMU Modes Overview . . . 29
6.3 Power Supply Generation (PGU) . . . 35
6.3.1 Voltage Regulator 5.0V (VDDP) . . . 35
6.3.2 Voltage Regulator 1.5V (VDDC) . . . 37
6.3.3 External Voltage Regulator 5.0V (VDDEXT) . . . 38
6.3.4 Power-on Reset Concept . . . 39
6.3.5 PMU Register Overview . . . 40
6.3.6 Register Definition . . . 40
6.3.6.1 Power Supply Generation Register . . . 40
6.3.6.2 VDDEXT Control Register . . . 44
6.4 Power Control Unit . . . 46
6.4.1 Power Control Unit - Fail Safe Scenarios . . . 46
6.4.1.1 Power Supervision Function of PCU . . . 46
6.4.1.2 Watchdog (WDT1) Fail Safe . . . 47
6.4.1.3 Main Regulators Fail Safe . . . 47
6.4.1.4 VDDEXT Failure . . . 47
6.4.1.5 Wake-Up from Stop Mode with Reset Fail Safe . . . 47
6.4.1.6 Register Definition . . . 49
6.5 Wake-up Management Unit (WMU) . . . 52
6.5.1 Register Definition . . . 54
6.5.1.1 PMU Wake Up Configuration Register . . . 55
6.5.1.2 PMU Wake Up Status Register . . . 59
6.5.1.3 GPIO Port Wake Up Status Register . . . 61
6.6 Cyclic Management Unit (CMU) . . . 64
6.6.1 Cyclic Sense Mode . . . 64
6.6.1.1 Configuration of Cyclic Sense Mode . . . 65
6.6.2 Cyclic Wake Mode . . . 67
6.6.3 Register Definition . . . 67
6.6.3.1 Cyclic Mode Configuration Registers (CYCMU) . . . 68
6.7 Reset Management Unit (RMU) . . . 71
6.7.1 Register Definition . . . 74
6.7.1.1 Reset Management Unit Registers (RMU) . . . 75

6.8 PMU Data Storage Area . . . 79
6.8.1 Register Definition . . . 79
6.8.1.1 Data Storage Registers . . . 79

7 System Control Unit - Digital Modules (SCU-DM) . . . 82
7.1 Features . . . 82
7.2 Introduction . . . 82
7.2.1 Block Diagram . . . 83
7.2.2 SCU Register Overview . . . 85
7.2.2.1 Register Map . . . 85
7.3 Clock Generation Unit . . . 88
7.3.1 Low Precision Clock . . . 88
7.3.2 High Precision Oscillator Circuit (OSC_HP) . . . 88
7.3.2.1 External Input Clock Mode . . . 89
7.3.2.2 External Crystal Mode . . . 89
7.3.3 Phase-Locked Loop (PLL) Module . . . 89
7.3.3.1 Features . . . 90
7.3.3.2 PLL Functional Description . . . 90
7.3.3.3 Oscillator Watchdog . . . 95
7.3.3.4 PLL VCO Lock Detection . . . 96
7.3.3.5 Internal Oscillator (OSC_PLL) . . . 96
7.3.3.6 Switching PLL Parameters . . . 96
7.3.3.7 Oscillator Watchdog Event or PLL Loss of Lock Detection . . . 97
7.3.3.8 Oscillator Watchdog Event or Loss of Lock Recovery . . . 97
7.3.4 Clock Control Unit . . . 98
7.3.4.1 Clock Tree . . . 100
7.3.4.2 Startup Control for System Clock . . . 101
7.3.5 External Clock Output . . . 101
7.3.6 CGU Registers . . . 102
7.3.6.1 PLL Oscillator Register . . . 102
7.3.6.2 PLL Registers . . . 103
7.3.6.3 System Clock Control Registers . . . 110
7.3.6.4 Analog Peripherals Clock Control Registers . . . 112
7.3.6.5 External Clock Control Register . . . 120
7.4 Reset Control . . . 122
7.4.1 Types of Reset . . . 122
7.4.2 Overview . . . 122
7.4.3 Module Reset Behavior . . . 122
7.4.4 Functional Description of Reset Types . . . 124
7.4.4.1 Power-On / Brown-out Reset . . . 124
7.4.4.2 Wake-up Reset . . . 124
7.4.4.3 Hardware Reset . . . 124
7.4.4.4 WDT1 Reset . . . 124
7.4.4.5 WDT / Soft Reset . . . 124
7.4.5 Reset Register Description . . . 125
7.4.6 Booting Scheme . . . 125
7.5 Power Management . . . 127
7.5.1 Overview . . . 127
7.5.2 Functional Description . . . 128
7.5.2.1 Slow Down Mode . . . 128
7.5.2.2 Stop Mode . . . 128
7.5.2.3 Sleep Mode . . . 130

7.5.3 Register Description . . . 131
7.6 Interrupt Management . . . 133
7.6.1 Overview . . . 133
7.6.1.1 External Interrupts . . . 133
7.6.1.2 Extended Interrupts . . . 134
7.6.2 Interrupt Node Assignment . . . 134
7.6.3 Interrupt Registers . . . 136
7.6.3.1 Interrupt Node Enable Registers . . . 137
7.6.3.2 External Interrupt Control Registers . . . 141
7.6.3.3 Interrupt Flag Registers (this register are just doubled for register generation) . . . 145
7.6.4 Interrupt Related Registers . . . 169
7.6.4.1 Interrupt Event Enable Control . . . 169
7.6.5 NMI Event Flags Handling . . . 176
7.7 General Port Control . . . 177
7.7.1 Input Pin Function Selection . . . 177
7.7.2 Port Output Control . . . 183
7.7.3 GPT12 T3IN/T4IN Input Pin Function Selection . . . 189
7.8 Differential Unit Trigger Enable (only TLE9845QX) . . . 190
7.8.1 Differential Unit Trigger . . . 190
7.8.1.1 Differential Unit Trigger register . . . 190
7.9 Flexible Peripheral Management . . . 193
7.9.1 Peripheral Management Registers . . . 193
7.10 Module Suspend Control . . . 195
7.11 Baud-rate Generator . . . 197
7.11.1 Baudrate Generator Registers . . . 197
7.11.1.1 Baud-rate Generator Control and Status Registers . . . 197
7.11.1.2 Baud-rate Generator Timer/Reload Registers . . . 199
7.12 LIN Break and Sync Byte Detection . . . 204
7.12.1 LIN Break and Sync Byte Detection Control . . . 204
7.12.1.1 LIN Break and Sync Byte Registers . . . 204
7.13 Error Detection and Correction Control for Memories . . . 206
7.13.1 Error Detection and Correction Control Register . . . 207
7.13.2 Error Detection and Correction Status Register . . . 208
7.14 Miscellaneous Control . . . 211
7.14.1 Bit Protection Register . . . 211
7.14.2 System Control and Status Registers . . . 212

8 System Control Unit - Power Modules (SCU-PM) . . . 221
8.1 Description of the Power Modules System Control Unit . . . 221
8.2 Introduction . . . 221
8.2.1 Block Diagram . . . 221
8.3 Clock Watchdog Unit (CWU) . . . 222
8.3.1 Fail Safe Functionality of Clock Generation Unit (Clock Watchdog) . . . 222
8.3.1.1 Functional Description of Clock Watchdog Module . . . 223
8.3.2 Clock Generation Unit Register . . . 224
8.4 Interrupt Control Unit (ICU) . . . 227
8.4.1 Structure of PREWARN_SUP_NMI . . . 227
8.4.2 Interrupt Control Unit Status Register . . . 229
8.4.2.1 Interrupt Control Unit Status Overview Register . . . 229
8.4.2.2 Interrupt Control Unit - Interrupt Clear Register . . . 236
8.4.2.3 Interrupt Control Unit - Interrupt Enable Register . . . 240
8.5 Power Control Unit for Power Modules (PCU_PM) . . . 243

8.5.1 VS-Overvoltage System Shutdown . . . 244
8.5.2 Overtemperature System Shutdown . . . 245
8.5.3 Power Control Unit Register . . . 247

9 ARM Cortex-M0 Core . . . 250
9.1 Features . . . 250
9.2 Introduction . . . 251
9.2.1 Block Diagram . . . 251
9.3 Functional Description . . . 251
9.3.1 Registers . . . 252
9.3.1.1 General-Purpose Registers . . . 252
9.3.1.2 Special-Purpose Registers . . . 252
9.4 Summary of Processor Registers . . . 254
9.5 Instruction Set Summary . . . 282

10 Address Space Organization . . . 285

11 Memory Control Unit . . . 289
11.1 Features . . . 289
11.2 Introduction . . . 289
11.2.1 Block Diagram . . . 289
11.3 NVM Module (Flash Memory) . . . 291
11.4 BootROM Module . . . 291
11.4.1 BootROM Addressing . . . 291
11.4.2 BootROM Firmware Program Structure . . . 291
11.5 RAM Module . . . 292
11.5.1 RAM Addressing . . . 292
11.6 Memory Protection Unit (MPU) . . . 293
11.6.1 Memory Protection Regions . . . 293
11.6.2 Hardware Protection Mode . . . 293
11.6.2.1 BootROM Protection Mode . . . 294
11.6.2.2 NVM Protection Modes . . . 295
11.6.3 Firmware Protection Mode . . . 300
11.7 Core Protection Mode . . . 302

12 NVM Module (Flash Memory) . . . 303
12.1 Definitions . . . 304
12.1.1 General Definitions . . . 304
12.2 Functional Description . . . 306
12.2.1 Basic Block Functions . . . 306
12.2.2 Memory Cell Array . . . 307
12.2.3 SFR Accesses . . . 308
12.2.4 Memory Read . . . 308
12.2.5 Memory Write . . . 309
12.2.6 Timing . . . 309
12.2.7 Verify . . . 309
12.2.8 Tearing-Safe Programming . . . 309
12.2.9 Dynamic Address Scrambling . . . 309
12.2.10 Linearly Mapped Sectors . . . 310
12.2.11 Disturb Handling . . . 310
12.2.12 Hot Spot Distribution . . . 311
12.2.13 Properties of Error Correcting Code (ECC) . . . 311
12.2.14 Resume from disturbed Program/Erase operation . . . 311
12.2.15 Code and Data Access through the AHB-Lite Interface . . . 312

13 Interrupt System . . . 313
13.1 Features . . . 313
13.2 Introduction . . . 313
13.2.1 Overview . . . 313
13.3 Functional Description . . . 315
13.3.1 Interrupt Node Assignment . . . 315
13.3.1.1 Interrupt Node 0 and 1 - GPT12 Timer Module . . . 315
13.3.1.2 Interrupt Node 2 - Measurement Unit . . . 317
13.3.1.3 Interrupt Node 3 - ADC10 . . . 318
13.3.1.4 Interrupt Node 4, 5, 6, 7 - CCU6 . . . 320
13.3.1.5 Interrupt Node 8 and 9 - SSC . . . 321
13.3.1.6 Interrupt Node 10 - UART1 . . . 322
13.3.1.7 Interrupt Node 11 - UART2 . . . 323
13.3.1.8 Interrupt Node 12 and 13 - Interrupt . . . 324
13.3.1.9 Interrupt Node 17 and 18 - LS1, LS2 . . . 325
13.3.1.10 Interrupt Node 19 and 20 - HS1, HS2 . . . 326
13.3.1.11 Interrupt Node 21 - DPP1 . . . 327
13.3.1.12 Interrupt Node 22 - MON1..5 . . . 328
13.3.1.13 Interrupt Node 23 - Port2.x . . . 330
13.3.1.14 Non-Maskable Interrupt Request Source (NMI) . . . 331
13.3.1.15 Interrupt Flags Overview . . . 332
13.4 Interrupt Structure . . . 339
13.4.1 Interrupt Structure 1 . . . 339
13.5 Interrupt Source and Vector . . . 340
13.6 Interrupt Priority . . . 343
13.7 Interrupt Handling . . . 344
13.8 Interrupt Registers . . . 345
13.8.1 Interrupt Node Enable Registers . . . 346
13.8.2 External Interrupt Control Registers . . . 348
13.8.3 Interrupt Flag Registers . . . 352
13.9 Interrupt Priority Registers . . . 377

14 Watchdog Timer (WDT1) . . . 378
14.1 Features . . . 378
14.2 Introduction . . . 379
14.3 Functional Description . . . 379
14.3.1 Modes of Operation . . . 379
14.3.2 Normal Operation . . . 380
14.3.2.1 Watchdog Register Overview . . . 382

15 GPIO Ports and Peripheral I/O . . . 384
15.1 Features . . . 384
15.2 Introduction . . . 384
15.2.1 Port 0 and Port 1 . . . 385
15.2.2 Port 2 . . . 387
15.3 General Port Register Description . . . 387
15.3.1 Port Data Register . . . 389
15.3.2 Direction Register . . . 390
15.3.3 Open Drain Control Register . . . 392
15.3.4 Pull-Up/Pull-Down Device Register . . . 393
15.3.5 Alternate Input Functions . . . 396
15.3.6 Alternate Output Functions . . . 396

15.3.7 Port Output Control . . . 397
15.4 TLE984xQX Port Implementation Details . . . 400
15.4.1 Port 0 . . . 400
15.4.1.1 Overview . . . 400
15.4.1.2 Port 0 Functions . . . 400
15.4.1.3 Port 0 Register Description . . . 403
15.4.2 Port 1 . . . 414
15.4.2.1 Overview . . . 414
15.4.2.2 Port 1 Functions . . . 414
15.4.2.3 Port 1 Register Description . . . 416
15.4.3 Port 2 . . . 426
15.4.3.1 Overview . . . 426
15.4.3.2 Port 2 Functions . . . 426
15.4.3.3 Port 2 Register Description . . . 429
16 General Purpose Timer Units (GPT12) . . . 434
16.1 Features . . . 434
16.1.1 Features Block GPT1 . . . 434
16.1.2 Features Block GPT2 . . . 434
16.2 Introduction . . . 434
16.2.1 Block Diagram GPT1 . . . 435
16.2.2 Block Diagram GPT2 . . . 436
16.3 Timer Block GPT1 . . . 437
16.3.1 GPT1 Core Timer T3 Control . . . 438
16.3.2 GPT1 Core Timer T3 Operating Modes . . . 440
16.3.3 GPT1 Auxiliary Timers T2/T4 Control . . . 446
16.3.4 GPT1 Auxiliary Timers T2/T4 Operating Modes . . . 447
16.3.5 GPT1 Clock Signal Control . . . 454
16.3.6 Interrupt Control for GPT1 Timers . . . 456
16.3.7 GPT12 Registers . . . 457
16.3.8 GPT1 Registers . . . 457
16.3.8.1 GPT1 Timer Registers . . . 457
16.3.8.2 GPT1 Core Timer T3 Control Register . . . 459
16.3.8.3 GPT1 Auxiliary Timers T2/T4 Control Registers . . . 461
16.3.8.4 Encoding . . . 464
16.3.8.5 GPT1 Timer Interrupt Control Registers . . . 465
16.4 Timer Block GPT2 . . . 466
16.4.1 GPT2 Core Timer T6 Control . . . 467
16.4.2 GPT2 Core Timer T6 Operating Modes . . . 468
16.4.3 GPT2 Auxiliary Timer T5 Control . . . 471
16.4.4 GPT2 Auxiliary Timer T5 Operating Modes . . . 472
16.4.5 GPT2 Register CAPREL Operating Modes . . . 475
16.4.6 GPT2 Clock Signal Control . . . 480
16.4.7 Interrupt Control for GPT2 Timers and CAPREL . . . 481
16.4.8 GPT2 Registers . . . 482
16.4.8.1 GPT2 Timer Registers . . . 482
16.4.8.2 GPT2 Timer Control Registers . . . 483
16.4.8.3 Encoding . . . 486
16.4.8.4 GPT2 Timer and CAPREL Interrupt Control Registers . . . 487
16.5 Miscellaneous GPT12 Registers . . . 488
16.6 Implementation of the GPT12 Module . . . 491
16.6.1 Module Connections . . . 491

17 Timer2 and Timer21 . . . 494
17.1 Features . . . 494
17.2 Introduction . . . 494
17.2.1 Timer2 and Timer21 Modes Overview . . . 494
17.3 Functional Description . . . 495
17.3.1 Auto-Reload Mode . . . 495
17.3.1.1 Up/Down Count Disabled . . . 495
17.3.1.2 Up/Down Count Enabled . . . 496
17.3.2 Capture Mode . . . 498
17.3.3 Count Clock . . . 498
17.3.4 Interrupt Generation . . . 499
17.4 Timer 2 Register Definition . . . 499
17.4.1 Mode Register . . . 499
17.4.2 Control Register . . . 502
17.4.3 Timer 2 Reload/Capture Register . . . 505
17.4.4 Timer 2 Count Register . . . 506
17.5 Timer2 and Timer21 Implementation Details . . . 507
17.5.1 Interfaces of the Timer2 and Timer21 . . . 507

18 Capture/Compare Unit 6 (CCU6) . . . 509
18.1 Feature Set Overview . . . 509
18.2 Introduction . . . 510
18.2.1 Block Diagram . . . 510
18.3 Operating Timer T12 . . . 512
18.3.1 T12 Overview . . . 513
18.3.2 T12 Counting Scheme . . . 515
18.3.2.1 Clock Selection . . . 515
18.3.2.2 Edge-Aligned / Center-Aligned Mode . . . 516
18.3.2.3 Single-Shot Mode . . . 518
18.3.3 T12 Compare Mode . . . 519
18.3.3.1 Compare Channels . . . 519
18.3.3.2 Channel State Bits . . . 519
18.3.3.3 Hysteresis-Like Control Mode . . . 524
18.3.4 Compare Mode Output Path . . . 525
18.3.4.1 Dead-Time Generation . . . 525
18.3.4.2 State Selection . . . 527
18.3.4.3 Output Modulation and Level Selection . . . 528
18.3.5 T12 Capture Modes . . . 530
18.3.6 T12 Shadow Register Transfer . . . 534
18.3.7 Timer T12 Operating Mode Selection . . . 535
18.4 Operating Timer T13 . . . 535
18.4.1 T13 Overview . . . 536
18.4.2 T13 Counting Scheme . . . 538
18.4.2.1 Clock Selection . . . 538
18.4.2.2 T13 Counting . . . 539
18.4.2.3 Single-Shot Mode . . . 539
18.4.2.4 Synchronization to T12 . . . 540
18.4.3 T13 Compare Mode . . . 542
18.4.4 Compare Mode Output Path . . . 544
18.4.5 T13 Shadow Register Transfer . . . 545
18.5 Trap Handling . . . 547
18.6 Multi-Channel Mode . . . 549

18.7 Hall Sensor Mode . . . 551
18.7.1 Hall Pattern Evaluation . . . 552
18.7.2 Hall Pattern Compare Logic . . . 554
18.7.3 Hall Mode Flags . . . 554
18.7.4 Hall Mode for Brushless DC-Motor Control . . . 556
18.8 Interrupt Handling . . . 558
18.8.1 Interrupt Structure . . . 558
18.9 General Module Operation . . . 560
18.9.1 Input Selection . . . 560
18.10 CCU6 Register Description . . . 561
18.10.1 System Registers . . . 562
18.10.2 Timer 12 – Related Registers . . . 565
18.10.3 Timer 13 – Related Registers . . . 577
18.10.4 Capture/Compare Control Registers . . . 580
18.10.5 Global Modulation Control Registers . . . 595
18.10.6 Multi-Channel Modulation Control Registers . . . 600
18.10.7 Interrupt Control Registers . . . 606
18.11 TLE984xQX Module Implementation Details . . . 617
18.11.1 Interfaces of the CCU6 Module . . . 617

19 UART1/UART2 . . . 619
19.1 Features . . . 619
19.2 Introduction . . . 619
19.2.1 Block Diagram . . . 620
19.3 UART Modes . . . 620
19.3.1 Mode 0, 8-Bit Shift Register, Fixed Baud Rate . . . 620
19.3.2 Mode 1, 8-Bit UART, Variable Baud Rate . . . 621
19.3.3 Mode 2, 9-Bit UART, Fixed Baud Rate . . . 623
19.3.4 Mode 3, 9-Bit UART, Variable Baud Rate . . . 623
19.4 Multiprocessor Communication . . . 625
19.5 Interrupts . . . 625
19.6 Baud Rate Generation . . . 626
19.6.1 Baud Rate Generator . . . 626
19.7 LIN Support in UART . . . 628
19.7.1 LIN Protocol . . . 628
19.7.2 LIN Header Transmission . . . 629
19.7.3 Automatic Synchronization to the Host . . . 629
19.7.4 Initialization of Break/Sync Field Detection Logic . . . 630
19.7.5 Baud Rate Range Selection . . . 630
19.7.6 LIN Baud Rate Detection . . . 632
19.8 Register Description . . . 633
19.8.1 UART Registers . . . 633
19.8.2 Baud-rate Generator Control and Status Registers . . . 637
19.9 Interfaces of the UART Module . . . 638

20 LIN Transceiver . . . 640
20.1 Features . . . 640
20.2 Introduction . . . 640
20.2.1 Block Diagram . . . 641
20.3 Functional Description . . . 641
20.3.1 LIN Normal Mode . . . 641
20.3.2 LIN Transceiver Error Handling . . . 644

20.3.3 Slope Modes . . . 644
20.3.4 LIN Transceiver Status for Mode Selection . . . 645
20.3.5 LIN Transceiver Slope Mode Status . . . 645
20.4 Register Definition . . . 647
20.5 LIN Transceiver Interrupts . . . 652

21 High-Speed Synchronous Serial Interface SSC1/SSC2 . . . 654
21.1 Features . . . 654
21.2 Introduction . . . 654
21.2.1 Block Diagram . . . 655
21.3 Functional Description . . . 655
21.3.1 SSC1 and SSC2 Mode Overview . . . 655
21.3.2 Operating Mode Selection . . . 656
21.3.3 Full-Duplex Operation . . . 657
21.3.4 Half-Duplex Operation . . . 660
21.3.5 Continuous Transfers . . . 660
21.3.5.1 Port Control . . . 661
21.3.6 Baud Rate Generation . . . 662
21.3.7 Error Detection Mechanisms . . . 663
21.4 Interrupts . . . 665
21.5 SSC Kernel Registers . . . 666
21.5.1 Port Input Select Register . . . 666
21.5.2 Configuration Register . . . 667
21.5.3 Baud Rate Timer Reload Register . . . 671
21.5.4 Transmitter Buffer Register . . . 673
21.5.5 Receiver Buffer Register . . . 673
21.6 Output multiplexing . . . 674

22 Measurement Unit . . . 675
22.1 Features . . . 675
22.2 Introduction . . . 675
22.2.1 Block Diagram . . . 675
22.2.2 Measurement Unit Register Overview . . . 676
22.3 8 Bit - 10 Channel ADC Core . . . 677
22.3.1 8 Bit ADC Channel Allocation . . . 677
22.3.2 Transfer Characteristics of ADC2 . . . 677
22.3.3 Detailed ADC2 Measurement Channel Description . . . 678
22.3.4 8 Bit - 10 Channel Control Register . . . 678
22.4 10 Bit - 12 Channel ADC Core . . . 679
22.4.1 10 Bit ADC Channel Allocation . . . 679
22.5 Central and PMU Regulator Temperature Sensor . . . 681
22.5.1 Temperature Sensor Control Register . . . 681
22.6 Supplement Modules . . . 683
22.6.1 Functional Safety Concept . . . 683
22.6.2 Supplement Modules Control and Status Register . . . 684

23 Measurement Core Module (incl. ADC2) . . . 686
23.1 Features . . . 686
23.2 Introduction . . . 686
23.2.1 Block Diagram . . . 686
23.2.2 Measurement Core Module Modes Overview . . . 687
23.3 ADC2 - Core (8-bit ADC) . . . 688
23.3.1 Functional Description . . . 688

23.3.2 ADC2 Control Registers . . . 689
23.4 Channel Controller . . . 693
23.4.1 Functional Description . . . 693
23.4.2 Channel Controller Control Registers . . . 695
23.5 Calibration Unit . . . 708
23.5.1 Functional Description . . . 708
23.5.1.1 Method for determining the Calibration Parameters . . . 708
23.5.1.2 Setup of Calibration Unit . . . 708
23.5.2 Calibration Unit Control Registers . . . 710
23.6 IIR-Filter . . . 714
23.6.1 Functional Description . . . 714
23.6.1.1 Step Response . . . 715
23.6.2 IIR Filter Control Registers . . . 717
23.7 Signal Processing . . . 726
23.7.1 Functional Description . . . 726
23.7.2 Postprocessing Control Registers . . . 728
23.8 Start-up Behavior after Reset . . . 745
23.9 Postprocessing Default Values . . . 745

24 10-Bit Analog Digital Converter (ADC1) . . . 746
24.1 Features . . . 746
24.2 Introduction . . . 747
24.2.1 Block Diagram . . . 747
24.2.2 ADC1 Modes Overview . . . 747
24.3 ADC1 - Core (10-Bit ADC) . . . 749
24.3.1 Functional Description . . . 749
24.3.2 ADC1 Control and Status Registers . . . 750
24.4 ADC - Trigger Unit . . . 755
24.5 Channel Controller . . . 756
24.5.1 Functional Description . . . 756
24.5.2 Channel Controller Control Registers . . . 758
24.6 Calibration Unit . . . 786
24.6.1 Functional Description . . . 786
24.6.1.1 Method for determining the Calibration Parameters . . . 786
24.6.1.2 Setup of Calibration Unit . . . 786
24.6.2 Calibration Unit Control Registers . . . 788
24.7 IIR-Filter . . . 795
24.7.1 Functional Description . . . 795
24.7.1.1 Step Response . . . 796
24.7.2 IIR Filter Control Registers . . . 798
24.8 Signal Processing . . . 839
24.8.1 Functional Description . . . 839
24.8.2 Postprocessing Control Registers . . . 841
24.9 Interrupt Handling . . . 872
24.9.1 Functional Description . . . 872
24.9.2 Interrupt Registers . . . 877
24.10 Differential Measurement Unit (only TLE9845QX) . . . 903
24.10.1 Motivation for Differential Measurement Unit . . . 903
24.10.2 Implementation of Differential Measurement Unit . . . 903
24.10.3 ADC1 Differential Unit Input Selection Register . . . 907
24.11 Start-up Behavior after Reset . . . 910
24.12 Postprocessing Default Values . . . 911

25 High-Voltage Monitor Input . . . 912
25.1 Features . . . 912
25.2 Introduction . . . 912
25.2.1 Block Diagram . . . 912
25.2.2 Functional Description . . . 913
25.3 Register Definition . . . 915
25.3.1 Monitor Input Registers . . . 915

26 High-Side Switch . . . 921
26.1 Features . . . 921
26.2 Introduction . . . 922
26.2.1 Block Diagram . . . 922
26.2.2 General . . . 922
26.3 Functional Description . . . 922
26.3.1 Normal Operation . . . 923
26.3.1.1 Slew Rate Configuration . . . 923
26.3.1.2 Overcurrent Detection . . . 923
26.3.1.3 Overtemperature Detection . . . 923
26.3.1.4 ON-State Open Load Detection . . . 923
26.3.2 PWM Operation . . . 923
26.3.3 Cyclic Switching in Low Power Mode . . . 924
26.4 Register Definition . . . 925
26.4.1 High-Side Switch Register . . . 925
26.5 Interrupt Generation - and Status Bit Logic . . . 934
26.6 Application Information . . . 935

27 Low-Side Switch . . . 937
27.1 Features . . . 937
27.2 Functional Description . . . 938
27.2.1 Normal Operation . . . 938
27.2.1.1 Slew Rate Configuration . . . 939
27.2.1.2 Overcurrent Detection . . . 939
27.2.1.3 Overtemperature Detection . . . 939
27.2.2 Operation of Low-Side Switch in PWM Mode . . . 939
27.2.2.1 Application Requirement for Low-Side Switch in PWM Mode . . . 940
27.3 Register Definition . . . 941
27.3.1 Low-Side Switches Registers . . . 941
27.4 Interrupt Generation - and Status Bit Logic . . . 952

28 Application Information . . . 954
28.1 Relay Window Lift Application diagram . . . 954
28.2 Motor Drive with P/N-channel Power MOSFET Half Bridge Application (only TLE9845QX) . . . 956
28.2.1 P/N-channel Half Bridge Application diagram . . . 956
28.2.2 Functional description . . . 956
28.2.2.1 Gate Driver Stages . . . 956
28.2.2.2 PWM operation . . . 957
28.2.2.3 MOSFET protection with integrated Differential Units for drain-source-monitoring . . . 957
28.3 Connection of N.C. / N.U. pins . . . 957
28.4 Connection of unused pins . . . 957
28.5 Connection of P0.2 for SWD debug mode . . . 958
28.6 Connection of TMS . . . 958
28.7 ESD Immunity According to IEC61000-4-2 . . . 958

29 Revision History . . . 960

1 Overview

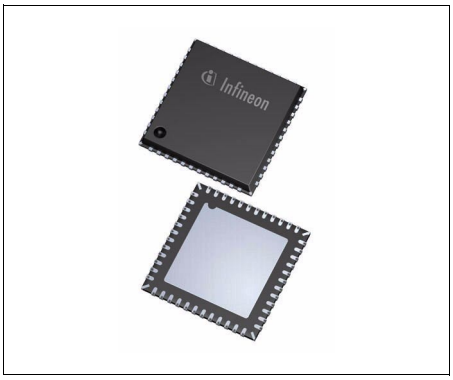

VQFN-48-31

Summary of Features

- 32-bit ARM Cortex-M0 Core
  - up to 25 MHz or 40 MHz (product variant dependant) clock frequency
  - one clock per machine cycle architecture
  - single cycle multiplier
- On-chip memory
  - 36 KB / 48 KB / 64 KB (product variant dependant) Flash (including EEPROM)
  - 4 KB EEPROM (emulated in Flash)
  - 768 bytes 100 Time Programmable Memory (100TP)
  - 2 KB / 4 KB (product variant dependant) RAM
  - Boot ROM for startup firmware and Flash routines
- On-chip OSC
- 2 Low-Side Switches incl. PWM functionality, can be used e.g. as relay driver
- 1 or 2 (product variant dependant) High-Side Switches with cyclic sense option and PWM functionality, e.g. for supplying LEDs or switch panels (min. 150 mA)
- 4 or 5 (product variant dependant) High Voltage Monitor Input pins for wake-up and with cyclic sense with analog measurement option
- 10 General-purpose I/O Ports (GPIO)
- 6 Analog input Ports
- 10-Bit A/D Converter with 6 analog inputs + VBAT_SENSE + VS + 4 or 5 (product variant dependant) high voltage monitoring inputs
- 8-Bit A/D Converter with 7 inputs for voltage and temperature supervision
- Measurement unit with 12 channels together with the onboard 10-Bit A/D converter and data post processing
- 16-Bit timers - GPT12, Timer 2 and Timer 21
- Capture/compare unit for PWM signal generation (CCU6)
- 2 full duplex serial interfaces (UART1, UART2), UART1 with LIN support
- 2 synchronous serial channels (SSC1, SSC2)
- Usage as P/N-channel Power MOSFET driver (Half Bridge Application) supported by four additional differential channels in ADC1 (product variant dependant, only TLE9845QX)
- On-chip debug support via 2-wire SWD
- LIN Bootstrap loader to program the Flash via LIN (LIN BSL)
- 1 LIN 2.2 transceiver
- Single power supply from 3.0 V to 28 V

Type	Package	Marking
TLE984xQX	VQFN-48-31	TLE984xQX

- Low-dropout voltage regulators (LDO)
- 5 V voltage supply VDDEXT for external loads (e.g. Hall-sensor)
- Core logic supply at 1.5 V
- Programmable window watchdog (WDT1) with independent on-chip clock source
- Power saving modes:
  - Micro Controller Unit slow-down mode
  - Sleep Mode with cyclic sense option
  - Cyclic wake-up during Sleep Mode
  - Stop Mode with cyclic sense option
- Power-on and undervoltage/brownout reset generator
- Overtemperature protection
- Short circuit protection for all voltage regulators and actuators (High Side, Low Side)
- Loss of clock detection with fail safe mode for power switches
- Temperature Range T_J: -40 °C up to 150 °C
- Package VQFN-48-31 with LTI feature
- Green package (RoHS compliant)
- AEC Qualified

1.1 TLE984xQX product variants

Following the product family concept, some features or parameters differ between products.

1.1.1 Basic product variants

The basic devices types for the product family are summarized in **Table 1**.

Table 1 TLE984xQX Basic Product Variants

Product Name	Flash Size	RAM Size	Max. Operating Frequency	High-Side Switches	High Voltage Monitor Inputs	PN MOS Driver
TLE9842QX	36 KB	2 KB	25 MHz	1 HS	4 MON	No
TLE9843QX	48 KB	4 KB	25 MHz	1 HS	4 MON	No
TLE9844QX	64 KB	4 KB	25 MHz	1 HS	4 MON	No
TLE9845QX	48 KB	4 KB	40 MHz	2 HS	5 MON	Yes

1.1.2 Special Product Variants

Special device types are only available for high-volume applications on request.

Table 2 TLE984xQX Special Product Variants

Product Name	Flash Size	RAM Size	Max. Operating Frequency	High-Side Switches	High Voltage Monitor Inputs	PN MOS Driver
TLE9842-2QX	40 KB	2 KB	40 MHz	2 HS	5 MON	No
TLE9843-2QX	52 KB	4 KB	40 MHz	2 HS	5 MON	No
TLE9844-2QX	64 KB	4 KB	40 MHz	2 HS	5 MON	No

1.2 Abbreviations

The following acronyms and terms are used within this document. List see in **Table 3**.

Table 3 Acronyms

Acronyms	Name
AHB	ARM Advanced High-Performance Bus
CCU6	Capture Compare Unit 6
CGU	Clock Generation Unit
CLKMU	Clock Management Unit
CMU	Cyclic Management Unit
DPP	Data Post Processing
ECC	Error Correction Code
EEPROM	Electrically Erasable Programmable Read Only Memory
GPIO	General Purpose Input Output
HV	High Voltage
ICU	Interrupt Control Unit
LDO	Low DropOut voltage regulator
LIN	Local Interconnect Network
LSB	Least Significant Bit
LTI	Lead Tip Inspection
LV	Low Voltage
MCU	Microcontroller Unit
MF	Measurement Functions
MPU	Memory Protection Unit
MRST	Master Receive / Slave Transmit, corresponds to MISO in SPI
MSB	Most Significant Bit
MTSR	Master Transmit / Slave Receive, corresponds to MOSI in SPI
MU	Measurement Unit
NMI	Non Maskable Interrupt
NVIC	Nested Vector Interrupt Controller
OSC	Oscillator
OTP	One Time Programmable
PBA	Peripheral Bridge
PC	Program Counter
PCU	Power Control Unit
PD	Pull Down
PGU	Power supply Generation Unit
PLL	Phase Locked Loop
PMU	Power Management Unit
PPB	Private Peripheral Bus

Table 3 Acronyms

Acronyms	Name
PSW	Program Status Word
PU	Pull Up
PWM	Pulse Width Modulation
RAM	Random Access Memory
RCU	Reset Control Unit
rfu	reserved for future use
RMU	Reset Management Unit
ROM	Read Only Memory
SCU	System Control Unit
SOW	Short Open Window (for WDT1)
SPI	Serial Peripheral Interface
SSC	Synchronous Serial Channel
SWD	ARM Serial Wire Debug
TCCR	Temperature Compensation Control Register
TMS	Test Mode Select
TSD	Thermal Shut Down
UART	Universal Asynchronous Receiver Transmitter
VBG	Voltage reference Band Gap
VCO	Voltage Controlled Oscillator
WDT1	Watchdog timer in SCU-PM (System Control Unit - Power Modules)
WMU	Wake-up Management Unit
100TP	100 Times Programmable

2 Block Diagram

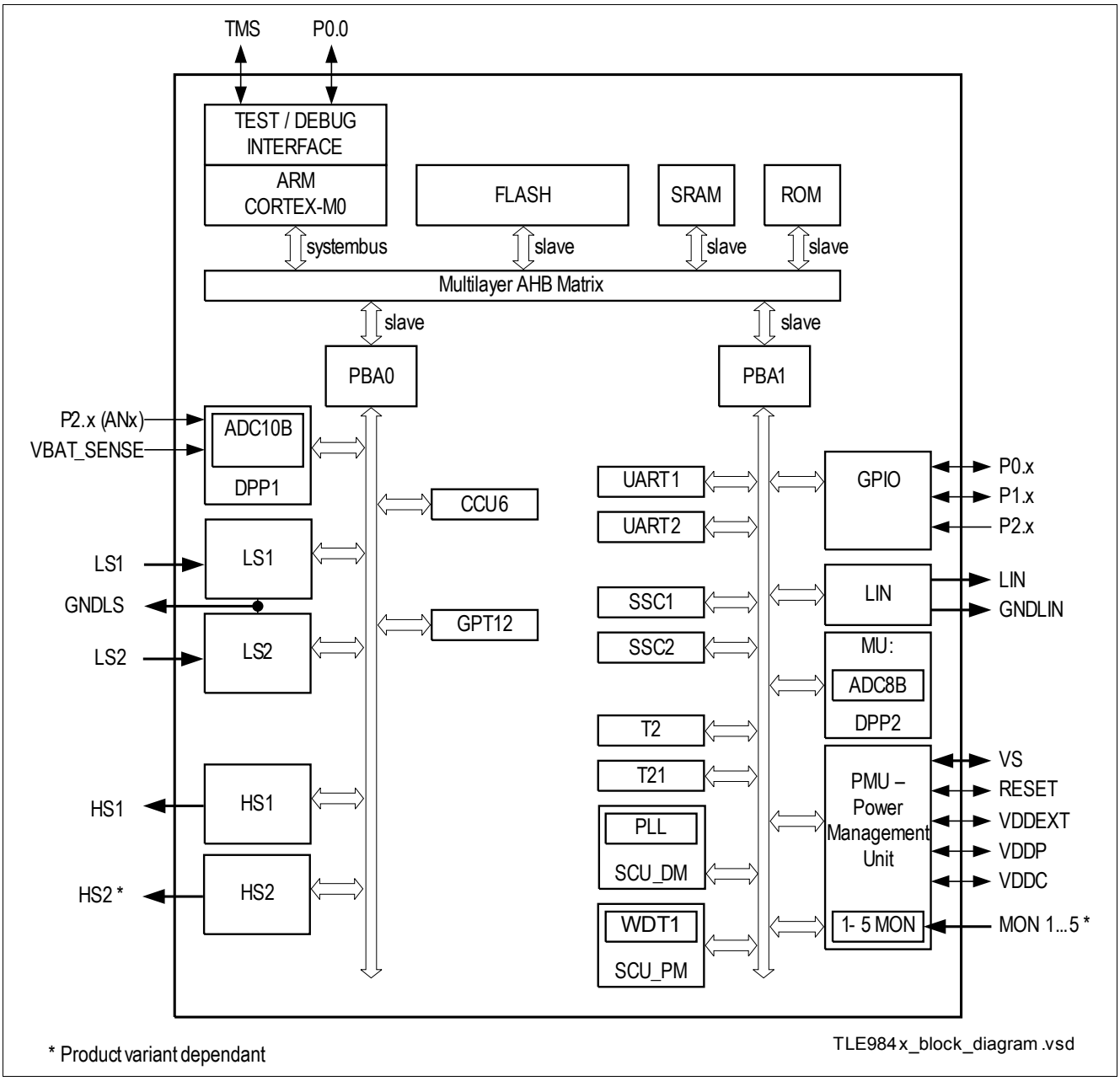

Figure 1 Block Diagram, TLE984xQX

3 Device Pinout and Pin Configuration

3.1 Device Pinout

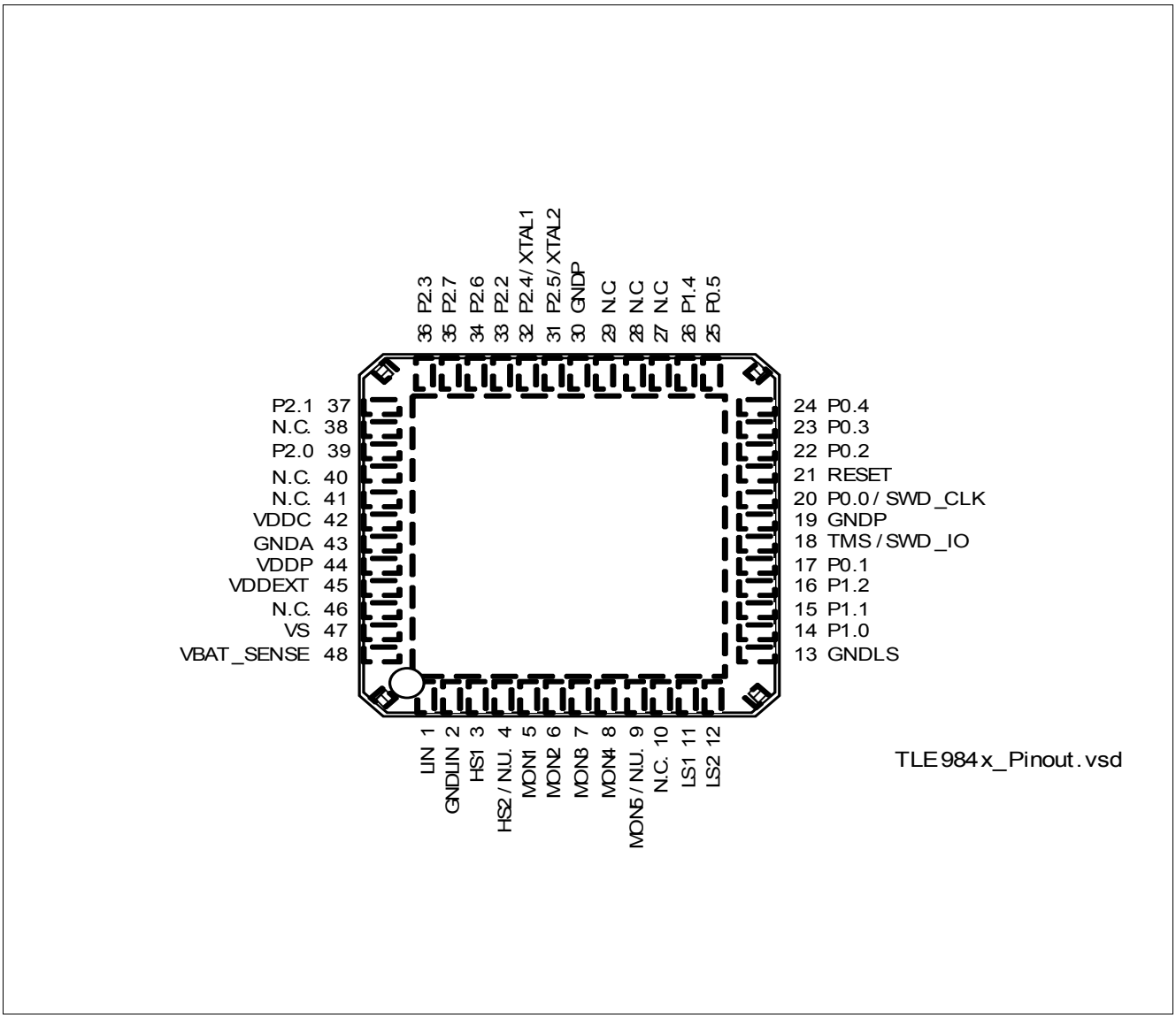

Figure 2 Device Pinout, TLE984xQX

3.2 Pin Configuration

After reset, all pins are configured as input (except supply and LIN pins) with one of the following settings:

- Pull-up enabled only (PU)
- Pull-down enabled only (PD)
- Input with both pull-up and pull-down disabled (I)
- Output with output stage deactivated = high impedance state (Hi-Z)

The functions and default states of the TLE984xQX external pins are provided in the following table.

Type: indicates the pin type.

- I/O: Input or output
- I: Input only
- O: Output only
- P: Power supply

Not all alternate functions listed, see **Chapter 15**.

Table 4 Pin Definitions and Functions

Symbol	Pin Number	Type	Reset State	Function
P0				**Port 0** Port 0 is an 6-Bit bidirectional general purpose I/O port. Alternate functions can be assigned and are listed in the Port description. Main function is listed below.
P0.0	20	I/O	I/PU	SWD_CLK Serial Wire Debug Clock GPIO General Purpose IO Alternate function mapping see **Table 210**
P0.1	17	I/O	I/PU	GPIO General Purpose IO Alternate function mapping see **Table 210**
P0.2	22	I/O	I/PD	GPIO General Purpose IO Alternate function mapping see **Table 210**
P0.3	23	I/O	I/PU	GPIO General Purpose IO Alternate function mapping see **Table 210**
P0.4	24	I/O	I/PU	GPIO General Purpose IO Alternate function mapping see **Table 210**
P0.5	25	I/O	I/PU	GPIO General Purpose IO Alternate function mapping see **Table 210**
P1				**Port 1** Port 1 is an 4-Bit bidirectional general purpose I/O port. Alternate functions can be assigned and are listed in the Port description. Main function is listed below.
P1.0	14	I/O	I	GPIO General Purpose IO Alternate function mapping see **Table 224**
P1.1	15	I/O	I	GPIO General Purpose IO Alternate function mapping see **Table 224**
P1.2	16	I/O	I	GPIO General Purpose IO Alternate function mapping see **Table 224**
P1.4	26	I/O	I	GPIO General Purpose IO Alternate function mapping see **Table 224**

Table 4 Pin Definitions and Functions (cont'd)

Symbol	Pin Number	Type	Reset State	Function
P2				**Port 2** Port 2 is an 8-Bit general purpose input-only port. Alternate functions can be assigned and are listed in the Port description. Main function is listed below.
P2.0	39	I	I	AN0 ADC1 analog input channel 12 Alternate function mapping see **Table 237**
P2.1	37	I	I	AN1 ADC1 analog input channel 7 Alternate function mapping see **Table 237**
P2.2	33	I	I	AN2 ADC1 analog input channel 8 Alternate function mapping see **Table 237**
P2.3	36	I	I	AN3 ADC1 analog input channel 9 Alternate function mapping see **Table 237**
P2.4	32	I	I	Alternate function mapping see **Table 237** XTAL1[1)] External oscillator input
P2.5	31	I O	I Hi-Z	Alternate function mapping see **Table 237** XTAL2[1)] External oscillator output
P2.6	34	I	I	AN6 ADC1 analog input channel 10 Alternate function mapping see **Table 237**
P2.7	35	I	I	AN7 ADC1 analog input channel 11 Alternate function mapping see **Table 237**
Power Supply				
VS	47	P	–	Battery supply input
VDDP	44	P	–	I/O port supply (5.0 V). Do not connect external loads. For buffer and bypass capacitors.
VDDC	42	P	–	Core supply (1.5 V during Active Mode, 0.9 V during Stop Mode). Do not connect external loads. For buffer/bypass capacitor.
VDDEXT	45	P	–	External voltage supply output (5.0 V, 20 mA)
GNDLS	13	P	–	Low-side ground LS1, LS2
GNDP	19, 30	P	–	Core supply ground
GNDA	43	P	–	Analog supply ground
GNDLIN	2	P	–	LIN ground
Monitor Inputs				
MON1	5	I	I	High Voltage Monitor Input 1
MON2	6	I	I	High Voltage Monitor Input 2
MON3	7	I	I	High Voltage Monitor Input 3
MON4	8	I	I	High Voltage Monitor Input 4
MON5 / N.U.	9	I	I	High Voltage Monitor Input 5 (product variant dependant)
High-Side Switch / Low-Side Switch Outputs				
LS1	11	O	Hi-Z	Low-Side switch output 1

Table 4 Pin Definitions and Functions (cont'd)

Symbol	Pin Number	Type	Reset State	Function
LS2	12	O	Hi-Z	Low-Side Switch output 2
HS1	3	O	Hi-Z	High-Side Switch output 1
HS2 / N.U.	4	O	Hi-Z	High-Side Switch output 2 (product variant dependant)
LIN Interface				
LIN	1	I/O	PU	LIN bus interface input/output
Others				
TMS	18	I	I/PD	TMS test mode select input SWD_IO Serial Wire Debug input/output
RESET	21	I/O	I/O/PU	Reset input/output, not available during Sleep Mode
VBAT_SENSE	48	I	I	Battery supply voltage sense input
N.C.	10, 27, 28, 29, 38, 40, 41, 46	–	–	Not connected, can be connected to GND
EP	–	–	–	Exposed Pad, connect to GND

1) configurable by user

4 Modes of Operation

This highly integrated circuit contains analog and digital functional blocks. For system and interface control an embedded 32-Bit Cortex-M0 microcontroller is included. For internal and external power supply purposes, on-chip low drop-out regulators are existent. An internal oscillator (no external components necessary) provides a cost effective and suitable clock in particular for LIN slave nodes. As communication interface, a LIN transceiver and several High Voltage Monitor Inputs with adjustable threshold and filters are available. Furthermore one or twoHigh-Sides Switches (e.g. for driving LEDs or powering of switches), two low-side switches (e.g. for relays) and several general purpose input/outputs (GPIO) with pulse-width modulation (PWM) capabilities are available.

The Micro Controller Unit supervision and system protection including reset feature is controlled by a programmable window watchdog. A cyclic wake-up circuit, supply voltage supervision and integrated temperature sensors are available on-chip.

All relevant modules offer power saving modes in order to support terminal 30 connected automotive applications. A wake-up from the power saving mode is possible via a LIN bus message, via the monitoring inputs or repetitive with a programmable time period (cyclic wake-up).

The integrated circuit is available in a package with 0.5 mm pitch and is designed to withstand the challenging conditions of automotive applications.

The TLE984xQX has several operational modes mainly to support low power consumption requirements. The low power modes and state transitions are depicted in **Figure 3** below.

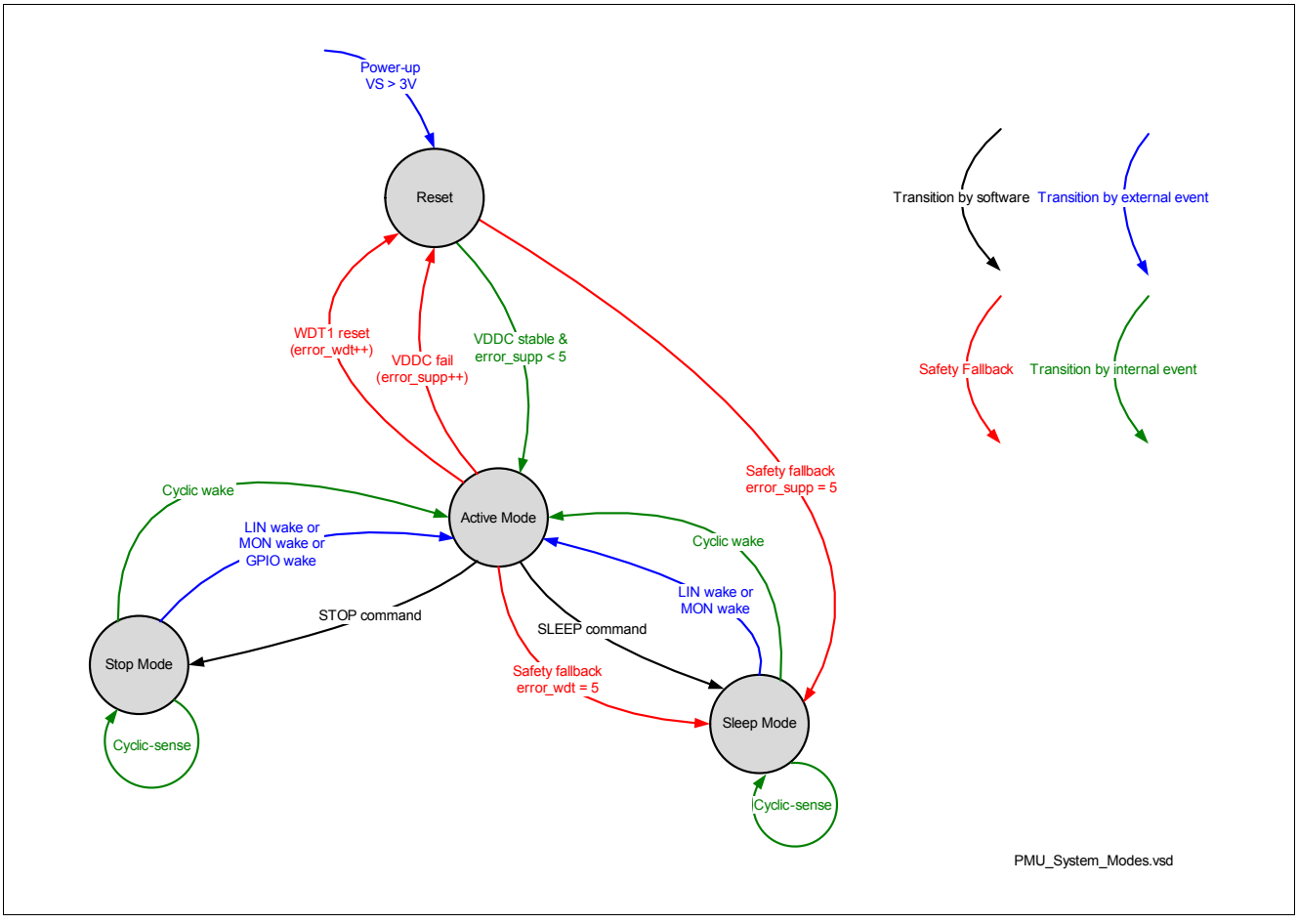

Figure 3 Power Control State Diagram

Reset Mode

The Reset Mode is a transition mode e.g. during power-up of the device after a power-on reset. In this mode the on-chip power supplies are enabled and all other modules are initialized. Once the core supply VDDC is stable, the Active Mode is entered. In case the watchdog timer WDT1 fails for more than four times, a fail-safe transition to the Sleep Mode is done.

Active Mode

In Active Mode all modules are activated and the TLE984xQX is fully operational.

Stop Mode

The Stop Mode is one out of two major low power modes. The transition to the low power modes is done by setting the respective Bits in the mode control register. In Stop Mode the embedded microcontroller is still powered allowing faster wake-up reaction times, but not clocked. A wake-up from this mode is possible by LIN bus activity, the High Voltage Monitor Input pins or the respective 5V GPIOs.

Sleep Mode

The Sleep Mode is a major low-power mode. The transition to the low-power modes is done by setting the respective Bits in the Micro Controller Unit mode control register. The sleep time is configurable. In Sleep Mode the embedded microcontroller power supply is deactivated, allowing the lowest system power consumption, but the wake-up time is longer compared to the Stop Mode. In this mode a 64 bit wide buffer for data storage is available. A wake-up from this mode is possible by LIN bus activity or the High Voltage Monitor Input pins and cyclic wake. A wake-up from Sleep Mode behaves similar to a power-on reset. While changing into Sleep Mode, no incoming wake-requests are lost (i.e. no dead-time). It is possible to enter sleep-mode even with LIN dominant.

Cyclic Wake-up Mode

The cyclic wake-up mode is a special operating mode of the Sleep Mode and the Stop Mode. The transition to the cyclic wake-up mode is done by first setting the respective Bits in the mode control register followed by the SLEEP or STOP command. Additional to the cyclic wake-up behavior (wake-up after a programmable time period), the wake-up sources of the normal Stop Mode and Sleep Mode are available.

Cyclic Sense Mode

The cyclic sense mode is a special operating mode of the Sleep Mode and the Stop Mode. The transition to the cyclic sense mode is done by first setting the respective Bits in the mode control register followed by the STOP or SLEEP command. In cyclic sense mode the High-Side Switch can be switched on periodically for biasing some switches for example. The wake-up condition is configurable, when the sense result of defined monitor inputs at a window of interest changed compared to the previous wake-up period or reached a defined state respectively. In this case the Active Mode is entered immediately.

The following table shows the possible power mode configurations of each major module or function respectively.

Table 5 Power Mode Configurations

Module/function	Active Mode	Sleep Mode	Stop Mode	Comment
VPRE, VDDP, VDDC	ON	OFF	ON	–
VDDEXT	ON/OFF	OFF	cyclic ON/OFF	–
HSx	ON/OFF	cyclic ON/OFF	cyclic ON/OFF	cyclic sense
LSx	ON/OFF	OFF	OFF	–
LIN TRx	ON/OFF	wake-up only / OFF	wake-up only/ OFF	–

Table 5 Power Mode Configurations (cont'd)

Module/function	Active Mode	Sleep Mode	Stop Mode	Comment
MONx (wake-up)	n.a.	disabled/static/ cyclic	disabled/static/ cyclic	cyclic: combined with HS=on
MONx (measurement)	ON/OFF	OFF	OFF	available on all channels
VS sense	ON/OFF brownout detection	brownout detection	brownout detection	brownout det. done in PCU
VBAT_SENSE	ON/OFF	OFF	OFF	–
GPIO 5V	ON	OFF	ON	–
WDT1	ON	OFF	OFF	–
CYCLIC WAKE	n.a.	cyclic wake-up/ cyclic sense/OFF	cyclic wake-up/ cyclic sense/OFF	cyclic sense with HS; wake-up needs MC for enter Sleep Mode again
Measurement	ON[1)]	OFF	OFF	–
Micro Controller Unit	ON/slow-down/STOP	OFF	OFF	–
CLOCK GEN (MC)	ON	OFF	OFF	–
LP_CLK (f_{LP_CLK})	ON	OFF	OFF	WDT1
LP_CLK2 (f_{LP_CLK2})	ON	ON	ON	for cyclic wake-up

1) May not be switched off due to safety reasons

Wake-up Source Prioritization

All wake-up sources have the same priority. In order to handle the asynchronous nature of the wake-up sources, the first wake-up signal will initiate the wake-up sequence. Nevertheless all wake-up sources are latched in order to provide all wake-up events to the application software. The software can clear the wake-up source flags. It is ensured, that no wake-up event is lost.

As default wake-up sources, MON inputs and cyclic wake are activated after power-on reset, LIN is disabled as wake-up source by default.

Wake-up Levels and Transitions

The wake-up can be triggered by rising, falling or both signal edges for each monitor input individually.

5 Device Register Types

The following register types are used within this device. List see in Table 6.

Table 6 Register Types

Type	can be modified by			Description
	Hardware	Firmware	Software	
r	yes	no	no	read-only flag
rh	yes	no	no	read-only flag which is modified by hardware
rhc	yes	no	yes	read-only flag which status can be clear by a read operation
rw	no	no	yes	bit can be read or written
rwp	yes	yes	no	protected bit; read operation is always possible
rwp2	yes	yes	yes	protected bit; protection can be removed by writing scu password.
rwh	yes	no	yes	bit can be written by hardware and software; hardware has priority
rwh1	yes	no	yes	bit can be written by hardware and software; hardware has priority.
rwc	yes	no	yes	bit can be written by hardware and software; writing to register with any value clears the status.
rwd	no	no	yes	bit can be written by software.
rwhir	yes	no	yes	bit can be written by hardware and software; hardware has only priority to clear the bit.
w	yes	yes	yes	bit can be written by hardware or software; this bit can only be set by software; it is cleared by hardware.
wh	yes	no	yes	bit can be written by hardware and software; hardware has priority
wi	no	yes	yes	bit can be written by hardware or software; this bit can only be set by software; it is cleared by hardware.

6 Power Management Unit (PMU)

6.1 Features

- System modes control (startup, sleep, stop and active)
- Power management (cyclic wake)
- Control of system voltage regulators with diagnosis (overload, short, overvoltage)
- Fail safe mode detection and operation in case of system errors (watchdog fail)
- Wake-up sources configuration and management (LIN, MON, GPIOs)
- System error logging

6.2 Introduction

The purpose of the power management unit is to ensure the fail safe behavior of the system IC. Therefore the power management unit controls all system modes including the corresponding transitions. The power management unit is responsible for generating all needed voltage supplies for the embedded MCU (VDDC, VDDP) and the external supply (VDDEXT). Additionally, the PMU provides well defined sequences for the system mode transitions and generates hierarchical reset priorities. The reset priorities control the reset behavior of all system functionalities especially the reset behavior of the embedded MCU. All these functions are controlled by finite state machines. The system master functionality of the PMU requires the generation of an independent logic supply and system clock. Therefore the PMU has a module internal logic supply and system clock which works independently of the MCU clock.

6.2.1 Block Diagram

The following figure shows the structure of the Power Management Unit. **Table 7** describes the submodules more detailed.

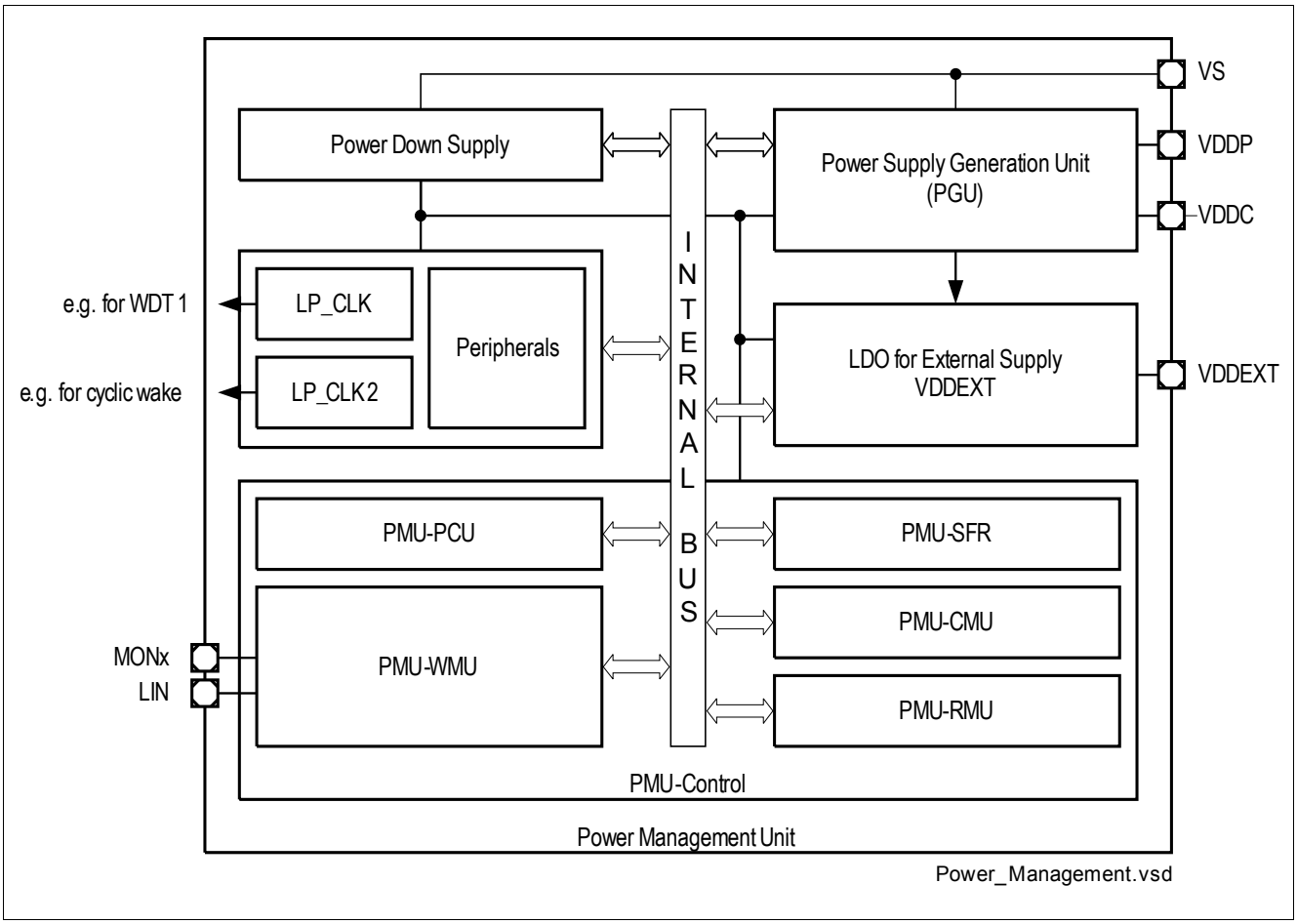

Figure 4 Power Management Unit Block Diagram

Table 7 Description of PMU Submodules

Mod. Name	Modules	Functions
Power Down Supply	Independent Supply Voltage Generation for PMU	This supply is dedicated to the PMU to ensure an independent operation from generated power supplies (VDDP, VDDC).
LP_CLK (=f_{LP_CLK})	- Clock Source for all PMU submodules - Backup Clock Source for System - Clock Source for WDT1	This ultra low power oscillator generates the clock for the PMU. This clock is also used as backup clock for the system in case of PLL Clock failure and as independent clock source for WDT1.
LP_CLK2 (=f_{LP_CLK2})	Clock Source for PMU	This ultra low power oscillator generates the clock for the PMU in Stop Mode and in the cyclic modes.
Peripherals	Peripheral Blocks of PMU	These blocks include the analog peripherals to ensure a stable and fail safe PMU startup and operation (bandgap, bias).

Table 7 Description of PMU Submodules (cont'd)

Mod. Name	Modules	Functions
Power Supply Generation Unit (PGU)	Voltage regulators for VDDP and VDDC	This block includes the voltage regulators for the pad supply (VDDP) and the core supply (VDDC).
VDDEXT	Voltage regulator for VDDEXT to supply external modules (e.g. Sensors)	This voltage regulator is a dedicated supply for external modules.
PMU-SFR	All PMU relevant Extended Special Function Registers	This module contains all PMU relevant registers, which are needed to control and monitor the PMU.
PMU-PCU	Power Control Unit of the PMU	This block is responsible for controlling all power related actions within the PGU Module.It also contains all regulator related diagnosis like under- and overvoltage detection, overcurrent and short circuit diagnoses.
PMU-WMU	Wake-up Management Unit of the PMU	This block is responsible for controlling all Wake-up related actions within the PMU Module.
PMU-CMU	Cyclic Management Unit of the PMU	This block is responsible for controlling all actions within cyclic mode.
PMU-RMU	Reset Management Unit of the PMU	This block generates resets triggered by the PMU like undervoltage or short circuit reset, and passes all resets to the relevant modules and their register. A reset status register with every reset source is available.

6.2.2 PMU Modes Overview

The following state diagram shows the available modes of the device.

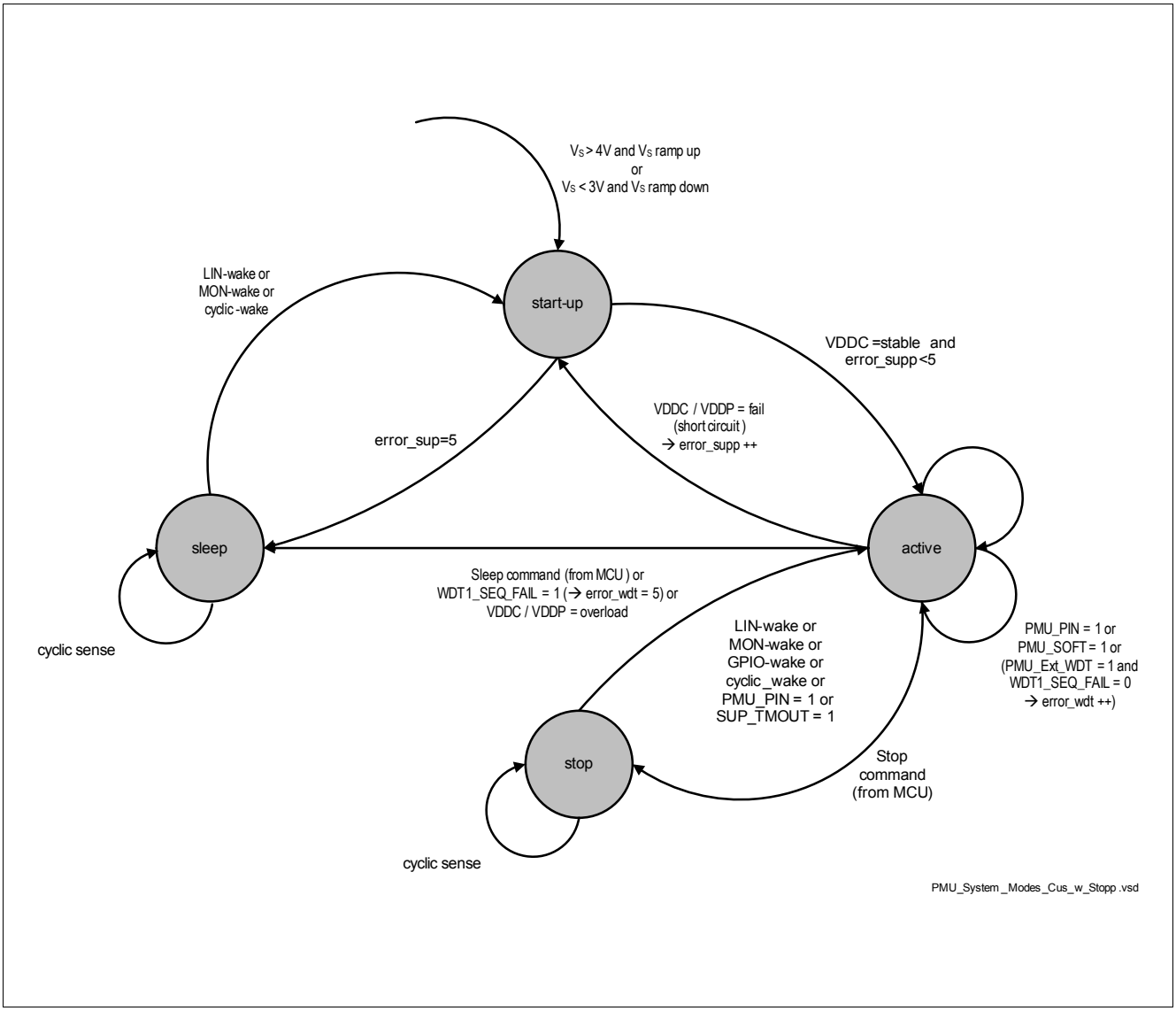

Figure 5 Power Management Unit System Modes

Active Mode

In Active Mode the Power Management Unit releases the reset of the embedded MCU and the application software takes control of the system. Now the PMU is responsible for supplying and supervising the embedded system. The supervision functionality of the PMU monitors the output voltage/current of the generated supplies and the status information of the system watchdog (WDT1).

Under normal operating conditions (exceptions see Chapter **Power Control Unit - Fail Safe Scenarios**) the power save modes are set by the user software only. The PMU gets the respective command and after a certain delay the corresponding ready signal will follow. The user software has to write the command to the power mode control register (PMCON0) of the SCU. As a consequence the SCU sends the MCU in data retention mode and accepts this with the respective ready signal.

Sleep Mode

The Sleep Mode is the power saving mode where the lowest power consumption is achieved. In this mode the PMU resets all system functionalities and switches off all voltage supplies (VDDP, VDDC, VDDEXT) which are generated in the PMU. The only submodules of the PMU which stay active are the ones responsible for controlling the wake-up procedure of the system. **Figure 6** shows the Sleep Mode entry procedure.

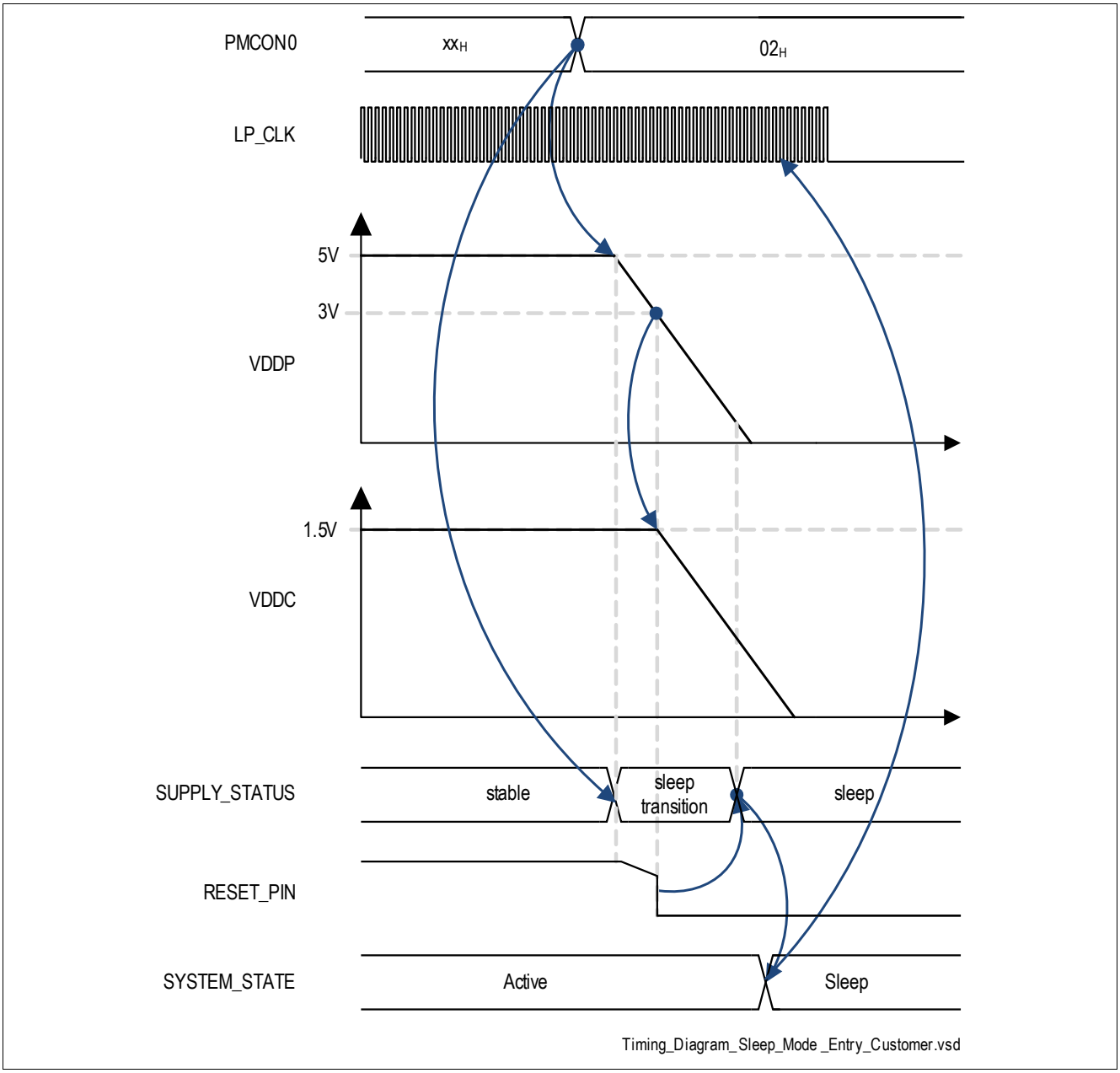

Figure 6 Sleep Mode Entry Timing

The Sleep Mode is terminated by a LIN dominant pulse or a corresponding (rising edge / falling edge) activity at the MON input. These events are triggered outside of the PMU. The PMU itself processes the wake-up information in an independent FSM which starts the PMU internal system clock to process the following startup sequences in a synchronous way. A successful startup sequence enters the startup Mode automatically. The wake-up procedure described is the default setup of the PMU.

The Sleep Mode can be terminated by synchronous wake-up events too. If this is desired, the PMU must be configured by setting the corresponding SFRs. A synchronous wake-up can be configured using the Cyclic Sense.

If these synchronous wake-up events are configured then the power consumption of the PMU increases in Sleep Mode. The increased current consumption is caused by an oscillator which generates the needed time base (typ. 100 kHz). **Figure 7** illustrates the wake via LIN

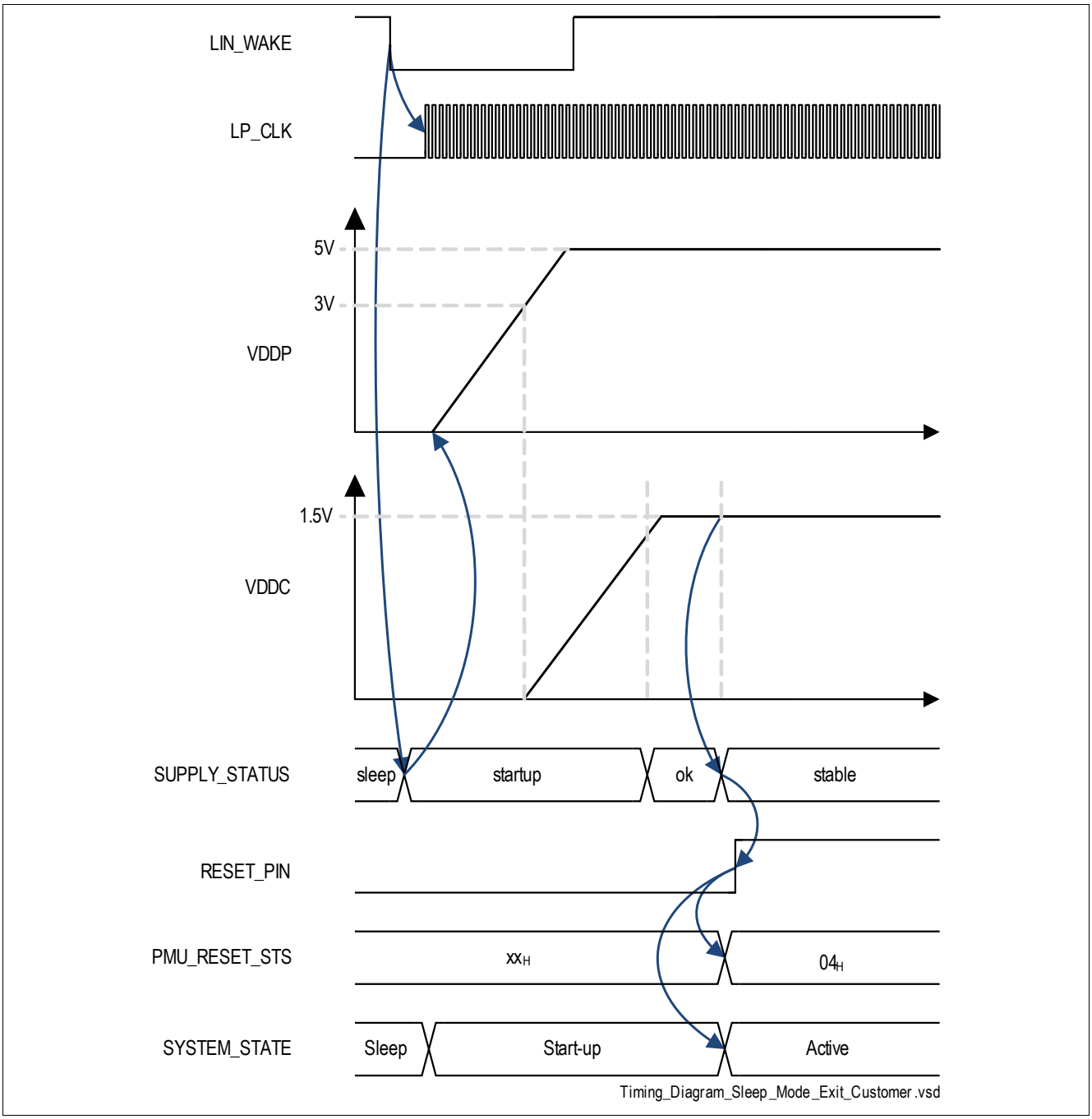

Figure 7 Sleep Mode LIN Wake-up Timing

The wake-up procedure from Sleep Mode via MONx pins (instead of LIN) follows the same sequence as shown in the figure above.

Stop Mode

The objective of the Stop Mode is to provide a data retention feature for the embedded MCU and the special function registers (XSFRs). In the Stop Mode the core supply voltage VDDC goes from 1.5 V to 0.9 V with the

objective to reduce leakage current as much as possible. During the Stop Mode the dynamic behavior (load jumps) of the PMU internally generated voltage supplies are very limited. The corresponding limitation is given by the external buffer capacitor at the VDDC/VDDP pin. In case of a 330 nF buffer capacitor at VDDC the allowable load jump is 300µA/ms. The figure below shows the Stop Mode entry sequence.

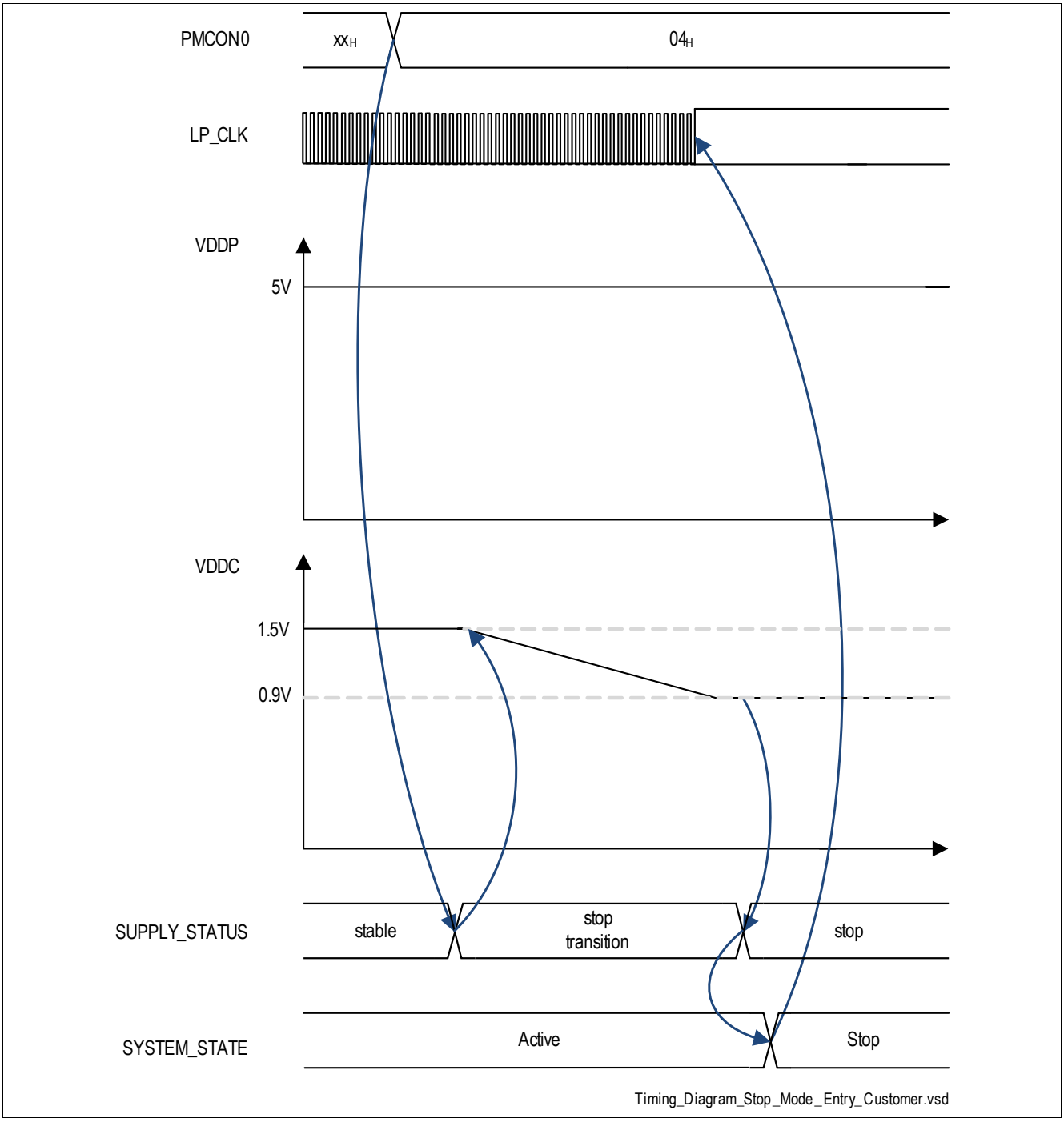

Figure 8 Stop Mode Entry Timing

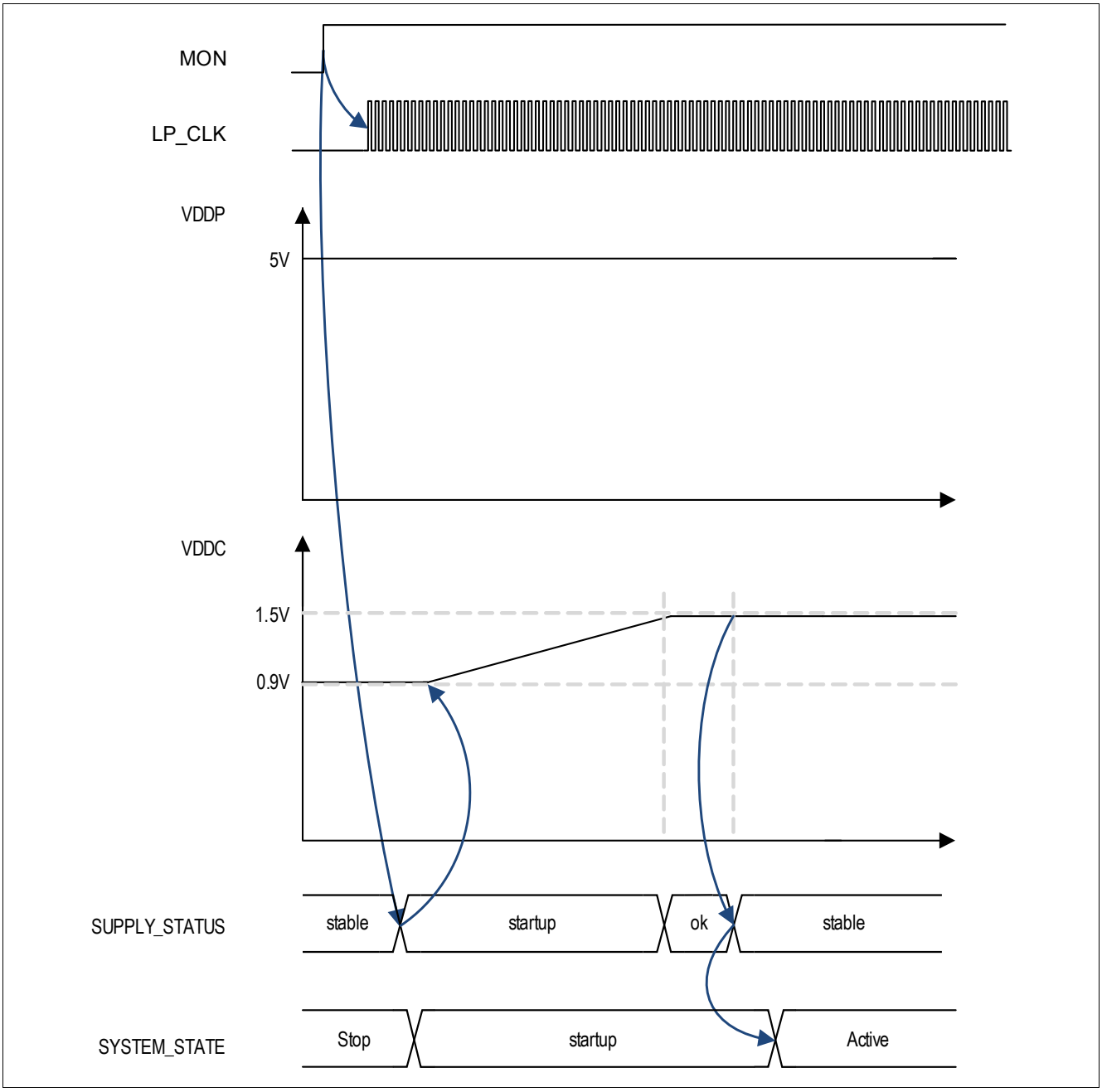

Figure 9 Stop Mode Wakeup Timing

The wake-up features to terminate the Stop Mode are equivalent to those which are used for Sleep-exit. The asynchronous wake-up works using a LIN message or an event (rising edge/falling edge) at one of the MON inputs. In addition to the asynchronous wake-up over high-voltage inputs (MONs) the Stop Mode terminates by an event at one of the GPIO pins. The wake-up configuration of every MON and GPIO input is stored in the corresponding XSFR. The configuration for the high-voltage inputs (MONs) are used for Stop-exit and Sleep-exit (same XSFR). Generally the synchronous wake-up features are equivalent to the Sleep Mode exit. The Stop Mode terminates by using one of the synchronous wake-up features. The synchronous wake-up features are separated in Cyclic Sense and wake-up after time-out (Cyclic Wake). Both of these wake-up procedures work similarly to the Sleep-exit. In Cyclic Sense mode, both the MONx inputs as well as the GPIOs can be evaluated and a transition will cause a termination of the Stop Mode. The sensing period for MONx inputs and GPIOs is generated with the same time base (typ. 100 kHz). The sensing period is set in the **PMU_SLEEP**. To bias the external load of the

GPIOs, the supply voltage VDDEXT may switch on for the sensing time. Only during this sensing time the PMU evaluates the corresponding GPIO. In case of a valid wake-up signal the PMU goes to Active Mode and the application software takes control over the system. If no valid wake-up information is available, then the external supply VDDEXT switches off until the configured sensing period starts again.

6.3 Power Supply Generation (PGU)

As shown in the diagram below the Power Supply Generation consists of the following modules:

Submodules of PSG are:

- **Power Down Supply:** independent analog supply voltage generation for Power Control Unit logic, for VDDP Regulator and for VDDC Regulator.
- **VPRE:** analog supply voltage pre-regulator. Purpose of this regulator is the power dissipation reduction for the following regulator stages.
- **VDDP:** 5V digital voltage regulator used for internal modules and all GPIOs.
- **VDDC:** 1.5V digital voltage regulator used for internal microcontroller modules and core logic.
- **PCU:** Power Control Unit responsible for supervising and controlling 5V regulator and 1.5V regulator.

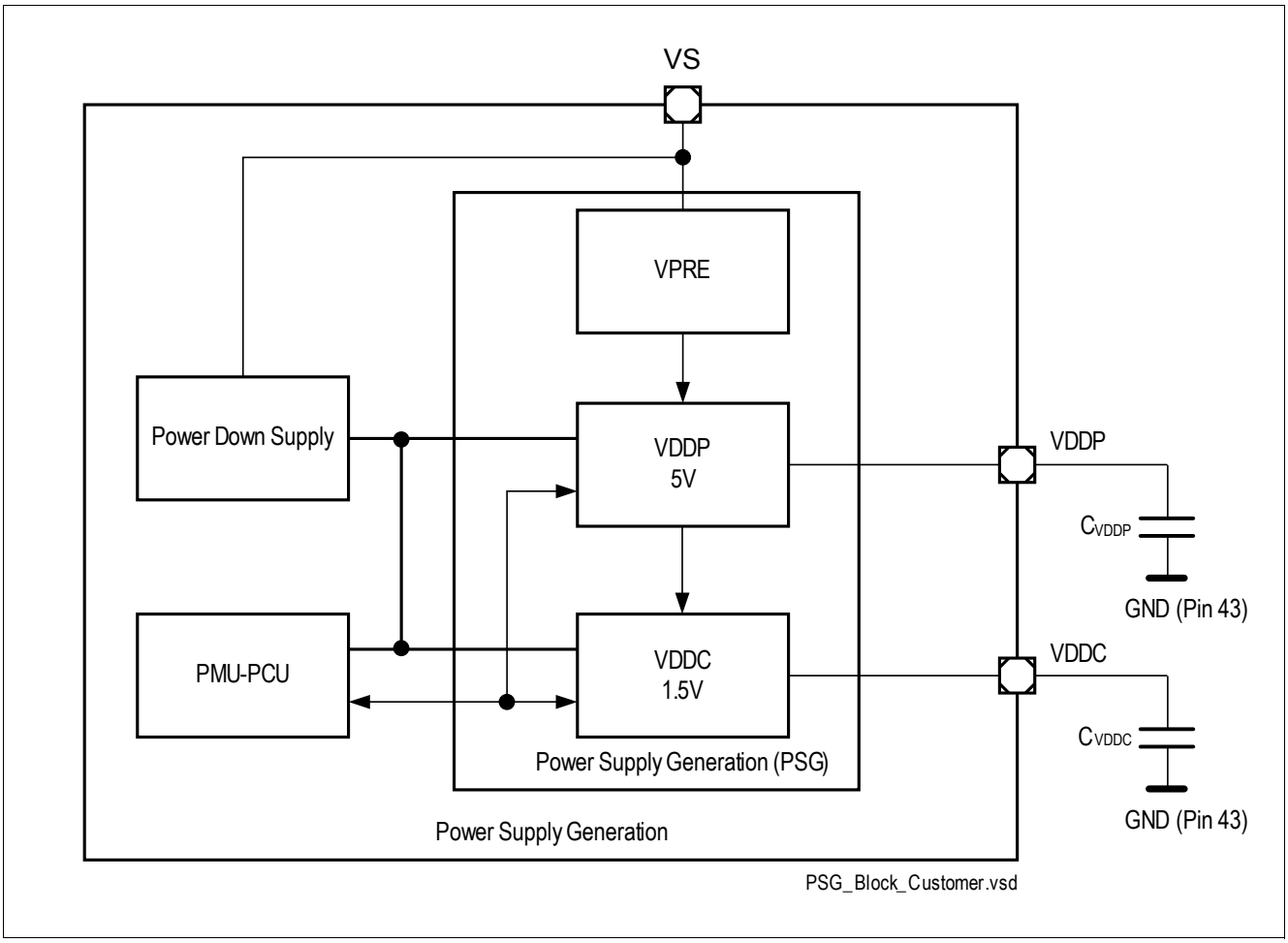

Figure 10 Power Supply Generation Block Diagram

6.3.1 Voltage Regulator 5.0V (VDDP)

This module represents the 5 V voltage regulator, which provides the pad supply for the parallel port pins and other 5 V analog functions (e.g. LIN Transceiver).

Features

- 5 V low-drop voltage regulator

- Overcurrent monitoring and shutdown with MCU signalling (Interrupt)
- Overvoltage monitoring with MCU signalling (Interrupt)
- Undervoltage monitoring with MCU signalling (Interrupt)
- Undervoltage monitoring with Reset (Undervoltage Reset, V_{DDPUV})
- Overtemperature shutdown with MCU signalling (Interrupt)
- Pre-Regulator for VDDC Regulator
- GPIO Supply
- Pull Down Current Source at the output for Sleep Mode only (typ.5 mA)

The output capacitor C_{VDDP} is mandatory to ensure a proper regulator functionality.

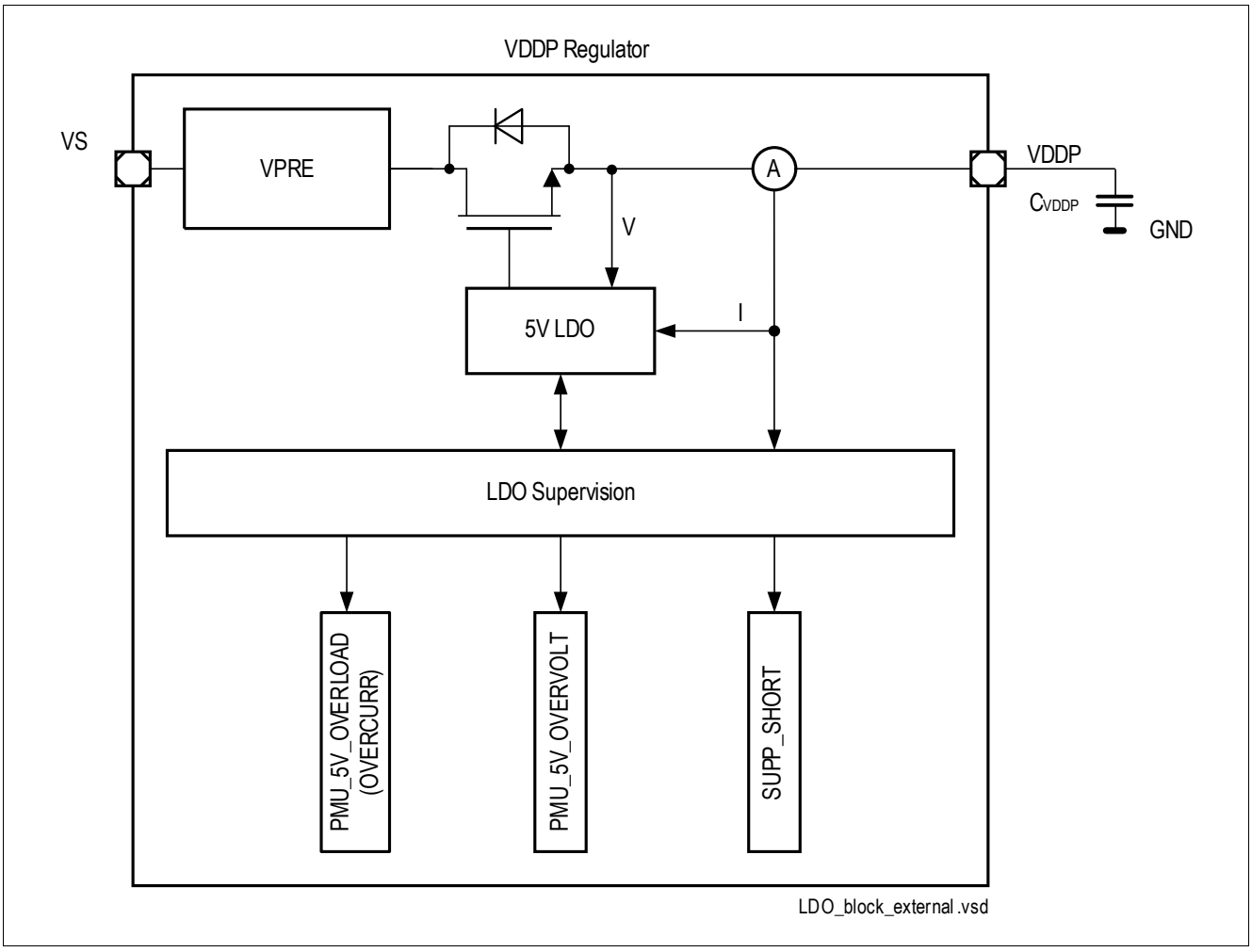

Figure 11 Module Block Diagram of VDDP Voltage Regulator

6.3.2 Voltage Regulator 1.5V (VDDC)

This module represents the 1.5 V voltage regulator, which provides the supply for the microcontroller core, digital peripherals and other chip internal analog 1.5 V functions (e.g. ADC).

Features

- 1.5 V low-drop voltage regulator
- Overcurrent monitoring and Shutdown with MCU signalling (Interrupt)
- Overvoltage monitoring with MCU signalling (Interrupt)
- Undervoltage monitoring with MCU signalling (interrupt)
- Undervoltage monitoring with reset
- Overtemperature Shutdown with MCU signalling (Interrupt)
- Pull Down Current Source at the output for Sleep Mode only (typ. 100 µA)

The output capacitor C_{VDDC} is mandatory to ensure a proper regulator functionality.

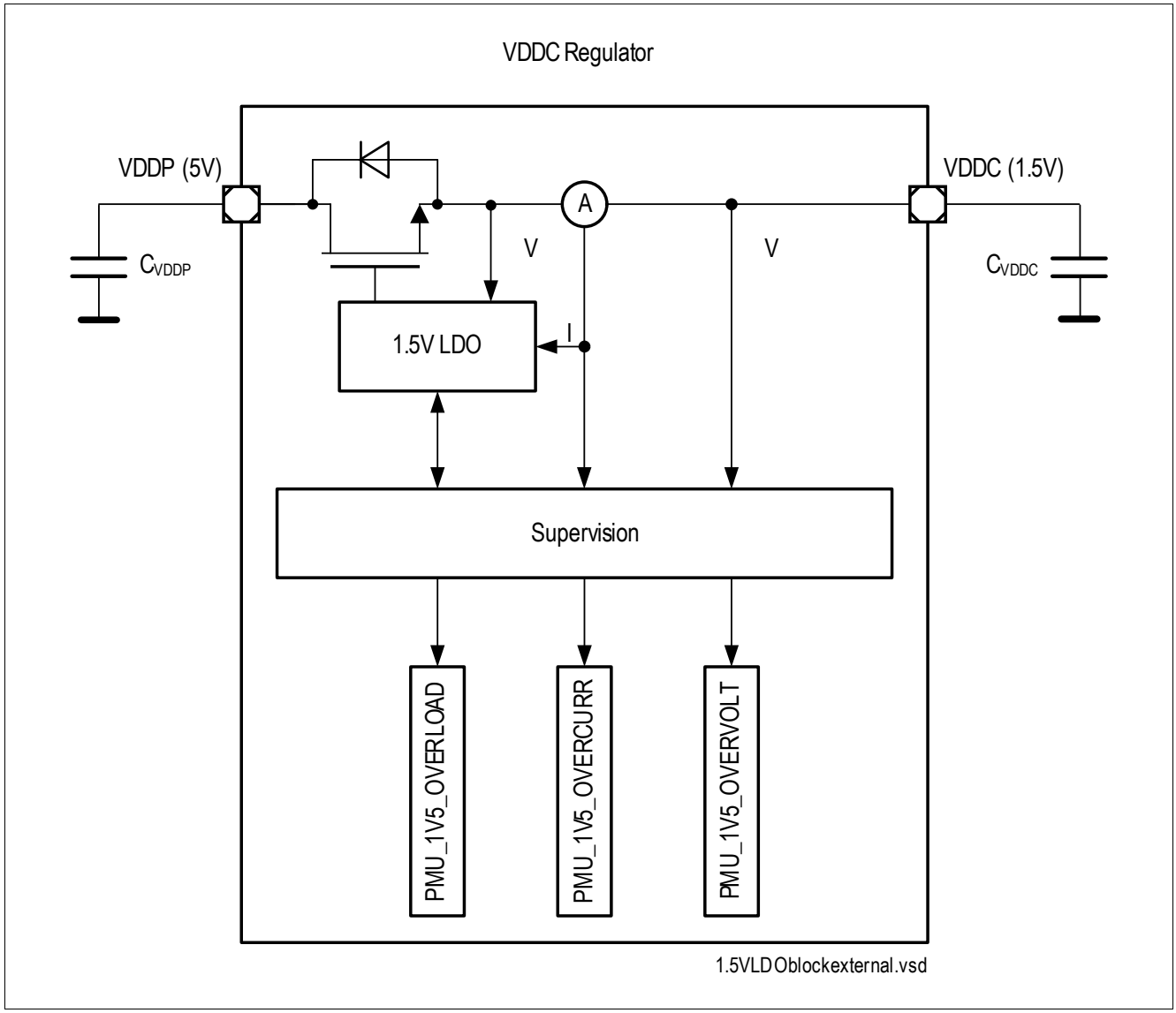

Figure 12 Module Block Diagram of VDDC Voltage Regulator

6.3.3 External Voltage Regulator 5.0V (VDDEXT)

This module represents the 5 V voltage regulator, which serves as a supply for external circuits. It can be used e.g. to supply an external sensor, LEDs or potentiometers.

Features

- Switchable (by software) +5 V, low-drop voltage regulator
- Switch-on undervoltage blanking time in order to drive small capacitive loads
- Intrinsic current limitation
- Undervoltage monitoring and shutdown with MCU signalling (Interrupt)
- Overtemperature Shutdown with MCU signalling (Interrupt)
- Pull Down Current Source at the output for Sleep Mode only (typ. 100 µA)
- Cyclic sense option together with GPIOs
- Low current mode available to ensure reduced stop mode current consumption. In this mode current capability is reduced to I_{VDDEXT_LCM}

The output capacitor C_{VDDEXT} is mandatory to ensure a proper regulator functionality.

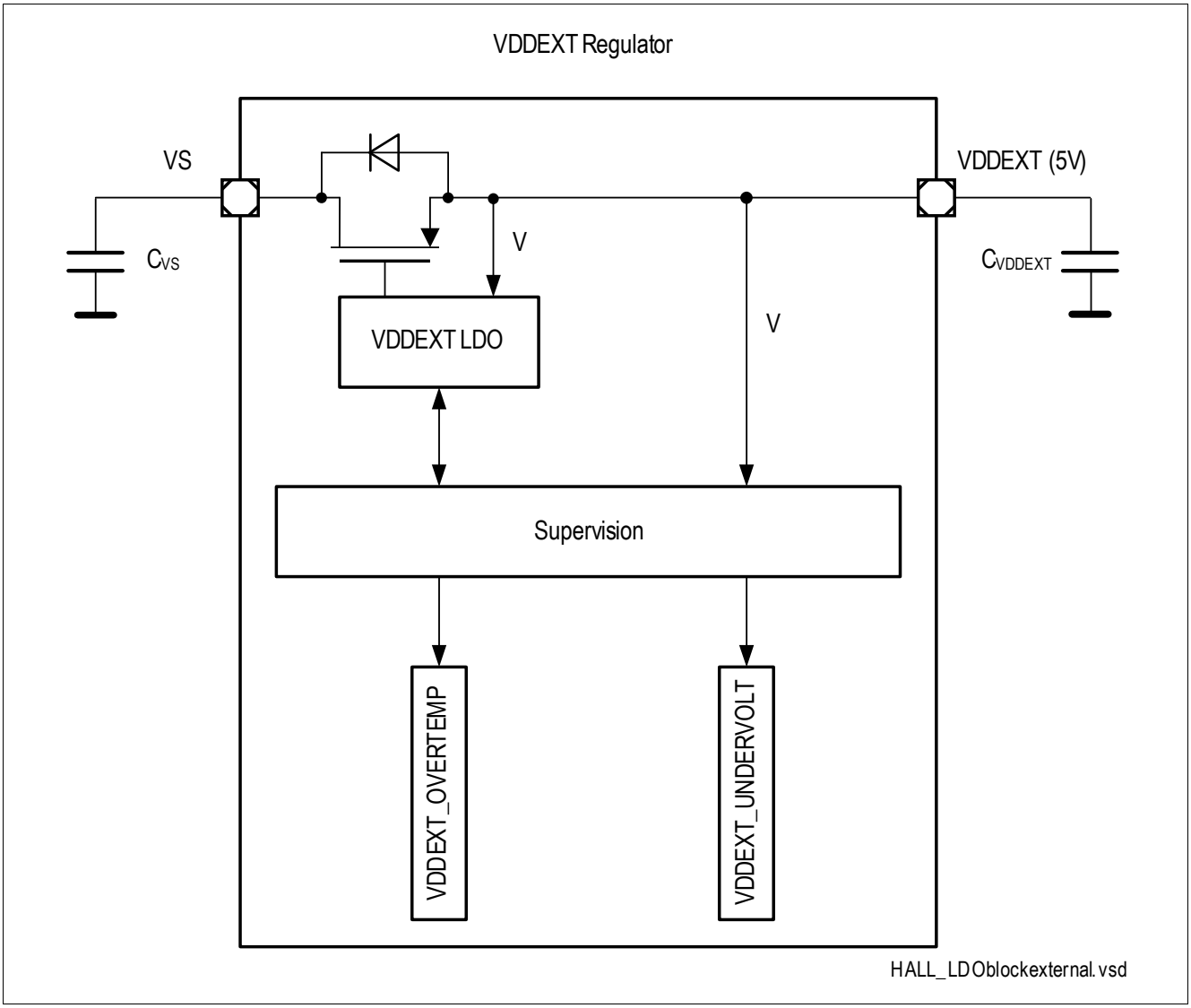

Figure 13 Module Block Diagram

6.3.4 Power-on Reset Concept

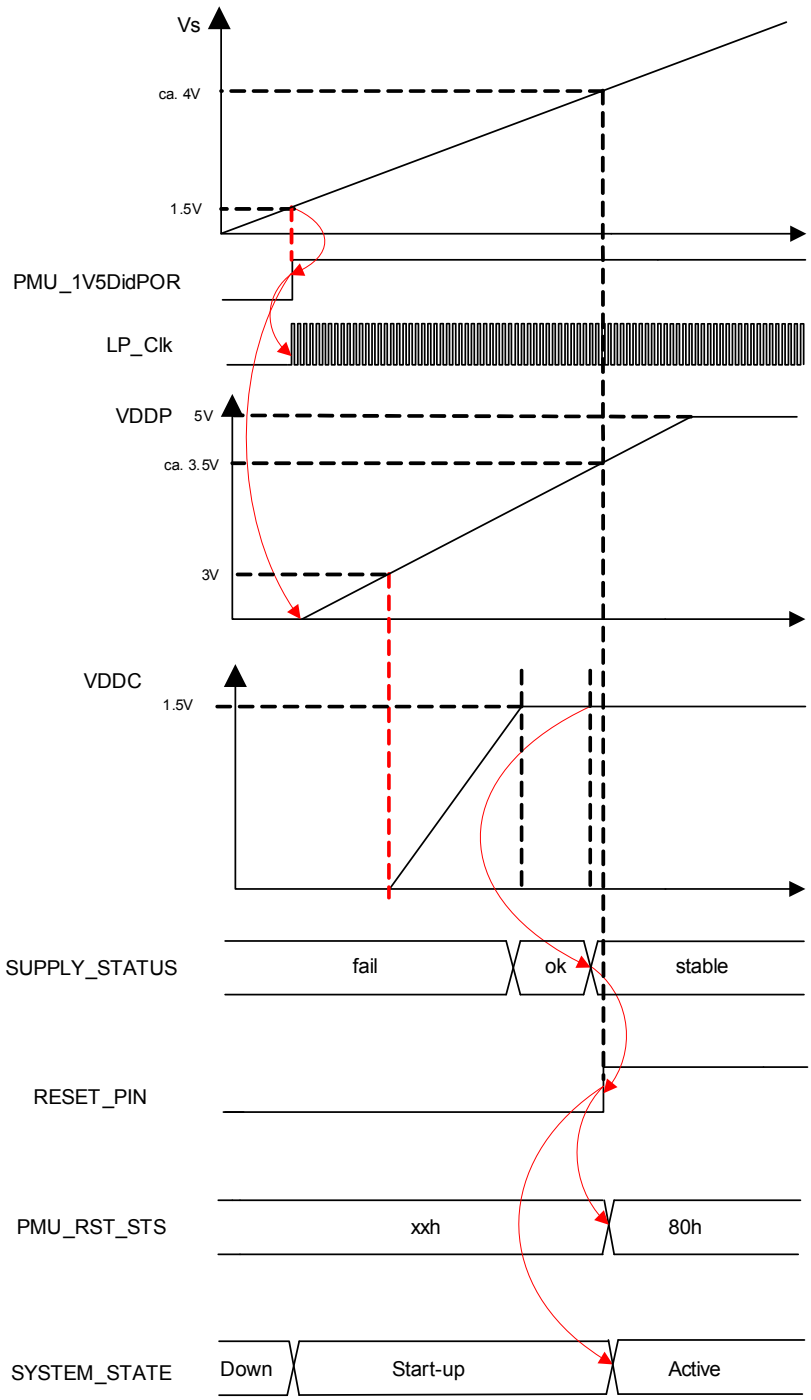

Figure 14 Power-on Reset Concept

6.3.5 PMU Register Overview

Table 8 Register Address Space for PMU Register s

Module	Base Address	End Address	Note
PMU	50004000_H	$50004FFF_H$	Power Management Unit Registers
SCUPM	50006000_H	$50006FFF_H$	Power Management Unit Registers

The registers are addressed wordwise.

6.3.6 Register Definition

Table 9 Register Overview

Register Short Name	Register Long Name	Offset Address	Reset Value
Register Definition, Power Supply Generation Register			
PMU_SUPPLY_STS	Voltage Reg Status Register	008_H	$0000\ 0000_H$
Register Definition, VDDEXT Control Register			
PMU_VDDEXT_CTRL	VDDEXT Control	$00C_H$	$0000\ 0000_H$

The registers are addressed wordwise.

6.3.6.1 Power Supply Generation Register

The following register is dedicated to control the voltage regulators VDDP, VDDC. It provides an overview about the status of the two voltage supplies.

Voltage Reg Status Register

The PMU_SUPPLY_STS register shows the overvoltage and overload condition of VDDP and VDDC. To use this information as interrupt sources it must be selected explicitly in this register.

PMU_SUPPLY_STS	Offset	Reset Value
Voltage Reg Status Register	**008_H**	**see Table 10**

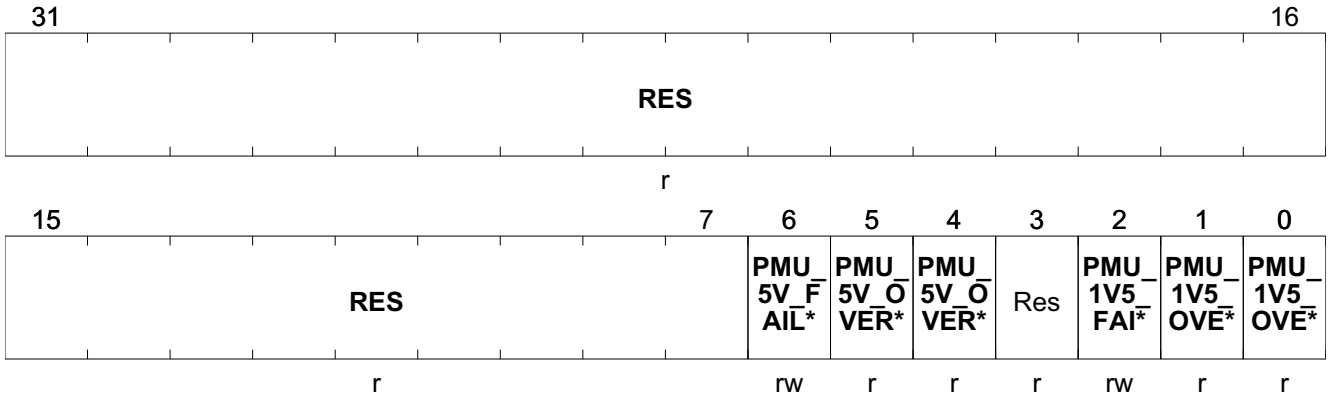

Field	Bits	Type	Description
RES	31:7	r	**Reserved** Always read as 0
PMU_5V_FAIL_EN	6	rw	**Enabling of VDDP status information as interrupt source** 0_B No interrupts are generated 1_B Interrupts are generated
PMU_5V_OVERLOAD	5	r	**Overload at VDDP regulator** *Note: if this flag is set and an additional filter time of 290 us (typ.) is passed the system will be put to sleep mode. This flag is automatically cleared, if error condition is removed.* 0_B No overload 1_B Overload
PMU_5V_OVERVOLT	4	r	**Overvoltage at VDDP regulator** *Note: This flag is automatically cleared, if error condition is removed.* 0_B No overvoltage 1_B Overvoltage
Res	3	r	**Reserved** Always read as 0
PMU_1V5_FAIL_EN	2	rw	**Enabling of VDDC status information as interrupt source** 0_B No interrupts are generated 1_B Interrupts are generated
PMU_1V5_OVERLOAD	1	r	**Overload at VDDC regulator** *Note: if this flag is set and an additional filter time of 290 us (typ.) is passed the system will be put to sleep mode. This flag is automatically cleared, if error condition is removed.* 0_B No overload 1_B Overload

Field	Bits	Type	Description
PMU_1V5_OVERVOLT	0	r	**Overvoltage at VDDC regulator** *Note: This flag is automatically cleared, if error condition is removed.* 0_B No overvoltage 1_B Overvoltage

Table 10 RESET of PMU_SUPPLY_STS

Register Reset Type	Reset Values	Reset Short Name	Reset Mode	Note
RESET_TYPE_3	00000000_H	RESET_TYPE_3		Reset Mask: 00000044_H
RESET_TYPE_0	00000000_H	RESET_TYPE_0		Reset Mask: $000000BB_H$

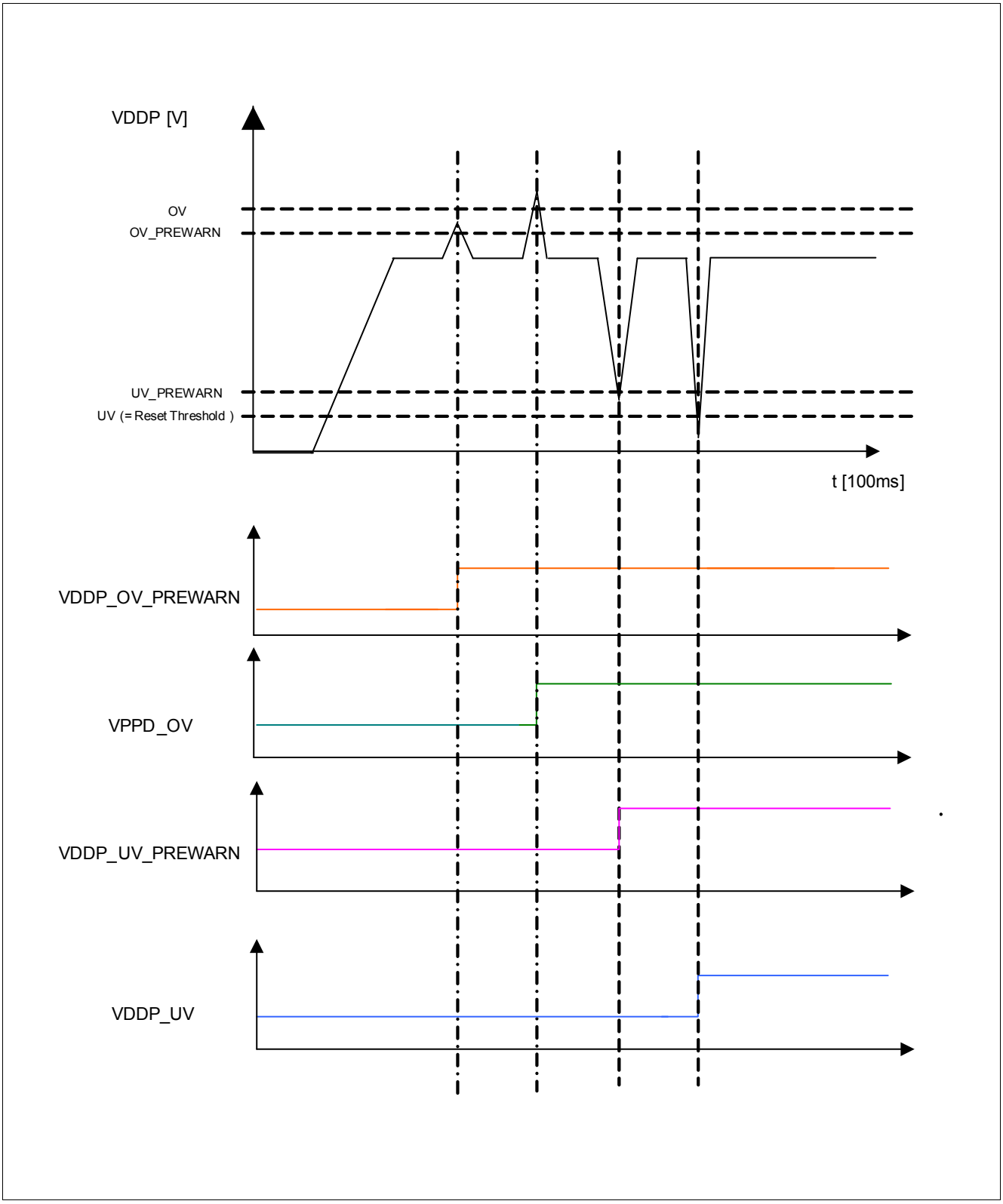

Figure 15 VDDP

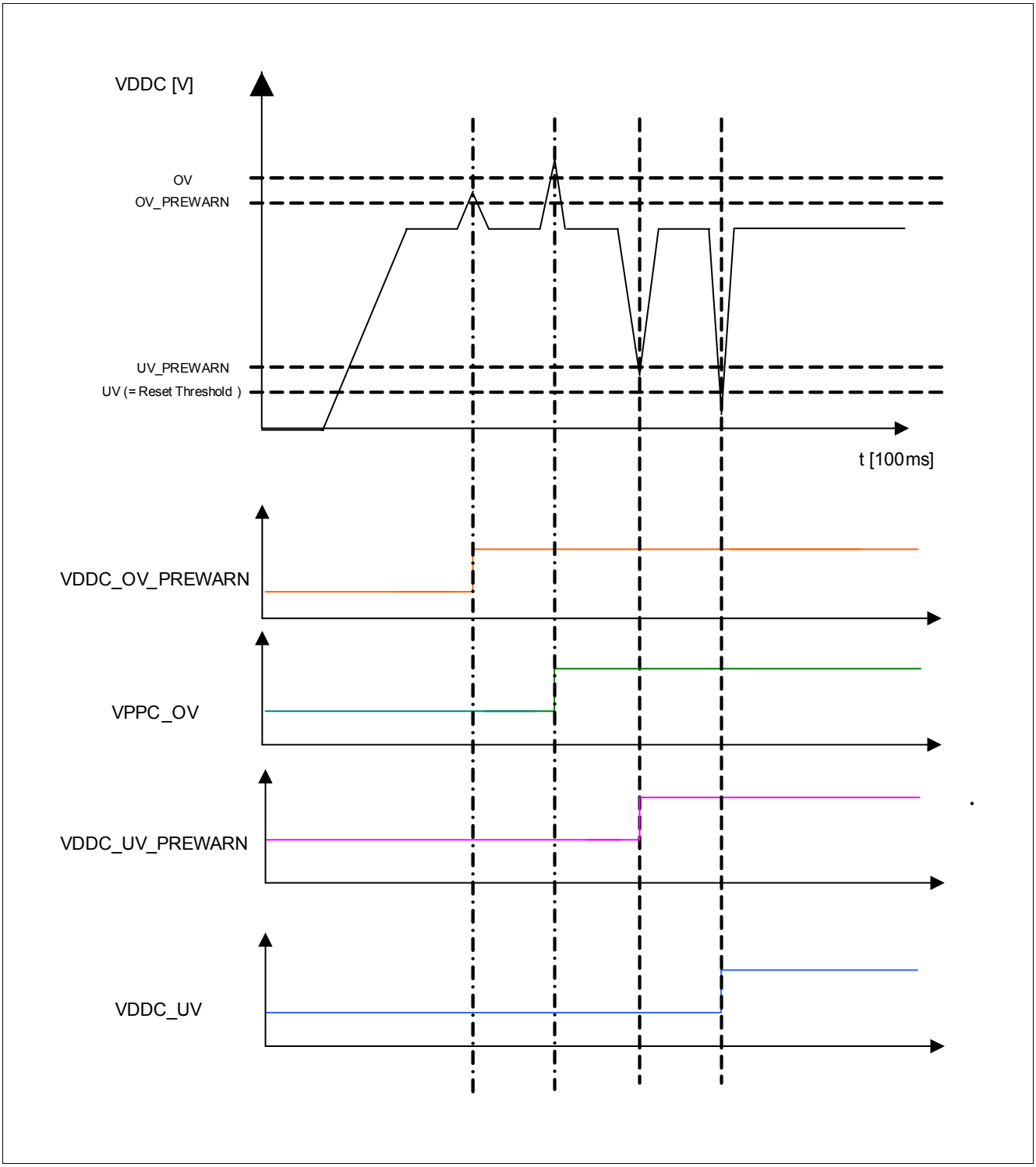

Figure 16 VDDC

6.3.6.2 VDDEXT Control Register

The VDDEXT can be fully controlled by the following SFR Register, including all diagnosis functions.

VDDEXT Control

PMU_VDDEXT_CTRL	Offset	Reset Value
VDDEXT Control	$00C_H$	see Table 11

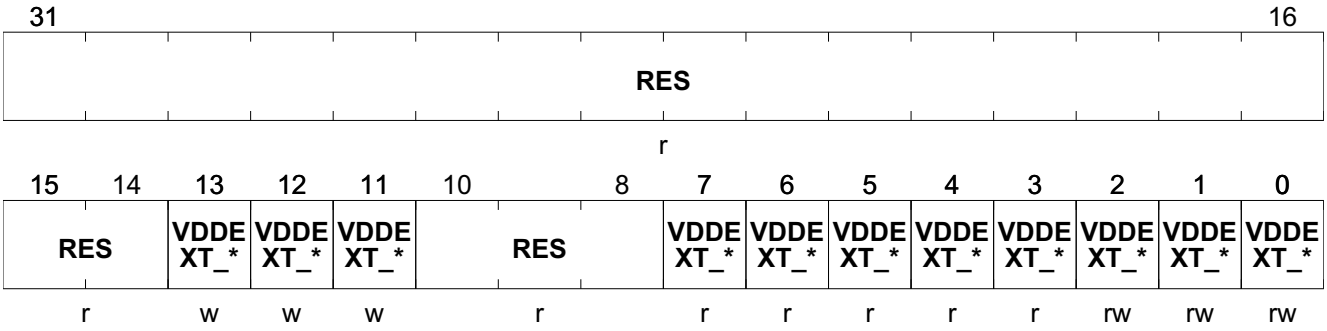

Field	Bits	Type	Description
RES	31:14	r	**Reserved** Always read as 0
VDDEXT_OT_SC	13	w	**VDDEXT Supply Overtemperature Status clear** 1_B VDDEXT Overtemperature status cleared 0_B VDDEXT Overtemperature status not cleared
VDDEXT_UV_ISC	12	w	**VDDEXT Supply Undervoltage Interrupt Status clear** 1_B VDDEXT Undervoltage cleared 0_B VDDEXT Undervoltage not cleared
VDDEXT_OT_ISC	11	w	**VDDEXT Supply Overtemperature Interrupt Status clear** 1_B VDDEXT Overtemperature cleared 0_B VDDEXT Overtemperature not cleared
RES	10:8	r	**Reserved** Always read as 0
VDDEXT_STABLE	7	r	**VDDEXT Supply Stable** 0_B VDDEXT not in stable condition 1_B VDDEXT in stable condition
VDDEXT_OT	6	r	**VDDEXT Supply Overtemperature** 0_B VDDEXT not in overtemperature condition 1_B VDDEXT in overtemperature condition
VDDEXT_OT_STS	5	r	**VDDEXT Supply Overtemperature Status** 0_B VDDEXT not in overtemperature condition 1_B VDDEXT in overtemperature condition
VDDEXT_UV_IS	4	r	**VDDEXT Supply Undervoltage Interrupt Status** 0_B VDDEXT not in undervoltage condition 1_B VDDEXT in undervoltage condition
VDDEXT_OT_IS	3	r	**VDDEXT Supply Overtemperature Interrupt Status** 0_B VDDEXT no overtemperature condition 1_B VDDEXT overtemperature condition

Field	Bits	Type	Description
VDDEXT_FAIL_EN	2	rw	**Enabling of VDDEXT Supply status information as interrupt source** 0_B VDDEXT fail interrupts are disabled 1_B VDDEXT fail Interrupts are enabled
VDDEXT_CYC_EN	1	rw	**VDDEXT Supply for Cyclic Sense Enable** *Note: To use VDDEXT Supply for cyclic sense the bits VDDEXT_CYC_EN AND VDDEXT_ENABLE must be set* 0_B VDDEXT for cyclic sense disable 1_B VDDEXT for cyclic sense enable
VDDEXT_ENABLE	0	rw	**VDDEXT Supply Enable** 0_B VDDEXT Supply disabled 1_B VDDEXT supply enabled

Table 11 RESET of PMU_VDDEXT_CTRL

Register Reset Type	Reset Values	Reset Short Name	Reset Mode	Note
RESET_TYPE_3	00000000_H	RESET_TYPE_3		

6.4 Power Control Unit

The Power Control Unit is the controlling instance of the system power supply generation (PSG). It offers important fail safe features, which are described in the next chapter.

6.4.1 Power Control Unit - Fail Safe Scenarios

The PMU handles several different failure scenarios, listed below and described in the following chapters:

- Fail safe mode (Sleep Mode) in case of power failure.
- Fail safe mode (Sleep Mode) in case of watchdog service failure.
- Fail safe mode (Sleep Mode) in case of overcurrent on voltage regulators VDDP or VDDC.
- 2 level monitoring (prewarning and reset) of voltage regulators output voltages (VDDP, VDDC, VDDEXT).
- Wake-up from Stop Mode with cyclic sense in case of VDDEXT regulator failures.
- Wake-up from Stop Mode in case of hardware reset on RESET pin.

6.4.1.1 Power Supervision Function of PCU

The power supervision feature of the PCU is mainly responsible for monitoring the voltage regulators VDDP and VDDC. In case of voltage regulator malfunction, the PCU restarts the voltage regulators (VDDP and VDDC). Each time this happens the error counter “error_supp” is incremented. If the counter reaches the value 5, the PCU supervision function will set the device into Sleep Mode. In this case the device is still wakeable by LIN and MON input.

After a wake-up, if the PMU can be successfully restarted and code execution will be possible, the user is able to determine the occurred failure scenario by checking the corresponding **PMU_WFS** register. In this case bit **SUPP_TMOUT** is set.

If there is a short circuit at the VDDC/VDDP voltage regulator during startup, the reset of the embedded MCU is set and the system goes to startup mode. The error counter “error_supp” is increased by one. After this the PCU

itself tries to go to Active Mode again using the power-on sequence. If the short circuit still exists then the procedure is repeated. This procedure will run, as already described above, only 5 times. After reaching the value 5, the PCU sends the system into Sleep Mode.

If a successful startup after wake-up from Sleep Mode is possible, the user is able to verify the failure, by reading the **SUPP_TMOUT** flag in the **PMU_WFS** register.

6.4.1.2 Watchdog (WDT1) Fail Safe

The PCU supervises the failure information of the system watchdog (WDT1). In case the watchdog is not serviced or serviced in a wrong way (in the following denominated as “not serviced Watchdog”) the MCU is reset and the error counter “error_wdt” is increased by one. The PMU itself stays in the Active Mode and after the reset the application software takes over the system control. If the software doesn’t service the system watchdog then the described procedure starts again. After the watchdog is not serviced five times during one Active Mode period the PMU sends the embedded system to Sleep Mode. The PMU detects the transition to the Sleep Mode as safety fallback and the Sleep Mode can be terminated only by a LIN-wake or by a rising/falling edge at a MON pin. The error counter is reset when the system is sent to Sleep Mode or Stop Mode by a corresponding software command.

If the system can be successfully restarted, the cause of failure can be again checked by reading the **PMU_WFS** register. The bit **WDT1_SEQ_FAIL** signals the described failure.

6.4.1.3 Main Regulators Fail Safe

If one of the voltage regulators needs to deliver too much current, a stable operation of the supply voltage is not given. In this case the overcurrent detection of VDDP and VDDC will ensure that the system will enter Sleep Mode.

If the overcurrent condition is gone, a wake-up can be invoked, then the system will startup and work properly. Afterwards the corresponding failure flags **PMU_1V5_OVL** and PMU_5V_OVL can be checked.

6.4.1.4 VDDEXT Failure

If VDDEXT is used in combination with the GPIOs as a supply e.g. for the switches, there are several error cases possible, which are: Overtemperature, undervoltage. Those error cases may lead to the generation of false wake-up events or to missed wake-up events. To avoid these scenarios, errors on the VDDEXT voltage regulator would automatically revive the system from Stop Mode. The errors are signalled in the **PMU_WAKE_STATUS** register.

6.4.1.5 Wake-Up from Stop Mode with Reset Fail Safe

One fail safe measure to wake-up the embedded system from the Stop-Mode can be executed by hardware reset. If there is a reset request on the reset-pin then the PMU goes to Active Mode. Simultaneously, the embedded system gets a reset which is shown by forcing the bidirectional reset-pin. The reset-pin goes high again if the PMU releases the MCU reset. This event is shown in the reset status register as a hard-reset together with a wake-up reset. In case of a fail condition at one of the voltage regulators the PMU also goes to Active Mode. After that the PMU starts the supply fail-safe procedure which is described in the Active Mode section. The described sequence can be seen in the picture below.

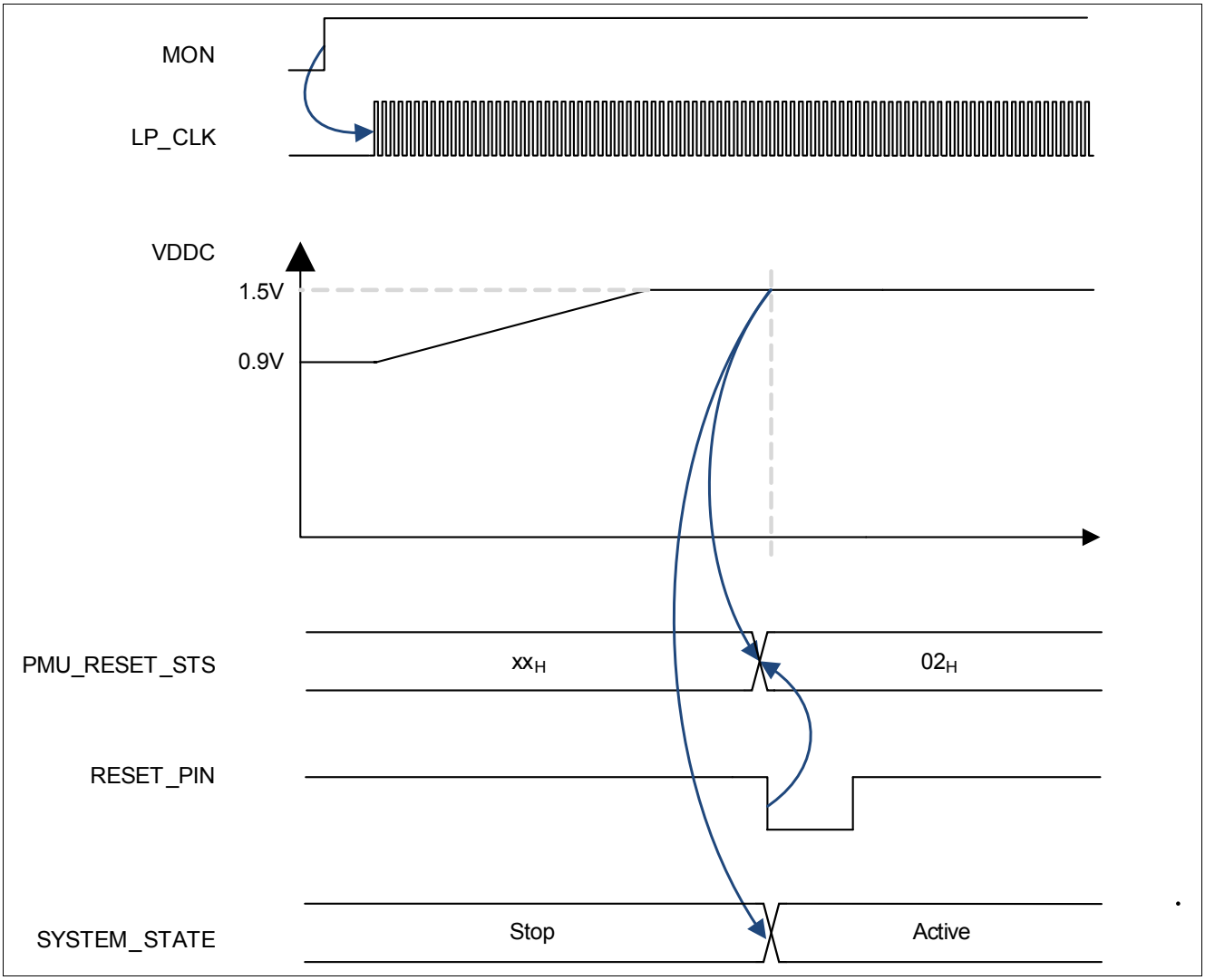

Figure 17 Stop Mode Exit Timing with Reset

6.4.1.6 Register Definition

Table 12 Register Overview

Register Short Name	Register Long Name	Offset Address	Reset Value
Register Definition, PMU System Fail Register			
PMU_HIGHSIDE_CTRL	High-Side Control Register	$05C_H$	$0000\ 0000_H$
PMU_WFS	WFS System Fail Register	070_H	$0000\ 0000_H$
PMU_CPREG_CNF	GPREG CNF	$07C_H$	$0000\ 0000_H$

The registers are addressed wordwise.

6.4.1.6.1 PMU System Fail Register

This register is dedicated for the control of the PMU Peripherals

WFSSystem Fail Register

Note: The register SYS_FAIL_STS is also cleared when **PMU_RESET_STS**.SYS_FAIL) is cleared

PMU_WFS	Offset	Reset Value
WFS System Fail Register	**070_H**	**see Table 13**

31	30	29	28	27	26	25	24	23	22	21	20	19	18	17	16
RES															
r															

15	14	13	12	11	10	9	8	7	6	5	4	3	2	1	0
RES								LP_CLKWD	WDT1_SE*	SYS_OT	SYS_CLK*	PMU_5V_*	PMU_1V5*	SUPP_TM*	SUPP_SH*
r								r	rh	rh	rh	rh	rh	rh	rh

Field	Bits	Type	Description
RES	31:8	r	**Reserved** Always read as 0
LP_CLKWD	7	r	**LP_CLKWD** Low power clock 0_B ok 1_B fail

Field	Bits	Type	Description
WDT1_SEQ_FAIL	6	rh	**External Watchdog (WDT1) Sequential Fail** Indicates that Watchdog is not serviced 5 times 0_B **No Fail** System working properly 1_B **Sequential Watchdog Fail** 5 consecutive watchdog fails
SYS_OT	5	rh	**System Overtemperature Indication Flag** Indicates System Overtemperature Condition 0_B **No Overtemperature** System ok 1_B **Overtemperature** System Overtemperature
SYS_CLK_WDT	4	rh	**System Clock (f_{sys})Watchdog Fail** Indicates a system clock watchdog fail 0_B **No System Clock Fail** f_{sys} ok 1_B **System Clock Fail** f_{sys} failed
PMU_5V_OVL	3	rh	**VDDP Overload Flag** Indicates Overload Condition at VDDP 0_B **No Overload** VDDP ok 1_B **Overload** VDDP Overload
PMU_1V5_OVL	2	rh	**VDDC Overload Flag** Indicates Overload Condition at VDDC 0_B **No Overload** VDDC ok 1_B **Overload** Hall VDDC Overload
SUPP_TMOUT	1	rh	**Supply Time Out** Indicates the status of the Main Supply (VDDP & VDDC) after a certain time of Power-on reset 0_B **Main Supply ok** VDDP or VDDC are in expected range 1_B **Main Supply fail** VDDP or VDDC do not have stable operating point
SUPP_SHORT	0	rh	**Supply Short** Indicates the status of the Main Supply (VDDP & VDDC) after a certain time of Power-on reset 0_B **Main Supply ok** VDDP or VDDC are in expected range 1_B **Main Supply short** VDDP or VDDC do not have stable operating point

Table 13 RESET of PMU_WFS

Register Reset Type	Reset Values	Reset Short Name	Reset Mode	Note
RESET_TYPE_0	00000000_H	RESET_TYPE_0		

High-side Control Register

PMU_HIGHSIDE_CTRL	Offset	Reset Value
High-side Control Register	$05C_H$	see Table 14

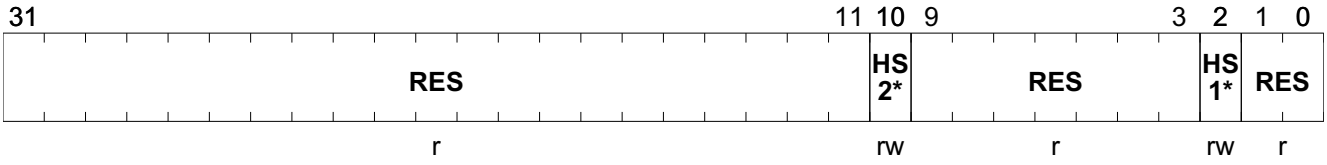

Field	Bits	Type	Description
RES	31:11	r	**Reserved** Always read as 0
HS2_CYC_EN	10	rw	**High-side 2 switch enable for cyclic sense** 0_B **Disable** 1_B **Enable**
RES	9:3	r	**Reserved** Always read as 0
HS1_CYC_EN	2	rw	**High-side 1 switch enable for cyclic sense** 0_B **Disable** 1_B **Enable**
RES	1:0	r	**Reserved** Always read as 0

Table 14 RESET of PMU_HIGHSIDE_CTRL

Register Reset Type	Reset Values	Reset Short Name	Reset Mode	Note
RESET_TYPE_2	00000000_H	RESET_TYPE_2		

GPREG CNF

PMU_CPREG_CNF	Offset	Reset Value
GPREG CNF	$07C_H$	see Table 15

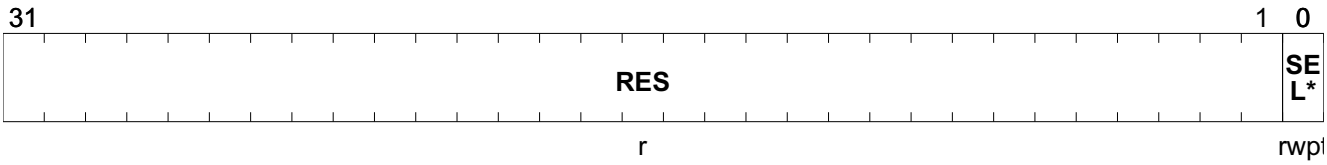

Field	Bits	Type	Description
RES	31:1	r	**Reserved** Always read as 0

Field	Bits	Type	Description
SEL_GPIO	0	rwpt	**SEL_GPIO** *Note: This flag selects the purpose of GPUDATA register 8-11. A write operation to this register clears GPUDATA 8-11.* 0_B GPUDATA 8-11 is used as storage area (default, cannot be changed by the user) 1_B GPUDATA 8-11 is used as configuration data for cyclic sense mode together with GPIO (not selectable)

Table 15 RESET of PMU_CPREG_CNF

Register Reset Type	Reset Values	Reset Short Name	Reset Mode	Note
RESET_TYPE_1	00000000_H	RESET_TYPE_1		

6.5 Wake-up Management Unit (WMU)

The Wake-up Management Unit (WMU) is mainly responsible for handling the wake-up events on LIN, HV-Monitoring Inputs (MON1 - MON4), Hardware reset and all GPIOs belonging to Port 0 and Port 1. Following wake scenarios are possible:

- **Wake-up over Port 0 and Port 1 pins:** they can be configured for rising edge triggered and falling edge triggered wake-up events. This configuration can be used to wake-up the device from normal Stop Mode and Stop Mode with cyclic sense option. To bias the GPIOs, VDDEXT as current source can be used. The wake-up feature from Sleep Mode in combination with GPIOs is not possible.
- **Wake-up over Hardware reset pin:** It can be used to wake-up the device from Stop Mode. The wake-up feature from Sleep Mode is not possible.
- **Wake-up over MON1 - MON4 Pins:** the MONx Pins can be configured for rising edge triggered and falling edge triggered wake-up events. This setup can be used to wake-up the device from Stop Mode with or without cyclic sense, but also a wake-up from Sleep Mode with or without cyclic sense is possible.
- **LIN:** is a normal wake-up source and has no configuration possibilities.
- **Wake-up on VDDEXT fail from Stop Mode:** will be performed in case of VDDEXT failures described in Chapter **Power Control Unit - Fail Safe Scenarios**.
- **Wake-up on high-side overtemperature from Stop / Sleep Mode:** will be performed in case of high-side overtemperature failures described in Chapter **Power Control Unit - Fail Safe Scenarios**.

Note:

1. *Port 2 pins cannot invoke any wake-up.*
2. *None of the GPIOs is supplied during Sleep Mode, therefore wake-up is not possible through them.*

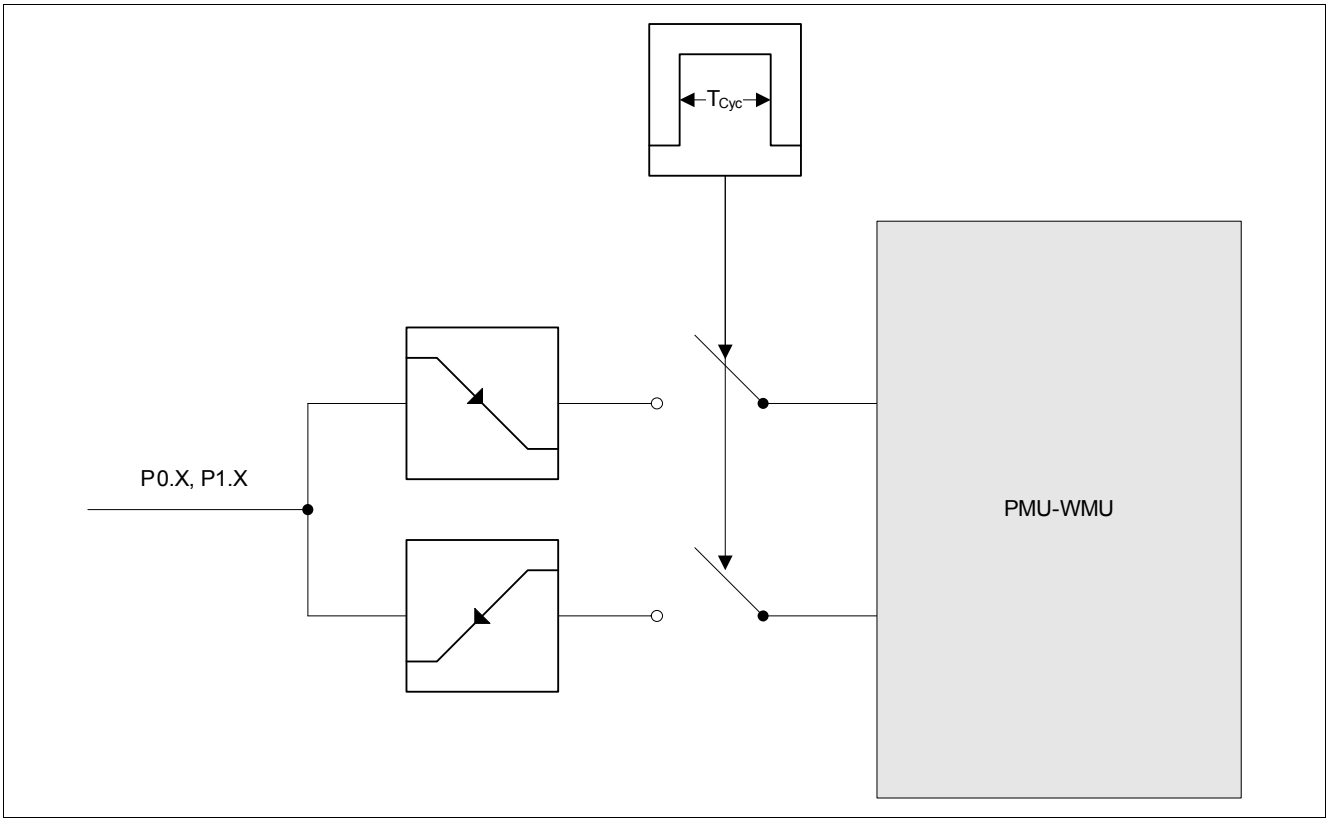

Figure 18 Block Diagram of Wake-up Management Unit in Cyclic Sense Mode with VDDEXT.

6.5.1 Register Definition

These registers are for wake-up control of all wake-up capable general purpose inputs outputs

The WMU is fully controllable by the below listed SFR Registers.

Table 16 Register Overview

Register Short Name	Register Long Name	Offset Address	Reset Value
Register Definition, PMU Wake Up Configuration Register			
PMU_LIN_WAKE_EN	LIN Wake Enable	050_H	0000 0000_H
PMU_CNF_WAKE_FILTER	PMU Wake-up Timing Register	$0AC_H$	0000 0000_H
PMU_WAKE_CNF_GPIO0	Wake Configuration GPIO Port 0 Register	$0C8_H$	0000 0000_H
PMU_WAKE_CNF_GPIO1	Wake Configuration GPIO Port 1 Register	$0CC_H$	0000 0000_H
Register Definition, PMU Wake Up Status Register			
PMU_WAKE_STATUS	Main wake status register	000_H	0000 0000_H
Register Definition, GPIO Port Wake Up Status Register			
PMU_GPIO_WAKE_STATUS	GPIO Port wake status register	004_H	0000 0000_H

The registers are addressed wordwise.

6.5.1.1 PMU Wake Up Configuration Register

This register is dedicated for the control of the PMU Peripherals

Wake Configuration GPIO Port 1 Register

PMU_WAKE_CNF_GPIO1	Offset	Reset Value
Wake Configuration GPIO Port 1 Register	$0CC_H$	see Table 17

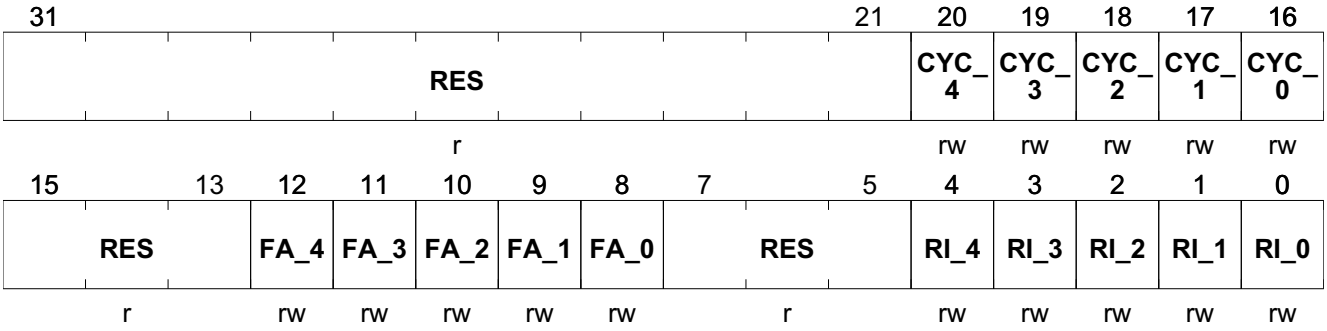

Field	Bits	Type	Description
RES	31:21	r	**Reserved** Always read as 0
CYC_4	20	rw	**GPIO1_4 input for cycle sense enable** 1_B **ENABLE** input for cycle sense enabled 0_B **DISABLE** input for cycle sense disabled
CYC_3	19	rw	**GPIO1_3 input for cycle sense enable** 1_B **ENABLE** input for cycle sense enabled 0_B **DISABLE** input for cycle sense disabled
CYC_2	18	rw	**GPIO1_2 input for cycle sense enable** 1_B **ENABLE** input for cycle sense enabled 0_B **DISABLE** input for cycle sense disabled
CYC_1	17	rw	**GPIO1_1 input for cycle sense enable** 1_B **ENABLE** input for cycle sense enabled 0_B **DISABLE** input for cycle sense disabled
CYC_0	16	rw	**GPIO1_0 input for cycle sense enable** 1_B **ENABLE** input for cycle sense enabled 0_B **DISABLE** input for cycle sense disabled
RES	15:13	r	**Reserved** Always read as 0
FA_4	12	rw	**Port 1_4 Wake-up on Falling Edge enable** 1_B **ENABLE** wake-up enabled 0_B **DISABLE** wake-up disabled
FA_3	11	rw	**Port 1_3 Wake-up on Falling Edge enable** 1_B **ENABLE** wake-up enabled 0_B **DISABLE** wake-up disabled
FA_2	10	rw	**Port 1_2 Wake-up on Falling Edge enable** 1_B **ENABLE** wake-up enabled 0_B **DISABLE** wake-up disabled

Field	Bits	Type	Description
FA_1	9	rw	**Port 1_1 Wake-up on Falling Edge enable** 1_B **ENABLE** wake-up enabled 0_B **DISABLE** wake-up disabled
FA_0	8	rw	**Port 1_0 Wake-up on Falling Edge enable** 1_B **ENABLE** wake-up enabled 0_B **DISABLE** wake-up disabled
RES	7:5	r	**Reserved** Always read as 0
RI_4	4	rw	**Port 1_4 Wake-up on Rising Edge enable** 1_B **ENABLE** wake-up enabled 0_B **DISABLE** wake-up disabled
RI_3	3	rw	**Port 1_3 Wake-up on Rising Edge enable** 1_B **ENABLE** wake-up enabled 0_B **DISABLE** wake-up disabled
RI_2	2	rw	**Port 1_2 Wake-up on Rising Edge enable** 1_B **ENABLE** wake-up enabled 0_B **DISABLE** wake-up disabled
RI_1	1	rw	**Port 1_1 Wake-up on Rising Edge enable** 1_B **ENABLE** wake-up enabled 0_B **DISABLE** wake-up disabled
RI_0	0	rw	**Port 1_0 Wake-up on Rising Edge enable** 1_B **ENABLE** wake-up enabled 0_B **DISABLE** wake-up disabled

Table 17 RESET of PMU_WAKE_CNF_GPIO1

Register Reset Type	Reset Values	Reset Short Name	Reset Mode	Note
RESET_TYPE_3	00000000_H	RESET_TYPE_3		

PMU Wake-up Timing Register

These registers are for wake-up control of all wake-up capable general purpose inputs outputs

PMU_CNF_WAKE_FILTER	Offset	Reset Value
PMU Wake-up Timing Register	$0AC_H$	see Table 18

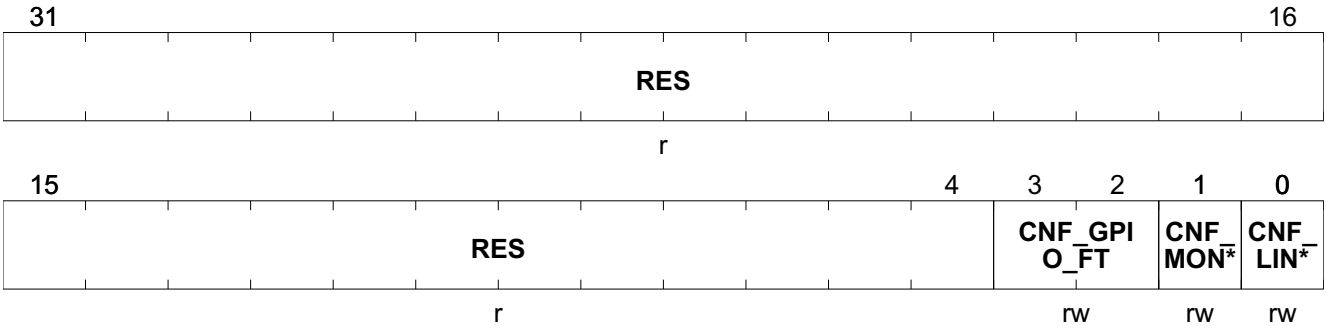

Field	Bits	Type	Description
RES	31:4	r	**Reserved** Always read as 0.
CNF_GPIO_FT	3:2	rw	**Wake-up Filter time for General Purpose IO** Selects the filter time for the Wake-up 00_B **10_us** 10 µs filter time 01_B **20_us** 20 µs filter time 10_B **40_us** 40 µs filter time 11_B **5_us** 5 µs filter time
CNF_MON_FT	1	rw	**Wake-up Filter time for Monitoring Inputs** Selects the filter time for the Wake-up 0_B **20_us** 20 µs filter time 1_B **40_us** 40 µs filter time
CNF_LIN_FT	0	rw	**Wake-up Filter time for LIN WAKE** Selects the filter time for the Wake-up 0_B **30_us** 30 µs filter time 1_B **50_us** 50 µs filter time

Table 18 RESET of PMU_CNF_WAKE_FILTER

Register Reset Type	Reset Values	Reset Short Name	Reset Mode	Note
RESET_TYPE_2	00000000_H	RESET_TYPE_2		

LIN Wake Enable

PMU_LIN_WAKE_EN	Offset	Reset Value
LIN Wake Enable	050_H	see Table 19

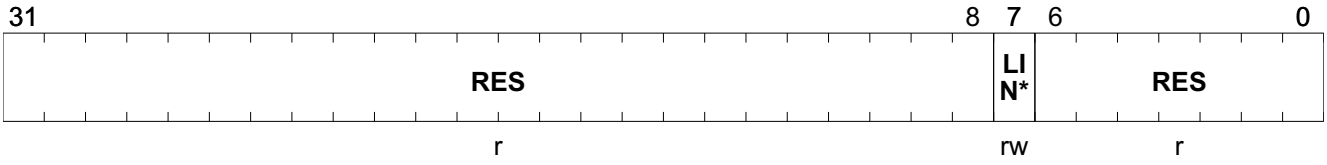

Field	Bits	Type	Description
RES	31:8	r	**Reserved** Always read as 0
LIN_EN	7	rw	**Lin Wake enable** 0_B **Disable** 1_B **Enable**
RES	6:0	r	**Reserved** Always read as 0

Table 19 RESET of PMU_LIN_WAKE_EN

Register Reset Type	Reset Values	Reset Short Name	Reset Mode	Note
RESET_TYPE_2	00000000_H	RESET_TYPE_2		

6.5.1.2 PMU Wake Up Status Register

Main wake status register

PMU_WAKE_STATUS	Offset	Reset Value
Main wake status register	**000_H**	**see Table 20**

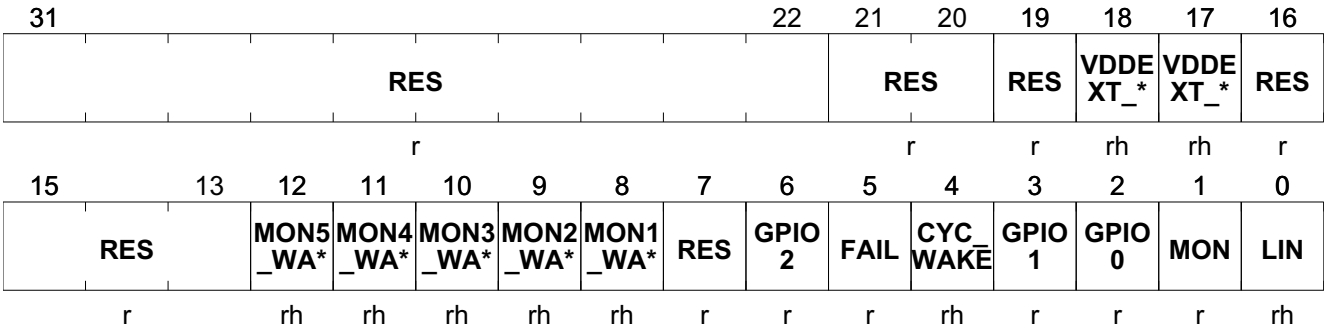

Field	Bits	Type	Description
RES	31:22	r	**Reserved** Always read as 0
RES	21:20	r	**Reserved** Always read as 0
RES	19	r	**Reserved** Always read as 0

Field	Bits	Type	Description
VDDEXT_UV	18	rh	**Wake VDDEXT Undervoltage** *Note: this register is cleared automatically by read operation* 0_B **No wake-up detected** 1_B **wake-up detected**
VDDEXT_OT	17	rh	**Wake VDDEXT Overtemperature** *Note: this register is cleared automatically by read operation* 0_B **No wake-up detected** 1_B **wake-up detected**
RES	16:13	r	**Reserved** Always read as 0
MON5_WAKE_STS	12	rh	**Status of MON5** *Note: this register is cleared automatically by read operation* 0_B **No wake-up detected** 1_B **wake-up detected**
MON4_WAKE_STS	11	rh	**Status of MON4** *Note: this register is cleared automatically by read operation* 0_B **No wake-up detected** 1_B **wake-up detected**
MON3_WAKE_STS	10	rh	**Status of MON3** *Note: this register is cleared automatically by read operation* 0_B **No wake-up detected** 1_B **wake-up detected**
MON2_WAKE_STS	9	rh	**Status of MON2** *Note: this register is cleared automatically by read operation* 0_B **No wake-up detected** 1_B **wake-up detected**
MON1_WAKE_STS	8	rh	**Status of MON1** *Note: this register is cleared automatically by read operation* 0_B **No wake-up detected** 1_B **wake-up detected**
RES	7	r	**Reserved** Always read as 0

Field	Bits	Type	Description
GPIO2	6	r	**Wake-up via GPIO2 which is a logical OR combination of all Wake_STS_GPIO2 bits** 0_B No Wake-up occurred 1_B Wake-up occurred
FAIL	5	r	**Wake-up after VDDEXT Fail** 0_B No Wake-up occurred 1_B Wake-up occurred
CYC_WAKE	4	rh	**Wake-up caused by Cyclic Wake** *Note: this register is cleared automatically by read operation* 0_B No Wake-up occurred 1_B Wake-up occurred
GPIO1	3	r	**Wake-up via GPIO1 which is a logical OR combination of all Wake_STS_GPIO1 bits** 0_B No Wake-up occurred 1_B Wake-up occurred
GPIO0	2	r	**Wake-up via GPIO0 which is a logical OR combination of all Wake_STS_GPIO0 bits** 0_B No Wake-up occurred 1_B Wake-up occurred
MON	1	r	**Wake-up via MON which is a logical OR combination of all Wake_STS_MON bits** 0_B No Wake-up occurred 1_B Wake-up occurred
LIN	0	rh	**Wake-up via LIN- Message** *Note: this register is cleared automatically by read operation* 0_B No Wake-up occurred 1_B Wake-up occurred

Table 20 RESET of PMU_WAKE_STATUS

Register Reset Type	Reset Values	Reset Short Name	Reset Mode	Note
RESET_TYPE_1	00000000_H	RESET_TYPE_1		

6.5.1.3 GPIO Port Wake Up Status Register

GPIO Port wake status register

PMU_GPIO_WAKE_STATUS	Offset	Reset Value
GPIO Port wake status register	004_H	see Table 21

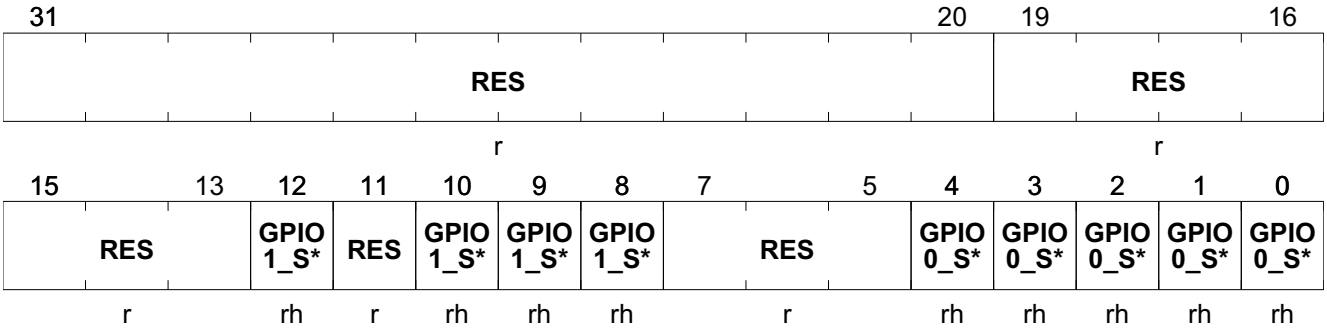

Field	Bits	Type	Description
RES	31:20	r	**Reserved** Always read as 0
RES	19:13	r	**Reserved** Always read as 0
GPIO1_STS_4	12	rh	**Wake GPIO1_4** 0_B **No wake-up detected** 1_B **wake-up detected**
RES	11	r	**Reserved** Always read as 0
GPIO1_STS_2	10	rh	**Wake GPIO1_2** 0_B **No wake-up detected** 1_B **wake-up detected**
GPIO1_STS_1	9	rh	**Wake GPIO1_1** 0_B **No wake-up detected** 1_B **wake-up detected**
GPIO1_STS_0	8	rh	**Wake GPIO1_0** 0_B **No wake-up detected** 1_B **wake-up detected**
RES	7:5	r	**Reserved** Always read as 0
GPIO0_STS_4	4	rh	**Status of GPIO0_4** 0_B **No wake-up detected** 1_B **wake-up detected**
GPIO0_STS_3	3	rh	**Status of GPIO0_3** 0_B **No wake-up detected** 1_B **wake-up detected**
GPIO0_STS_2	2	rh	**Status of GPIO0_2** 0_B **No wake-up detected** 1_B **wake-up detected**
GPIO0_STS_1	1	rh	**Status of GPIO0_1** 0_B **No wake-up detected** 1_B **wake-up detected**
GPIO0_STS_0	0	rh	**Status of GPIO0_0** 0_B **No wake-up detected** 1_B **wake-up detected**

Table 21 RESET of PMU_GPIO_WAKE_STATUS

Register Reset Type	Reset Values	Reset Short Name	Reset Mode	Note
RESET_TYPE_1	00000000_H	RESET_TYPE_1		

6.6 Cyclic Management Unit (CMU)

The cyclic management unit is responsible for controlling the timing sequence in cyclic sense or cyclic wake operation. The unit operates with the LP_CLK2 clock.

6.6.1 Cyclic Sense Mode

To select a dedicated MONx pin for cyclic sense mode, the bit MONx_CYC must be set in the corresponding **MONx_CTRL_STS** register. In this configuration the wake-up information of this MON pin is only accepted during the sensing time where the HS_CYC_ON (internal HSx_ON gating signal) is high (see **Figure 19**). The sensing time where the enable signal is active, will be set in the **PMU_SLEEP**. The flags inside **PMU_SLEEP** register are used to configure the dead time (T_{Dead}). The **PMU_SLEEP.CYC_SENSE_S_DEL** register is used to program the sample delay of the wake inputs and thus the on-time (T_{On})

After a valid wake-up event the start-up sequence is similar to the asynchronous wake-up and the system enters the Start-up Mode automatically too. If the PMU detects a wake-up during Cyclic Sense then the enable signal of the current source (HS) stays active as long the application software doesn't disable these signals.

Figure 19 illustrates the principle of the cyclic sense mode. Here a high-side switch is used as current source together with a MONx pin as a wake-up source. The same timing flow can also be applied for cyclic operation with VDDEXT and all GPIOs from Port 0 and Port 1.

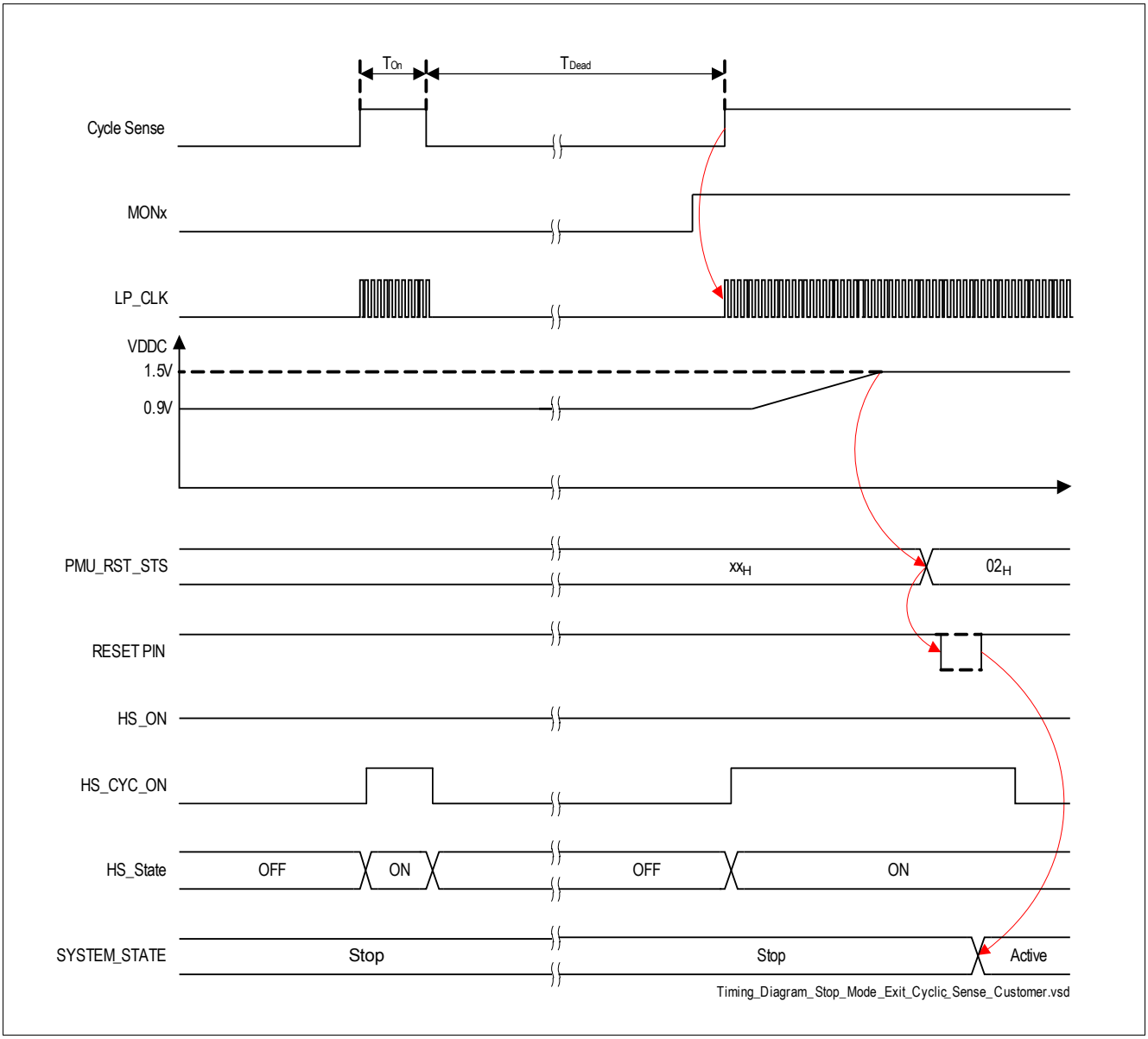

Figure 19 Timing Diagram for Cyclic Sense

6.6.1.1 Configuration of Cyclic Sense Mode

The configuration of cyclic sense mode is shown in **Figure 20**.

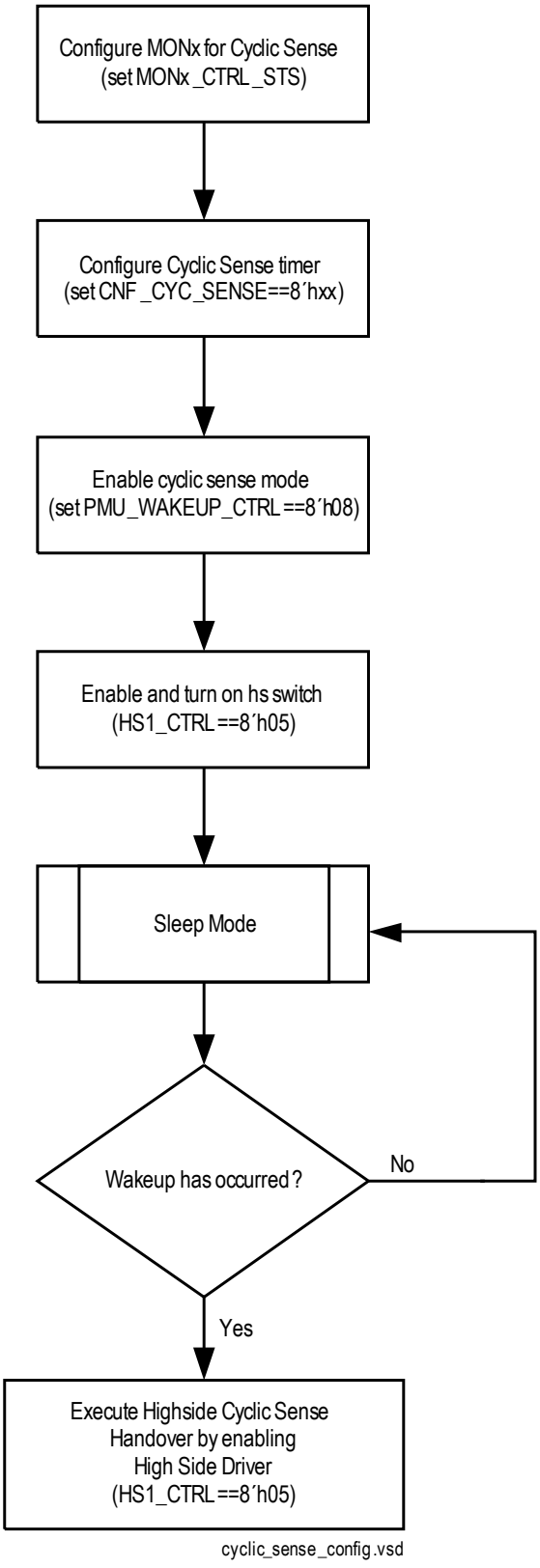

Figure 20 Configuration Flow of cyclic sense mode

6.6.2 Cyclic Wake Mode

Cyclic Wake mode provides a synchronous wake-up after a predefined time interval in Sleep Mode or Stop Mode. Once the time interval is elapsed the PMU enters the Startup Mode and proceeds to Active Mode where the software takes over the system control. The cyclic wake interval is set in the **PMU_SLEEP**-XSFR.

6.6.3 Register Definition

Table 22 Register Overview

Register Short Name	Register Long Name	Offset Address	Reset Value
Register Definition, Cyclic Mode Configuration Registers (CYCMU)			
PMU_SLEEP	PMU Sleep Behavior Register	020_H	$0037\ 0004_H$

The registers are addressed wordwise.

6.6.3.1 Cyclic Mode Configuration Registers (CYCMU)

Cyclic Sense Mode Configuration:

The off time (dead time) in Cyclic Sense Mode is calculated by following formula:

$$4^{(E1E0)} \cdot (M3M2M1M0+1) \cdot 2ms$$

where E1E0 represent the exponent, which can be configured by the register bits PMU_SLEEP.CYC_SENSE_E01 <1:0>. M3M2M1M0 represent the mantissa configurable by the register bits PMU_SLEEP.CYC_SENSE_M03. With this setting a time range between

- minimum 2 ms and
- maximum 2048 ms

can be configured. In addition to the off time (dead time) a sample delay for the sensing period can be configured. The sample delay applies after the corresponding supply (HS/VDDEXT) used in the cyclic mode is turned on to the sensing window, where the wake inputs (MONx/GPIOx) are sensed. The delay time can be configured in the PMU_SLEEP.CYC_SENSE_S_DEL register. The sensing window is fixed to typ. 10 us.

Cyclic Wake Mode Configuration:

The off time (dead time) in Cyclic Wake Mode is calculated by following formula:

.

$$4^{(E1E0)} \cdot (M3M2M1M0+1) \cdot 2ms$$

where E1E0 represent the exponent, which can be configured by the register bits PMU_SLEEP.CYC_WAKE_E01 <1:0>. M3M2M1M0 represent the mantissa configurable by the register bits PMU_SLEEP.CYC_WAKE_M03. With this setting a time range between

- minimum 2 ms and
- maximum 2048 ms

can be configured.

Note: all timings in the cyclic modes are derived from LP_CLK2. The values used in the register description are typical values. Their variation is depending on the variation of LP_CLK2.

PMU Sleep Behavior Register

PMU_SLEEP	Offset	Reset Value
PMU Sleep Behavior Register	**020_H**	**see Table 23**

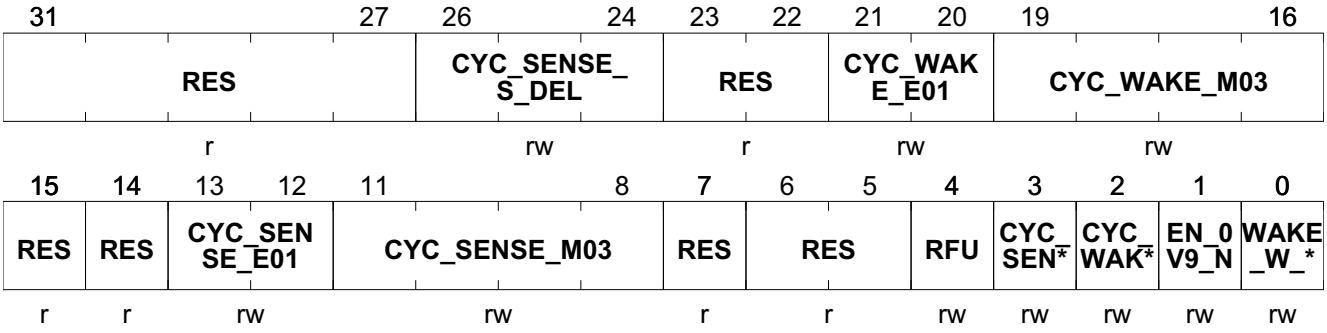

Field	Bits	Type	Description
RES	31:27	r	**Reserved** Always read as 0
CYC_SENSE_S_DEL	26:24	rw	**Sample Delay in Cyclic Sense Mode** Delay time after HS/VDDEXT is turned to beginning of sensing window for MONx/GPIOx. The sensing window is fixed to 10 µs. 000_B is 10 µs 001_B is 20 µs 010_B is 30 µs 011_B is 40 µs 100_B is 60 µs 101_B is 80 µs 110_B is 100 µs 111_B is 150 µs
RES	23:22	r	**Reserved** Always read as 0
CYC_WAKE_E01	21:20	rw	**Exponent** 00_B Exponent value is 0 01_B Exponent value is 1 10_B Exponent value is 2 11_B Exponent value is 3
CYC_WAKE_M03	19:16	rw	**Mantissa** Mantissa value is calculated as CYC_WAKE_M03 +1 0000_B Mantissa value is 1 1111_B Mantissa value is 16
RES	15	r	**Reserved** Always read as 0
RES	14	r	**Reserved** Always read as 0
CYC_SENSE_E01	13:12	rw	**Exponent** 00_B Exponent value is 0 01_B Exponent value is 1 10_B Exponent value is 2 11_B Exponent value is 3

Field	Bits	Type	Description
CYC_SENSE_M03	11:8	rw	**Mantissa** Mantissa value is calculated as CYC_SENSE_M03 +1 0000_B Mantissa value is 1 1111_B Mantissa value is 16
RES	7	r	**Reserved** Always read as 0
RES	6:5	r	**Reserved** Always read as 0
RFU	4	rw	**Reserved for Future Use** This bit is reserved for future use 0_B writing a zero has no effect 1_B writing a one has no effect
CYC_SENSE_EN	3	rw	**Enabling Cyclic Sense** This bit enables the cyclic sense feature for the power save modes. 0_B Cyclic Sense disabled 1_B Cyclic Sense enabled
CYC_WAKE_EN	2	rw	**Enabling Cyclic Wake** This bit enables the cyclic wake feature for the power save modes. 0_B Cyclic Wake disabled 1_B Cyclic Wake enabled
EN_0V9_N	1	rw	**Enables the reduction of the VDDC regulator output to 0.9 V during Stop-Mode** 0_B Output voltage reduction enabled 1_B Output voltage reduction disabled
WAKE_W_RST	0	rw	**Wake-up with reset execution** Enables the Stop-Exit with reset execution 0_B Stop-Exit without reset execution 1_B Stop-Exit with reset execution

Table 23 RESET of PMU_SLEEP

Register Reset Type	Reset Values	Reset Short Name	Reset Mode	Note
RESET_TYPE_2	00370004_H	RESET_TYPE_2		

6.7 Reset Management Unit (RMU)

The RMU controls the reset behavior of the entire device. The master reset of the device is the power-on reset of the PMU itself. This reset is generated by the Power Down Supply and it is released when the battery voltage (Vs) reaches the minimum supply voltage for Active Mode. Then the PMU starts the sequence to power-up the supply generation module which ends with the release of the MCU reset. If this status is reached then the embedded system will work in Active Mode. This scenario is signalled by the PMU_1V5DidPOR flag in the **PMU_RESET_STS**. The figure below shows the power-on reset behavior.

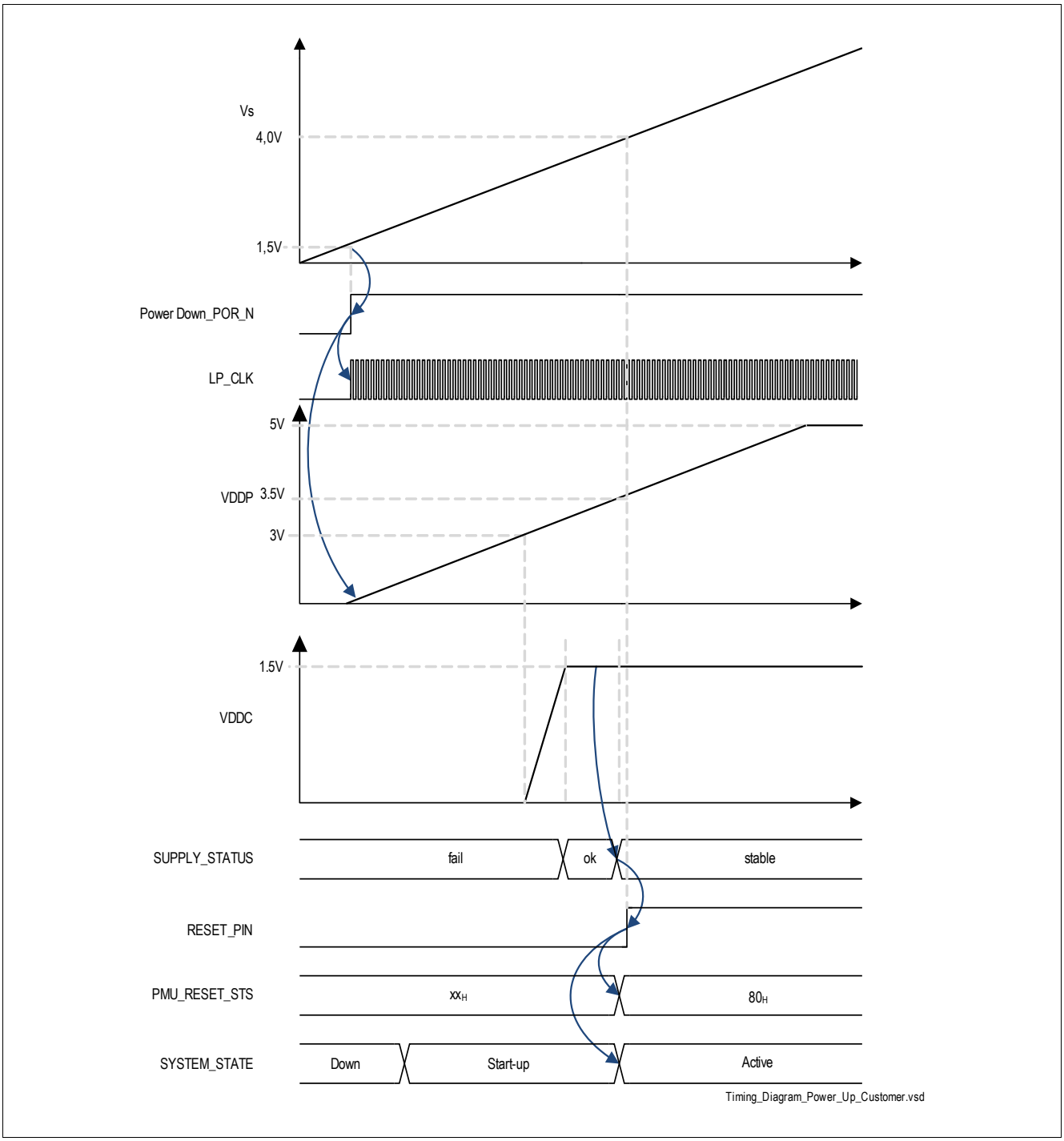

Figure 21 Power-On and Startup Behavior of Reset

In case of a Sleep Mode exit a similar sequence used for battery ramp-up starts. If this sequence ends successfully then the PMU also releases the reset of the MCU. From the MCU point of view there is no difference to the battery ramp-up. Only inside of the RMU the identification bit **PMU_SleepEx** is set instead of the power-on identification bit.

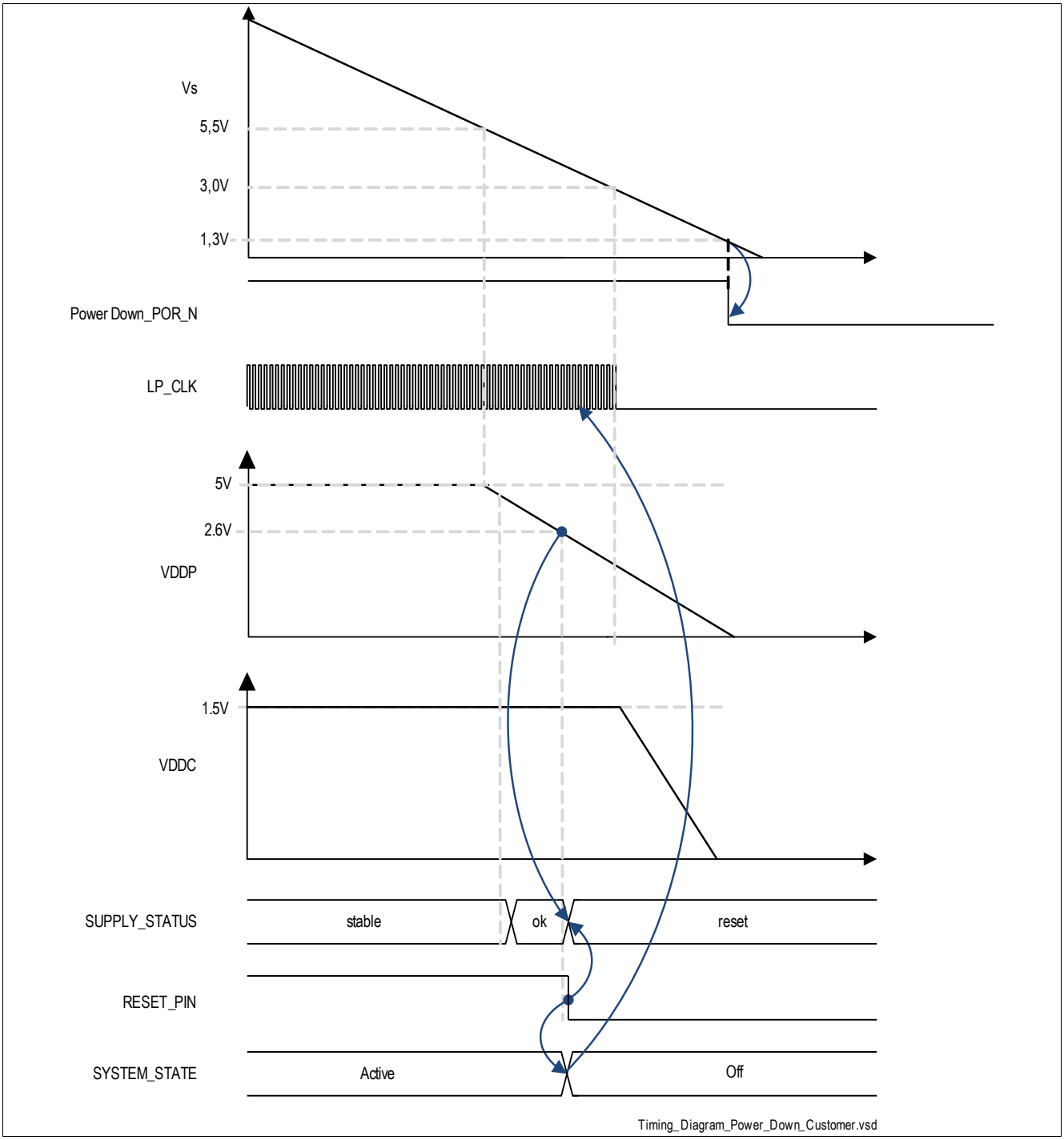

Figure 22 Power-Down and Power Loss Sequence

In the default configuration the wake-up from Stop Mode works without reset. To wake-up with reset the corresponding **SFR** bit WAKE_W_RST inside the **PMU_SLEEP** register must be configured. With this configuration the wake-up signal sets the dedicated identification bit PMU_WAKE which can be checked by the application software.

The third hardware related reset source is the pin-reset. The pad itself is supplied by the VDDP domain which is available in Active Mode and Stop Mode. Therefore the reset-pin can be used in Active Mode and Stop Mode only. Due to the bidirectional use of the pin itself the pin-reset request is gated during the execution of another reset request (e.g. soft-reset). For this purpose the pin-reset request must be stable for more than 500 ns (see **Figure 19**). In case of a pin-reset request during Stop Mode the PMU goes to Active Mode and sends the wake-up signal to the MCU. At this time the reset status register also gets an update by setting bit PMU_PIN, which signals the described reset source. All other reset sources can only have an impact on the system behavior in Active Mode.

The reset request caused by a system watchdog, which was not serviced is also processed as a hardware related reset although this reset request is implicitly controlled by user software. The system watchdog only works in Active Mode. In this case it expects a periodic trigger (window watchdog) from the user software. If the trigger is missing then the PMU gets the signal that the watchdog was not serviced which sets the identification bit PMU_ExtWDT from WDT1. After some clock cycles of the PMU internal oscillator LP_CLK the PMU resets the MCU. The prioritization of the described reset sources is done according to the architecture and the functionality of the embedded system itself.

The software-reset and the reset request caused by the MCU internal watchdog are controlled explicitly by user software and can be used only in Active Mode. From the system point of view both of these reset sources have the lowest priority. The software related reset is executed within two MCU clock cycles which is required by the CPU architecture. The system clock of the PMU works independently of the MCU clock. Due to these system conditions the PMU processes the software related resets asynchronously to its internal system clock. The software-reset is flagged by the PMU_SOFT bit. The flags is located in the above mentioned **PMU_RESET_STS** register.

Another reset source is the PSG module. In case the main voltage regulators (VDDP and VDDC) will fail, the system will execute a system reset and enter Sleep Mode afterwards. This case is flagged by setting the indication bit SYS_FAIL.

Reset types are combinations of the above described resets. The reset of an XSFR register is depending on the corresponding reset type. Other registers (all SFRs except NMI status flags) are always reset independent of the reset type. The figure below shows this combination of resets.

	SoC power-on	Sleep Mode	Pin-Reset	WDT_EXT	SOFT	error_sup=5	error_wdt=5
RESET_TYPE_0	X						
RESET_TYPE_1	X					X	X
RESET_TYPE_2	X		X	X	X	X	X
RESET_TYPE_3	X	X	X	X	X	X	X
RESET_TYPE_4	X	X	X	X		X	X

XSFR_reset_types_customer.vsd

Figure 23 Reset Types of SFRS provided by the RMU

Out of these above listed resets mainly five reset types are derived:

- **RESET_TYPE_0** contains:
  - PMU_1V5DidPOR: this reset is issued when the power down supply detects undervoltage
- **RESET_TYPE_1** is an OR of:
  - PMU_1V5DidPOR
  - PMU_FAIL: this reset is issued when the VDDC or VDDP supply have a failure
  - WDT_FAIL: this reset is issued when WDT1 is not triggered consecutively 5 times properly
- **RESET_TYPE_2** is an OR of:
  - PMU_1V5DidPOR
  - PMU_PIN: this reset is issued when the RESET-Pin is pulled down
  - PMU_ExtWDT: this reset is a WDT1 related reset
  - PMU_SOFT: this reset is a software related reset
  - PMU_Wake: this reset is a stop wake-up related reset
  - PMU_FAIL
  - WDT_FAIL
- **RESET_TYPE_3** is an OR of:
  - PMU_1V5DidPOR
  - PMU_PIN
  - PMU_ExtWDT
  - PMU_SOFT
  - PMU_Wake
  - PMU_SleepEx: this reset is a sleep wake-up related reset
  - PMU_FAIL
  - WDT_FAIL

Every register has its own reset type listed. In the Power Management Unit SFRs following reset types are used:

- RESET_TYPE_0
- RESET_TYPE_1
- RESET_TYPE_2
- RESET_TYPE_3

6.7.1 Register Definition

Table 24 Register Overview

Register Short Name	Register Long Name	Offset Address	Reset Value
Register Definition, Reset Management Unit Registers (RMU)			
PMU_RESET_STS	Reset Status Register	010_H	0000 0000_H
PMU_CNF_RST_TFB	Reset Blind Time Register	$06C_H$	0000 0003_H

The registers are addressed wordwise.

6.7.1.1 Reset Management Unit Registers (RMU)

The Reset Pin is a bidirectional signal. Every reset will be signaled on that pin for a few 100 ns. In order to avoid any reset deadlock situation there is a programmable reset blind time, where no hardware pin reset will be recognized and indicated in PMU_RESET_STS. The reset blind time envelopes the phase, where the reset pin acts as an active reset output. The functionality of the reset blind time is sketched below:

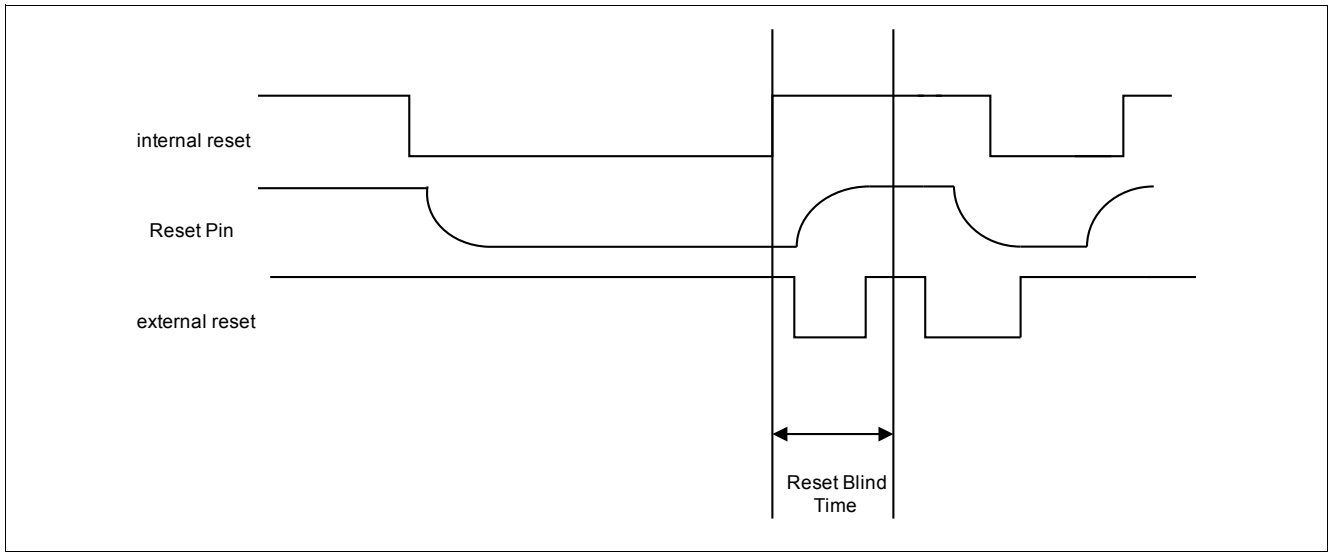

Figure 24 Reset blind time

Note:

A capacitor connected to the reset pin (pin 21) might cause a delay of the rising edge in a range that an "internal reset" is also indicated as pin reset (PMU_RESET_STS.PMU_PIN).

Reset Blind Time Register

PMU_CNF_RST_TFB	Offset	Reset Value
Reset Blind Time Register	$06C_H$	see Table 25

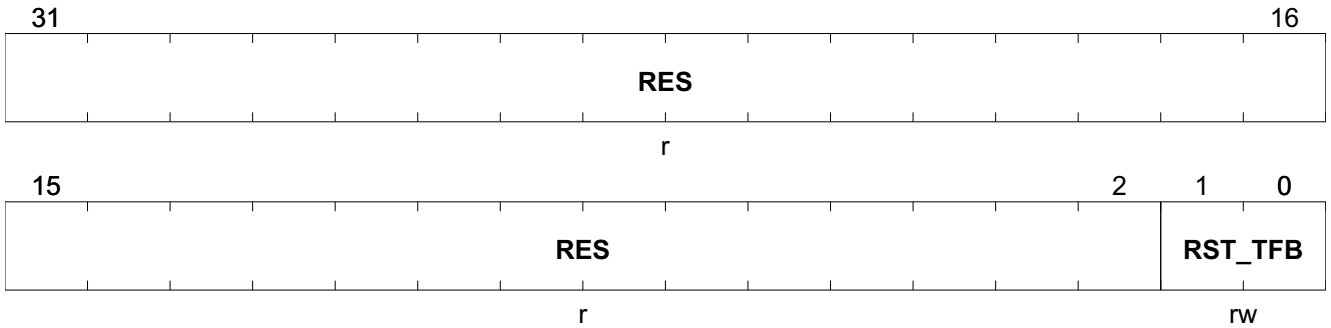

Field	Bits	Type	Description
RES	31:2	r	**Reserved** Always read as 0

Field	Bits	Type	Description
RST_TFB	1:0	rw	**Reset Pin Blind Time Selection Bits** These bits select the blind time for the reset input sampling. 00_B **RST_TFB_0** 0.5 µs typ. 01_B **RST_TFB_1** 1 µs typ. 10_B **RST_TFB_2** 5 µs typ. 11_B **RST_TFB_3** 31 µs typ.

Table 25 RESET of PMU_CNF_RST_TFB

Register Reset Type	Reset Values	Reset Short Name	Reset Mode	Note
RESET_TYPE_1	00000003_H	RESET_TYPE_1		

Reset Status Register

The PMU_RESET_STS register shows every executed reset request. The PMU writes the corresponding register bit of an executed reset. To clear the information of the PMU_RESET_STS register the user must overwrite the corresponding bit with a logic zero. The register is reset by RESET_TYPE_1.

The PMU_RESET_STS register shows every executed reset request. The PMU writes the corresponding register bit using settings of the asynchronously set input of the flip-flop. To clear the information of the PMU_RESET_STS register the user must overwrite the corresponding bit with a logic zero.

Note: The register PMU_RESET_STS is also cleared when **PMU_RESET_STS**.PMU_LPR) is cleared.

PMU_RESET_STS	Offset	Reset Value
Reset Status Register	010_H	see Table 26

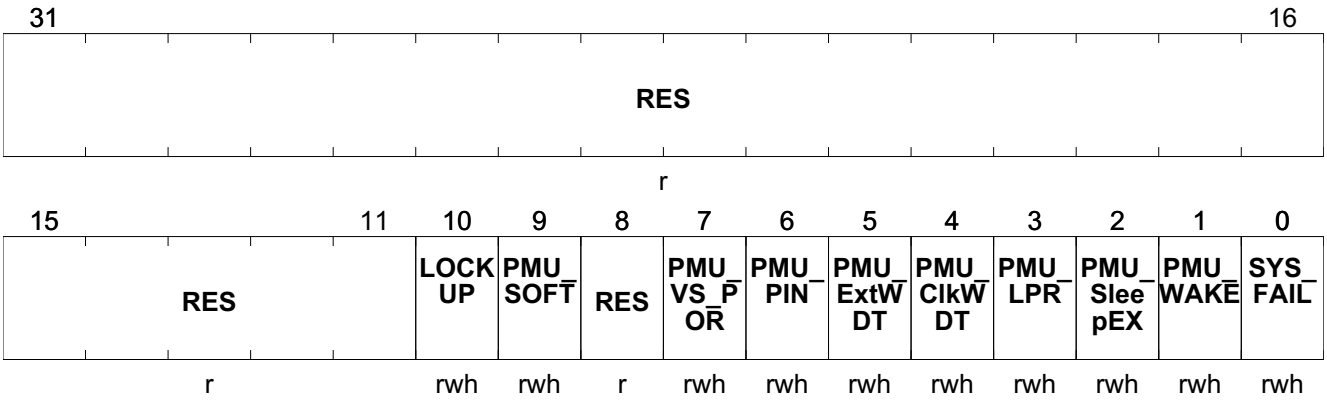

Field	Bits	Type	Description
RES	31:11	r	**Reserved** Always read as 0
LOCKUP	10	rwh	**Lockup-Reset Flag** 0_B No Lockup-Reset executed 1_B Lockup-Reset executed
PMU_SOFT	9	rwh	**Soft-Reset Flag** 0_B No Soft-Reset executed 1_B Soft-Reset executed
RES	8	r	**Reserved** Always read as 0
PMU_VS_POR	7	rwh	**Power-On Reset Flag** 0_B No Power-On reset executed 1_B Power-On reset executed
PMU_PIN	6	rwh	**PIN-Reset Flag** 0_B No PIN-Reset executed 1_B PIN-Reset executed
PMU_ExtWDT	5	rwh	**External Watchdog (WDT1) Reset Flag** 0_B No External Watchdog reset executed 1_B External Watchdog reset executed

Field	Bits	Type	Description
PMU_ClkWDT	4	rwh	**Clock Watchdog (CLKWDT) Reset Flag** 0_B No Clock Watchdog reset executed 1_B Clock Watchdog reset executed
PMU_LPR	3	rwh	**Low Priority Resets** *Note: Low Priority Resets are PMU_SOFT & LOCKUP* 0_B Low Priority-Reset executed 1_B Low Priority executed
PMU_SleepEX	2	rwh	**Flag which indicates a reset caused by Sleep-Exit** 0_B No reset caused by Sleep-Exit executed 1_B Reset caused by Sleep-Exit executed
PMU_WAKE	1	rwh	**Flag which indicates a reset caused by Stop-Exit** *Note: Stop-Exit with reset must be configured explicitly in the PMU_WAKE-UP_CTRL register*[1)] 0_B No reset caused by Stop-Exit executed 1_B Reset caused by Stop-Exit executed
SYS_FAIL	0	rwh	**Flag which indicates a reset caused by a System Fail reported in the corresponding Fail Register** 0_B No reset caused by System Fail executed 1_B Reset caused by System Fail executed

1) Otherwise this flag is not set. The flag is always set in case of pin reset in Stop Mode (in combination with the flag PMU_PIN).

Table 26 RESET of PMU_RESET_STS

Register Reset Type	Reset Values	Reset Short Name	Reset Mode	Note
RESET_TYPE_1	00000000_H	RESET_TYPE_1		

6.8 PMU Data Storage Area

The PMU provides the possibility for the system to store data in registers which will retain their values, when the device is set to sleep mode. In sum there are 12 x 8 Bit available.

6.8.1 Register Definition

Table 27 Register Overview

Register Short Name	Register Long Name	Offset Address	Reset Value
Register Definition, Data Storage Registers			
PMU_GPUDATA0to3	General Purpose User DATA0to3	$0C0_H$	$0000\ 0000_H$
PMU_GPUDATA4to7	General Purpose User DATA4to7	$0C4_H$	$0000\ 0000_H$
PMU_GPUDATA8to11	General Purpose User DATA8to11	$0C8_H$	$0000\ 0000_H$

The registers are addressed wordwise.

6.8.1.1 Data Storage Registers

General Purpose User DATA0to3 Storage Register

PMU_GPUDATA0to3	Offset	Reset Value
General Purpose User DATA0to3	$0C0_H$	see Table 28

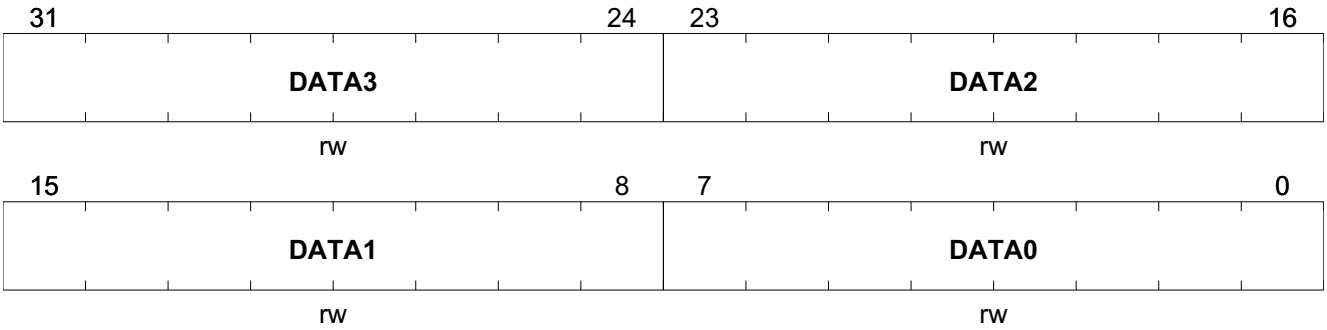

Field	Bits	Type	Description
DATA3	31:24	rw	**DATA3 Storage Byte** 4th byte of storage area
DATA2	23:16	rw	**DATA2 Storage Byte** 3rd byte of storage area

Field	Bits	Type	Description
DATA1	15:8	rw	**DATA1 Storage Byte** 2nd byte of storage area
DATA0	7:0	rw	**DATA0 Storage Byte** 1st byte of storage area

Table 28 RESET of PMU_GPUDATA0to3

Register Reset Type	Reset Values	Reset Short Name	Reset Mode	Note
RESET_TYPE_1	00000000_H	RESET_TYPE_1		

General Purpose User DATA4to7 Storage Register

PMU_GPUDATA4to7	Offset	Reset Value
General Purpose User DATA4to7	$0C4_H$	see Table 29

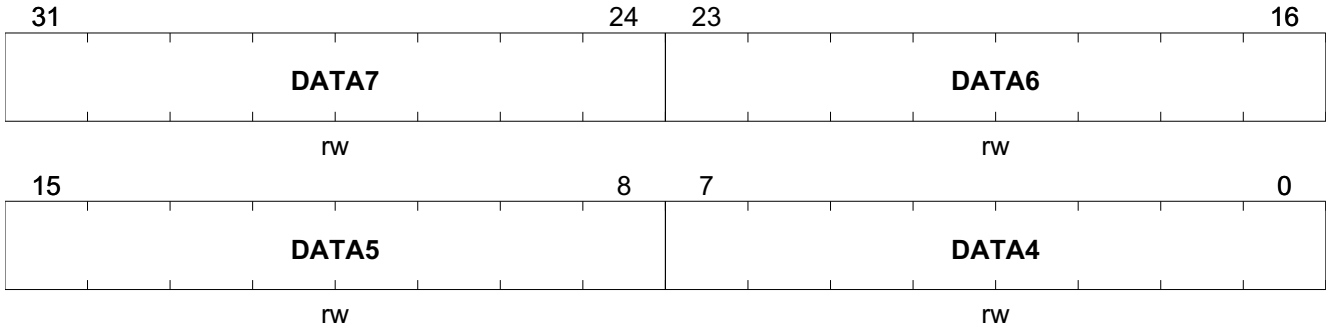

Field	Bits	Type	Description
DATA7	31:24	rw	**DATA7 Storage Byte** 8th byte of storage area
DATA6	23:16	rw	**DATA6 Storage Byte** 7th byte of storage area
DATA5	15:8	rw	**DATA5 Storage Byte** 6th byte of storage area
DATA4	7:0	rw	**DATA4 Storage Byte** 5th byte of storage area

Table 29 RESET of PMU_GPUDATA4to7

Register Reset Type	Reset Values	Reset Short Name	Reset Mode	Note
RESET_TYPE_1	00000000_H	RESET_TYPE_1		

General Purpose User DATA8to11 Storage Register

This register is shared with **PMU_WAKE_CNF_GPIO0**.

The functionality can be switched with **PMU_CPREG_CNF.SEL_GPIO**.

PMU_GPUDATA8to11	Offset	Reset Value
General Purpose User DATA8to11	$0C8_H$	see Table 30

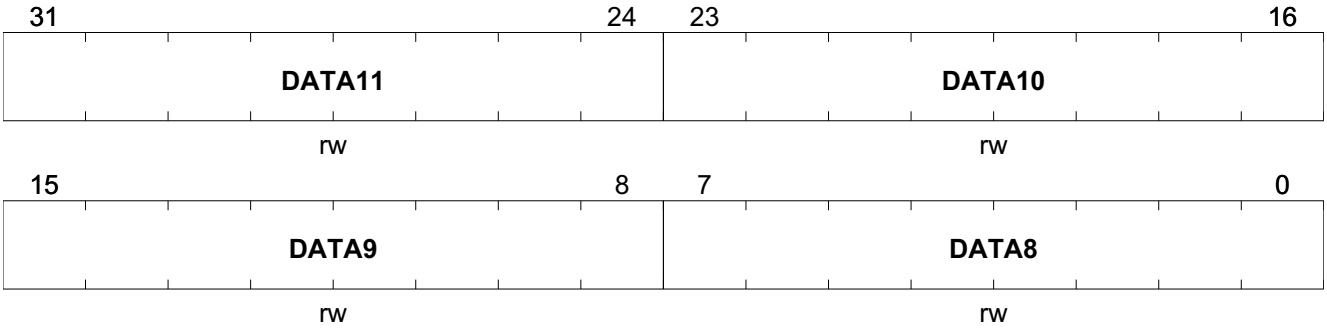

Field	Bits	Type	Description
DATA11	31:24	rw	**DATA11 Storage Byte** 12th byte of storage area
DATA10	23:16	rw	**DATA10 Storage Byte** 11th byte of storage area
DATA9	15:8	rw	**DATA9 Storage Byte** 10th byte of storage area
DATA8	7:0	rw	**DATA8 Storage Byte** 9th byte of storage area

Table 30 RESET of PMU_GPUDATA8to11

Register Reset Type	Reset Values	Reset Short Name	Reset Mode	Note
RESET_TYPE_1	00000000_H	RESET_TYPE_1		Reset_Type_1 only if Sel GPIO=1.

7 System Control Unit - Digital Modules (SCU-DM)

7.1 Features

- Flexible clock configuration features
- Reset management of all system resets
- System modes control for all power modes (active, power down, sleep)
- Interrupt enabling for many system peripherals
- General purpose input output control
- Debug mode control of system peripherals

7.2 Introduction

The System Control Unit (SCU) supports all central control tasks in the TLE984xQX. The SCU is made up of the following sub-modules:

- Clock System and Control (CGU) (see **Chapter 7.3**)
- Reset Control (RCU) (see **Chapter 7.4**)
- Power Management (PCU) (see **Chapter 7.5**)
- Interrupt Management (ICU) (see **Chapter 7.6**)
- General Port Control (see **Chapter 7.7**)
- Flexible Peripheral Management (see **Chapter 7.9**)
- Module Suspend Control (see **Chapter 7.10**)
- Error Detection and Correction in Data Memory (see **Chapter 7.13**)
- Miscellaneous Control (see **Chapter 7.14**)
- Register Mapping (see **Chapter 7.2.2**)

7.2.1 Block Diagram

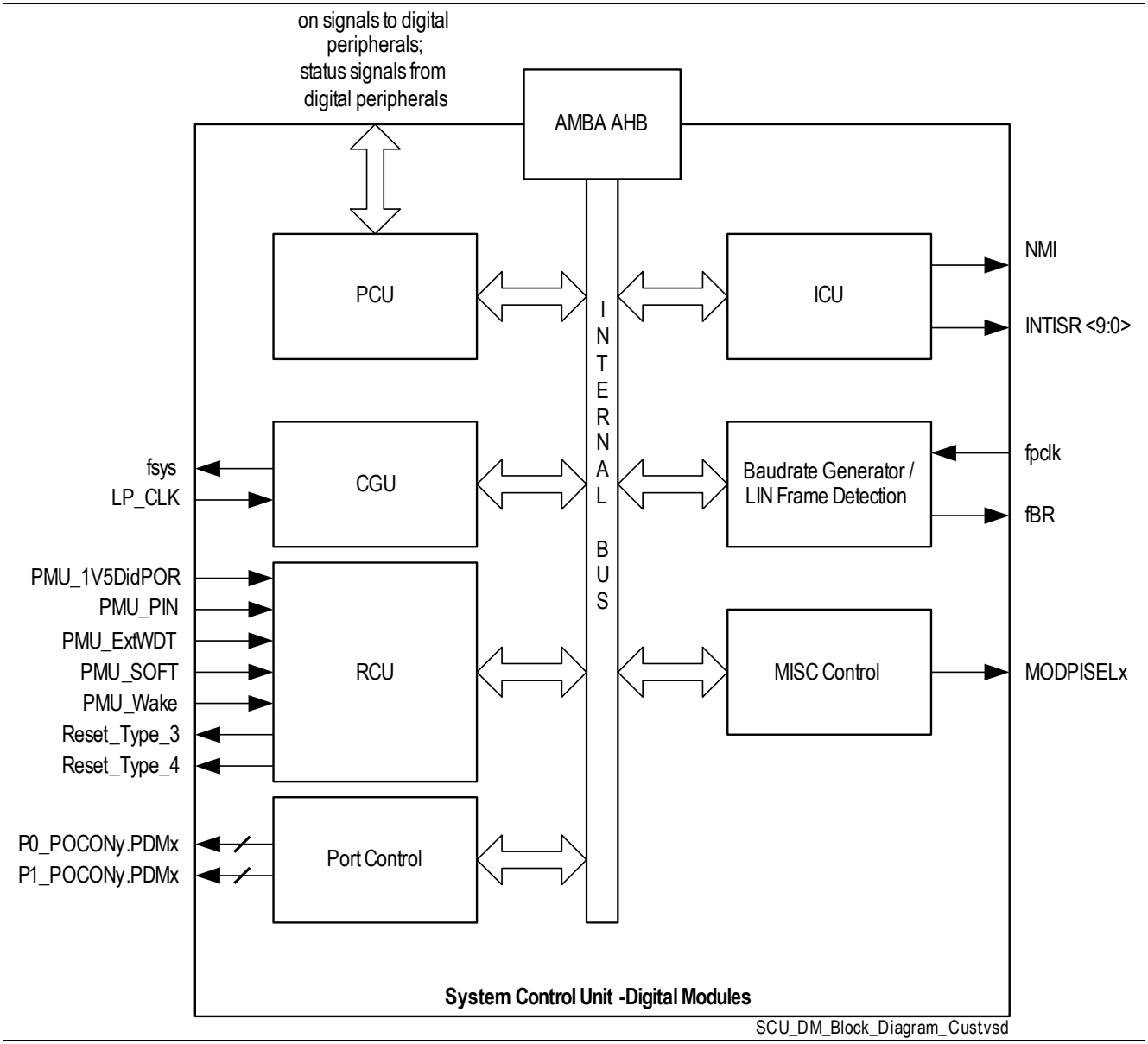

Figure 25 System Control Unit - Digital Modules Block Diagram

IO description of SCU_DM:

- CGU:
  - f_{sys}; system clock
  - LP_CLK; low-power backup clock
- RCU:
  - 1V5DidPOR; Undervoltage reset of power down supply
  - PMU_PIN; Reset generated by reset pin
  - PMU_ExtWDT; WDT1 reset
  - PMU_SOFT; Software reset
  - PMU_Wake; Stop Mode exit with reset
  - Reset_Type_3; Peripheral reset (contains all resets)

  - Reset_Type_4; Peripheral reset (without SOFT)
- Baudrate generator:
  - f_{BR}; Baudrate clock for UART
- Port Control:
  - P0_POCONy.PDMx; driver strength control
  - P1_POCONy.PDMx; driver strength control
- MISC:
  - MODPISELx; Mode selection registers for UART (source selection) and Timer (trigger or count selection)

7.2.2 SCU Register Overview

This chapter contains an overview of all SCU Registers.

7.2.2.1 Register Map

Table 32 lists the addresses of the SCU SFRs.

Table 31 shows the SCU module base address.

Table 31 Register Address Space

Module	Base Address	End Address	Note
SCU	5000 5000_H	5000 $5FFF_H$	

Table 32 Register Overview SCU Module

Register Short Name	Register Long Name	Offset Address	Reset Value
SCU_NMISRCLR	NMI Status Clear Register	000_H	see Table 84
SCU_IRCON0	Interrupt Request Register 0	004_H	see Table 69
SCU_IRCON1	Interrupt Request Register 1	008_H	see Table 71
SCU_IRCON2	Interrupt Request Register 2	$00C_H$	see Table 73
SCU_IRCON3	Interrupt Request Register 3	010_H	see Table 75
SCU_IRCON4	Interrupt Request Register 4	014_H	see Table 77
SCU_NMISR	NMI Status Register	018_H	see Table 83
SCU_IEN0	Interrupt Enable Register 0	$01C_H$	see Table 63
SCU_VTOR	Vector Table Reallocation Register	020_H	see Table 64
SCU_NMICON	NMI Control Register	024_H	see Table 65
SCU_EXICON0	External Interrupt Control Register 0	028_H	see Table 66
SCU_EXICON1	External Interrupt Control Register 1	$02C_H$	see Table 67
SCU_MODIEN1	Peripheral Interrupt Enable Register 1	030_H	see Table 85
SCU_MODIEN2	Peripheral Interrupt Enable Register 2	034_H	see Table 86
SCU_MODIEN3	Peripheral Interrupt Enable Register 3	038_H	see Table 87
SCU_MODIEN4	Peripheral Interrupt Enable Register 4	$03C_H$	see Table 88
SCU_PMCON0	Power Mode Control Register 0	040_H	see Table 58
SCU_PLL_CON	PLL Control Register	044_H	see Table 43
SCU_CMCON1	Clock Control Register 1	048_H	see Table 44
SCU_CMCON2	Clock Control Register 2	$04C_H$	see Table 45
Reserved	Reserved	050_H	Reserved
SCU_APCLK_CTRL	Analog Peripheral Clock Control Register	054_H	see Table 47
SCU_APCLK	Analog Peripheral Clock Register	058_H	see Table 48
SCU_APCLK_STS	Analog Peripheral Clock Status Register	$05C_H$	see Table 52
SCU_PMCON	Peripheral Management Control Register	060_H	see Table 100
SCU_APCLK_SCLR	Analog Peripheral Clock Status Clear Register	064_H	see Table 53
SCU_RSTCON	Reset Control Register	068_H	see Table 56
SCU_ADC1_CLK	ADC1 Peripheral Clock Register	$06C_H$	see Table 51

Table 32 Register Overview SCU Module (cont'd)

Register Short Name	Register Long Name	Offset Address	Reset Value
SCU_SYSCON0	System Control Register 0	070_H	see Table 46
SCU_SYS_STRTUP_STS	System Startup Status Register	074_H	see Table 117
SCU_WAKECON	Wakeup Interrupt Control Register	078_H	see Table 68
SCU_IRCON5	Interrupt Request Register 5	$07C_H$	see Table 79
Reserved	Reserved	080_H	Reserved
Reserved	Reserved	084_H	Reserved
SCU_BCON1, dedicated for UART1	Baud Rate Control Register 1	088_H	see Table 102
SCU_BGL1, dedicated for UART1	Baud Rate Timer/Reload Register, Low Byte 1	$08C_H$	see Table 104
SCU_BG1, dedicated for UART1	Baud Rate Timer/Reload Register	090_H	see Table 106
SCU_LINST, dedicated for UART1	LIN Status Register	094_H	see Table 108
SCU_BCON2, dedicated for UART2	Baud Rate Control Register 2	098_H	see Table 103
SCU_BGL2, dedicated for UART2	Baud Rate Timer/Reload Register, Low Byte 2	$09C_H$	see Table 105
SCU_BG2, dedicated for UART2	Baud Rate Timer/Reload Register	$0A0_H$	see Table 107
SCU_LINSCLR, dedicated for UART1	LIN Status Clear Register	$0A4_H$	see Table 109
SCU_ID	Identity Register	$0A8_H$	see Table 120
SCU_PASSWD	Password Register	$0AC_H$	see Table 115
SCU_OSC_CON	OSC Control Register	$0B0_H$	see Table 42
SCU_COCON	Clock Output Control Register	$0B4_H$	see Table 54
SCU_MODPISEL	Peripheral Input Select Register	$0B8_H$	see Table 91
SCU_MODPISEL1	Peripheral Input Select Register 1	$0BC_H$	see Table 92
SCU_MODPISEL2	Peripheral Input Select Register 2	$0C0_H$	see Table 93
SCU_MODPISEL3	Peripheral Input Select Register 3	$0C4_H$	see Table 94
SCU_MODSUSP	Module Suspend Control Register	$0C8_H$	see Table 101
SCU_EMOP	Emergency and Program Operation Status Register	$0CC_H$	see Table 122
SCU_GPT12PISEL	GPT12 Peripheral Input Select Register	$0D0_H$	see Table 98
SCU_EDCCON	Error Detection and Correction Control Register	$0D4_H$	see Table 110
SCU_EDCSTAT	Error Detection and Correction Status Register	$0D8_H$	see Table 111
SCU_MEMSTAT	Memory Status Register	$0DC_H$	see Table 121
SCU_NVM_PROT_STS	NVM Protection Status Register	$0E0_H$	see Table 118
SCU_MEM_ACC_STS	Memory Access Status Register	$0E4_H$	see Table 119

Table 32 Register Overview SCU Module (cont'd)

Register Short Name	Register Long Name	Offset Address	Reset Value
SCU_P0_POCON0	Port Output Control Register	$0E8_H$	see Table 95
Reserved	Reserved	$0EC_H$	Reserved
Reserved	Reserved	$0F0_H$	Reserved
SCU_TCCR	Temperature Compensation Control Register	$0F4_H$	see Table 97
SCU_P1_POCON0	Port Output Control Register	$0F8_H$	see Table 96
SCU_MODPISEL4	Peripheral Input Select Register 4	$0FC_H$	see Table 99
Reserved	Reserved	100_H	Reserved
SCU_EDCSCLR	Error Detection and Correction Status Clear Register	$10C_H$	see Table 113
SCU_GPT12IEN	General Purpose Timer 12 Interrupt Enable Register	$15C_H$	see Table 90
SCU_GPT12IRC	Timer and Counter Control/Status Register	160_H	see Table 81
SCU_IRCON0CLR	Interrupt Request 0 Clear Register	178_H	see Table 70
SCU_IRCON1CLR	Interrupt Request 1 Clear Register	$17C_H$	see Table 72
SCU_GPT12ICLR	Timer and Counter Control/Status Clear Register	180_H	see Table 82
SCU_MONIEN	Monitoring Input Interrupt Enable Register	$18C_H$	see Table 89
SCU_IRCON2CLR	Interrupt Request 2 Clear Register	190_H	see Table 74
SCU_IRCON3CLR	Interrupt Request 3 Clear Register	194_H	see Table 76
SCU_IRCON4CLR	Interrupt Request 4 Clear Register	198_H	see Table 78
SCU_IRCON5CLR	Interrupt Request 5 Clear Register	$19C_H$	see Table 80

The registers are addressed wordwise.

7.3 Clock Generation Unit

The Clock Generation Unit (CGU) provides a flexible clock generation for TLE984xQX. During user program execution the frequency can be programmed for an optimal ratio between performance and power consumption. Therefore the power consumption can be adapted to the actual application state.

The CGU in the TLE984xQX consists of one oscillator circuit (OSC_HP), a Phase-Locked Loop (PLL) module including an internal oscillator (OSC_PLL) and a Clock Control Unit (CCU). The CGU can convert a low-frequency input/external clock signal to a high-frequency internal clock.

The system clock f_{SYS} is generated out of the following selectable clocks:

- PLL clock output f_{PLL}
- Direct clock from oscillator OSC_HP f_{OSC}
- Direct output of internal Oscillator f_{INTOSC}
- Low precision clock f_{LP_CLK} (HW-enabled for startup after reset and during power-down wake-up sequence)

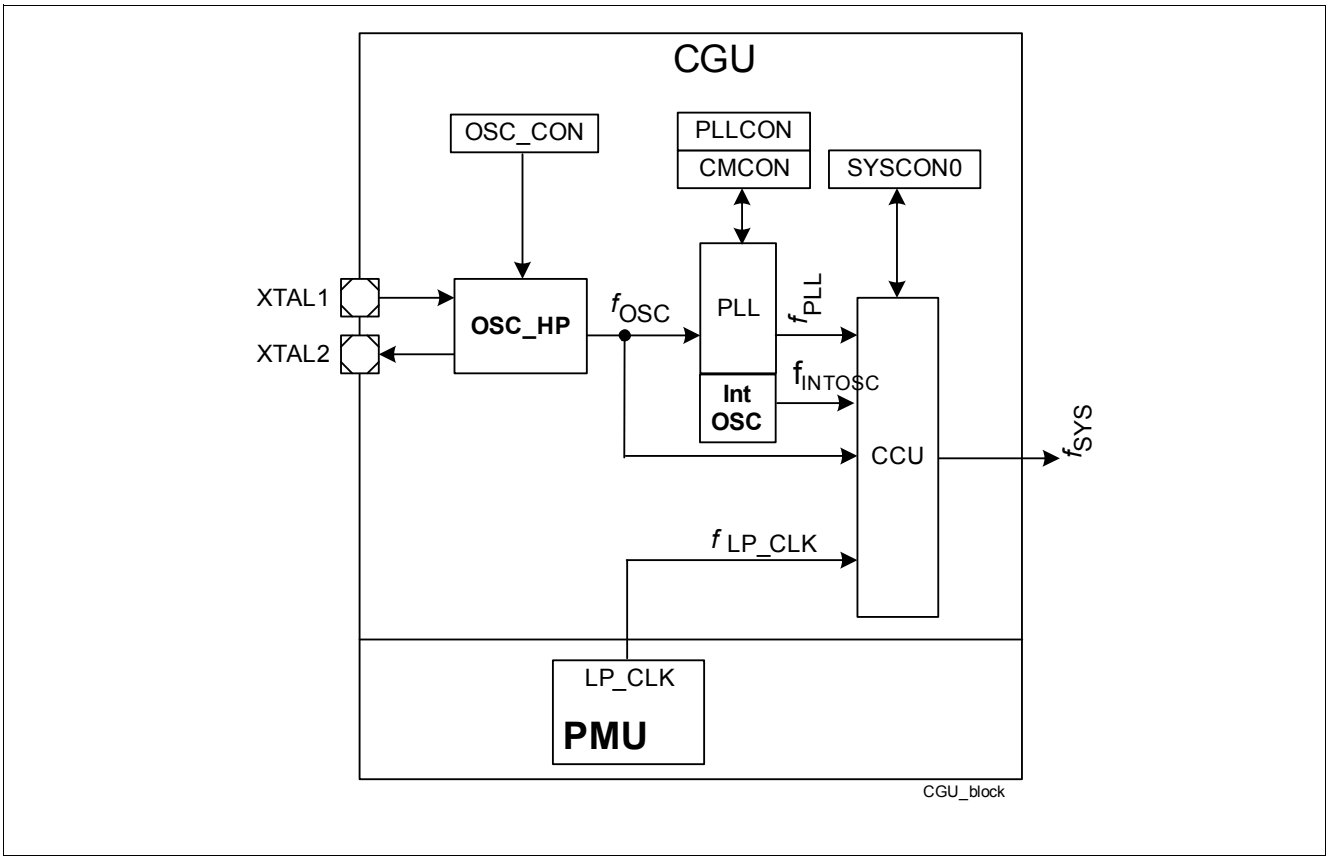

Figure 26 Clock Generation Unit Block Diagram

The following sections describe the different parts of the CGU.

7.3.1 Low Precision Clock

The clock source LP_CLK is a low-precision RC oscillator (LP-OSC, see f_{LP_CLK}) that is enabled by hardware as an independent clock source for the TLE984xQX startup after reset and during the power-down wake-up sequence. There is no user configuration possible on f_{LP_CLK}.

7.3.2 High Precision Oscillator Circuit (OSC_HP)

The high precision oscillator circuit, designed to work with both an external crystal oscillator or an external stable clock source, consists of an inverting amplifier with XTAL1 as input, and XTAL2 as output.

Figure 27 shows the recommended external circuitries for both operating modes, External Crystal Mode and External Input Clock Mode.

7.3.2.1 External Input Clock Mode

When supplying the clock signal directly, not using an external crystal and bypassing the oscillator, the input frequency needs to be within the range of 4 MHz to 24 MHz if the PLL VCO part is used.

When using an external clock signal it must be connected to XTAL1. XTAL2 is left open (unconnected).

7.3.2.2 External Crystal Mode

When using an external crystal, its frequency can be within the range of 4 MHz to 6 MHz. An external oscillator load circuitry must be used, connected to both pins, XTAL1 and XTAL2. It consists normally of the two load capacitances C1 and C2, for some crystals a series damping resistor might be necessary. The exact values and related operating range are dependent on the crystal and have to be determined and optimized together with the crystal vendor using the negative resistance method. As starting point for the evaluation, the following load cap values may be used:

Table 33 External CAP Capacitors

Fundamental Mode Crystal Frequency (approx., MHz)	Load Caps C_1, C_2 (pF)
4	33
5	22
6	18

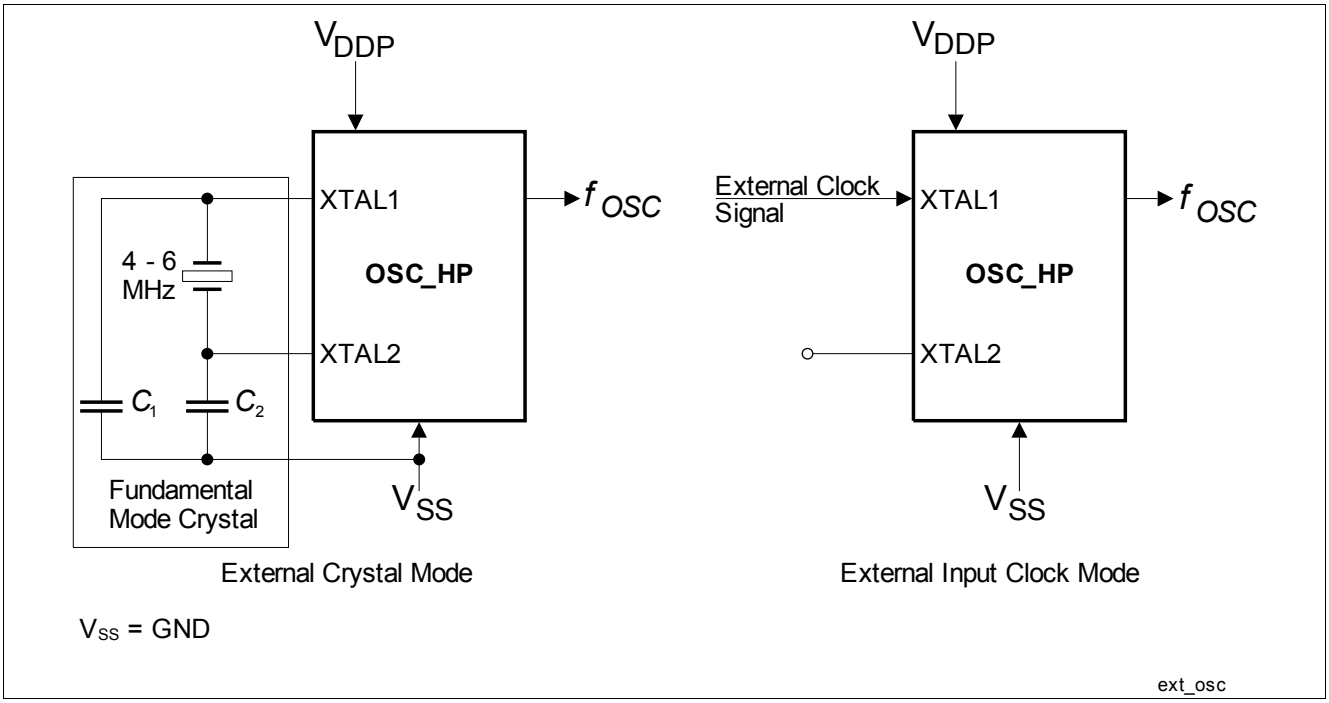

Figure 27 TLE984xQX External Circuitry for the OSC_HP

7.3.3 Phase-Locked Loop (PLL) Module

This section describes the TLE984xQX PLL module.

The clock f_{PLL} is generated in one of the following PLL configured modes:

- Prescaler Mode, also called VCO Bypass Mode
- Normal Mode
- Freerunning Mode

7.3.3.1 Features

Following is an overview of the PLL features/functions:

- Programmable clock generation PLL
- Loop filter
- Wide range of input frequencies (divided by configurable P divider)
- Wide VCO frequency tunning range
- VCO lock detection
- Oscillator run detection
- 4-bit VCO output frequency feedback divider **N**
- 2-bit VCO output frequency divider **K2** and 1-bit output divider **K1**
- Oscillator Watchdog
- Prescaler Mode
- Freerunning Mode
- Normal Mode
- Sleep Mode automatically activated during device power-save mode
- Glitchless switching between both K-Dividers
- Glitchless switching between Normal Mode and Prescaler Mode
- Internal Oscillator for oscillator watchdog
- Internal Oscillator as clock source

7.3.3.2 PLL Functional Description

The following figure shows the PLL block structure.

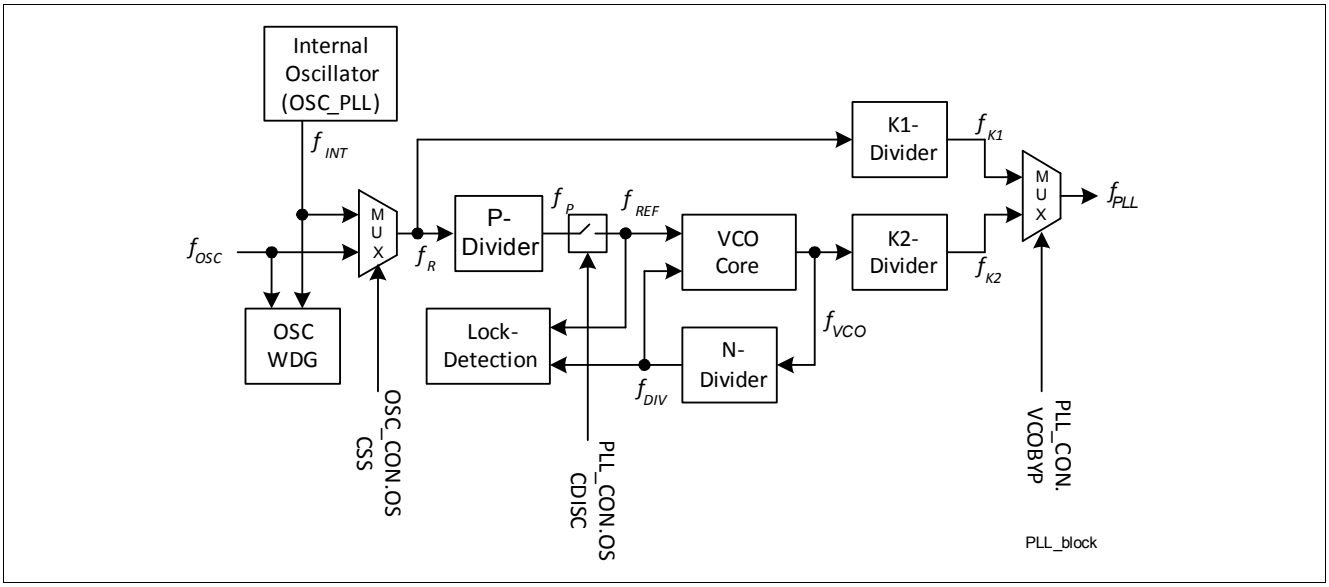

Figure 28 PLL Block Diagram

The reference frequency f_R can be selected to be taken either from the internal oscillator f_{INT} or from an external clock source f_{OSC}.

The PLL uses up to three dividers to set the system frequency f_{sys} in a flexible way. Each of the three dividers can be bypassed corresponding to the PLL operating mode (based on f_{PLL}):

- Bypassing P, N and K2 dividers; this defines the Prescaler Mode
- Bypassing K1 divider; this defines the Normal Mode
- Bypassing K1 divider and ignoring the P divider; this defines the Freerunning Mode

Table 3 shows the selectable clock source options.

Table 34 Clock Option Selection

VCOBYP	OSCDISC	Mode Selected
0	0	Normal Mode
1	x	Prescaler Mode
0	1	Freerunning Mode

Normal Mode

In Normal Mode the reference frequency f_R is divided down by a factor P, multiplied by a factor N and then divided down by a factor K2.

The output frequency is given by:

$$f_{PLL} = \frac{N}{P \bullet K2} \bullet f_R \quad (1)$$

The Normal Mode is selected by the following settings

- PLL_CON.VCOBYP = 0

The Normal Mode is active when

- PLL_CON.VCOBYP = 0
- PLL_CON.OSCDISC = 0
- PLL_CON.LOCK = 1

If f_{PLL} is selected as the clock source for system frequency f_{SYS}, the user should enable PLL in normal mode as default.

Note: ***When configuring the PLL frequency f_{PLL} by the P and N dividers the user shall take care that the limits for f_{REF}, f_{VCO} and f_{sys} are not exceeded.***

Prescaler Mode (VCO Bypass Mode)

In Prescaler Mode the reference frequency f_R is only divided down by a factor K1.

The output frequency is given by

$$f_{PLL} = \frac{f_R}{K1} \quad (2)$$

The Prescaler Mode is selected by the following settings

- PLL_CON.VCOBYP = 1
- PLL_CON.OSCDISC = X

The Prescaler Mode is active when

- PLL_CON.VCOBYP = 1
- PLL_CON.OSCDISC = X
- OSC_CON.OSC2L = 0 if f_{OSC} is provided as $f_{R\ (OSC_CON.OSCSS = 01B)}$

Freerunning Mode

In Freerunning Mode the base frequency output of the Voltage Controlled Oscillator (VCO) $f_{VCObase}$ is only divided down by a factor K2.

The output frequency is given by

$$f_{PLL} = \frac{f_{VCObase}}{K2} \quad (3)$$

The Freerunning Mode is enabled by the following settings/conditions

- PLL_CON.VCOBYP = 0 and PLL_CON.LOCK = 0

or

- PLL_CON.VCOBYP = 1 and OSC_CON.OSCSS = 1 and OSC_CON.OSC2L = 1

or

- PLL_CON.VCOBYP = 0 and PLL_CON.OSCDISC = 1
- PLL_CON.VCOBYP = 0
- PLL_CON.OSCDISC = 1
- PLL_CON.LOCK = 0

General Configuration Overview

The divider values and all necessary other values can be configured via the PLL configuration registers.

In TLE984xQX the P factor can be programmed to the values 4, 5 or 6. **Table 35** shows all possible values for the P factor and gives the valid input frequency range f_R for the P divider dependent configuration and the resulting f_P frequency values which are directly linked to f_{REF}:

Table 35 P-Divider Factor

P	f_P for f_R =		
	4 MHz	**5 MHz**	**6 MHz**
4	1	1.25	not allowed
5	0.8	1	1.2
6	not allowed	$0.8\overline{3}$	1

Note: Of course the whole range in between two f_R columns in the above table is allowed if parameter f_{VCO} is kept within the specified limits. The min. and max. limits of f_P result out of the parameter specification of f_{REF} and its variation as f_P is directly linked to f_{REF}.

The P-divider output frequency f_P is fed to the Voltage Controlled Oscillator (VCO).The VCO is a part of PLL with a feedback path. A divider in the feedback path (N divider) divides the VCO frequency. The f_{VCO} range is defined by:

Table 36 VCO Range

min. VCO tunning range frequency	max. VCO tunning range frequency	VCO freerunning frequency	Unit
see f_{VCO_min}	see f_{VCO_max}	see $f_{VCOfree}$ [1]	MHz

1) $f_{VCObase}$ is the free running operation frequency of the PLLVCO, when no input reference clock is available.

The following table shows the possible N loop division rates and gives the valid output frequency range for f_{REF} depending on N and the VCO frequency range. All not allowed combinations are related to the fact that using them the limits of parameter f_{REF} are violated:

Table 37 N Loop Division Rates

N	f_{DIV} for f_{VCO} =				
	75	**96**	**112**	**136**	**160**
1-47	not accessible				
48	not allowed	not allowed	not allowed	not allowed	not allowed
50	not allowed	not allowed	not allowed	not allowed	not allowed
51	not allowed	not allowed	not allowed	not allowed	not allowed
52	not allowed	not allowed	not allowed	not allowed	not allowed
54	not allowed	not allowed	not allowed	not allowed	not allowed
60	1.25	not allowed	not allowed	not allowed	not allowed
67	1.12	not allowed	not allowed	not allowed	not allowed
72	1.04	not allowed	not allowed	not allowed	not allowed
75	1.00	not allowed	not allowed	not allowed	not allowed
78	0.96	1.23	not allowed	not allowed	not allowed

Table 37 N Loop Division Rates (cont'd)

N	f_{DIV} for f_{VCO} =				
	75	**96**	**112**	**136**	**160**
80	0.94	1.2	not allowed	not allowed	not allowed
88	0.85	$1.0\overline{9}$	not allowed	not allowed	not allowed
90	0.83	1.07	1.24	not allowed	not allowed
94	0.80	1.02	1.19	not allowed	not allowed
100	not allowed	0.96	1.12	not allowed	not allowed
160	not allowed	not allowed	not allowed	0.85	1.00
others	not accessible				

Note: The not allowed settings are related to the fact that the maximum system frequency f_{sys_max} is exceeded. The whole range in between two f_{VCO} columns in the above table is allowed if the specification for the parameter f_{REF} is maintained as f_{DIV} is compared to f_{REF}.

The N-divider output frequency f_{DIV} is then compared with f_{REF} in the phase detector logic, within the VCO logic. The phase detector determines the difference between the two clock signals and accordingly controls the output frequency of the VCO, f_{VCO}.

Note: Due to this operation, the VCO clock of the PLL has a frequency which is a multiple of f_{DIV}. The factor for this is controlled through the value applied to the N-divider in the feedback path. For this reason this factor is often called a multiplier, although it actually controls division.

The output frequency of the VCO, f_{VCO}, is divided by K2 to provide the final desired output frequency f_{PLL}. **Table 38** shows the output frequency range depending on the K2 divisor and the VCO frequency range:

Table 38 K2 Divisor Table

K2	f_{PLL} for f_{VCO} =					Typ. Duty Cycle [%]
	75	**96**	**112**	**136**	**160**	
2	37.5	not allowed	not allowed	not allowed	not allowed	50
3	25.0	32.0	37.3	not allowed	not allowed	40
4	18.8	24.0	28.0	34.0	40.0	50
5	15.0	19.2	22.4	27.2	32.0	44
others	not accessible					

Notes

1. *The whole range in between two f_{vco} columns in the above table is only allowed if the maximum specified system frequency f_{sys} is not exceeded.*

For the K1-divider the same table is valid as for the K2-divider. The only difference is that not f_{VCO} is used as reference, f_R is used instead.

Table 39 K1 Divisor Table

K1	f_{PLL} for f_R =			Duty Cycle [%]
	4	5	6	
1	4.0	5.0	6.0	40 - 60
2	2.0	2.5	3.0	50
others	not accessible			

For different source oscillator, the selection of f_{PLL} = 16 MHz, 20 MHz, 25 MHz, 37.5 MHz and 40 MHz is shown in **Table 40**.

Table 40 System Frequency

f_{PLL} Selected	Oscillator	f_{OSC}	N	P	f_{REF}	K	Actual f_{sys}	Actual f_{VCO}
40 MHz	On-chip	5 MHz	80	5	1	2	40 MHz	80 MHz
	External	4 MHz	80	4	1	2	40 MHz	80 MHz
		5 MHz	80	5	1	2	40 MHz	80 MHz
		6 MHz	80	6	1	2	40 MHz	80 MHz
37.5 MHz	On-chip	5 MHz	90	4	1,25	3	37.5 MHz	112.5 MHz
	External	5 MHz	90	4	1,25	3	37.5 MHz	112.5 MHz
25 MHz	On-chip	5 MHz	100	5	1	4	25 MHz	100 MHz
	External	4 MHz	100	4	1	4	25 MHz	100 MHz
		5 MHz	100	5	1	4	25 MHz	100 MHz
		6 MHz	100	6	1	4	25 MHz	100 MHz
20 MHz	On-chip	5 MHz	80	5	1	4	20 MHz	80 MHz
	External	4 MHz	80	4	1	4	20 MHz	80 MHz
		5 MHz	80	5	1	4	20 MHz	80 MHz
		6 MHz	80	6	1	4	20 MHz	80 MHz
16 MHz	On-chip	5 MHz	80	5	1	5	16 MHz	80 MHz
	External	4 MHz	80	4	1	5	16 MHz	80 MHz
		5 MHz	80	5	1	5	16 MHz	80 MHz
		6 MHz	80	6	1	5	16 MHz	80 MHz

Note: ***For the TLE984xQX, the value of P is configurable. In order to obtain the required f_{PLL}, the values of N and K can be chosen respectively by the bits NDIV and K2DIV for different oscillator input frequencies. When configuring the required f_{PLL} it has to be ensured that the limits of parameter f_{sys}, f_{REF} and f_{VCO} are kept.***

7.3.3.3 Oscillator Watchdog

The oscillator watchdog monitors the external incoming clock f_{OSC}. Only incoming frequencies that are too low to enable a stable operation of the VCO circuit are detected.

As reference clock the internal oscillator (OSC_PLL) frequency f_{INT} is used and therefore the internal oscillator must be put into operation.

By setting bit OSC_CON.OSCWDTRST the oscillator watchdog can be restarted without a reset of the complete PLL. The detection status output is only valid after some cycles of f_{INT}.

7.3.3.4 PLL VCO Lock Detection

The PLL has a lock detection that supervises the VCO part of the PLL in order to differentiate between stable and instable VCO circuit behavior. The lock detector marks the VCO circuit and therefore the output f_{VCO} of the VCO as instable if the two inputs f_{REF} and f_{DIV} differ too much. Changes in one or both input frequencies below a level are not marked by a loss of lock because the VCO can handle such small changes without any problem for the system. **Table 41** shows values below that the lock is not lost for different input values.

Table 41 Loss of VCO Lock Definition

Maximum Allowed Changing		
df_{DIV}/dt for f_{REF} =		(4)
0.8 MHz	**1 MHz**	**1.25 MHz**
≤ 0.54 kHz/µs	≤ 0.96 kHz/µs	≤ 1.49 kHz/µs

7.3.3.5 Internal Oscillator (OSC_PLL)

The PLL internal oscillator is used for two different purposes:

Providing a Input Clock to the PLL

OSC_PLL operates at nominal frequency of 5 MHz.

The OSC_PLL can be used as input clock for all PLL modes. This is controlled and configured via OSC_CON.OSCSS.

Operating the Oscillator Watchdog

The input frequency for the PLL direct from OSC_HP (XTAL), is supervised using the OSC_PLL as reference frequency. For more information see **Section 7.3.3.3**.

7.3.3.6 Switching PLL Parameters

The following restriction applies when changing PLL parameters via the PLL_CON register:

- Prescaler Mode (VCO bypass) may be enabled at any time, however, it has to be ensured that the maximum operating frequency of the device f_{sys} (see data sheet) will not be exceeded.
- Before switching NDIV, the Prescaler Mode has to be selected.
- K1DIV as well as K2DIV may be switched at any time, however, it has to be ensured that the maximum operating frequency f_{sys_max} of the device will not be exceeded.
- Only one parameter should be switched at one register write operation.
- Before switching the input clock source via OSC_CON.OSCSS, the Prescaler Mode has to be selected. Due to a following potential oscillator watchdog event, the PLL may switch to Freerunning Mode. The procedure to set up the PLL in normal operation follows that as stated in **Section 7.3.3.8**.
- Before deselecting the Prescaler Mode, the PLL_CON.RESLD bit has to be set and then the LOCK flag has to be checked. Only when the LOCK flag is set again, the Prescaler Mode may be deselected.

Note: PDIV and NDIV can also be switched in Normal Mode. When changing NDIV, it must be regarded that the VCO clock fVCO may exceed the target frequency until the PLL becomes locked. After changing PDIV or NDIV, it must be waited for the PLL lock condition. This procedure is typically used for increasing the VCO clock step-by-step.

7.3.3.7 Oscillator Watchdog Event or PLL Loss of Lock Detection

In case of detection of too low frequency of the external clock source f_{OSC}, the OSC-Too-Low flag (OSC_CON.OSC2L) is set. If enabled by NMICON.NMIOWD, a trap request to the CPU is activated correspondingly only in these two cases: 1) When PLL is in Prescaler Mode and OSCSS = 01 selecting f_{OSC} as PLL input clock source and SYSCON0.SYSCLKSEL selects PLL clock output as the system frequency, or 2) When SYSCON0.SYSCLKSEL selects f_{OSC} as the system frequency. With these 2 cases and the OSC2L condition, the OWD NMI flag FNMIOWD in NMISR is set.

Note: Do not restart the oscillator watchdog detection by setting bit OSC_CON.OSCWDTRST while PLL is in Prescaler Mode, as the detection status (OSC_CON.OSC2L) takes some time to be stable.

An oscillator watchdog event normally leads to a following PLL loss-of-lock detection.

If PLL is not the system clock source (SYSCON0.SYSCLKSEL deselects PLL or PLL is in Prescaler Mode) when the loss-of-lock is detected, only the lock flag is reset (PLL_CON.LOCK = 0). No loss-of-lock NMI is generated and no further action is taken. Otherwise if PLL is selected as clock source for system frequency and VCOBYP = 0, the PLL loss-of-lock NMI flag FNMIPLL in NMISR is set. If enabled by NMICON.NMIPLL, an NMI trap request to the CPU is activated. In addition, the lock flag is reset. Note that in the first place, the LOCK flag has to be set first before a loss-of-lock NMI request is generated. This avoids a potential PLL loss-of-lock NMI request after device power-on reset.

On an oscillator watchdog event when PLL is in Prescaler Mode and external clock (OSC_HP) is selected as PLL clock input; or on PLL loss-of-lock detection when PLL is in Normal Mode, the PLL will be switched to run in the Freerunning Mode on the VCO base frequency divided by K2, which is enforced by hardware until the Prescaler Mode is (re-)selected.

Due to the above, the PLL shall only run in Prescaler Mode when changing the PLL configuration or switching between PLL operation modes.

7.3.3.8 Oscillator Watchdog Event or Loss of Lock Recovery

In case of oscillator watchdog NMI, user software can first check if the PLL remains locked. If not, the clock system can be reconfigured again by executing the following sequence as the OWD NMI routine:

1. Restart the oscillator watchdog detection by setting bit OSC_CON.OSCWDTRST
2. Wait until OSC_CON.OSC2L is clear
3. When bit OSC_CON.OSC2L is cleared, then
   a) The Prescaler Mode has to be selected (PLL_CON.VCOBYP = 1)
   b) Setting the restart lock detection bit PLL_CON.RESLD = 1
   c) Waiting until the PLL VCO part becomes locked (PLL_CON.LOCK = 1)
   d) When the LOCK is set again, the Prescaler Mode can be deselected (PLL_CON.VCOBYP = 0) and normal PLL operation is resumed.
4. Clear the OWD NMI flag FNMIOWD.

In the general case of PLL loss-of-lock or to re-configure the PLL settings, user software can try to configure the clock system again by executing the following sequence:

1. If input clock source is from XTAL (f_{OSC} from OSC_HP), ensure the input frequency is above threshold by checking OSC_CON.OSC2L.
2. The Prescaler Mode has to be selected (PLL_CON.VCOBYP = 1)
3. If desired, (re-)configure the PLL divider settings.
4. Setting the restart lock detection bit PLL_CON.RESLD = 1
5. Waiting until the PLL VCO part becomes locked (PLL_CON.LOCK = 1)
6. When the LOCK is set again, the Prescaler Mode can be deselected (PLL_CON.VCOBYP = 0) and normal PLL operation is resumed.
7. Clear the PLL loss-of-lock NMI flag FNMIPLL.

7.3.4 Clock Control Unit

The Clock Control Unit (CCU) receives the clock from the PLL f_{PLL}, the external input clock f_{OSC}, the internal input clock f_{INTOSC}, or the low-precision input clock f_{LP_CLK}. The system frequency is derived from one of these clock sources.

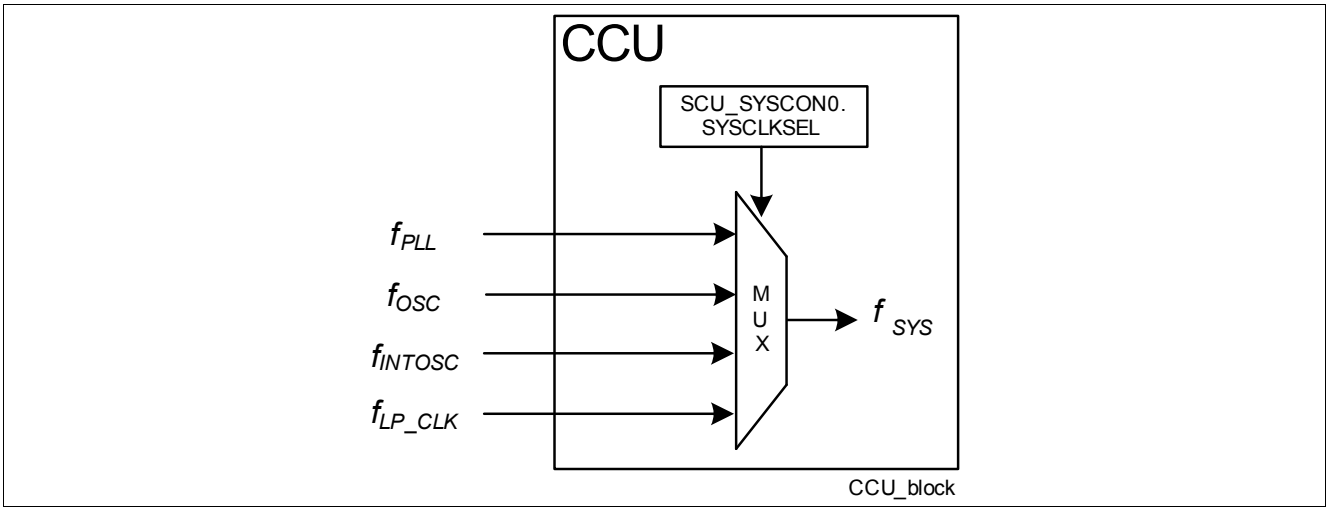

Figure 29 Clock Inputs to Clock Control Unit

The CCU generates all necessary clock signals within the microcontroller from the system clock. It consists of:

- Clock slow down circuitry
- Centralized enable/disable circuit for clock control

In normal running mode, the main module frequencies (synchronous unless otherwise stated) are as follows:

- System frequency, f_{SYS} = up to 25 MHz or 40 MHz (product variant dependant) (measurement interface clock MI_CLK is derived from this clock)
- CPU clock (CCLK, SCLK) = up to 25 MHz or 40 MHz (product variant dependant) (divide-down of NVM access clock)
- NVM access clock (NVMACCCLK) = up to 25 MHz or 40 MHz (product variant dependant)
- Peripheral clock (PCLK, PCLK2, NVMCLK) = up to 25 MHz or 40 MHz (product variant dependant) (equals CPU clock; must be same or higher)

Some peripherals are clocked by PCLK, others clocked by PCLK2 and the NVM is clocked by both NVMCLK and NVMACCCLK. During normal running mode, PCLK = PCLK2 = NVMCLK = CCLK. On wake-up from power-down mode, PCLK2 is restored similarly like NVMCLK, whereas PCLK is restored only after PLL is locked.

For optimized NVM access (read/write) with reduced wait state(s) and with respect to system requirements on CPU operational frequency, bit field NVMCLKFAC is provided for setting the frequency factor between the NVM access clock NVMACCCLK and the CPU clock CCLK.

For the slow down mode, the operating frequency is reduced using the slow down circuitry with clock divider setting at the bit field CLKREL. Bit field CLKREL is only effective when slow down mode is enabled via SFR bit PMCON0.SD bit. Note that the slow down setting of bit field CLKREL correspondingly reduces the NVMACCCLK clock. Slow down setting does not influence the erase and write cycles for the NVM.

Peripherals UART1, UART2, T2 and T21 and are not influenced by CLKREL and either not by NVMCLKFAC, to allow functional LIN communication in slow down mode.

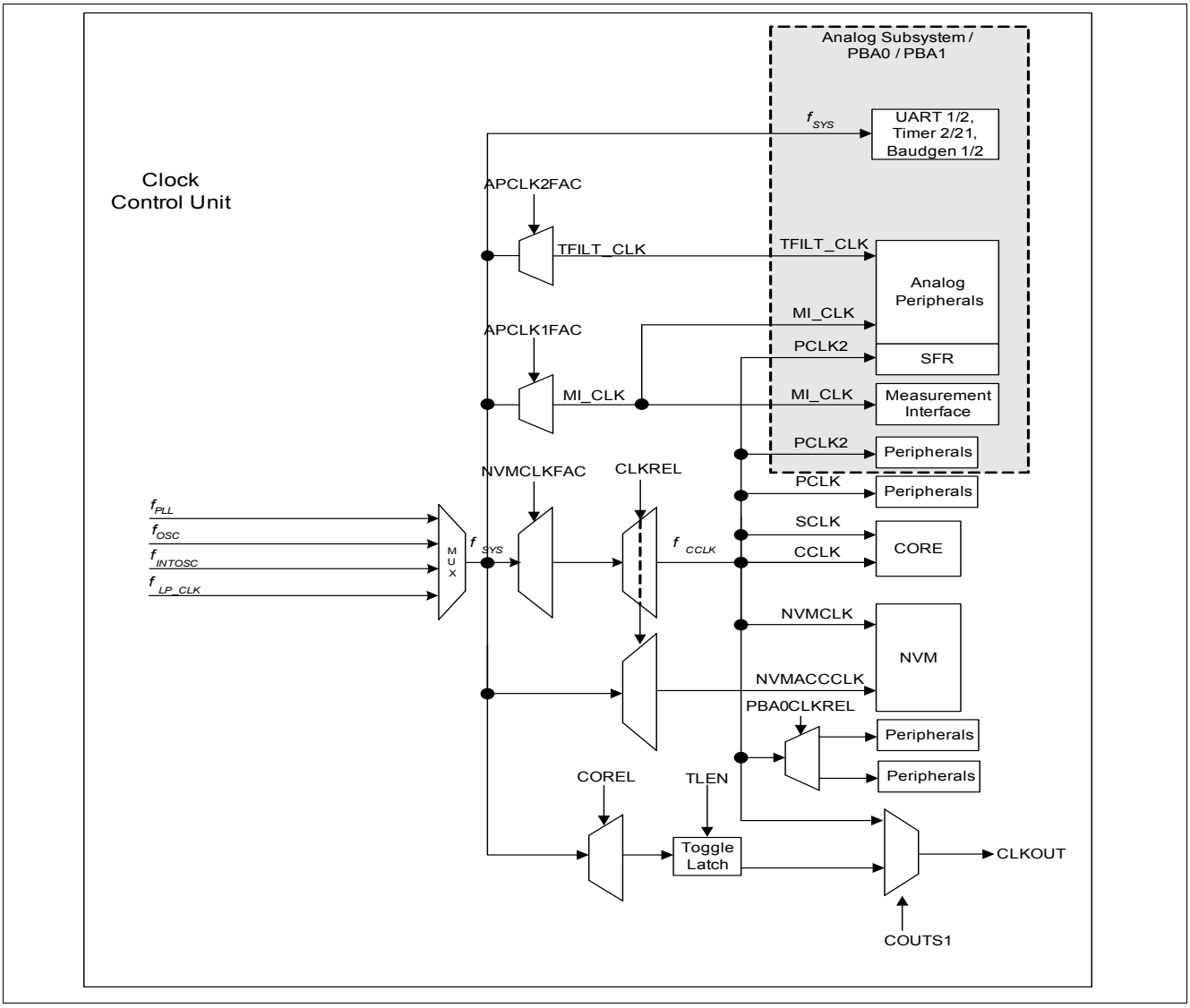

Figure 30 Clock Generation from f_{sys}; CLKOUT Generation

7.3.4.1 Clock Tree

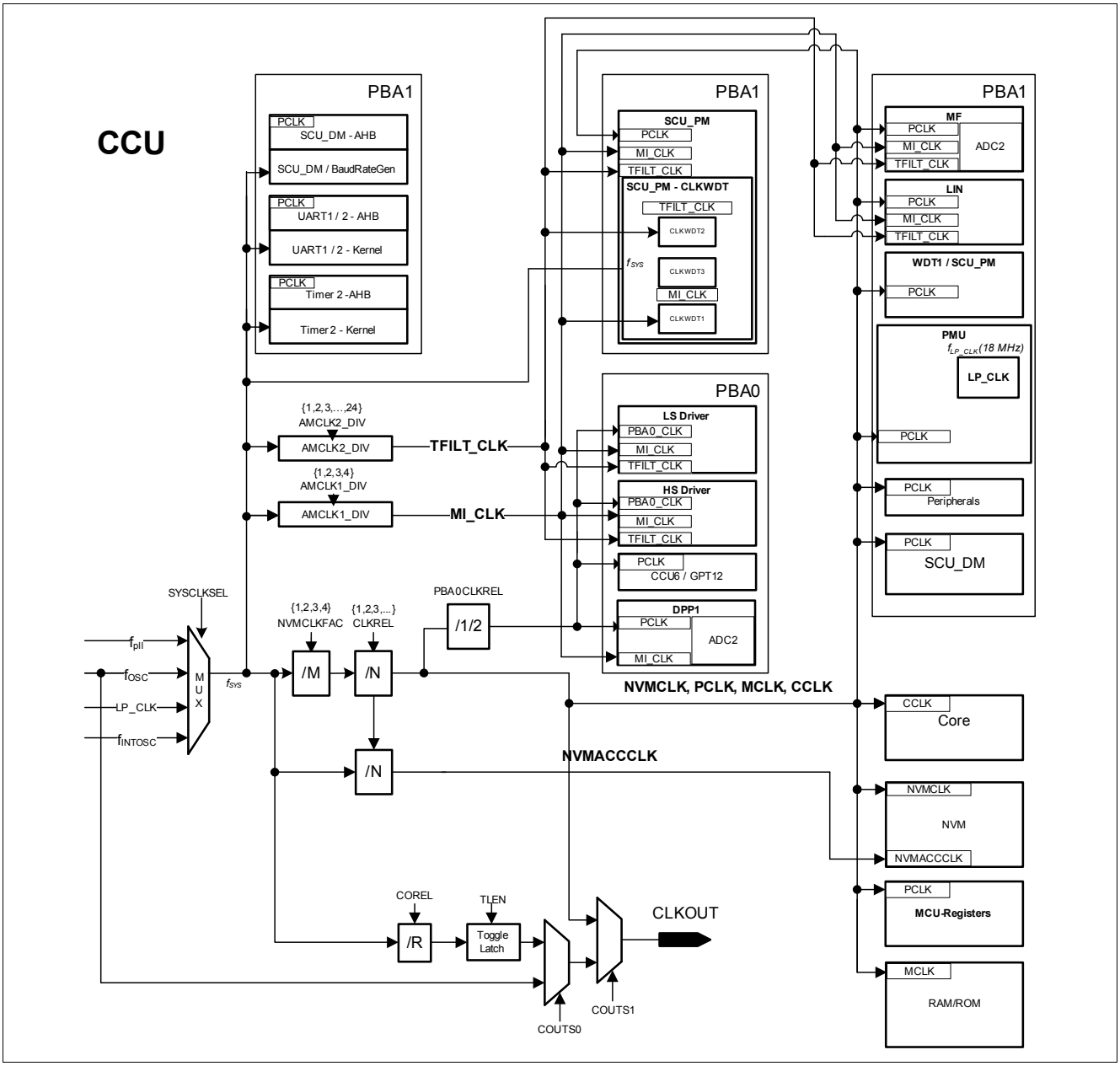

Figure 31 Clock Tree

7.3.4.2 Startup Control for System Clock

Typically when the TLE984xQX starts up after reset, the LP_CLK is selected by hardware to provide the system frequency f_{SYS}. CPU runs based on this system frequency during startup operation by boot firmware (unless otherwise specified and configured by firmware). Meanwhile, the system clock input is switched to the PLL output. With user boot configuration, the PLL is configured with internal oscillator (5 MHz) as input, by default. User code can modify the default PLL configuration as required.

The exception to the above is with resets that do not reset the clock system, which are watchdog timer (WDT) reset and soft reset. With these resets, the previous user configuration of PLL and clock system is retained across the reset.

Note: In the event the PLL fails to lock during startup operation, the LP_CLK continues to provide the system clock input. The system clock input source is indicated by the register bit field SYSCON0.SYSCLKSEL.

7.3.5 External Clock Output

An external clock output is provided as CLKOUT. This output clock can be enabled/disabled via bit COCON.EN. One of three clock sources (f_{CCLK} or f_{SYS}/n or f_{OSC}) can be selected for output, configured via bit fields COCON.COUTS1 and COUTS0.

If COUTS1 = 0 (independent on COUTS0), the output clock is f_{CCLK}. Otherwise, if COUTS0 = 0, the output clock is from oscillator output frequency; if COUTS0 = 1, the clock output frequency is chosen by the bit field COREL which selects the n divider factor on f_{SYS}. Under this selection, the clock output frequency can further be divided by 2 using a toggle latch (TLEN = 1), the resulting output frequency has 50% duty cycle.

7.3.6 CGU Registers

The registers of the clock generation unit for PLL and oscillator control is not affected by the soft reset. Therefore the system clock configuration and frequency is maintained across these types of reset.
Unless otherwise stated, the reset value as stated for the following registers apply only with Power-On reset, Brown-Out reset, Hard reset, WDT1 reset or Wake-up reset.

7.3.6.1 PLL Oscillator Register

These registers control the setting and trimming of OSC_PLL, the Power Down of XTAL (OSC_HP) and the control and status monitor of oscillator watchdog.

OSC Control Register

SCU_OSC_CON	Offset	Reset Value
OSC Control Register	$0B0_H$	see Table 42

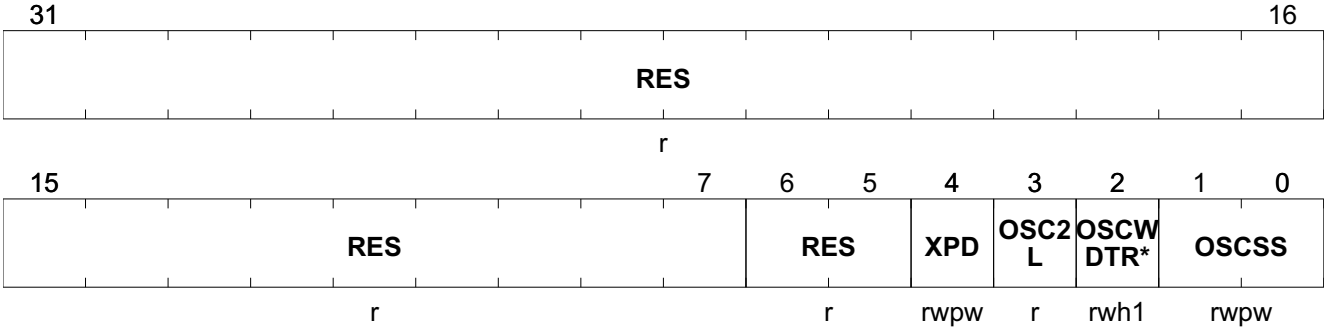

Field	Bits	Type	Description
RES	31:7	r	**Reserved** This bit field is always read as zero.
RES	6:5	r	**Reserved** This bit field is always read as zero.
XPD	4	rwpw	**XTAL (OSC_HP) Power Down Control** This is a PASSWD protected bit. When the protection scheme (see **Chapter 7.14**) is activated (default), this bit cannot be written directly. *Note: When XPD is set, switch of clock source to internal oscillator has to be done asynchronous.* 0_B XTAL (OSC_HP) is not powered down. 1_B XTAL (OSC_HP) is powered down.

Field	Bits	Type	Description
OSC2L	3	r	**OSC-Too-Low Condition Flag** The Oscillator Watchdog monitors the f_{OSC}. On OSC-too-low detection (OSC2L: 0 →1) and VCOBYP = 1 and OSCSS = 01, PLL switches to freerunning mode. On above condition, and when f_{OSC} is selected as the system clock source, hardware switches the system clock source to PLL (**SCU_SYSCON0**.SYSCLKSEL is also updated). *Note: OWD NMI request is activated on OSC-too-low condition only in two cases: 1) when VCOBYP = 1 and OSCSS = 01 and SYSCLKSEL selects PLL clock as system clock source; 2) when SYSCLKSEL selects f_{OSC} as system clock source.* 0_B f_{OSC} is above threshold. 1_B f_{OSC} is below threshold.
OSCWDTRST	2	rwh1	**Oscillator Watchdog Reset** Setting this bit will reset the OSC2L status flag to 1 and restart the oscillator detection. This bit will be automatically reset to 0 and thus always be read back as 0. 0_B No effect. 1_B Reset OSC2L flag and restart the oscillator watchdog of the PLL.
OSCSS	1:0	rwpw	**Oscillator Source Select** This is a PASSWD protected bit. When the protection scheme (see **Chapter 7.14**) is activated (default), this bit cannot be written directly. **Notes** 1. *Synchronous switching of clock source to internal oscillator is not possible when XPD = 1 or no external clock is available (check bit OSC2L).* 2. *Use the 1X option only when the external clock is not available.* 00_B PLL internal oscillator OSC_PLL (f_{INT}) is selected synchronously as f_R. 01_B XTAL (f_{OSC} from OSC_HP) is selected synchronously as f_R. $1x_B$ PLL internal oscillator OSC_PLL (f_{INT}) is selected asynchronously as f_R.

Table 42 RESET of SCU_OSC_CON

Register Reset Type	Reset Values	Reset Short Name	Reset Mode	Note
RESET_TYPE_4	00000010_H	RESET_TYPE_4		

7.3.6.2 PLL Registers

These registers control the PLL configuration or settings.

PLL Control Register

SCU_PLL_CON	Offset	Reset Value
PLL Control Register	044_H	see Table 43

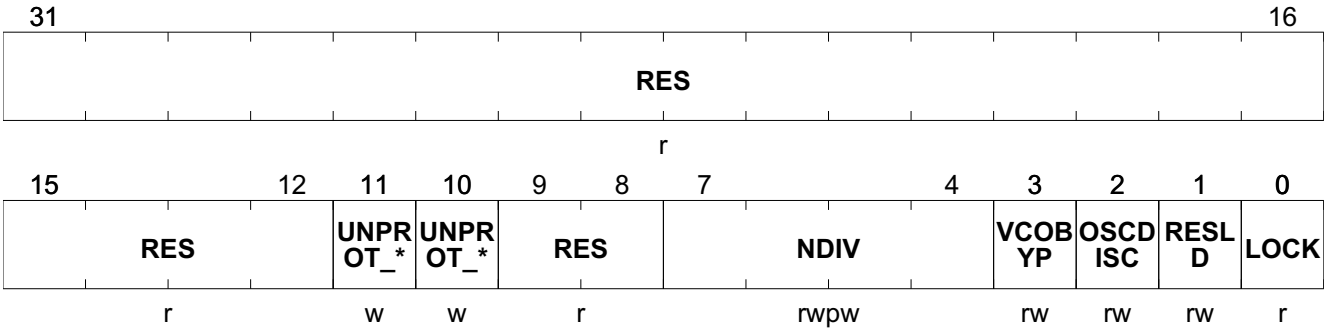

Field	Bits	Type	Description
RES	31:12	r	**Reserved** Returns 0 if read; should be written with 0.
UNPROT_VCOBYP	11	w	**Unprotect write access of VCO_BYP** Writing this Bit within an write access of VCO_BYP will overtake the provided value to VCO_BYP without protection Note: Read is always ‘0’
UNPROT_OSCDISC	10	w	**Unprotect write access of OSC_DISC** Writing this Bit within an write access of OSCDISC will overtake the provided value to OSCDISC without protection Note: Read is always ‘0’
RES	9:8	r	**Reserved** Returns 0 if read; should be written with 0.

Field	Bits	Type	Description
NDIV	7:4	rwpw	**PLL N-Divider** This is a PASSWD protected bit. When the protection scheme (see **Chapter 7.14**) is activated (default), this bit cannot be written directly. 0000_B N = 48 0001_B N = 50 0010_B N = 51 0011_B N = 52 0100_B N = 54 0101_B N = 60 0110_B N = 67 0111_B N = 72 1000_B N = 75 1001_B N = 78 1010_B N = 80 1011_B N = 88 1100_B N = 90 1101_B N = 94 1110_B N = 100 1111_B N = 160
VCOBYP	3	rw	**PLL VCO Bypass Mode Select** This bit is cleared by hardware when PLL switches to freerunning mode. When the bit value changes from 0 to 1, bit OSCDISC = 0. 0_B Normal (or freerunning) operation (default) 1_B Prescaler Mode; VCO is bypassed (PLL output clock is derived from input clock divided by K1-divider)
OSCDISC	2	rw	**Oscillator Disconnect** By default after power-on reset, PLL is running in Freerunning Mode (osc is disconnected). 0_B Oscillator is connected to the PLL 1_B Oscillator is disconnected to the PLL.
RESLD	1	rw	**Restart Lock Detection** Setting this bit will reset the PLL lock status flag and restart the lock detection. This bit will be automatically reset to 0 and thus always be read back as 0. 0_B No effect. 1_B Reset lock flag and restart lock detection.

Field	Bits	Type	Description
LOCK	0	r	**PLL Lock Status Flag** **Notes** *1. In case of a loss of VCO lock the f_{VCO} goes to the upper boundary of the selected VCO band if the reference clock input is greater as expected.* *2. In case of a loss of VCO lock the f_{VCO} goes to the lower boundary of the selected VCO band if the reference clock input is lower as expected.* *3. On loss-of-lock detection (LOCK: 1 →0) and when VCOBYP = 0, PLL switches to freerunning mode.* *4. Loss-of-lock NMI request is activated only on loss-of-lock detection when VCOBYP = 0 and SYSCON0.SYSCLKSEL selects PLL clock as system frequency.* 0_B The frequency difference of f_{REF} and f_{DIV} is greater than allowed. The VCO part of the PLL can not lock on a target frequency. 1_B The frequency difference of f_{REF} and f_{DIV} is small enough to enable a stable VCO operation.

Table 43 RESET of SCU_PLL_CON

Register Reset Type	Reset Values	Reset Short Name	Reset Mode	Note
RESET_TYPE_4	$000000A4_H$	RESET_TYPE_4		

Clock Control Register 1

SCU_CMCON1	Offset	Reset Value
Clock Control Register 1	048_H	see Table 44

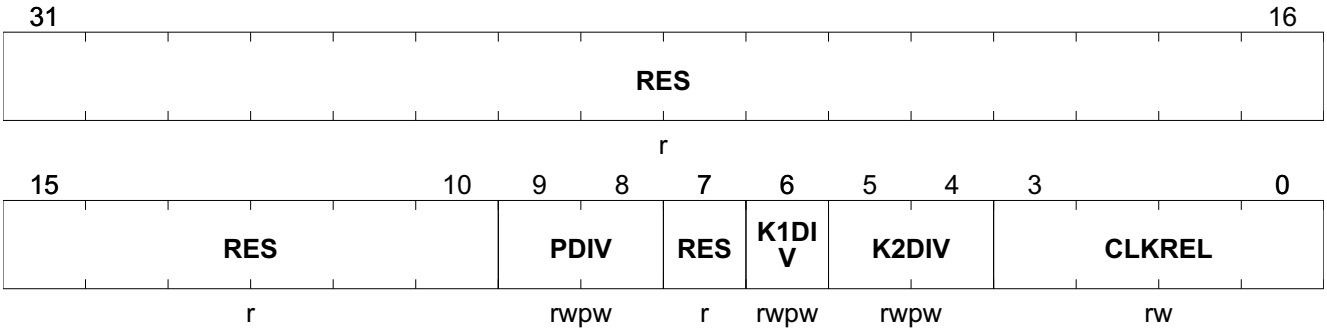

Field	Bits	Type	Description
RES	31:10	r	**Reserved** Returns 0 if read; should be written with 0.
PDIV	9:8	rwpw	**PLL PDIV-Divider** This is a PASSWD protected bit. When the protection scheme (see **Chapter 7.14**) is activated (default), this bit cannot be written directly. **00: 4** **01: 5 (default)** **10: 6** **11: 6**
RES	7	r	**Reserved** Returns 0 if read; should be written with 0.
K1DIV	6	rwpw	**PLL K1-Divider** This is a PASSWD protected bit. When the protection scheme (see **Chapter 7.14**) is activated (default), this bit cannot be written directly. 0_B K1 = 2 1_B K1 = 1
K2DIV	5:4	rwpw	**PLL K2-Divider** This is a PASSWD protected bit. When the protection scheme (see **Chapter 7.14**) is activated (default), this bit cannot be written directly. *Note: Depending on VCOSEL, the user has to set the K2-divider factor large enough to ensure the PLL output frequency in freerunning mode is never higher than that specified for the device.* 00_B K2 = 2 01_B K2 = 3 10_B K2 = 4 11_B K2 = 5

Field	Bits	Type	Description
CLKREL	3:0	rw	**Slow Down Clock Divider for f_{CCLK} Generation** This setting is effective only when the device is enabled in Slow Down Mode. *Note: f_{SYS} is further divided by the NVMCLKFAC factor to generate f_{CCLK}.* 0000_B f_{sys} 0001_B $f_{sys}/2$ 0010_B $f_{sys}/3$ 0011_B $f_{sys}/4$ 0100_B $f_{sys}/8$ 0101_B $f_{sys}/16$ 0110_B $f_{sys}/24$ 0111_B $f_{sys}/32$ 1000_B $f_{sys}/48$ 1001_B $f_{sys}/64$ 1010_B $f_{sys}/96$ 1011_B $f_{sys}/128$ 1100_B $f_{sys}/192$ 1101_B $f_{sys}/256$ 1110_B $f_{sys}/384$ 1111_B $f_{sys}/512$

Table 44 RESET of SCU_CMCON1

Register Reset Type	Reset Values	Reset Short Name	Reset Mode	Note
RESET_TYPE_4	00000100_H	RESET_TYPE_4		

Clock Control Register 2

SCU_CMCON2	Offset	Reset Value
Clock Control Register 2	$04C_H$	see Table 45

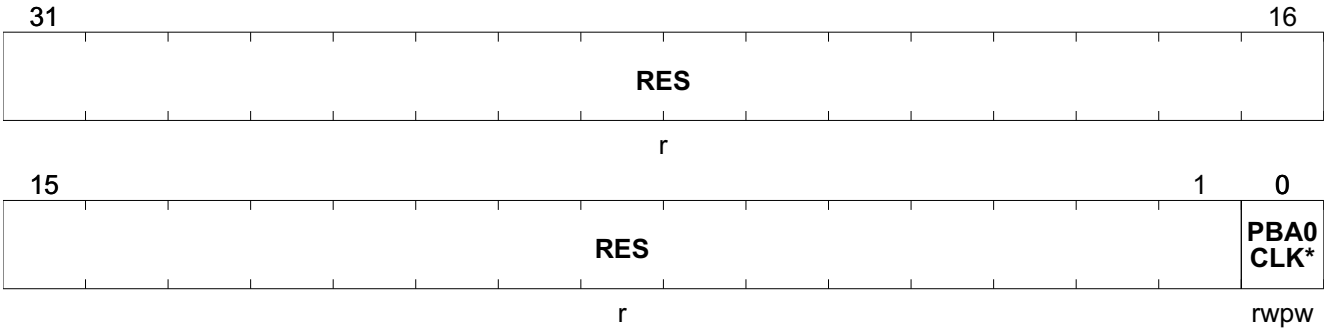

Field	Bits	Type	Description
RES	31:1	r	**Reserved** This bit field is always read as zero.
PBA0CLKREL	0	rwpw	**PBA0 Clock Divider** This Flag configures the PBA0 clock divider. *Note: This is a PASSWD protected bit. When the protection scheme (see **Chapter 7.14**) is activated (default), this bit cannot be written directly.* 0_B divide by 1 1_B divide by 2

Table 45 RESET of SCU_CMCON2

Register Reset Type	Reset Values	Reset Short Name	Reset Mode	Note
RESET_TYPE_4	00000000_H	RESET_TYPE_4		

7.3.6.3 System Clock Control Registers

The clock source for the system is selected via register SYSCON0.

System Control Register 0

SCU_SYSCON0	Offset	Reset Value
System Control Register 0	070_H	see Table 46

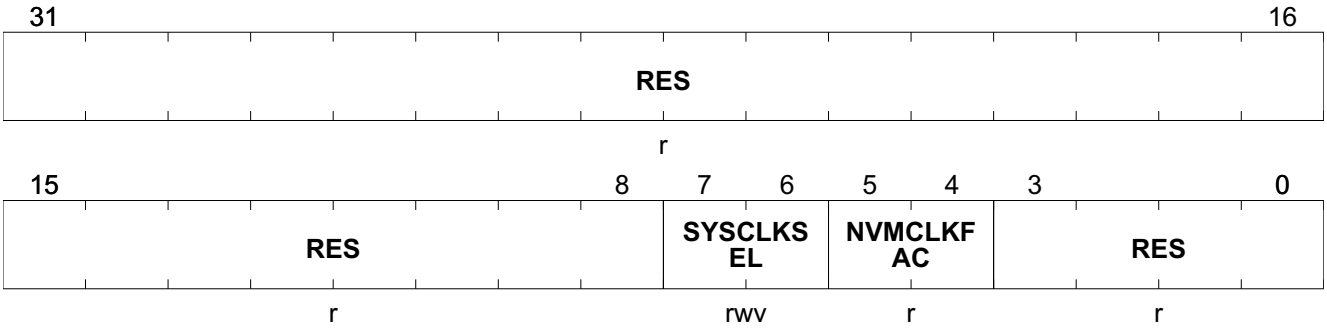

Field	Bits	Type	Description
RES	31:8	r	**Reserved** Returns 0 if read; should be written with 0.
SYSCLKSEL	7:6	rwv	**System Clock Select** *Note: This is a PASSWD protected bit. When the protection scheme (see Chapter 7.14) is activated (default), this bit cannot be written directly.* This bit field defines the clock source that is used as system clock for the system operation. *Note: In normal application, it is expected that the system is running on the PLL clock output.* 00_B The PLL clock output signal f_{PLL} is used 01_B The direct clock input from f_{OSC} is used 10_B The direct low-precision clock input from f_{LP_CLK} is used. 11_B The direct input from internal oscillator f_{INTOSC} is used
NVMCLKFAC	5:4	r	**NVM Access Clock Factor** This bit field defines the factor by which the system clock is divided down, with respect to the synchronous NVMACCCLK clock. Note: Can only be changed via dedicated BROM routine. 00_B Divide by 1 01_B Divide by 2 10_B Divide by 3 11_B Divide by 4

Field	Bits	Type	Description
RES	3:0	r	**Reserved** Returns 0 if read; should be written with 0.

Table 46 RESET of SCU_SYSCON0

Register Reset Type	Reset Values	Reset Short Name	Reset Mode	Note
RESET_TYPE_4	00000080_H	RESET_TYPE_4		

7.3.6.4 Analog Peripherals Clock Control Registers

The clock frequency for the analog modules is selected via register APCLK. The APCLK is used as operating clock for all analog peripherals. For this reason it is important to choose always the required frequency range, if system clock is changed.

Analog Peripheral Clock Control Register

SCU_APCLK_CTRL	Offset	Reset Value
Analog Peripheral Clock Control Register	054_H	see Table 47

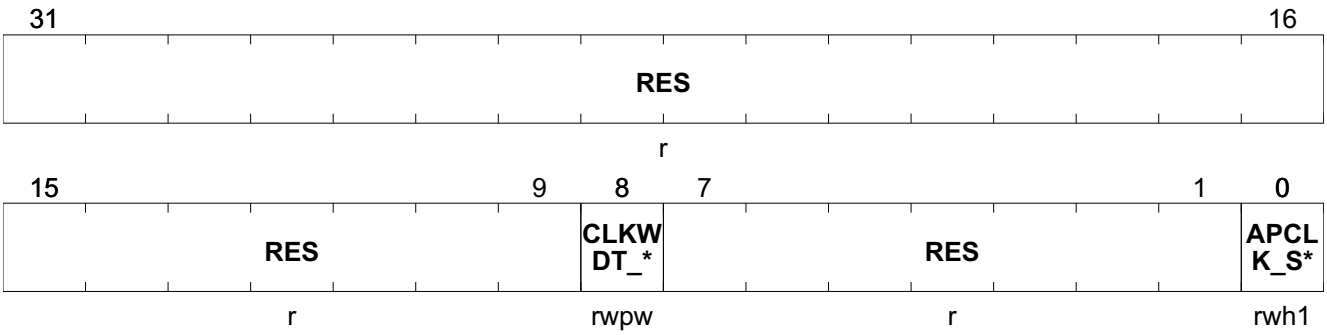

Field	Bits	Type	Description
RES	31:9	r	**Reserved** Returns 0 if read; should be written with 0.
CLKWDT_IE	8	rwpw	**Clock Watchdog Interrupt Enable** Returns 0 if read; should be written with 0. *Note: This is a PASSWD protected bit. When the protection scheme (see **Chapter 7.14**) is activated (default), this bit cannot be written directly.* 0_B Interrupt disabled 1_B Interrupt enabled
RES	7:1	r	**Reserved** Returns 0 if read; should be written with 0.
APCLK_SET	0	rwh1	**Set and Overtake Flag for Clock Settings** This Flag makes the APCLK1, APCLK2 Settings valid. Note: If APCLK_SET is cleared by hardware once the clock setting are overtaken 0_B Clock Settings are ignored (previous values are held) 1_B Clock Settings are overtaken

Table 47 RESET of SCU_APCLK_CTRL

Register Reset Type	Reset Values	Reset Short Name	Reset Mode	Note
RESET_TYPE_4	00000000_H	RESET_TYPE_4		

Analog Peripheral Clock Register

The clock source for the analog modules is selected via register APCLK.

SCU_APCLK	Offset	Reset Value
Analog Peripheral Clock Register	058_H	see Table 48



Field	Bits	Type	Description
RES	31:26	r	**Reserved** Returns 0 if read; should be written with 0.
BGCLK_DIV	25	rwpw	**Bandgap Clock Divider** This Flag configures the bandgap clock divider. *Note: This is a PASSWD protected bit. When the protection scheme (see **Chapter 7.14**) is activated (default), this bit cannot be written directly.* 0_B divide by 2 1_B divide by 1
BGCLK_SEL	24	rwpw	**Bandgap Clock Selection** This Flag selects the bandgap clock. Note: If SYSCLKSEL[1] = ‘1’ the default BGCLK_SEL = “0” (LP_CLK) is taken *Note: This is a PASSWD protected bit. When the protection scheme (see **Chapter 7.14**) is activated (default), this bit cannot be written directly.* 0_B LP_CLK is selected 1_B f_{sys} is selected
RES	23:13	r	**Reserved** Returns 0 if read; should be written with 0.

Field	Bits	Type	Description
APCLK2FAC	12:8	rw	**Slow Down Clock Divider for TFILT_CLK Generation** This setting is effective only when the APCLK_SET = 1. Other bit combinations equivalent. **Notes** 1. *If SYSCLKSEL[1] = '1' (LP_CLK) the default APCLK2FAC = 8 is taken* 2. *if SYSCLKSEL[1:0] = "11" (fINTOSC 20/40M) and OSC80MDIV[1] = 0 the value APCLK2FAC = 19 is taken* 3. *if SYCLKSEL[1:0] = "11" (fintOSC 20/40M) and OSC80MDIV[1] = 1 the value APCLK2FAC = 9 is taken* 4. *f_{SYS} is further divided by the APCLK2FAC factor to generate TFILT_CLK. The clock should be always at 2 MHz.* 00000_B f_{sys} 00001_B $f_{sys}/2$ 00010_B $f_{sys}/3$ 00011_B $f_{sys}/4$ 00100_B $f_{sys}/5$ 00101_B $f_{sys}/6$ 00110_B $f_{sys}/7$ 00111_B $f_{sys}/8$ 01000_B $f_{sys}/9$ 01001_B $f_{sys}/10$ 01010_B $f_{sys}/11$ 01011_B $f_{sys}/12$ 11110_B $f_{sys}/24$ 11111_B $f_{sys}/32$
RES	7:2	r	**Reserved** Always read as zero.
APCLK1FAC	1:0	rw	**Analog Module Clock Factor** This bit field defines the factor by which the system clock is divided down, with respect to the synchronous MI_CLK clock. 00_B Divide by 1 01_B Divide by 2 10_B Divide by 3 11_B Divide by 4 The APCLKFAC bit is not a protected bit. This setting is only effective when APCLK_SET = 1. Note: If SYSCLKSEL[1] = '1' (LP_CLK) the default APCLK1FAC = "00" is taken (divide by 1) if SYCLKSEL[1:0] = "11" and OSC80MDIV = 0 the value APCLK1FAC = "01" is taken if SYSCLKSEL[1:0] = "11" and OSC80MDIV = 1 the value APCLK1FAC = "00" is taken

Table 48 RESET of SCU_APCLK

Register Reset Type	Reset Values	Reset Short Name	Reset Mode	Note
RESET_TYPE_4	00000000_H	RESET_TYPE_4		

Table 49 Possible Clock Configurations

Scenarios[1)]	f_{sys} [MHz]	pclk [MHz]	pba0_clk [MHz]	mi_clk [MHz]	tfilt_clk [MHz]
1:lowest possible system frequency	5	< 5	< 5	< 20	< 2
2: max. frequency scenario 1	25	< 25	< 25	< 20	< 2
3: max. frequency scenario 2	40	< 40	< 40	< 20	< 2

1) besides of this scenarios which represent a kind of worst case all other scenarios shall not lead to an unrecoverable system state.

Table 50 Suggested Value for APCLK

Clock Frequency	APCLK1FAC	APCLK2FAC
18 Mhz (Ip_clk)	00_H (default)	08_H (default)
24 Mhz (Pll clk)	00_H	$0B_H$
40 Mhz (Pll clk)	01_H	13_H

ADC1 Peripheral Clock Register

SCU_ADC1_CLK	Offset	Reset Value
ADC1 Peripheral Clock Register	$06C_H$	see Table 51

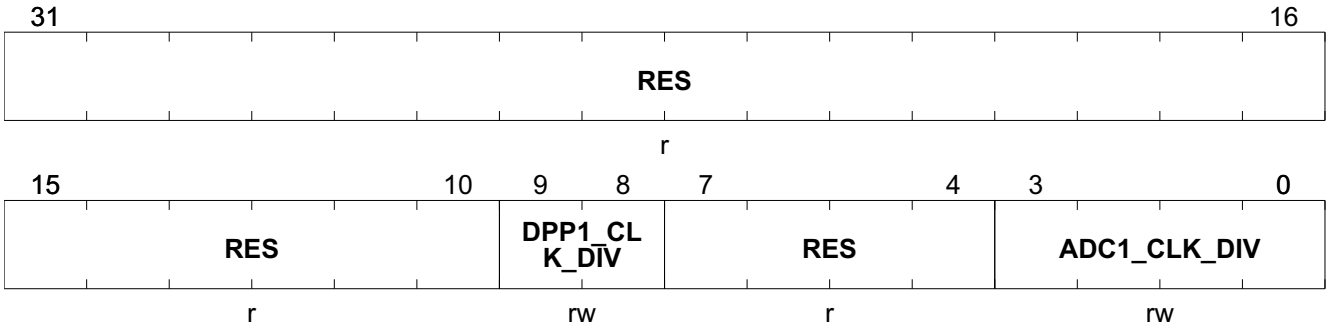

Field	Bits	Type	Description
RES	31:10	r	**Reserved** Returns 0 if read; should be written with 0.
DPP1_CLK_DIV	9:8	rw	**ADC1 Post processing clock divider** This bit field defines the factor by which the system clock is divided for the post processing of ADC1. 00_B Divide by 1 01_B Divide by 2 10_B Divide by 3 11_B Divide by 4
RES	7:4	r	**Reserved** Returns 0 if read; should be written with 0.
ADC1_CLK_DIV	3:0	rw	**ADC1 Clock divider** This bit field defines the factor by which the divided system clock from DPP1_CLK_DIV is divided additionally for ADC1 core clock 0000_B Divide by 1 0001_B Divide by 2 0010_B Divide by 3 0011_B Divide by 4 0100_B Divide by 5 1111_B Divide by 16

Table 51 RESET of SCU_ADC1_CLK

Register Reset Type	Reset Values	Reset Short Name	Reset Mode	Note
RESET_TYPE_4	00000000_H	RESET_TYPE_4		

Analog Peripheral Clock Status Register

The clock source for the analog modules is selected via register APCLK0 and APCLK1.

SCU_APCLK_STS	Offset	Reset Value
Analog Peripheral Clock Status Register	$05C_H$	see Table 52

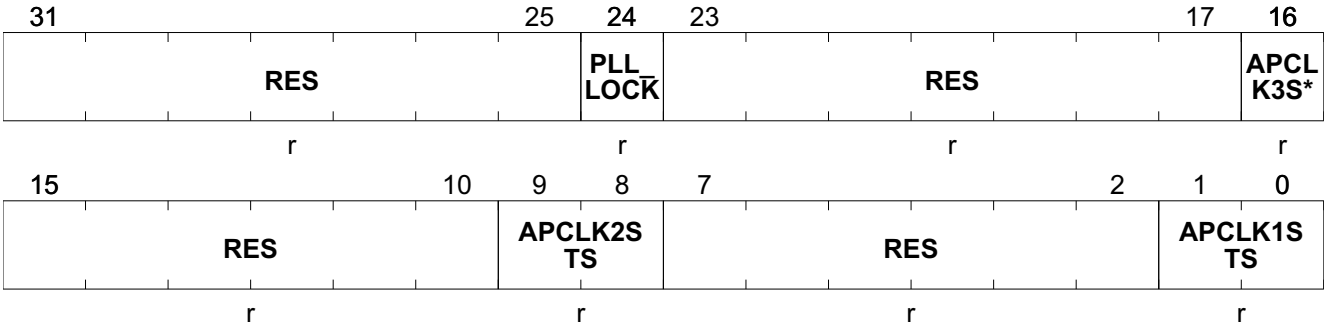

Field	Bits	Type	Description
RES	31:25	r	**Reserved** Returns 0 if read; should be written with 0.
PLL_LOCK	24	r	**PLL LOCK Status** This bit field indicates the PLL lock status. 0_B PLL has not locked 1_B PLL has locked
RES	23:17	r	**Reserved** Returns 0 if read; should be written with 0.
APCLK3STS	16	r	**Loss of Clock Status** This bit field indicate the loss of clock status. 0_B No loss of clock 1_B Loss of Lock occurred
RES	15:10	r	**Reserved** Returns 0 if read; should be written with 0.
APCLK2STS	9:8	r	**Analog Peripherals Clock Status** This bit field reflects the analog peripheral clock source status that is used as system clock for the analog module operation. The implemented clock watchdog (**see Chapter SCU_PM**) is monitoring the frequency of the analog subsystem. If the clock is not inside the required range, a system reset will be issued. *Note: The functionality of the analog modules can only be guaranteed, when their clock is in the required range.* 00_B The TFILT_CLK clock is in the required range 01_B The TFILT_CLK clock exceeds the higher limit 10_B The TFILT_CLK clock exceeds the lower limit 11_B The TFILT_CLK clock is not inside the specified limit.

Field	Bits	Type	Description
RES	7:2	r	**Reserved** Returns 0 if read; should be written with 0.
APCLK1STS	1:0	r	**Analog Peripherals Clock Status** This bit field reflects the analog peripheral clock source status that is used as system clock for the analog module operation. The implemented clock watchdog (**see Chapter SCU_PM**) is monitoring the frequency of the analog subsystem. If the clock is not inside the required range, a system reset will be issued. *Note: The functionality of the analog modules can only be guaranteed, when their clock is in the required range.* 00_B The MI_CLK clock is in the required range 01_B The MI_CLK clock exceeds the higher limit 10_B The MI_CLK clock exceeds the lower limit 11_B The MI_CLK clock is not inside the specified limit.

Table 52 RESET of SCU_APCLK_STS

Register Reset Type	Reset Values	Reset Short Name	Reset Mode	Note
RESET_TYPE_4	00000000_H	RESET_TYPE_4		

Analog Peripheral Clock Status Clear Register

The clock source for the analog modules is selected via register APCLK0 and APCLK1.

SCU_APCLK_SCLR	Offset	Reset Value
Analog Peripheral Clock Status Clear Register	064_H	see Table 53

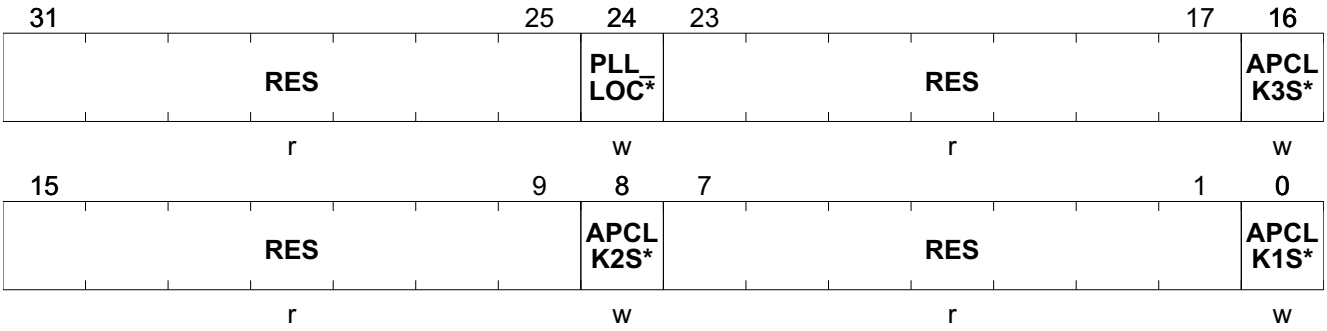

Field	Bits	Type	Description
RES	31:25	r	**Reserved** Returns 0 if read; should be written with 0.
PLL_LOCK_SCLR	24	w	**PLL Lock Status Clear** This bit field is used for PLL_LOCK Status Clear.
RES	23:17	r	**Reserved** Returns 0 if read; should be written with 0.
APCLK3SCLR	16	w	**Analog Peripherals Clock 3 Status Clear** This bit field is used for APCLK3 Status Clear.
RES	15:9	r	**Reserved** Returns 0 if read; should be written with 0.
APCLK2SCLR	8	w	**Analog Peripherals Clock Status Clear** This bit field is used for APCLK2 Status Clear.
RES	7:1	r	**Reserved** Returns 0 if read; should be written with 0.
APCLK1SCLR	0	w	**Analog Peripherals Clock Status Clear** This bit field is used for APCLK1 Status Clear.

Table 53 RESET of SCU_APCLK_SCLR

Register Reset Type	Reset Values	Reset Short Name	Reset Mode	Note
RESET_TYPE_4	00000000_H	RESET_TYPE_4		

7.3.6.5 External Clock Control Register

This register controls the setting of external clock for CLKOUT.

Clock Output Control Register

SCU_COCON	Offset	Reset Value
Clock Output Control Register	$0B4_H$	see Table 54

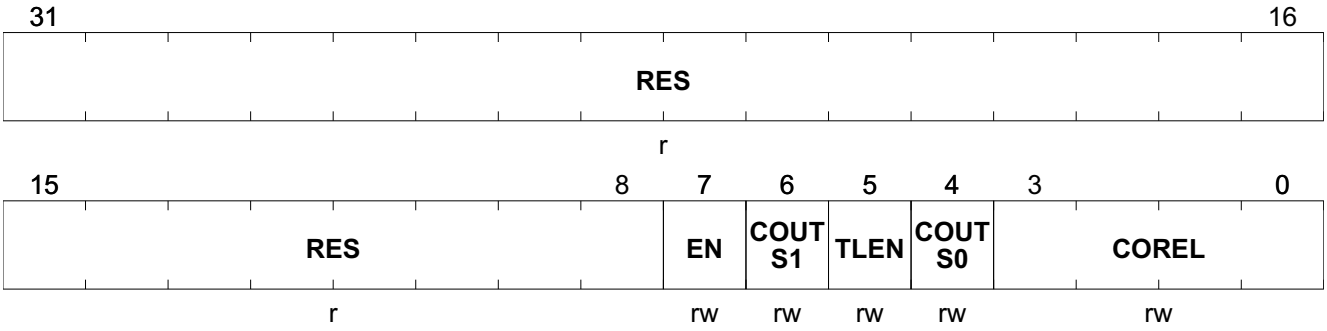

Field	Bits	Type	Description
RES	31:8	r	**Reserved** Returns 0 if read; should be written with 0.
EN	7	rw	**CLKOUT Enable** 0_B No external clock signal is provided 1_B The configured external clock signal is provided
COUTS1	6	rw	**Clock Out Source Select Bit 1** 0_B f_{CCLK} is selected. 1_B Based on setting of COUTS0.
TLEN	5	rw	**Toggle Latch Enable** Enable this bit if 50% duty cycle is desired on CLKOUT. This bit is only applicable when both COUTS1 and COUTS0 are set to 1. 0_B Toggle Latch is disabled. Clock output frequency is chosen by the bit field COREL. 1_B Toggle Latch is enabled. Clock output frequency is half of the frequency that is chosen by the bit field COREL. The resulting output frequency has 50% duty cycle.
COUTS0	4	rw	**Clock Out Source Select Bit 0** This bit is effective only if COUTS1 is set to 1. 0_B Oscillator output frequency is selected. 1_B Clock output frequency is chosen by the bit field COREL.

Field	Bits	Type	Description
COREL	3:0	rw	**Clock Output Divider** 0000_B f_{sys} 0001_B $f_{sys}/2$ 0010_B $f_{sys}/3$ 0011_B $f_{sys}/4$ 0100_B $f_{sys}/6$ 0101_B $f_{sys}/8$ 0110_B $f_{sys}/10$ 0111_B $f_{sys}/12$ 1000_B $f_{sys}/14$ 1001_B $f_{sys}/16$ 1010_B $f_{sys}/18$ 1011_B $f_{sys}/20$ 1100_B $f_{sys}/24$ 1101_B $f_{sys}/32$ 1110_B $f_{sys}/36$ 1111_B $f_{sys}/40$

Table 54 RESET of SCU_COCON

Register Reset Type	Reset Values	Reset Short Name	Reset Mode	Note
RESET_TYPE_4	00000000_H	RESET_TYPE_4		

7.4 Reset Control

This section describes the types of reset and the effects of each reset on the TLE984xQX.

7.4.1 Types of Reset

The following reset types are recognized by the TLE984xQX.

- Power-on reset
  - Requested asynchronously and released by supply voltage V_S reaching the upper threshold. Indication is a direct analysis of V_S undervoltage.
- Brown-out reset
  - Is not differentiated by system with power-on reset.
- Wake-up reset
  - Requested asynchronously by wake-up event during power save mode.
- Hardware reset
  - Requested asynchronously by event on external reset input (pin) .
- WDT1 reset
  - Activated asynchronously by external WDT1 reset event .
- Soft reset
  - Requested synchronously by soft reset event.

7.4.2 Overview

When the TLE984xQX is first powered up or with brown-out condition triggered by supply voltage input(s) going below the threshold, proper voltage thresholds must be reached before the MCU system starts operation with the release of the MCU, CPU and NVM resets. With all resets (except soft and SCU watchdog timer resets), the boot configuration is latched. The CPU starts to execute from the Boot ROM firmware with the release of MCU reset.

If the system is in power save mode, it is possible to wake-up with reset. Wake-up reset is basically equivalent to power-on reset except that it is a ‘warm’ reset and certain settings or configuration of the system are maintained across the reset . A wake-up via hard reset pin while in power save mode is effected as wake-up reset.

The hardware reset function via pin can be used anytime to restart the system.

The external watchdog timer (WDT1) can trigger a WDT1 reset on the system, if the timer is not refreshed before it overflows.

Soft reset can be triggered by application software where applicable.

Note that the boot configuration is only latched with the power-on, brown-out, WDT1, wake-up and hardware resets.

7.4.3 Module Reset Behavior

Table 55 gives an overview on how the various modules or functions of the TLE984xQX are affected with respect to the reset type. A “n” means that the module/function is reset to its default state. Refer to Table 55 for effective reset as priority.

Table 55 Effect of Reset on Modules/Functions

Module/ Function	Power-On/ Brown-Out Reset	Wake-up Reset[1)]	Hardware Reset[1)]	WDT1 Reset[1)]		Soft Reset
CPU Core	n	n	n	n		n
SCU	n except reset indication bit	n except indication bits	n except reset indication bit	n except reset indication bit		n except certain status bits[1)]

Table 55 Effect of Reset on Modules/Functions (cont'd)

Module/ Function	Power-On/ Brown-Out Reset	Wake-up Reset[1)]	Hardware Reset[1)]	WDT1 Reset[1)]		Soft Reset
Peripherals	n	n	n	n		n
Debug System	n	n	n	n		n
Port Control	n	n	n	n		n
FW Startup Execution	Executes all INIT	Sleep: Executes all INIT	Executes most INIT	Executes most INIT		Skips not required INIT
On-Chip Static RAM	Initialized to 0	Sleep: Initialized to 0; Stop: Not affected[2)]	Not affected [2)3)]	Not affected[2)3)]		Not affected[2)]
Memory Extension Stack RAM	Affected	Affected	Affected	Affected		Affected
NVM	n	n	n	n		n incl. MapRAM
Clock System incl. PLL	n	n	n	n		Not affected[3)]

1) MCU sub-system: Hardware reset, WDT1 reset and wake-up reset (from Stop Mode or Sleep Mode) are generally HW-equivalent to power-on/brown-out reset, any exceptions are mainly due to power-on reset being a 'cold' start.

2) Not affected = Reset has no direct effect on RAM contents.

3) If the reset happens during a write to SRAM, the byte in the targeted write address may be corrupted.

7.4.4 Functional Description of Reset Types

This section describes the definition and controls depending on the reset source.

7.4.4.1 Power-On / Brown-out Reset

Power-on reset is the highest level reset whereby the whole system is powered up and reset. Brown-out reset occurs when any required voltage drops below its minimum threshold.

In user mode, the system clock is switched to the PLL output at the defined frequency of the device.

7.4.4.2 Wake-up Reset

Wake-up reset occurs due to enabled event on defined functional input pins leading to reset of device while the device was in power-save mode. Wake-up reset from sleep and power-down (stop) mode is differentiated by respective indicator bits In case of wake-up from Sleep Mode, reset is always effected. Note that event on RESET input pin while device was in power-save mode is effectively a hardware reset. In this case, the wake-up indicator bit WKRS is also set.

Wake-up reset has the next highest priority after power-on/brown-out reset.

In user mode, the system clock is switched to the PLL output at the defined frequency of the device.

7.4.4.3 Hardware Reset

Hardware reset is requested asynchronously by event on external RESET (low active) input pin, and has the next highest priority after wake-up reset.

In case of hardware reset is activated while the device is in power-save mode, this is effectively a wake-up reset. Refer **Figure 7**.

In user mode, the system clock is switched

For details of programming the reset blind time of the external RESET (low active) input pin see the corresponding reset pin blind time register, RESPIN_BLIND_TIME.

7.4.4.4 WDT1 Reset

WDT1 reset occurs due to WDT1 timer overflow or when servicing in a closed window, and has the next highest priority after hardware reset.

In user mode, the system clock is switched to the PLL output at the defined frequency of the device.

7.4.4.5 WDT / Soft Reset

WDT reset occurs due to WDT timer overflow; Soft reset occurs due to software set of the soft reset request bit.

These two resets are at the same priority level (same effect on system) and has the lowest priority level. With these resets, the device continues running on the previous clock system configuration.

7.4.5 Reset Register Description

Reset Control Register

SCU_RSTCON	Offset	Reset Value
Reset Control Register	068_H	see Table 56

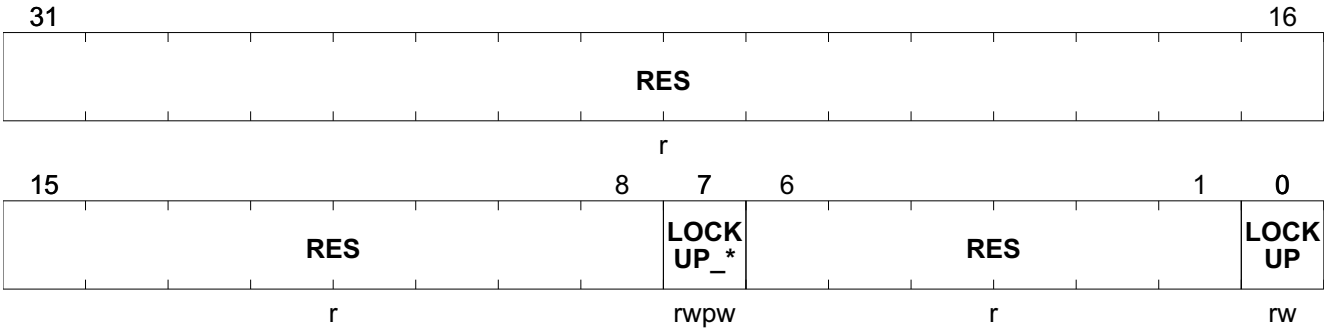

Field	Bits	Type	Description
RES	31:8	r	**Reserved** Returns 0 if read; should be written with 0.
LOCKUP_EN	7	rwpw	**Lockup Reset Enable Flag** *Note: This is a PASSWD protected bit. When the protection scheme (see **Chapter 7.14**) is activated (default), this bit cannot be written directly.* 0_B Lockup is disabled. 1_B Lockup is enabled.
RES	6:1	r	**Reserved** Returns 0 if read; should be written with 0.
LOCKUP	0	rw	**Lockup Flag** *Note: This is a PASSWD protected bit. When the protection scheme (see **Chapter 7.14**) is activated (default), this bit cannot be written directly.* 0_B Lockup Status not active. 1_B Lockup Status active.

Table 56 RESET of SCU_RSTCON

Register Reset Type	Reset Values	Reset Short Name	Reset Mode	Note
RESET_TYPE_3	00000000_H	RESET_TYPE_3		

7.4.6 Booting Scheme

After any power-on reset, brown-out reset, hardware reset, WDT1 reset or wake-up reset, the pins TMS, P0.0, P0.2 together choose different modes. **Table 57**shows the boot selection options available in the TLE984xQX.

Table 57 TLE984xQX Boot Options

TMS/SWD	P0.0	P0.2	MODE
0	x	x	User Mode / BSL Mode
1	1	0	Debug Mode with Serial Wire (SW) port

7.5 Power Management

This section describes the features and functionality provided for power management of the device.

7.5.1 Overview

The TLE984xQX power-management system allows software to configure the various processing units so that they automatically adjust to draw the minimum necessary power for the application.

There are four power modes: Active Mode, Slow Down Mode, Stop Mode and Sleep Mode, as shown in **Figure 11**. Sleep Mode is a special case which can only be exited with a system reset.

The operation of the system components in each of these states can be configured by software. The power modes provide flexible reduction of power consumption through a combination of techniques, including:

- Stopping the CPU clock
- Stopping the clocks of other system components individually
- Clock-speed reduction of some peripheral components
- Power-down of the entire system with fast restart capability
- Reducing or removing the power supply to power domains

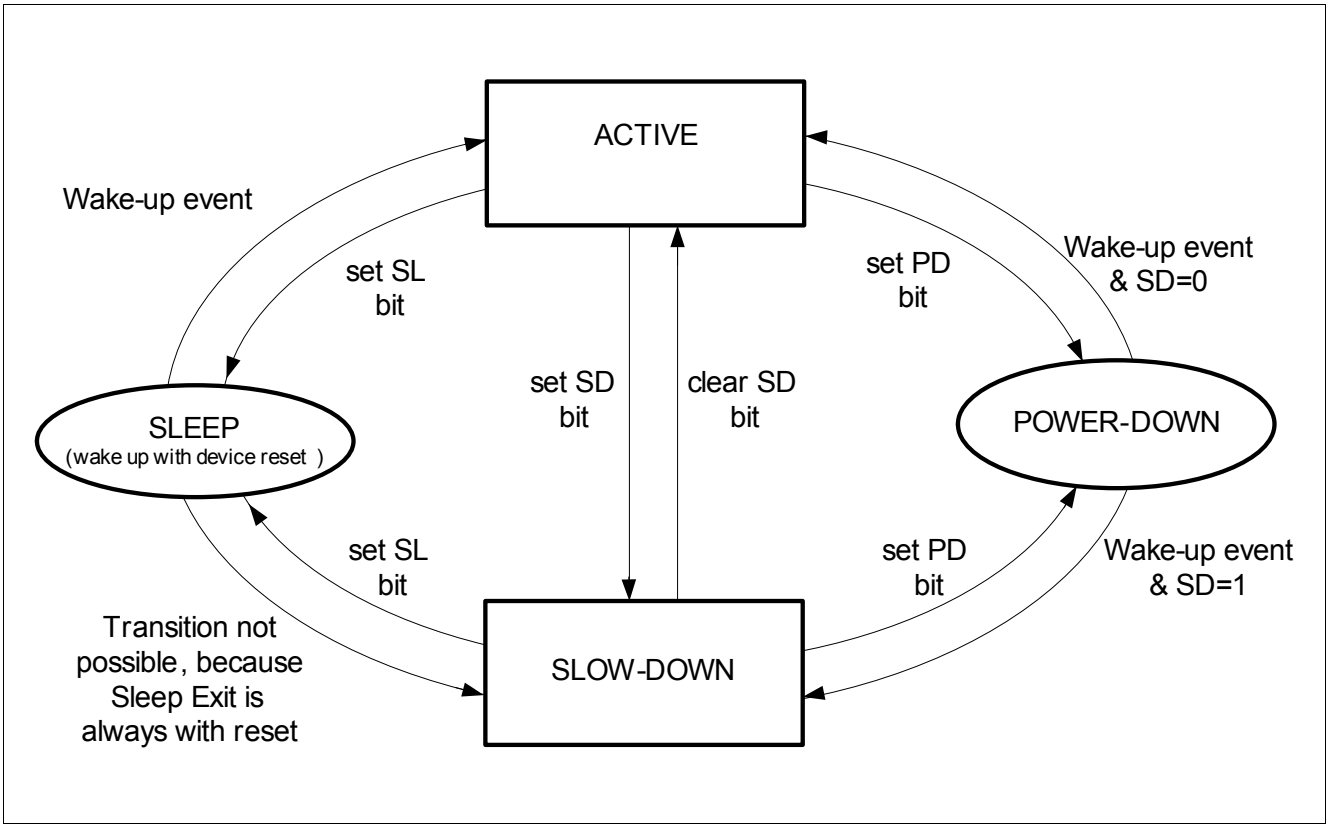

Figure 32 Transition between Various Modes of Operation (without reset)

In Slow Down mode, the clock generation unit is instructed to reduce its clock frequency so that the clock to the system, i.e. Core and peripheral, will be divided by a programmable factor.

In Stop Mode, the clock is turned off. Hence, it cannot be awakened by an interrupt or the Watchdog Timer. It will be awakened only when it receives an external wake-up signal or reset signal. The application must be prepared that the TLE9844 is served with one of these signals. A wake-up circuit is used to detect enabled wake-up signal(s) and activate the Stop Mode wake-up. During Stop Mode, this circuit remains active.

In Sleep Mode, the power supply to the whole MCU subsystem is removed. On detection of wake-up event, a system reset is generated and the MCU is reset to default configuration then restart operation as initialized.

The priority for entry to the power-save modes starting from the highest is Sleep Mode, Stop Mode, then Idle Mode. Slow Down Mode can be enabled concurrently with Idle Mode.

7.5.2 Functional Description

This section describes the power-save modes, their operations, and entry and exit. It also describes the respective behavior of TLE984xQX system components.

7.5.2.1 Slow Down Mode

The Slow Down Mode is used to reduce the power consumption by decreasing the internal clock in the device.

The Slow Down Mode is activated by setting the bit SD in SFR PMCON0. The bit field CMCON1.CLKREL is used to select different slow down frequency. The CPU and peripherals are clocked at this lower frequency. The Slow Down Mode is terminated by clearing bit SD.

7.5.2.2 Stop Mode

In the Stop Mode, the NVM is put into NVM shutdown mode (analog and digital except MapRAM shut down). The 5 V (VDDP) power supply to the analog modules ADC and PLL & internal oscillator is not removed. The MCU digital and NVM MapRAM is powered by the 1.5V (VDDC) regulator (0.9 V). All functions of the microcontroller are stopped while the contents of the NVM, on-chip RAM, RAM, and the SFRs are maintained. As for the external ports, all digital pads are still powered.

In Stop Mode, the clock is turned off. Hence, the system cannot be awakened by an interrupt or the Watchdog Timer. It will be awakened only when it receives an external wake-up signal (with or without a following system reset) or with reset by asserting the hard reset pin.

Software requests Stop Mode by setting the bit **PMCON0.PD** to 1. In addition to this Flag the **WFI** or **WFE** instruction has to be executed. When the controller will finish its currently executed interrupt task it will enter the Stop Mode. Figure below shows the required sequence to enter stop mode properly:

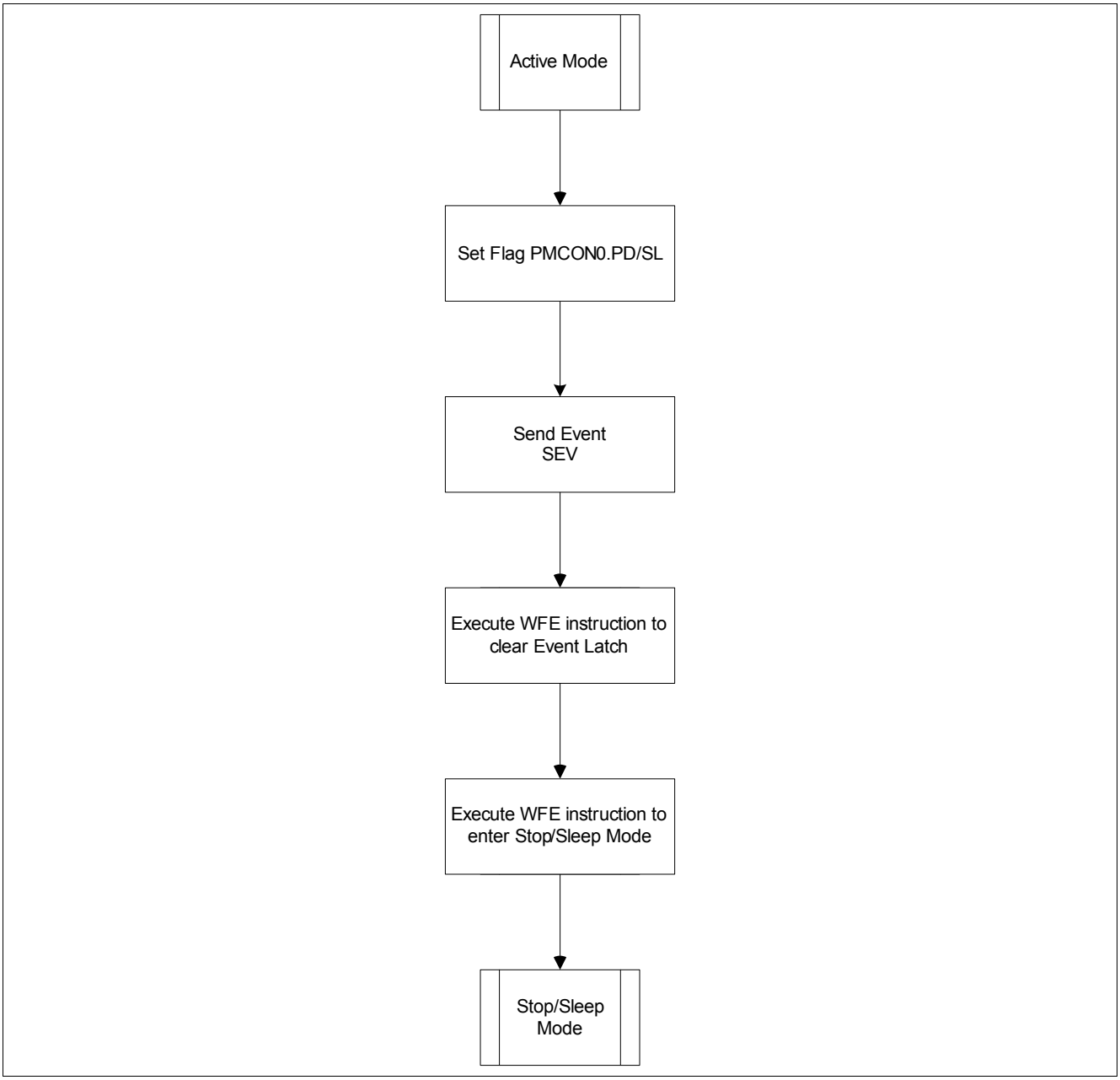

Figure 33 Stop Mode Entry Programming Sequence

Exiting Stop Mode

Stop Mode can be exited by active edge on the enabled wake-up pin(s) or by asserting the hard reset pin.

The wake-up circuitry will perform a sequence of predefined actions such as restore all supply voltages, restore modules to operational mode including the oscillator and PLL. On stable clock per user configuration is restored, peripheral clock gating, CPU clock gating is removed and the CPU starts to run from the instruction following the one that sets the PD bit.

Note that if user has selected the PLL output as system clock (typical usage) but lock status of the PLL cannot be achieved, the device cannot wake up and shall hang in this state until a device reset.

7.5.2.2.1 Usage of ARM Core Low Power Modes for Stop and Sleep Mode

The ARM Core provides two low power modes, which are Sleep and Deep sleep. For stop mode of the system the Deep sleep will be used. To enable the deep sleep mode the System Control Register at address $E000ED10_H$. When the user wants to enter sleep mode it can be done via two different instructions:

- **WFI**
- **WFE**

When the controller enters stop mode via WFI instruction, it executes the lowest prior pending interrupt and after that enters sleep mode. This feature is not recommended to be used for normal operation using stop mode, because the controller would only operate interrupt triggered.

When the WFE instruction is used, the controller starts to operate triggered by an external event. If CPU will be woken up be this external event, it stays in thread mode and continue to execute the code before it entered stop mode.

This is the recommended procedure to enter stop mode.

7.5.2.3 Sleep Mode

In the Sleep Mode, the supply to the whole MCU subsystem including the ADC, PLL and NVM is removed. The wake-up detection circuitry remains supplied. Only contents of non-volatile memory are retained. As for the external ports, only the wake-up pads are still powered. The supply to ADC pads is removed.

Sleep Mode is always exit with a system reset, which is triggered by active edge on the enabled wake-up pin(s). It is not possible to exit Sleep Mode by asserting the hard reset pin as the digital 5 V pads will not be powered.

Software requests Sleep Mode by setting the bit PMCON0.SL to 1.

Exiting Sleep Mode

Sleep Mode can only be exited with a system reset, triggered by active edge on the enabled wake-up pin(s).

Notes

1. *Ready for first LIN message at > 400 µs (assume 64 KByte MapRAM init): start-up boot, NVM pumps ramp up including SFR and MapRAM init.*
2. *To avoid power switching, dedicated VREGs are provided for necessary power domains.*

7.5.3 Register Description

Power Mode Control Register 0

SCU_PMCON0	Offset	Reset Value
Power Mode Control Register 0	040_H	see Table 58

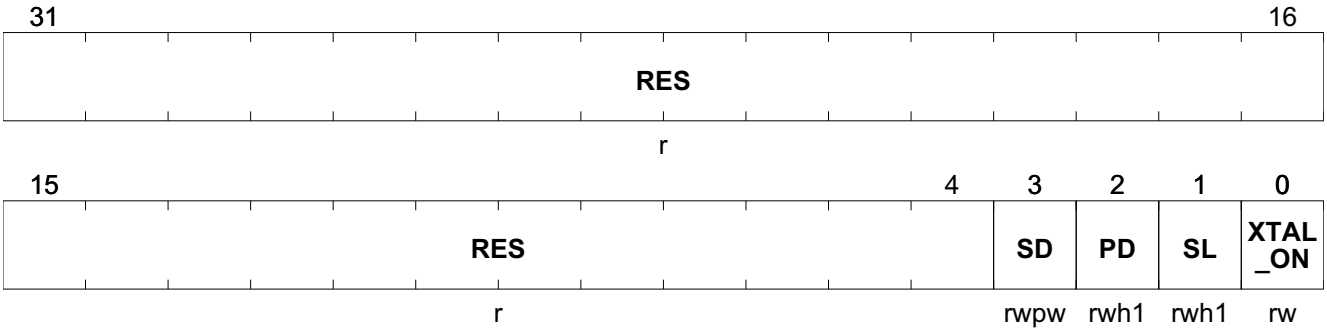

Field	Bits	Type	Description
RES	31:4	r	**Reserved** Returns 0 if read; should be written with 0.
SD	3	rwpw	**Slow Down Mode Enable. Active High.** Setting this bit will cause the chip to go into slow down mode. Reset by user. *Note: This is a PASSWD protected bit. When the protection scheme (see **Chapter 7.14**) is activated (default), this bit cannot be written directly.*
PD	2	rwh1	**Power Down Mode (Stop mode) Enable. Active High.** Setting this bit will cause the chip to go into a Power Down mode. Reset by wake-up circuit. *Note: This is a PASSWD protected bit. When the protection scheme (see **Chapter 7.14**) is activated (default), this bit cannot be written directly.*
SL	1	rwh1	**Sleep Mode Enable. Active High.** Setting this bit will cause the chip to go into Sleep Mode. Reset by wake-up circuit. *Note: This is a PASSWD protected bit. When the protection scheme (see **Chapter 7.14**) is activated (default), this bit cannot be written directly.*

Field	Bits	Type	Description
XTAL_ON	0	rw	**OSC_HP Operation in Power Down Mode** This provides user the option for reduced power consumption in the Power Down mode. It must be noted that the startup time of OSC_HP can be in the range of some milliseconds. Alternatively for fast wake-up from Power Down mode while avoiding this power consumption, the user can selectively enable internal oscillator as clock source and disable OSC_HP before enable Power Down mode. 0_B OSC_HP (XTAL) will be put to Power Down mode by hardware in power save mode. 1_B OSC_HP (XTAL) continues to operate in Power Down mode, if enabled by **SCU_OSC_CON**.XPD.

Table 58 RESET of SCU_PMCON0

Register Reset Type	Reset Values	Reset Short Name	Reset Mode	Note
RESET_TYPE_3	00000000_H	RESET_TYPE_3		

7.6 Interrupt Management

This section describes the management of interrupts by the system control unit.

7.6.1 Overview

The Interrupt Management sub-module in the SCU controls the non-core-generated interrupt requests to the core. The core has one non-maskable interrupt (NMI) node and total 24 maskable interrupt nodes. **Figure 34** shows the block diagram of the Interrupt Management sub-module.

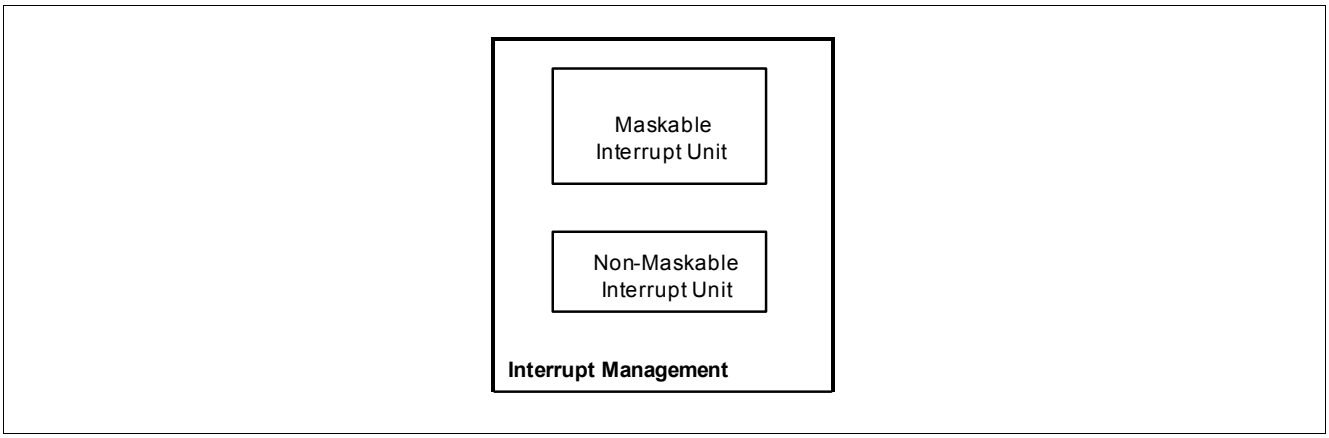

Figure 34 Interrupt Management Block Diagram

The non-maskable interrupt unit controls the NMI requests. Incoming NMI request is not maskable and in this sense, differs from the regular interrupts. In addition, NMI request always has the highest priority to be serviced. In the TLE984xQX, eight different sources can generate an NMI: PLL loss-of-lock, oscillator watchdog event, NVM map error, Memory ECC error, NVM operation complete, Debug Mode user IRAM event and supply prewarning. Some NMI sources can be triggered by one of several events. These NMI sources are ORed to generate an NMI interrupt directly to the core. The triggering NMI sources/events are indicated in the NMI Status Register (NMISR), and in some cases the event flags are located in the peripheral register. The NMI node source control is via the NMI Control Register (NMICON).

There are generally 3 types of maskable inputs into the core: internal, external and extended interrupts. The maskable interrupt unit will generate the respective interrupt node request to the core and will maintain corresponding SCU flags and control. In general, to support all types of peripheral interrupts, an interrupt node of the core may be shared among several interrupt sources.

7.6.1.1 External Interrupts

The generation of interrupt request from an external source by edge detection in SCU is shown in **Figure 35**. External interrupts can be positive, negative or double edge triggered. Register EXICON0 specifies the active edge for the external interrupt.

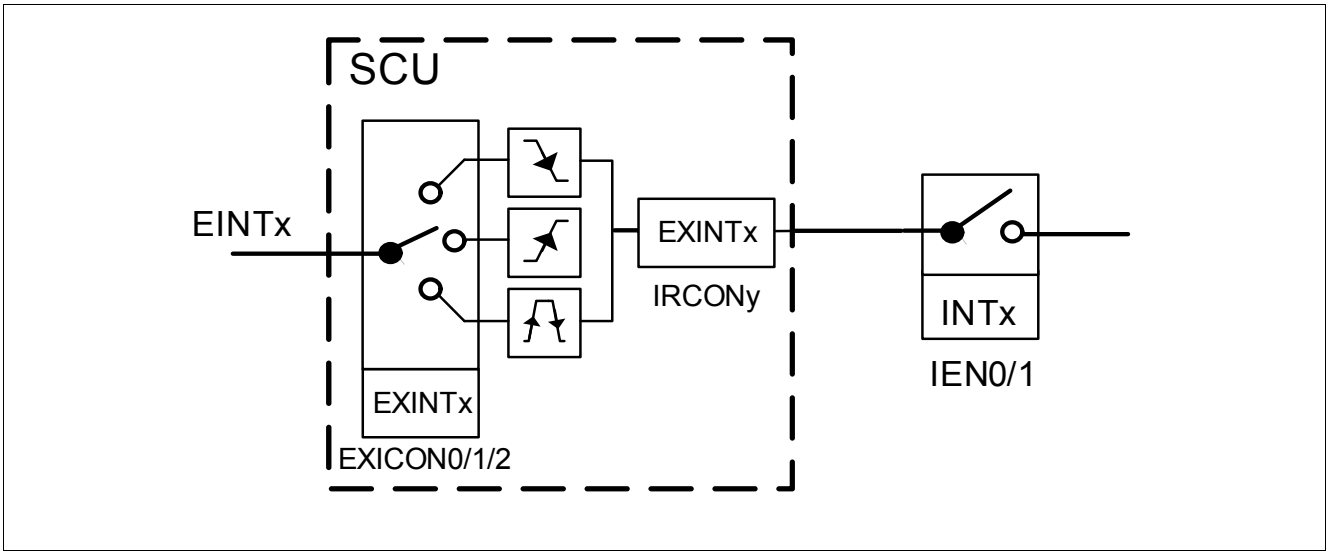

Figure 35 Interrupt Request Generation of External and Peripheral Interrupts

7.6.1.2 Extended Interrupts

Extended interrupts are for non-core on-chip peripherals for core-external trigger of interrupt requests to the core. There are nine such interrupt.

Interrupt signals from such on-chip peripherals are pulse triggered and active for two clock cycles. These interrupt signals belonging to the same interrupt node will be latched as one direct interrupt request to the core. IRCONx (where x = 0-1, 3-4) or peripheral registers hold the interrupt event flags for these extended and external interrupt events. Corresponding bits in the Interrupt Enable Registers (IEN) within the core may block or transfer these interrupt requests to the core interrupt controller. An enabled interrupt request is acknowledged when the core vectors to the interrupt routine. The software routine should clear the interrupt flags in the IRCONx registers.

As there are more peripheral interrupts than interrupt nodes supported by the core, some interrupts are multiplexed to the same interrupt node. Where possible and necessary, critical peripheral interrupts (e.g. SC) have their own dedicated interrupt node.

In addition, user may select one of two interrupt modes (with slightly different interrupt behavior) via the bit **SCU_SYS_STRTUP_STS**.IMODE. Refer to **Chapter 13**, **Interrupt System**.

7.6.2 Interrupt Node Assignment

Table 59 shows the interrupt node assignment for TLE984xQX.

Table 59 NMI

Interrupt Node	Vector Address	Assignment for TLE984xQX
NMI	0000_H	PLL, NVM Operation Complete, CLKWDT, Oscillator Watchdog, NVM map error, ECC error, Pre-Warn SUPP, Pre-Warn TEMP

Table 60 Interrupt Vector Table

Service Request	Node ID	Description
GPT1	0	GPT1 interrupt (T2-T4)
GPT2	1	GPT2 interrupt (T5-T6, CR)
MU	2	MU interrupt / ADC2, VBG interrupt

Table 60 Interrupt Vector Table (cont'd)

Service Request	Node ID	Description
ADC1	3	ADC10 Bit interrupt
CCU0	4	CCU6 node 0 interrupt
CCU1	5	CCU6 node 1 interrupt
CCU2	6	CCU6 node 2 interrupt
CCU3	7	CCU6 node 3 interrupt
SSC1	8	SSC1 interrupt (receive, transmit, error)
SSC2	9	SSC2 interrupt (receive, transmit, error)
UART1	10	UART1 (ASC-LIN) interrupt (receive, transmit), t2, linsync1, LIN
UART2	11	UART2 interrupt (receive, transmit), t21, External interrupt (EINT2)
EXINT0	12	External interrupt (EINT0)
EXINT1	13	External interrupt (EINT1)
WAKE-UP	14	Wake-up interrupt
LS1	17	Low-Side 1 Interrupt
LS2	18	Low-Side 2 Interrupt
HS1	19	High-Side 1 Interrupt
HS2	20	High-Side 2 Interrupt
DU	21	Differential Unit - DPP1 (only TLE9845QX)
MON1-5	22	MON 1-5 interrupt - DPP1
Port 2.x	23	Port 2.x interrupt - DPP1

7.6.3 Interrupt Registers

Interrupt registers are used for interrupt node enable, external interrupt control, interrupt flags and interrupt priority setting.

Table 61 Register Address Space

Module	Base Address	End Address	Note
SCU	50005000_H	$50005FFF_H$	SCU

Table 62 Register Overview

Register Short Name	Register Long Name	Offset Address	Reset Value
Interrupt Registers, Interrupt Node Enable Registers			
SCU_IEN0	Interrupt Enable Register 0	$01C_H$	$0000\ 0000_H$
SCU_VTOR	Vector Table Reallocation Register	020_H	$0000\ 0000_H$
SCU_NMICON	NMI Control Register	024_H	$0000\ 0000_H$
Interrupt Registers, External Interrupt Control Registers			
SCU_EXICON0	External Interrupt Control Register 0	028_H	$0000\ 0030_H$
SCU_EXICON1	External Interrupt Control Register 1	$02C_H$	$0000\ 0000_H$
SCU_WAKECON	Wakeup Interrupt Control Register	078_H	$0000\ 0000_H$
Interrupt Registers, Interrupt Flag Registers (this register are just doubled for register generation)			
SCU_IRCON0	Interrupt Request Register 0	004_H	$0000\ 0000_H$
SCU_IRCON0CLR	Interrupt Request Clear Register 0	178_H	$0000\ 0000_H$
SCU_IRCON1	Interrupt Request Register 1	008_H	$0000\ 0000_H$
SCU_IRCON1CLR	Interrupt Request Clear Register 1	$17C_H$	$0000\ 0000_H$
SCU_IRCON2	Interrupt Request Register 2	$00C_H$	$0000\ 0000_H$
SCU_IRCON2CLR	Interrupt Request Clear Register 2	190_H	$0000\ 0000_H$
SCU_IRCON3	Interrupt Request Register 3	010_H	$0000\ 0000_H$
SCU_IRCON3CLR	Interrupt Request Clear Register 3	194_H	$0000\ 0000_H$
SCU_IRCON4	Interrupt Request Register 4	014_H	$0000\ 0000_H$
SCU_IRCON4CLR	Interrupt Request Clear Register 4	198_H	$0000\ 0000_H$
SCU_IRCON5	Interrupt Request Register 5	$07C_H$	$0000\ 0000_H$
SCU_IRCON5CLR	Interrupt Request Clear Register 5	$19C_H$	$0000\ 0000_H$
SCU_NMISR	NMI Status Register	018_H	$0000\ 0000_H$
SCU_NMISRCLR	NMI Status Clear Register	000_H	$0000\ 0000_H$
SCU_GPT12IRC	Timer and Counter Control/Status Register	160_H	$0000\ 0000_H$
SCU_GPT12ICLR	Timer and Counter Control/Status Clear Register	180_H	$0000\ 0000_H$

The registers are addressed wordwise.

7.6.3.1 Interrupt Node Enable Registers

Register IEN0 contains the global interrupt masking bit (EA), which can be cleared to block all pending interrupt requests at once.

The NMI interrupt vector is shared by a number of sources, each of which can be enabled or disabled individually via register NMICON.

After reset, the enable bits in IEN0, IEN1 and NMICON are cleared to 0. This implies that all interrupt nodes are disabled by default.

Interrupt Enable Register 0

SCU_IEN0	Offset	Reset Value
Interrupt Enable Register 0	$01C_H$	see Table 63

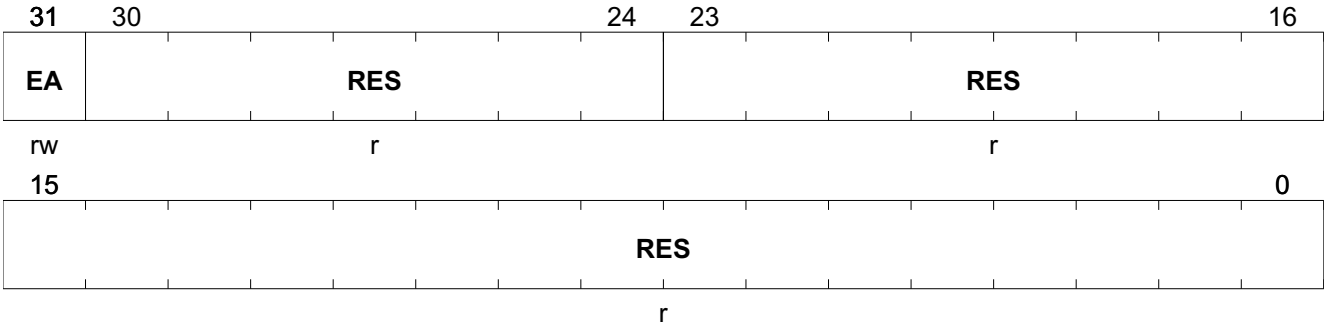

Field	Bits	Type	Description
EA	31	rw	**Global Interrupt Mask** 0_B All pending interrupt requests (except NMI) are blocked from the core. 1_B Pending interrupt requests are not blocked from the core.
RES	30:24	r	**Reserved** Returns 0 if read; should be written with 0.
RES	23:0	r	**Reserved** Returns 0 if read; should be written with 0.

Table 63 RESET of SCU_IEN0

Register Reset Type	Reset Values	Reset Short Name	Reset Mode	Note
RESET_TYPE_4	00000000_H	RESET_TYPE_4		

Vector Table Reallocation Register

SCU_VTOR	Offset	Reset Value
Vector Table Reallocation Register	020_H	see Table 64

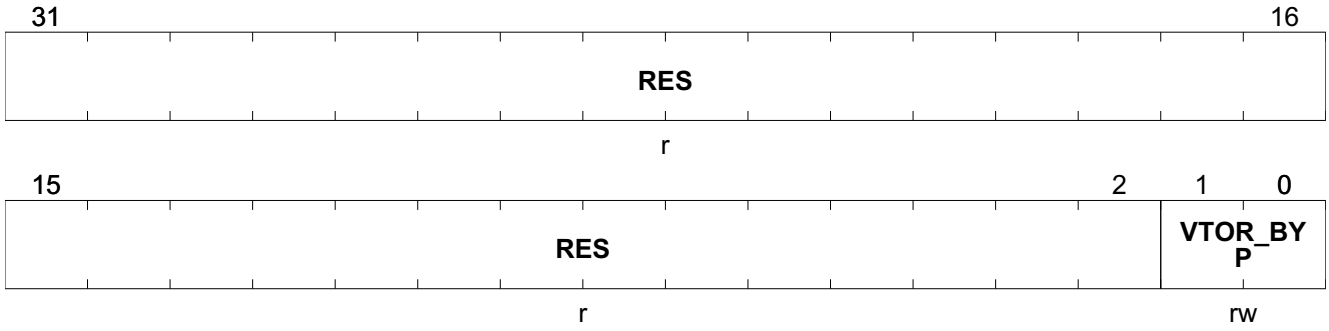

Field	Bits	Type	Description
RES	31:2	r	**Reserved** Returns 0 if read; should be written with 0.
VTOR_BYP	1:0	rw	**Vector Table Bypass Mode** 00_B VTOR is not remapped (ROM) (Start Address: 0x0000000000) 01_B VTOR is remapped to RAM (Start Address: 0x1800000000) 10_B VTOR is remapped to NVM (Start Address: 0x1100000000, begin of Customer BSL Region) 11_B VTOR is remapped to NVM (Start Address: Begin of NVM Linear region after customer BSL region)

Table 64 RESET of SCU_VTOR

Register Reset Type	Reset Values	Reset Short Name	Reset Mode	Note
RESET_TYPE_3	00000000_H	RESET_TYPE_3		

NMI Control Register

SCU_NMICON	Offset	Reset Value
NMI Control Register	024_H	see Table 65

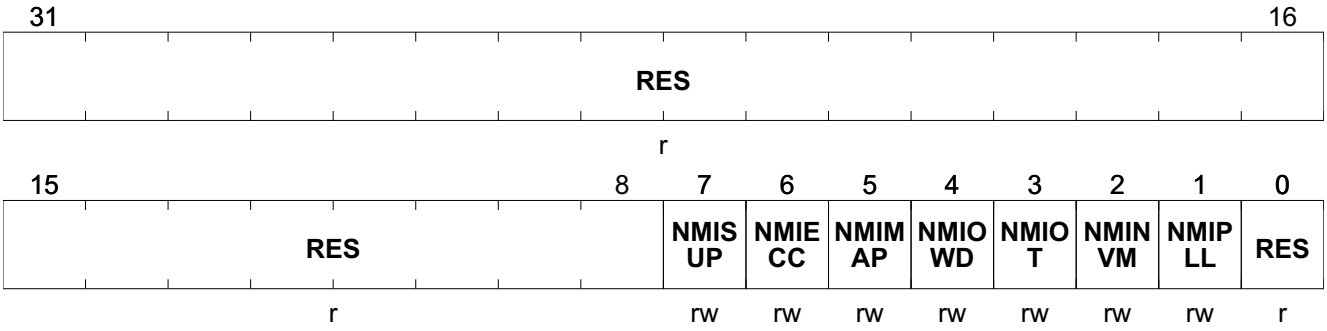

Field	Bits	Type	Description
RES	31:8	r	**Reserved** Returns 0 if read; should be written with 0.
NMISUP	7	rw	**Supply Prewarning NMI Enable** 0_B Supply NMI is disabled. 1_B Supply NMI is enabled.
NMIECC	6	rw	**ECC Error NMI Enable** 0_B ECC Error NMI is disabled. 1_B ECC Error NMI is enabled.
NMIMAP	5	rw	**NVM Map Error NMI Enable** 0_B NVM Map Error NMI is disabled. 1_B NVM Map Error NMI is enabled.
NMIOWD	4	rw	**Oscillator Watchdog NMI Enable** 0_B Oscillator watchdog NMI is disabled. 1_B Oscillator watchdog NMI is enabled.
NMIOT	3	rw	**NMI OT Enable** 0_B NMI OT is disabled. 1_B NMI OT is enabled.
NMINVM	2	rw	**NVM Operation Complete NMI Enable** 0_B NVM operation complete NMI is disabled. 1_B NVM operation complete NMI is enabled.
NMIPLL	1	rw	**PLL Loss of Lock NMI Enable** 0_B PLL Loss of Lock NMI is disabled. 1_B PLL Loss of Lock NMI is enabled.
RES	0	r	**Reserved** Returns 0 if read; should be written with 0.

Table 65 RESET of SCU_NMICON

Register Reset Type	Reset Values	Reset Short Name	Reset Mode	Note
RESET_TYPE_3	00000000_H	RESET_TYPE_3		

7.6.3.2 External Interrupt Control Registers

The external interrupts, EXT_INT[1:0], are driven into the XC8_EPOWER from the ports. External interrupts can be positive, negative or double edge triggered. Register EXICON0 specifies the active edge for the external interrupt. Among the external interrupts, external interrupt 0 and external interrupt 1 can be selected to bypass edge detection in the SCU, for direct feed-through to the core. This signal to the core can be further programmed to either low-level or negative transition activated, by the bits IT0 and IT1 in the TCON register. However for edge detection in SCU, TCON.IT0/1 must be set to falling edge triggered. An active edge event detected in SCU will generate internally two CCLK cycle low pulse for detection by core.

If the external interrupt is positive (negative) edge triggered, the external source must hold the request pin low (high) for at least one CCLK cycle, and then hold it high (low) for at least one CCLK cycle to ensure that the transition is recognized. If edge detection is bypassed for external interrupt 0 and external interrupt 1, the external source must hold the request pin “high” or “low” for at least two CCLK cycles.

External interrupt 2 share the interrupt node with other interrupt sources. Therefore in addition to the corresponding interrupt node enable, external interrupt 2 may be disabled individually, and is disabled by default after reset.

Note: Several external interrupts support alternative input pin, selected via MODPISEL register in the SCU. When switching inputs, the active edge/level trigger select and the level on the associated pins should be considered to prevent unintentional interrupt generation.

External Interrupt Control Register 0

SCU_EXICON0	Offset	Reset Value
External Interrupt Control Register 0	028_H	see Table 66

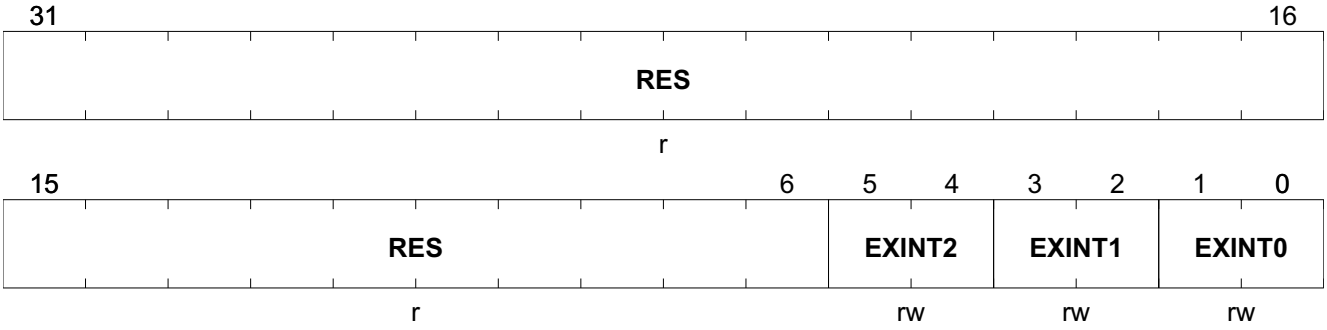

Field	Bits	Type	Description
RES	31:6	r	**Reserved** Returns 0 if read; should be written with 0.
EXINT2	5:4	rw	**External Interrupt 2 Trigger Select** 00_B Interrupt on falling edge. 01_B Interrupt on rising edge. 10_B Interrupt on both rising and falling edge. 11_B Bypass the edge detection in SCU. The input signal directly feeds to the core.

Field	Bits	Type	Description
EXINT1	3:2	rw	**External Interrupt 1 Trigger Select** 00_B Interrupt on falling edge. 01_B Interrupt on rising edge. 10_B Interrupt on both rising and falling edge. 11_B Bypass the edge detection in SCU. The input signal directly feeds to the core.
EXINT0	1:0	rw	**External Interrupt 0 Trigger Select** 00_B Interrupt on falling edge. 01_B Interrupt on rising edge. 10_B Interrupt on both rising and falling edge. 11_B Bypass the edge detection in SCU. The input signal directly feeds to the core.

Table 66 RESET of SCU_EXICON0

Register Reset Type	Reset Values	Reset Short Name	Reset Mode	Note
RESET_TYPE_3	$0000\ 0030_H$	RESET_TYPE_3		

External Interrupt Control Register 1

SCU_EXICON1	Offset	Reset Value
External Interrupt Control Register 1	$02C_H$	see Table 67

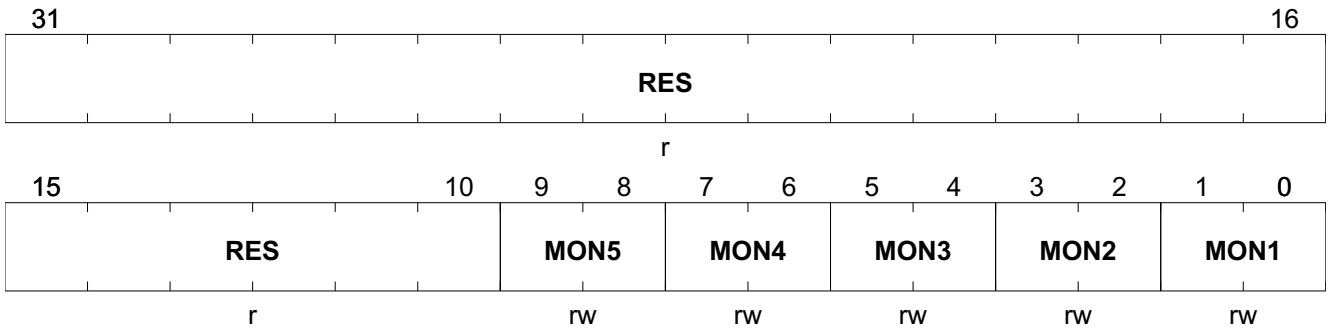

Field	Bits	Type	Description
RES	31:10	r	**Reserved** Returns 0 if read; should be written with 0.
MON5	9:8	rw	**MON5 Input Trigger Select** 00_B external interrupt MON is disabled. 01_B Interrupt on rising edge. 10_B Interrupt on falling edge. 11_B Interrupt on both rising and falling edge.
MON4	7:6	rw	**MON4 Input Trigger Select** 00_B external interrupt MON is disabled. 01_B Interrupt on rising edge. 10_B Interrupt on falling edge. 11_B Interrupt on both rising and falling edge.

Field	Bits	Type	Description
MON3	5:4	rw	**MON3 Input Trigger Select** 00_B external interrupt MON is disabled. 01_B Interrupt on rising edge. 10_B Interrupt on falling edge. 11_B Interrupt on both rising and falling edge.
MON2	3:2	rw	**MON2 Input Trigger Select** 00_B external interrupt MON is disabled. 01_B Interrupt on rising edge. 10_B Interrupt on falling edge. 11_B Interrupt on both rising and falling edge.
MON1	1:0	rw	**MON1 Input Trigger Select** 00_B external interrupt MON is disabled. 01_B Interrupt on rising edge. 10_B Interrupt on falling edge. 11_B Interrupt on both rising and falling edge.

Table 67 RESET of SCU_EXICON1

Register Reset Type	Reset Values	Reset Short Name	Reset Mode	Note
RESET_TYPE_3	$0000\ 0000_H$	RESET_TYPE_3		

Wakeup Interrupt Control Register

SCU_WAKECON	Offset	Reset Value
Wakeup Interrupt Control Register	078_H	see Table 68

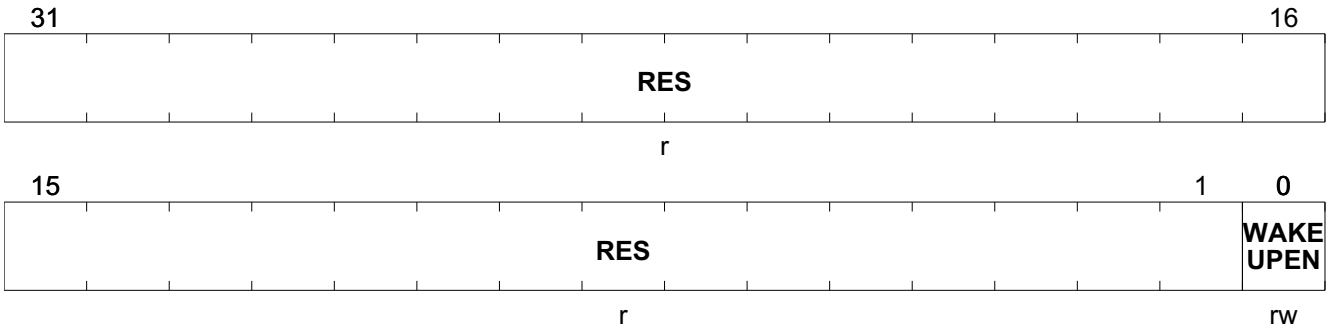

Field	Bits	Type	Description
RES	31:1	r	**Reserved** Returns 0 if read; should be written with 0.
WAKEUPEN	0	rw	**Wakeup Interrupt Enable** 0_B wakeup interrupt is disabled. 1_B wakeup interrupt is enabled.

Table 68 RESET of SCU_WAKECON

Register Reset Type	Reset Values	Reset Short Name	Reset Mode	Note
RESET_TYPE_3	$0000\ 0000_H$	RESET_TYPE_3		

7.6.3.3 Interrupt Flag Registers (this register are just doubled for register generation)

The interrupt flags for the different interrupt sources are located in several special function registers. This section describes the interrupt flags located in system registers or external interrupts belonging to system. Other interrupt flags located in respective module registers are described in the specific module chapter. For a complete listing of the interrupt flags and their assignment to SFRs, refer to **Table 167**.

In case of software and hardware access to a flag bit at the same time, hardware will have higher priority.

Interrupt Request Register 0

SCU_IRCON0	Offset	Reset Value
Interrupt Request Register 0	004_H	see Table 69

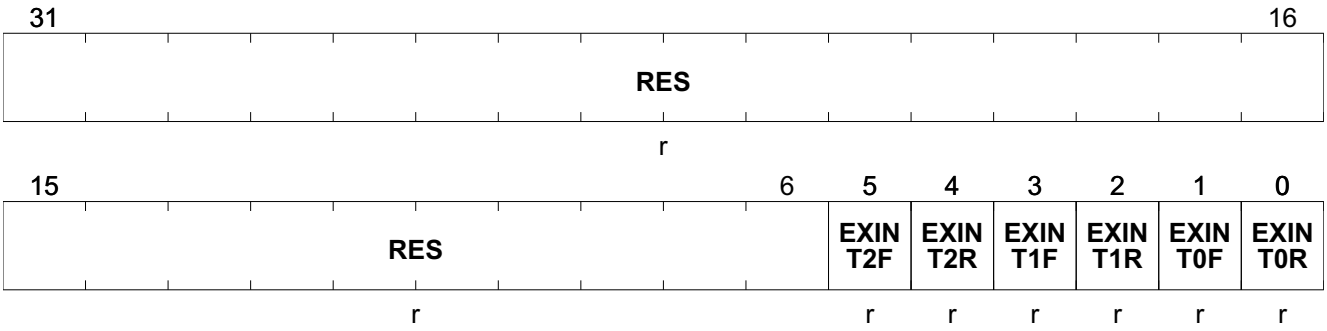

Field	Bits	Type	Description
RES	31:6	r	**Reserved** Returns 0 if read; should be written with 0.
EXINT2F	5	r	**Interrupt Flag for External Interrupt 2x on falling edge** This bit is set by hardware and can only be cleared by software. 0_B Interrupt on falling edge event has not occurred. 1_B Interrupt on falling edge event has occurred.
EXINT2R	4	r	**Interrupt Flag for External Interrupt 2x on rising edge** This bit is set by hardware and can only be cleared by software. 0_B Interrupt on rising edge event has not occurred. 1_B Interrupt on rising edge event has occurred.
EXINT1F	3	r	**Interrupt Flag for External Interrupt 1x on falling edge** This bit is set by hardware and can only be cleared by software. 0_B Interrupt on falling edge event has not occurred. 1_B Interrupt on falling edge event has occurred.
EXINT1R	2	r	**Interrupt Flag for External Interrupt 1x on rising edge** This bit is set by hardware and can only be cleared by software. 0_B Interrupt on rising edge event has not occurred. 1_B Interrupt on rising edge event has occurred.

Field	Bits	Type	Description
EXINT0F	1	r	**Interrupt Flag for External Interrupt 0x on falling edge** This bit is set by hardware and can only be cleared by software. 0_B Interrupt on falling edge event has not occurred. 1_B Interrupt on falling edge event has occurred.
EXINT0R	0	r	**Interrupt Flag for External Interrupt 0x on rising edge** This bit is set by hardware and can only be cleared by software. 0_B Interrupt on rising edge event has not occurred. 1_B Interrupt on rising edge event has occurred.

Table 69 RESET of SCU_IRCON0

Register Reset Type	Reset Values	Reset Short Name	Reset Mode	Note
RESET_TYPE_3	$0000\ 0000_H$	RESET_TYPE_3		

Interrupt Request Register 0 Clear

SCU_IRCON0CLR	Offset	Reset Value
Interrupt Request 0 Clear Register	178_H	see Table 70

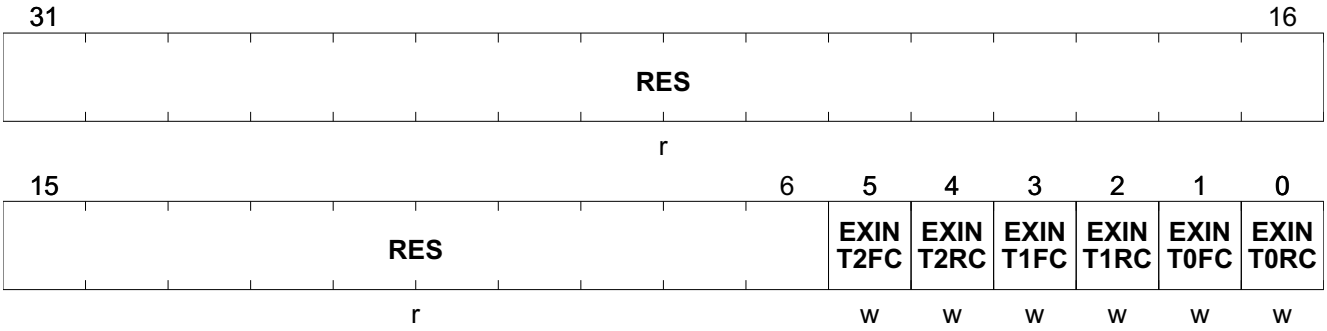

Field	Bits	Type	Description
RES	31:6	r	**Reserved** Returns 0 if read; should be written with 0.
EXINT2FC	5	w	**Interrupt Flag for External Interrupt 2x on falling edge** This bit is set by hardware and can only be cleared by software. 0_B Interrupt event is not cleared. 1_B Interrupt event is cleared
EXINT2RC	4	w	**Interrupt Flag for External Interrupt 2x on rising edge** This bit is set by hardware and can only be cleared by software. 0_B Interrupt event is not cleared. 1_B Interrupt event is cleared

Field	Bits	Type	Description
EXINT1FC	3	w	**Interrupt Flag for External Interrupt 1x on falling edge** This bit is set by hardware and can only be cleared by software. 0_B Interrupt event is not cleared. 1_B Interrupt event is cleared
EXINT1RC	2	w	**Interrupt Flag for External Interrupt 1x on rising edge** This bit is set by hardware and can only be cleared by software. 0_B Interrupt event is not cleared. 1_B Interrupt event is cleared
EXINT0FC	1	w	**Interrupt Flag for External Interrupt 0x on falling edge** This bit is set by hardware and can only be cleared by software. 0_B Interrupt event is not cleared. 1_B Interrupt event is cleared
EXINT0RC	0	w	**Interrupt Flag for External Interrupt 0x on rising edge** This bit is set by hardware and can only be cleared by software. 0_B Interrupt event is not cleared. 1_B Interrupt event is cleared

Table 70 RESET of SCU_IRCON0CLR

Register Reset Type	Reset Values	Reset Short Name	Reset Mode	Note
RESET_TYPE_3	0000 0000_H	RESET_TYPE_3		

Interrupt Request Register 1

SCU_IRCON1	Offset	Reset Value
Interrupt Request Register 1	008_H	see Table 71

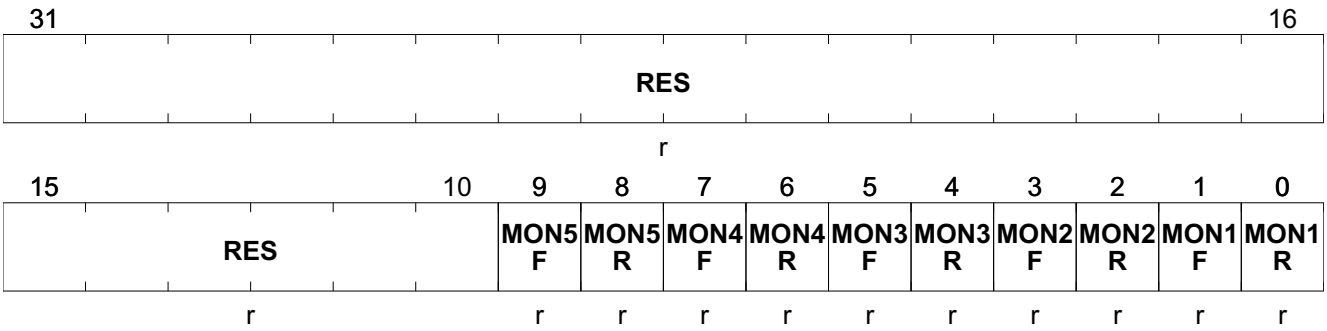

Field	Bits	Type	Description
RES	31:10	r	**Reserved** Returns 0 if read; should be written with 0.

Field	Bits	Type	Description
MON5F	9	r	**Interrupt Flag for MON5x on falling edge** This bit is set by hardware and can only be cleared by software. 0_B Interrupt on falling edge event has not occurred. 1_B Interrupt on falling edge event has occurred.
MON5R	8	r	**Interrupt Flag for MON5x on rising edge** This bit is set by hardware and can only be cleared by software. 0_B Interrupt on rising edge event has not occurred. 1_B Interrupt on rising edge event has occurred.
MON4F	7	r	**Interrupt Flag for MON4x on falling edge** This bit is set by hardware and can only be cleared by software. 0_B Interrupt on falling edge event has not occurred. 1_B Interrupt on falling edge event has occurred.
MON4R	6	r	**Interrupt Flag for MON4x on rising edge** This bit is set by hardware and can only be cleared by software. 0_B Interrupt on rising edge event has not occurred. 1_B Interrupt on rising edge event has occurred.
MON3F	5	r	**Interrupt Flag for MON3x on falling edge** This bit is set by hardware and can only be cleared by software. 0_B Interrupt on falling edge event has not occurred. 1_B Interrupt on falling edge event has occurred.
MON3R	4	r	**Interrupt Flag for MON3x on rising edge** This bit is set by hardware and can only be cleared by software. 0_B Interrupt on rising edge event has not occurred. 1_B Interrupt on rising edge event has occurred.
MON2F	3	r	**Interrupt Flag for MON2x on falling edge** This bit is set by hardware and can only be cleared by software. 0_B Interrupt on falling edge event has not occurred. 1_B Interrupt on falling edge event has occurred.
MON2R	2	r	**Interrupt Flag for MON2x on rising edge** This bit is set by hardware and can only be cleared by software. 0_B Interrupt on rising edge event has not occurred. 1_B Interrupt on rising edge event has occurred.
MON1F	1	r	**Interrupt Flag for MON1x on falling edge** This bit is set by hardware and can only be cleared by software. 0_B Interrupt on falling edge event has not occurred. 1_B Interrupt on falling edge event has occurred.

Field	Bits	Type	Description
MON1R	0	r	**Interrupt Flag for MON1x on rising edge** This bit is set by hardware and can only be cleared by software. 0_B Interrupt on rising edge event has not occurred. 1_B Interrupt on rising edge event has occurred.

Table 71 RESET of SCU_IRCON1

Register Reset Type	Reset Values	Reset Short Name	Reset Mode	Note
RESET_TYPE_3	$0000\ 0000_H$	RESET_TYPE_3		

Interrupt Request Register 1 Clear

SCU_IRCON1CLR	Offset	Reset Value
Interrupt Request 1 Clear Register	$17C_H$	see Table 72

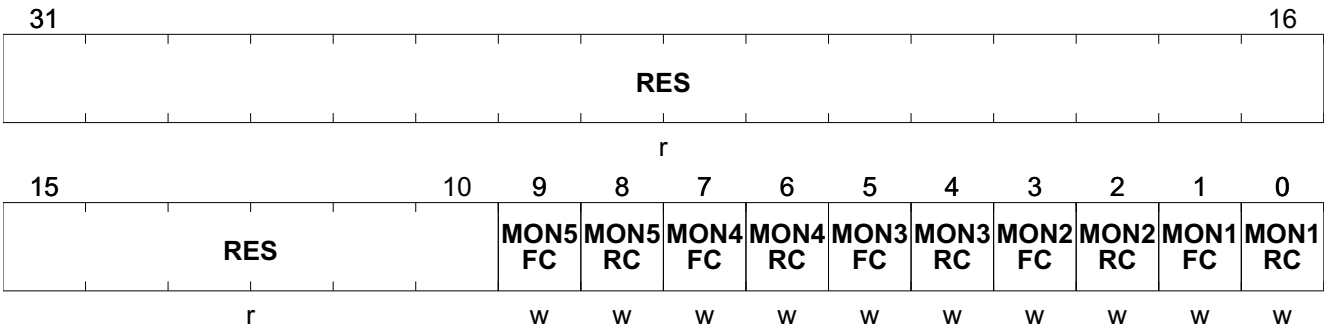

Field	Bits	Type	Description
RES	31:10	r	**Reserved** Returns 0 if read; should be written with 0.
MON5FC	9	w	**Interrupt Flag for MON5x on falling edge** This bit is set by hardware and can only be cleared by software. 0_B Interrupt event is not cleared. 1_B Interrupt event is cleared
MON5RC	8	w	**Interrupt Flag for MON5x on rising edge** This bit is set by hardware and can only be cleared by software. 0_B Interrupt event is not cleared. 1_B Interrupt event is cleared.
MON4FC	7	w	**Interrupt Flag for MON4x on falling edge** This bit is set by hardware and can only be cleared by software. 0_B Interrupt event is not cleared. 1_B Interrupt event is cleared

Field	Bits	Type	Description
MON4RC	6	w	**Interrupt Flag for MON4x on rising edge** This bit is set by hardware and can only be cleared by software. 0_B Interrupt event is not cleared. 1_B Interrupt event is cleared.
MON3FC	5	w	**Interrupt Flag for MON3x on falling edge** This bit is set by hardware and can only be cleared by software. 0_B Interrupt event is not cleared. 1_B Interrupt event is cleared
MON3RC	4	w	**Interrupt Flag for MON3x on rising edge** This bit is set by hardware and can only be cleared by software. 0_B Interrupt event is not cleared. 1_B Interrupt event is cleared
MON2FC	3	w	**Interrupt Flag for MON2x on falling edge** This bit is set by hardware and can only be cleared by software. 0_B Interrupt event is not cleared. 1_B Interrupt event is cleared
MON2RC	2	w	**Interrupt Flag for MON2x on rising edge** This bit is set by hardware and can only be cleared by software. 0_B Interrupt event is not cleared. 1_B Interrupt event is cleared
MON1FC	1	w	**Interrupt Flag for MON1x on falling edge** This bit is set by hardware and can only be cleared by software. 0_B Interrupt event is not cleared. 1_B Interrupt event is cleared
MON1RC	0	w	**Interrupt Flag for MON1x on rising edge** This bit is set by hardware and can only be cleared by software. 0_B Interrupt event is not cleared. 1_B Interrupt event is cleared

Table 72 RESET of SCU_IRCON1CLR

Register Reset Type	Reset Values	Reset Short Name	Reset Mode	Note
RESET_TYPE_3	$0000\ 0000_H$	RESET_TYPE_3		

Interrupt Request Register 2

SCU_IRCON2	Offset	Reset Value
Interrupt Request Register 2	$00C_H$	see Table 73

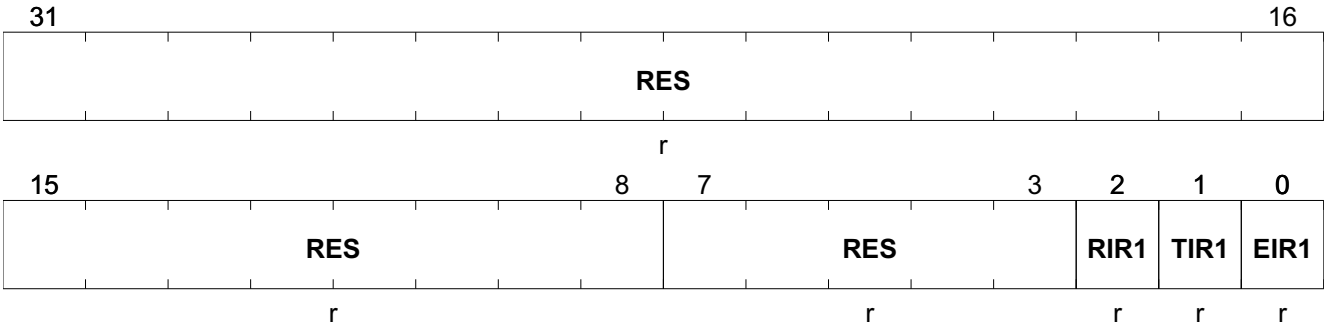

Field	Bits	Type	Description
RES	31:8	r	**Reserved** Returns 0 if read; should be written with 0.
RES	7:3	r	**Reserved** Returns 0 if read; should be written with 0.
RIR1	2	r	**Receive Interrupt Flag for SSC1** This bit is set by hardware and can only be cleared by software. 0_B Interrupt event has not occurred. 1_B Interrupt event has occurred.
TIR1	1	r	**Transmit Interrupt Flag for SSC1** This bit is set by hardware and can only be cleared by software. 0_B Interrupt event has not occurred. 1_B Interrupt event has occurred.
EIR1	0	r	**Error Interrupt Flag for SSC1** This bit is set by hardware and can only be cleared by software. 0_B Interrupt event has not occurred. 1_B Interrupt event has occurred.

Table 73 RESET of SCU_IRCON2

Register Reset Type	Reset Values	Reset Short Name	Reset Mode	Note
RESET_TYPE_3	$0000\ 0000_H$	RESET_TYPE_3		

Interrupt Request Register 2 Clear

SCU_IRCON2CLR	Offset	Reset Value
Interrupt Request 2 Clear Register	190_H	see Table 74

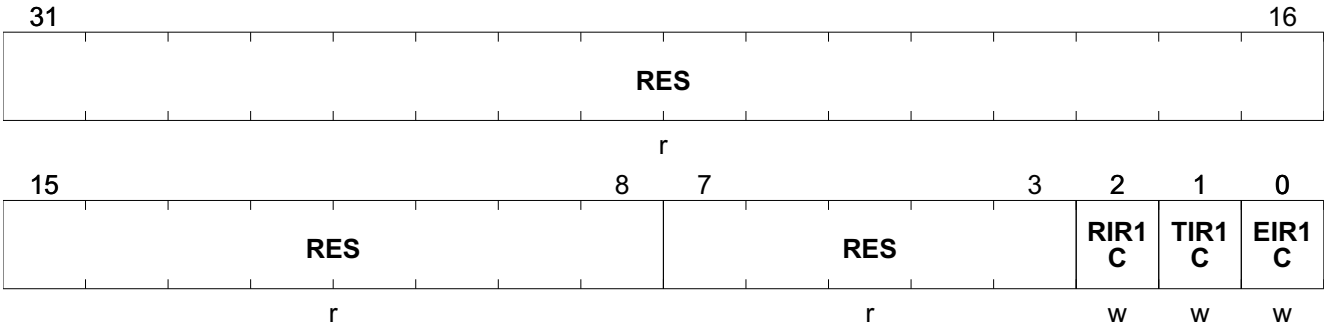

Field	Bits	Type	Description
RES	31:8	r	**Reserved** Returns 0 if read; should be written with 0.
RES	7:3	r	**Reserved** Returns 0 if read; should be written with 0.
RIR1C	2	w	**Receive Interrupt Flag for SSC1** This bit is set by hardware and can only be cleared by software. 0_B Interrupt event is not cleared. 1_B Interrupt event is cleared.
TIR1C	1	w	**Transmit Interrupt Flag for SSC1** This bit is set by hardware and can only be cleared by software. 0_B Interrupt event is not cleared. 1_B Interrupt event is cleared.
EIR1C	0	w	**Error Interrupt Flag for SSC1** This bit is set by hardware and can only be cleared by software. 0_B Interrupt event is not cleared. 1_B Interrupt event is cleared.

Table 74 RESET of SCU_IRCON2CLR

Register Reset Type	Reset Values	Reset Short Name	Reset Mode	Note
RESET_TYPE_3	$0000\ 0000_H$	RESET_TYPE_3		

Interrupt Request Register 3

SCU_IRCON3	Offset	Reset Value
Interrupt Request Register 3	010_H	see Table 75

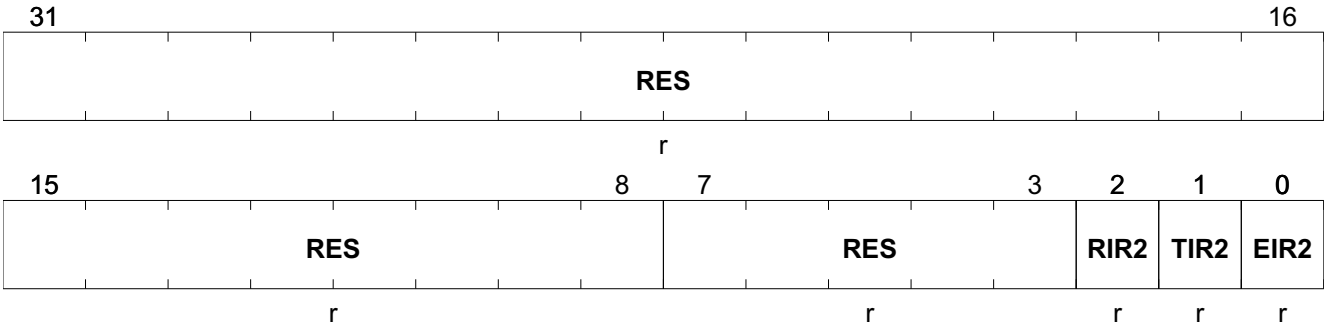

Field	Bits	Type	Description
RES	31:8	r	**Reserved** Returns 0 if read; should be written with 0.
RES	7:3	r	**Reserved** Returns 0 if read; should be written with 0.
RIR2	2	r	**Receive Interrupt Flag for SSC2** This bit is set by hardware and can only be cleared by software. 0_B Interrupt event has not occurred. 1_B Interrupt event has occurred.
TIR2	1	r	**Transmit Interrupt Flag for SSC2** This bit is set by hardware and can only be cleared by software. 0_B Interrupt event has not occurred. 1_B Interrupt event has occurred.
EIR2	0	r	**Error Interrupt Flag for SSC2** This bit is set by hardware and can only be cleared by software. 0_B Interrupt event has not occurred. 1_B Interrupt event has occurred.

Table 75 RESET of SCU_IRCON3

Register Reset Type	Reset Values	Reset Short Name	Reset Mode	Note
RESET_TYPE_3	$0000\ 0000_H$	RESET_TYPE_3		

Interrupt Request Register 3 Clear

SCU_IRCON3CLR	Offset	Reset Value
Interrupt Request 3 Clear Register	194_H	see Table 76

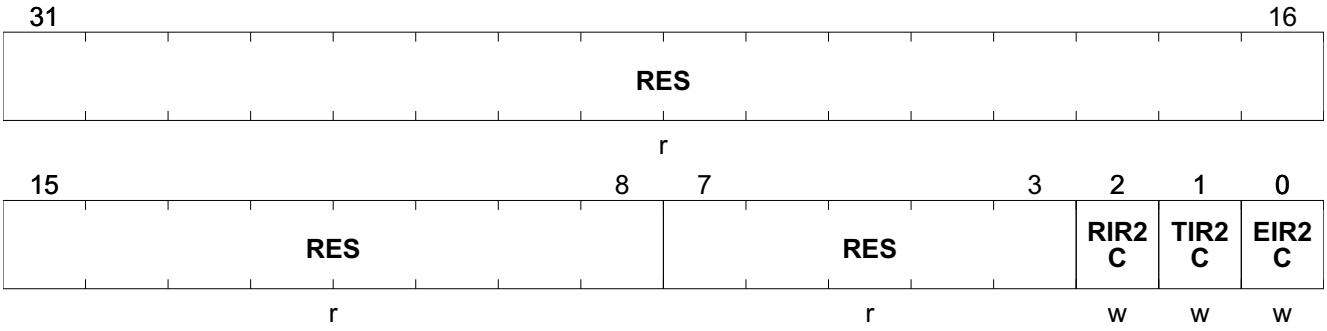

Field	Bits	Type	Description
RES	31:8	r	**Reserved** Returns 0 if read; should be written with 0.
RES	7:3	r	**Reserved** Returns 0 if read; should be written with 0.
RIR2C	2	w	**Receive Interrupt Flag for SSC2** This bit is set by hardware and can only be cleared by software. 0_B Interrupt event is not cleared. 1_B Interrupt event is cleared.
TIR2C	1	w	**Transmit Interrupt Flag for SSC2** This bit is set by hardware and can only be cleared by software. 0_B Interrupt event is not cleared. 1_B Interrupt event is cleared.
EIR2C	0	w	**Error Interrupt Flag for SSC2** This bit is set by hardware and can only be cleared by software. 0_B Interrupt event is not cleared. 1_B Interrupt event is cleared.

Table 76 RESET of SCU_IRCON3CLR

Register Reset Type	Reset Values	Reset Short Name	Reset Mode	Note
RESET_TYPE_3	$0000\ 0000_H$	RESET_TYPE_3		

Interrupt Request Register 4

SCU_IRCON4	Offset	Reset Value
Interrupt Request Register 4	014_H	see Table 77

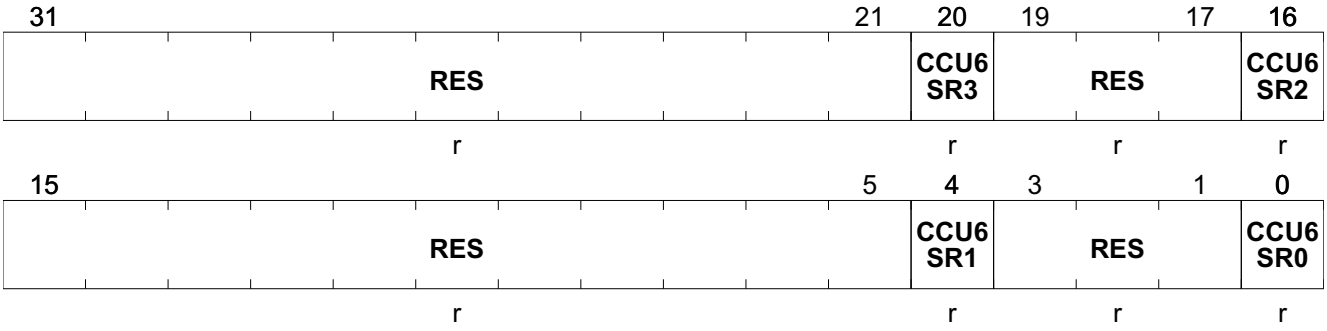

Field	Bits	Type	Description
RES	31:21	r	**Reserved** Returns 0 if read; should be written with 0.
CCU6SR3	20	r	**Interrupt Flag 3 for CCU6** This bit is set by hardware and can only be cleared by software. 0_B Interrupt event has not occurred. 1_B Interrupt event has occurred.
RES	19:17	r	**Reserved** Returns 0 if read; should be written with 0.
CCU6SR2	16	r	**Interrupt Flag 2 for CCU6** This bit is set by hardware and can only be cleared by software. 0_B Interrupt event has not occurred. 1_B Interrupt event has occurred.
RES	15:5	r	**Reserved** Returns 0 if read; should be written with 0.
CCU6SR1	4	r	**Interrupt Flag 1 for CCU6** This bit is set by hardware and can only be cleared by software. 0_B Interrupt event has not occurred. 1_B Interrupt event has occurred.
RES	3:1	r	**Reserved** Returns 0 if read; should be written with 0.
CCU6SR0	0	r	**Interrupt Flag 0 for CCU6** This bit is set by hardware and can only be cleared by software. 0_B Interrupt event has not occurred. 1_B Interrupt event has occurred.

Table 77 RESET of SCU_IRCON4

Register Reset Type	Reset Values	Reset Short Name	Reset Mode	Note
RESET_TYPE_3	$0000\ 0000_H$	RESET_TYPE_3		

Interrupt Request Register 4 Clear

SCU_IRCON4CLR	Offset	Reset Value
Interrupt Request 4 Clear Register	198_H	see Table 78

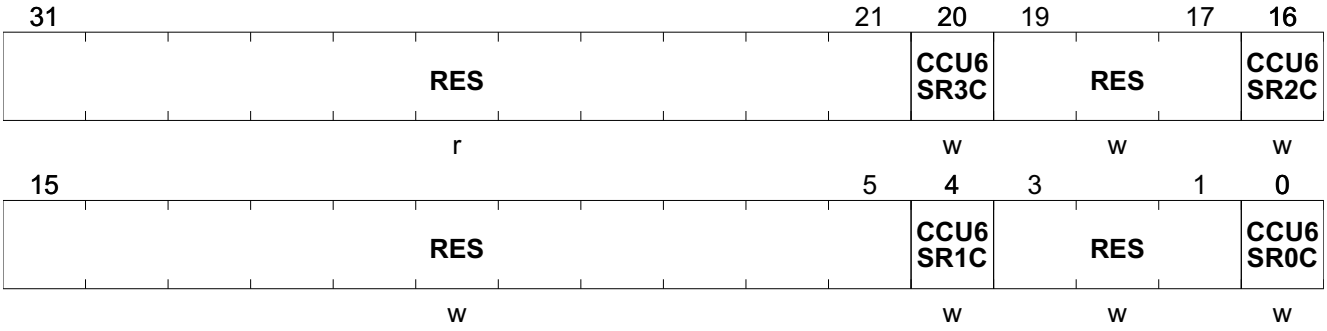

Field	Bits	Type	Description
RES	31:21	r	**Reserved** Returns 0 if read; should be written with 0.
CCU6SR3C	20	w	**Interrupt Flag 1 for CCU6** This bit is set by hardware and can only be cleared by software. 0_B Interrupt event is not cleared 1_B Interrupt event is cleared
RES	19:17	w	**Reserved** Returns 0 if read; should be written with 0.
CCU6SR2C	16	w	**Interrupt Flag 1 for CCU6** This bit is set by hardware and can only be cleared by software. 0_B Interrupt event is not cleared 1_B Interrupt event is cleared
RES	15:5	w	**Reserved** Returns 0 if read; should be written with 0.
CCU6SR1C	4	w	**Interrupt Flag 1 for CCU6** This bit is set by hardware and can only be cleared by software. 0_B Interrupt event is not cleared 1_B Interrupt event is cleared
RES	3:1	w	**Reserved** Returns 0 if read; should be written with 0.
CCU6SR0C	0	w	**Interrupt Flag 1 for CCU6** This bit is set by hardware and can only be cleared by software. 0_B Interrupt event is not cleared 1_B Interrupt event is cleared

Table 78 RESET of SCU_IRCON4CLR

Register Reset Type	Reset Values	Reset Short Name	Reset Mode	Note
RESET_TYPE_3	0000 0000_H	RESET_TYPE_3		

Interrupt Request Register 5

SCU_IRCON5	Offset	Reset Value
Interrupt Request Register 5	$07C_H$	see Table 79

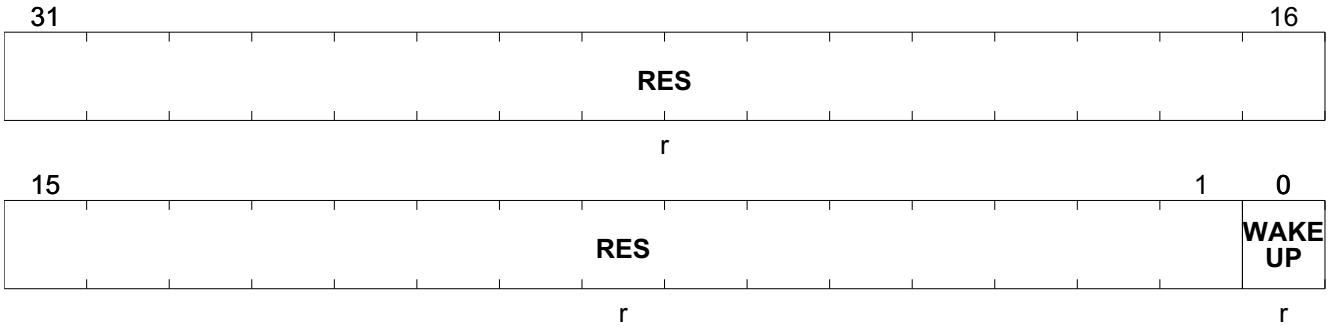

Field	Bits	Type	Description
RES	31:1	r	**Reserved** Returns 0 if read; should be written with 0.
WAKEUP	0	r	**Interrupt Flag for Wakeup** This bit is set by hardware and can only be cleared by software. 0_B Interrupt event has not occurred. 1_B Interrupt event has occurred.

Table 79 RESET of SCU_IRCON5

Register Reset Type	Reset Values	Reset Short Name	Reset Mode	Note
RESET_TYPE_3	$0000\ 0000_H$	RESET_TYPE_3		

Interrupt Request Register 5 Clear

SCU_IRCON5CLR	Offset	Reset Value
Interrupt Request 5 Clear Register	$19C_H$	see Table 80

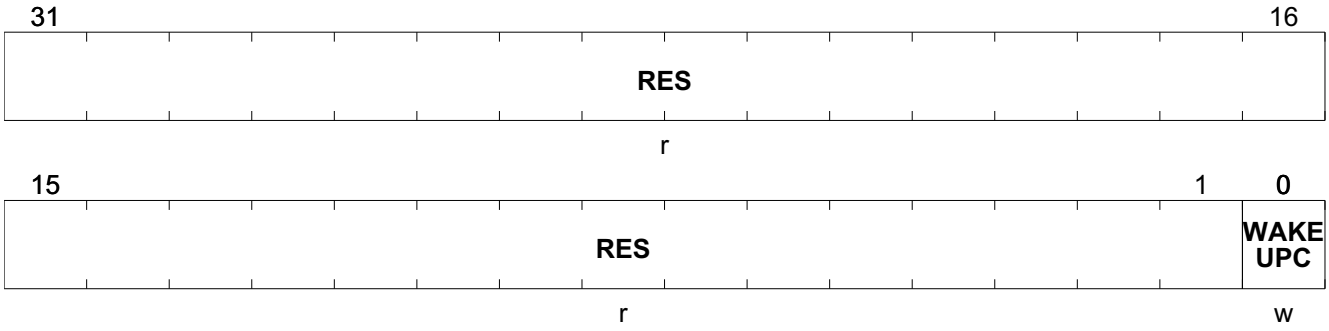

Field	Bits	Type	Description
RES	31:1	r	**Reserved** Returns 0 if read; should be written with 0.
WAKEUPC	0	w	**Clear Flag for Wakeup Interrupt** This bit is set by hardware and can only be cleared by software. 0_B Interrupt event is not cleared 1_B Interrupt event is cleared

Table 80 RESET of SCU_IRCON5CLR

Register Reset Type	Reset Values	Reset Short Name	Reset Mode	Note
RESET_TYPE_3	$0000\ 0000_H$	RESET_TYPE_3		

Timer and Counter Control/Status Register

SCU_GPT12IRC	Offset	Reset Value
Timer and Counter Control/Status Register	160_H	see Table 81

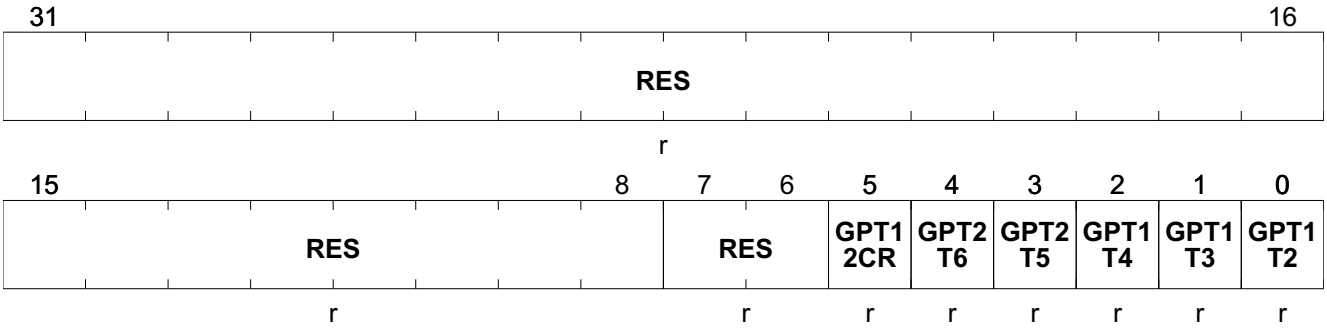

Field	Bits	Type	Description
RES	31:8	r	**Reserved** Returns 0 if read; should be written with 0.
RES	7:6	r	**Reserved** Returns 0 if read; should be written with 0.
GPT12CR	5	r	**GPT 12 Capture Reload Interrupt Status** Capture Reload Event of GPT1 Module Interrupt Status 0_B No Capture Reload Interrupt has occurred. 1_B Capture Reload Interrupt has occurred.
GPT2T6	4	r	**GPT Module 2Timer6 Interrupt Status** Timer 6 of GPT Module Interrupt Status 0_B No Timer 6 Interrupt has occurred. 1_B Timer 6 Interrupt has occurred.
GPT2T5	3	r	**GPT Module 2 Timer5 Interrupt Status** Timer 5 of GPT2 Module Interrupt Status 0_B No Timer 5 Interrupt has occurred. 1_B Timer 5 Interrupt has occurred.
GPT1T4	2	r	**GPT Module 1 Timer4 Interrupt Status** Timer 4 of GPT1 Module Interrupt Status 0_B No Timer 4 Interrupt has occurred. 1_B Timer 4 Interrupt has occurred.
GPT1T3	1	r	**GPT Module 1 Timer3 Interrupt Status** Timer 3 of GPT1 Module Interrupt Status 0_B No Timer 3 Interrupt has occurred. 1_B Timer 3 Interrupt has occurred.
GPT1T2	0	r	**GPT Module 1 Timer 2 Interrupt Status** Timer 2 of GPT1 Module Interrupt Status 0_B No Timer 2 Interrupt has occurred. 1_B Timer 2 Interrupt has occurred.

Table 81 RESET of SCU_GPT12IRC

Register Reset Type	Reset Values	Reset Short Name	Reset Mode	Note
RESET_TYPE_3	$0000\ 0000_H$	RESET_TYPE_3		

Timer and Counter Control/Status Register

SCU_GPT12ICLR	Offset	Reset Value
Timer and Counter Control/Status Clear Register	180_H	see Table 82

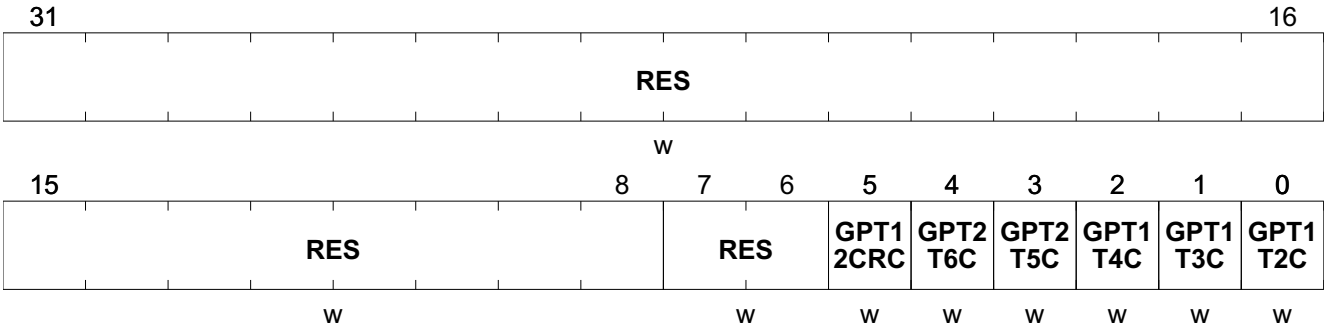

Field	Bits	Type	Description
RES	31:8	w	**Reserved** Returns 0 if read; should be written with 0.
RES	7:6	w	**Reserved** Returns 0 if read; should be written with 0.
GPT12CRC	5	w	**GPT Module 1 Capture Reload Interrupt Status** Capture Reload Event of GPT1 Module Interrupt Status 0_B Interrupt event is not cleared 1_B Interrupt event is cleared
GPT2T6C	4	w	**GPT Module 2 Timer6 Interrupt Status** Timer 6 of GPT Module Interrupt Status 0_B Interrupt event is not cleared 1_B Interrupt event is cleared
GPT2T5C	3	w	**GPT Module 2 Timer5 Interrupt Status** Timer 5 of GPT2 Module Interrupt Status 0_B Interrupt event is not cleared 1_B Interrupt event is cleared
GPT1T4C	2	w	**GPT Module 1 Timer4 Interrupt Status** Timer 4 of GPT1 Module Interrupt Status 0_B Interrupt event is not cleared 1_B Interrupt event is cleared
GPT1T3C	1	w	**GPT Module 1 Timer3 Interrupt Status** Timer 3 of GPT1 Module Interrupt Status 0_B Interrupt event is not cleared 1_B Interrupt event is cleared
GPT1T2C	0	w	**GPT Module 1 Timer 2 Interrupt Status** Timer 2 of GPT1 Module Interrupt Status 0_B Interrupt event is not cleared 1_B Interrupt event is cleared

Table 82 RESET of SCU_GPT12ICLR

Register Reset Type	Reset Values	Reset Short Name	Reset Mode	Note
RESET_TYPE_3	$0000\ 0000_H$	RESET_TYPE_3		

NMI Status Register

Each NMI event and status flag is retained across these resets: 1) WDT reset, 2) soft reset. These include all the flags of NMISR register: FNMIWDT, FNMIPLL, FNMINVM, FNMIOCDS, FNMIOWD, FNMIMAP, and indirectly, FNMIECC and FNMISUP. In the case of NMIs with shared source i.e. watchdog, ECC or supply prewarning NMI, the respective indicator or event flags not located in NMISR are also retained. Refer to Chapter 1.6.5 for identifying the NMI event.

SCU_NMISR	Offset	Reset Value
NMI Status Register	018_H	see Table 83

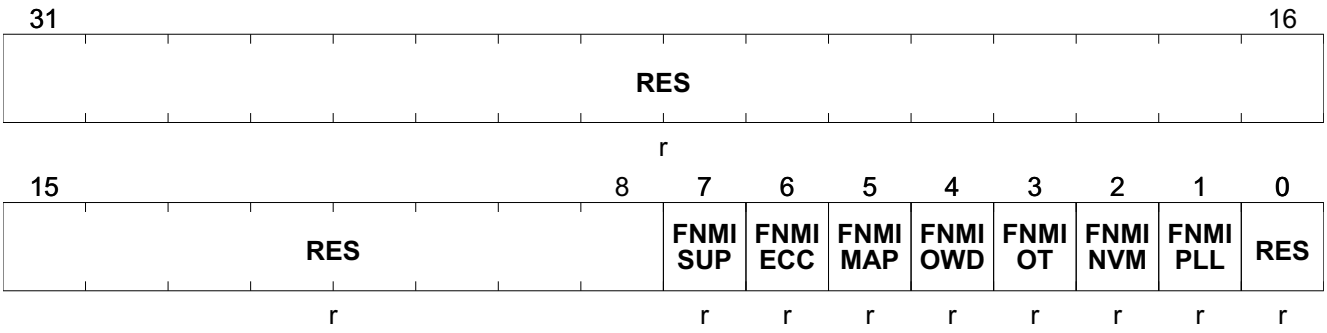

Field	Bits	Type	Description
RES	31:8	r	**Reserved** Returns 0 if read; should be written with 0.
FNMISUP	7	r	**Supply Prewarning NMI Flag** This flag is cleared automatically by hardware when the corresponding event flags are cleared. 0_B No supply prewarning NMI has occurred. 1_B Supply prewarning has occurred.
FNMIECC	6	r	**ECC Error NMI Flag** This flag is cleared automatically by hardware when the corresponding enabled event flags are cleared. 0_B No uncorrectable ECC error has occurred on NVM, XRAM. 1_B Uncorrectable ECC error has occurred on NVM, RAM.
FNMIMAP	5	r	**NVM Map Error NMI Flag** This bit is set by hardware and can only be cleared by software. 0_B No NVM Map Error NMI has occurred. 1_B NVM Map Error has occurred.
FNMIOWD	4	r	**Oscillator Watchdog NMI Flag** This bit is set by hardware and can only be cleared by software. 0_B No oscillator watchdog NMI has occurred. 1_B Oscillator watchdog event has occurred.

Field	Bits	Type	Description
FNMIOT	3	r	**Overtemperature NMI Flag** This bit is set by hardware and can only be cleared by software. As this is a shared NMI source, this flag should be cleared after checking and clearing the corresponding event flags. 0_B No OT NMI has occurred. 1_B OT NMI event has occurred.
FNMINVM	2	r	**NVM Operation Complete NMI Flag** This bit is set by hardware and can only be cleared by software. 0_B No NVM NMI has occurred. 1_B NVM operation complete event has occurred.
FNMIPLL	1	r	**PLL NMI Flag** This bit is set by hardware and can only be cleared by software. 0_B No PLL NMI has occurred. 1_B PLL loss-of-lock to the external crystal has occurred.
RES	0	r	**Reserved** Returns 0 if read; should be written with 0.

Table 83 RESET of SCU_NMISR

Register Reset Type	Reset Values	Reset Short Name	Reset Mode	Note
RESET_TYPE_4	$0000\ 0000_H$	RESET_TYPE_4		

NMI Status Register

Each NMI event and status flag is retained across these resets: 1) WDT reset, 2) soft reset. These include all the flags of NMISR register: FNMIWDT, FNMIPLL, FNMINVM, FNMIOCDS, FNMIOWD, FNMIMAP, and indirectly, FNMIECC and FNMISUP. In the case of NMIs with shared source i.e. watchdog, ECC or supply prewarning NMI, the respective indicator or event flags not located in NMISR are also retained. Refer to Chapter 1.6.5 for identifying the NMI event.

SCU_NMISRCLR	Offset	Reset Value
NMI Status Clear Register	000_H	see Table 84

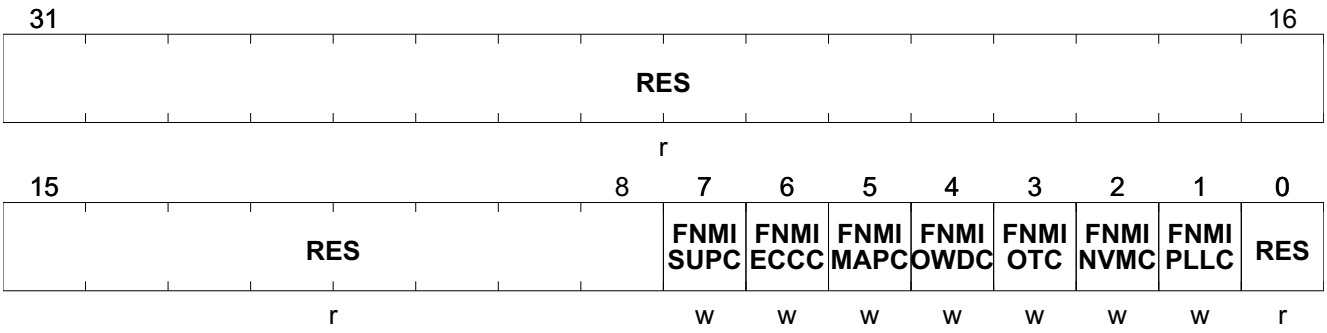

Field	Bits	Type	Description
RES	31:8	r	**Reserved** Returns 0 if read; should be written with 0.
FNMISUPC	7	w	**Supply Prewarning NMI Flag** This flag is cleared automatically by hardware when the corresponding event flags are cleared. *Note: This flag has no effect as it is an logical OR of all Supply Flags and is automatically cleared when the sources are cleared.* 0_B Interrupt event is not cleared 1_B Interrupt event is cleared
FNMIECCC	6	w	**ECC Error NMI Flag** This flag is cleared automatically by hardware when the corresponding enabled event flags are cleared. 0_B Interrupt event is not cleared 1_B Interrupt event is cleared
FNMIMAPC	5	w	**NVM Map Error NMI Flag** This bit is set by hardware and can only be cleared by software. 0_B Interrupt event is not cleared 1_B Interrupt event is cleared
FNMIOWDC	4	w	**Oscillator Watchdog NMI Flag** This bit is set by hardware and can only be cleared by software. 0_B Interrupt event is not cleared 1_B Interrupt event is cleared

Field	Bits	Type	Description
FNMIOTC	3	w	**Overtemperature NMI Flag** This bit is set by hardware and can only be cleared by software. As this is a shared NMI source, this flag should be cleared after checking and clearing the corresponding event flags. 0_B Interrupt event is not cleared 1_B Interrupt event is cleared
FNMINVMC	2	w	**NVM Operation Complete NMI Flag** This bit is set by hardware and can only be cleared by software. 0_B Interrupt event is not cleared 1_B Interrupt event is cleared
FNMIPLLC	1	w	**PLL NMI Flag** This bit is set by hardware and can only be cleared by software. 0_B Interrupt event is not cleared 1_B Interrupt event is cleared
RES	0	r	**Reserved** Returns 0 if read; should be written with 0.

Table 84 RESET of SCU_NMISRCLR

Register Reset Type	Reset Values	Reset Short Name	Reset Mode	Note
RESET_TYPE_3	$0000\ 0000_H$	RESET_TYPE_3		

7.6.4 Interrupt Related Registers

Several interrupt related registers are located in the SCU.

7.6.4.1 Interrupt Event Enable Control

The two interrupt events of UART and three interrupt events of SSC module and T21CCU channel 4 & 5 compare match events are of interrupt structure 2 which is described in **Chapter 13.4**. As there is no enable/disable bit(s) for these interrupt events within the module, bits are defined in the SCU register MODIEN1 and MODIEN2 for this purpose.

Peripheral Interrupt Enable Register 1

SCU_MODIEN1	Offset	Reset Value
Peripheral Interrupt Enable Register 1	030_H	see Table 85

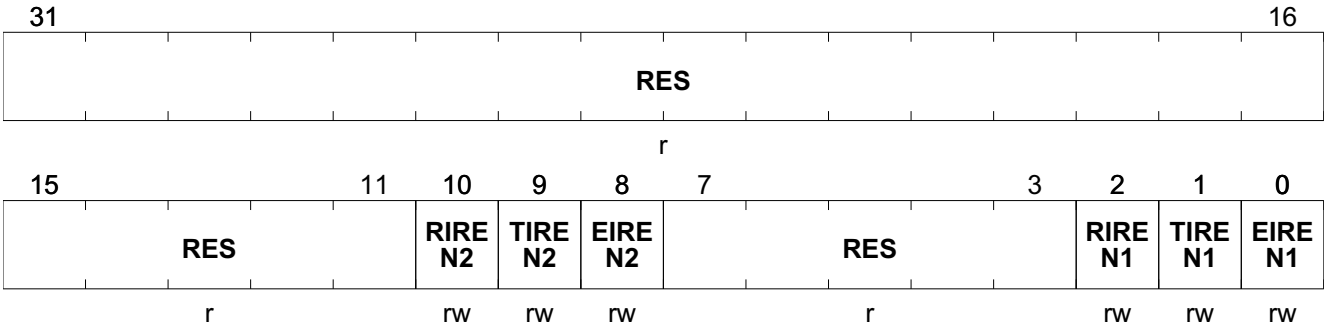

Field	Bits	Type	Description
RES	31:11	r	**Reserved** Returns 0 if read; should be written with 0.
RIREN2	10	rw	**SSC 2 Receive Interrupt Enable** 0_B Receive interrupt is disabled 1_B Receive interrupt is enabled
TIREN2	9	rw	**SSC 2 Transmit Interrupt Enable** 0_B Transmit interrupt is disabled 1_B Transmit interrupt is enabled
EIREN2	8	rw	**SSC 2 Error Interrupt Enable** 0_B Error interrupt is disabled 1_B Error interrupt is enabled
RES	7:3	r	**Reserved** Returns 0 if read; should be written with 0.
RIREN1	2	rw	**SSC 1 Receive Interrupt Enable** 0_B Receive interrupt is disabled 1_B Receive interrupt is enabled
TIREN1	1	rw	**SSC 1 Transmit Interrupt Enable** 0_B Transmit interrupt is disabled 1_B Transmit interrupt is enabled

Field	Bits	Type	Description
EIREN1	0	rw	**SSC 1 Error Interrupt Enable** 0_B Error interrupt is disabled 1_B Error interrupt is enabled

Table 85 RESET of SCU_MODIEN1

Register Reset Type	Reset Values	Reset Short Name	Reset Mode	Note
RESET_TYPE_3	0000 0000_H	RESET_TYPE_3		

Peripheral Interrupt Enable Register 2

SCU_MODIEN2	Offset	Reset Value
Peripheral Interrupt Enable Register 2	034_H	see Table 86

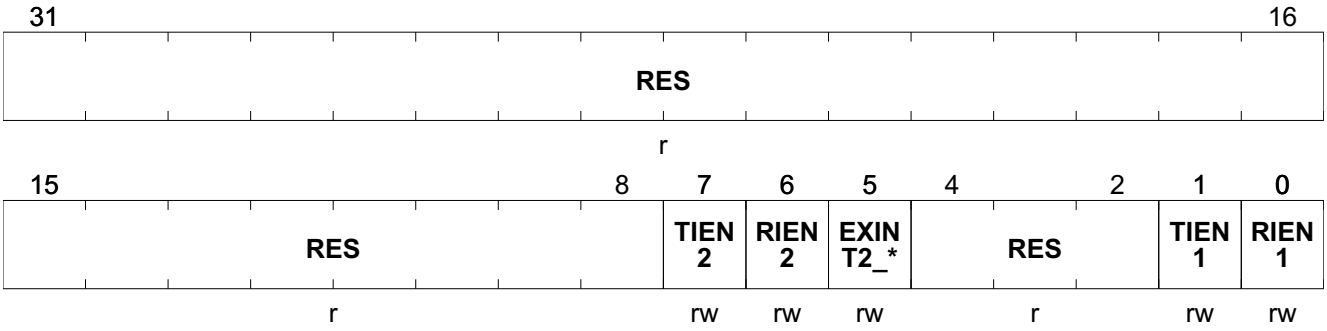

Field	Bits	Type	Description
RES	31:8	r	**Reserved** Returns 0 if read; should be written with 0.
TIEN2	7	rw	**UART 2 Transmit Interrupt Enable** 0_B Transmit interrupt is disabled 1_B Transmit interrupt is enabled
RIEN2	6	rw	**UART 2 Receive Interrupt Enable** 0_B Receive interrupt is disabled 1_B Receive interrupt is enabled
EXINT2_EN	5	rw	**External Interrupt 2 Enable** 0_B External interrupt is disabled 1_B External interrupt is enabled
RES	4:2	r	**Reserved** Returns 0 if read; should be written with 0.
TIEN1	1	rw	**UART 1 Transmit Interrupt Enable** 0_B Transmit interrupt is disabled 1_B Transmit interrupt is enabled
RIEN1	0	rw	**UART 1 Receive Interrupt Enable** 0_B Receive interrupt is disabled 1_B Receive interrupt is enabled

Table 86 RESET of SCU_MODIEN2

Register Reset Type	Reset Values	Reset Short Name	Reset Mode	Note
RESET_TYPE_3	$0000\ 0000_H$	RESET_TYPE_3		

Peripheral Interrupt Enable Register 3

SCU_MODIEN3	Offset	Reset Value
Peripheral Interrupt Enable Register 3	038_H	see Table 87

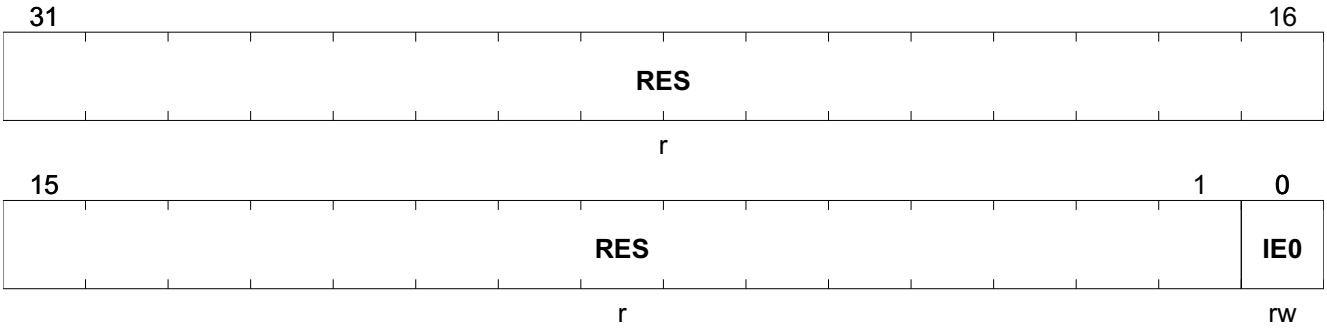

Field	Bits	Type	Description
RES	31:1	r	**Reserved** Returns 0 if read; should be written with 0.
IE0	0	rw	**External Interrupt Enable** 0_B disabled 1_B enabled

Table 87 RESET of SCU_MODIEN3

Register Reset Type	Reset Values	Reset Short Name	Reset Mode	Note
RESET_TYPE_3	0000 0000_H	RESET_TYPE_3		

Peripheral Interrupt Enable Register 4

SCU_MODIEN4	Offset	Reset Value
Peripheral Interrupt Enable Register 4	$03C_H$	see Table 88

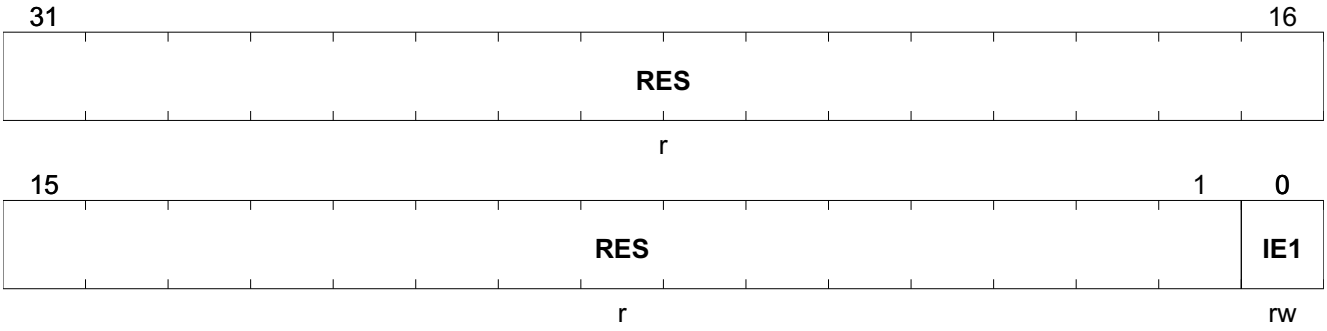

Field	Bits	Type	Description
RES	31:1	r	**Reserved** Returns 0 if read; should be written with 0.
IE1	0	rw	**External Interrupt Enable** 0_B disabled 1_B enabled

Table 88 RESET of SCU_MODIEN4

Register Reset Type	Reset Values	Reset Short Name	Reset Mode	Note
RESET_TYPE_3	$0000\ 0000_H$	RESET_TYPE_3		

Monitoring Input Interrupt Enable Register

SCU_MONIEN	Offset	Reset Value
Monitoring Input Interrupt Enable Register	$18C_H$	see Table 87

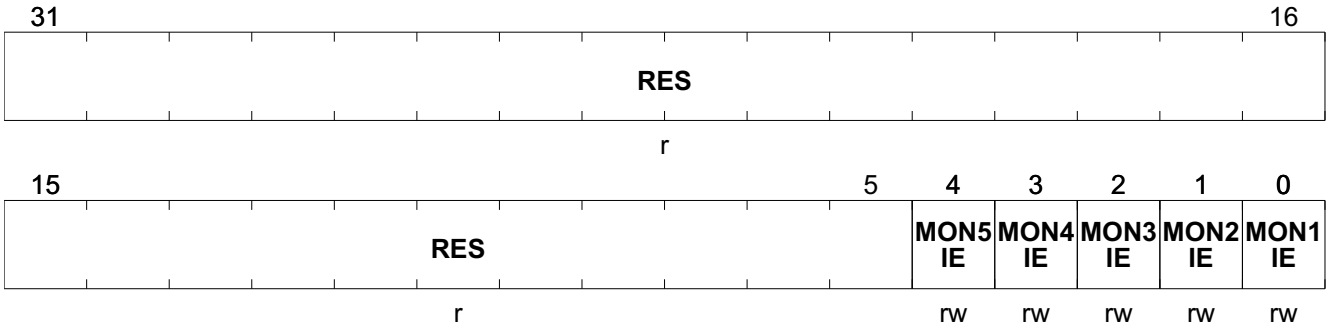

Field	Bits	Type	Description
RES	31:5	r	**Reserved** Returns 0 if read; should be written with 0.
MON5IE	4	rw	**MON5 Interrupt Enable** 0_B disabled 1_B enabled
MON4IE	3	rw	**MON4 Interrupt Enable** 0_B disabled 1_B enabled
MON3IE	2	rw	**MON3 Interrupt Enable** 0_B disabled 1_B enabled
MON2IE	1	rw	**MON2 Interrupt Enable** 0_B disabled 1_B enabled
MON1IE	0	rw	**MON1 Interrupt Enable** 0_B disabled 1_B enabled

Table 89 RESET of SCU_MONIEN

Register Reset Type	Reset Values	Reset Short Name	Reset Mode	Note
RESET_TYPE_3	$0000\ 0000_H$	RESET_TYPE_3		

General Purpose Timer 12 Interrupt Enable Register

SCU_GPT12IEN	Offset	Reset Value
General Purpose Timer 12 Interrupt Enable Register	$15C_H$	see Table 90

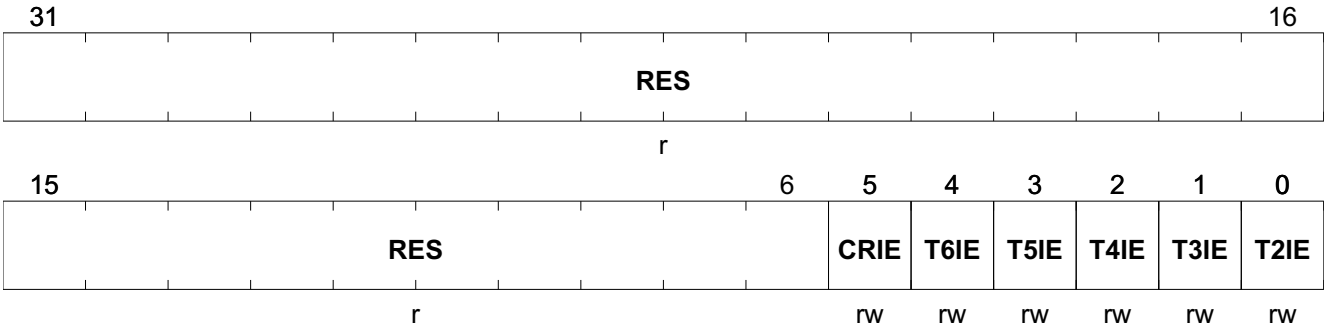

Field	Bits	Type	Description
RES	31:6	r	**Reserved** Returns 0 if read; should be written with 0.
CRIE	5	rw	**GPT12 Capture and Reload Interrupt Enable** 0_B Interrupt is disabled 1_B Interrupt is enabled
T6IE	4	rw	**GPT12 T6 Interrupt Enable** 0_B Interrupt is disabled 1_B Interrupt is enabled
T5IE	3	rw	**GPT12 T5 Interrupt Enable** 0_B Interrupt is disabled 1_B Interrupt is enabled
T4IE	2	rw	**GPT12 T4 Interrupt Enable** 0_B Interrupt is disabled 1_B Interrupt is enabled
T3IE	1	rw	**GPT12 T3 Interrupt Enable** 0_B Interrupt is disabled 1_B Interrupt is enabled
T2IE	0	rw	**GPT12 T2 Interrupt Enable** 0_B Interrupt is disabled 1_B Interrupt is enabled

Table 90 RESET of SCU_GPT12IEN

Register Reset Type	Reset Values	Reset Short Name	Reset Mode	Note
RESET_TYPE_3	$0000\ 0000_H$	RESET_TYPE_3		

Other Interrupt Related Registers

The following interrupt related registers are located in the SCU:

- NMICON

- NMISR
- IRCON0, IRCON1, IRCON3, IRCON4
- EXICON0
- MODIEN1, MODIEN2

All registers, except MODIENx, are described in the Interrupt System **Chapter 13.8**.

7.6.5 NMI Event Flags Handling

Each NMI event and status flag is retained across these resets: 1) soft reset. Specifically, these include all the flags of NMISR register: FNMIWDT, FNMIPLL, FNMINVM, FNMIOCDS, FNMIOWD, FNMIMAP and indirectly, FNMIECC and FNMISUP. In the case of watchdog resets, the requestor can be identified via the reset indicator bits WDT1RST and WDTRST. The ECC NMI is indicated by the respective event flags of SFR EDCSTAT.IRDBE, XRDBE and NVMDBE. Likewise, the supply prewarning NMI and MI_CLK WDT NMI is indicated by the respective event flags located in **SCU_PM** chapter.These NMI event and status flags are otherwise reset to default value with all other resets i.e. power-on, brown-out, hardware, WDT1 (except WDT1RST) and wakeup reset.

7.7 General Port Control

The SCU contains control registers for the selection of:

- alternate input functions of UART, Timers and External Interrupts (Section 7.7.1)
- port output driver strength and temperature compensation (Section 7.7.2)

For functional description of GPIO ports, refer to Chapter 15.

7.7.1 Input Pin Function Selection

MODPISELx registers control the selection of the input pin functions. For UART, the selection of the RXD line also enables the corresponding TXD line.

Peripheral Input Select Register

SCU_MODPISEL	Offset	Reset Value
Peripheral Input Select Register	$0B8_H$	see Table 91

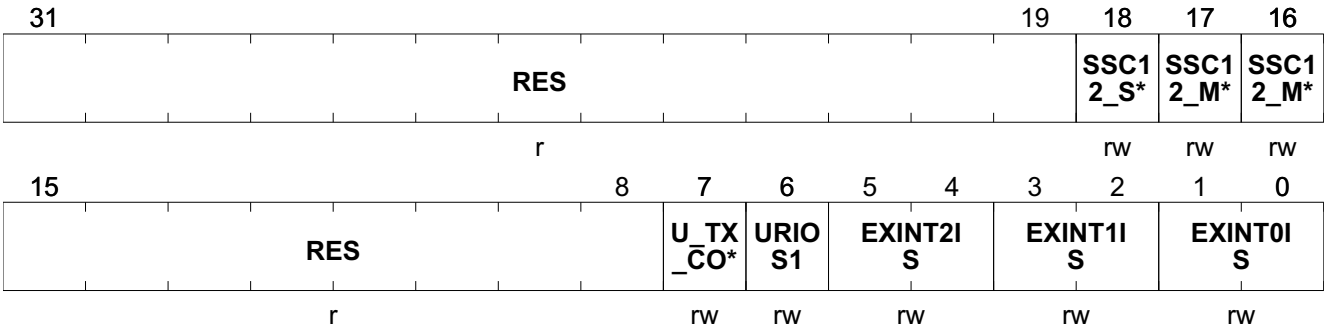

Field	Bits	Type	Description
RES	31:19	r	**Reserved** Returns 0 if read; should be written with 0.
SSC12_S_MRST_OUTSEL	18	rw	**Output selection for SSC12_S_MRST** See Chapter 15.4. 0_B SSC1_S_MRST 1_B SSC2_S_MRST
SSC12_M_MTSR_OUTSEL	17	rw	**Output selection for SSC12_M_MTSR** See Chapter 15.4. 0_B SSC1_M_MTSR 1_B SSC2_M_MTSR
SSC12_M_SCK_OUTSEL	16	rw	**Output selection for SSC12_M_SCK** See Chapter 15.4. 0_B SSC1_M_SCK 1_B SSC2_M_SCK
RES	15:8	r	**Reserved** Returns 0 if read; should be written with 0.

Field	Bits	Type	Description
U_TX_CONDIS	7	rw	**UART1 TxD Connection Disable** 0_B UART1-TX-Output -LIN Transmitter TX Input Connection available. 1_B UART1-TX-Output -LIN Transmitter TX Input Connection not available (can be stimulated by external port pin).
URIOS1	6	rw	**UART1 Input/Output Select** *Note: To select TXD_0 as the Transmitter output, the Port ALTSELx registers need to be configured additionally.* 0_B UART1 Receiver Input RXD1_0 (Connection to LIN is available). 1_B UART1 Receiver Input RXD1_1 (Connection to LIN is not available).
EXINT2IS	5:4	rw	**External Interrupt 2 Input Select** 00_B External Interrupt Input EXINT2_0 is selected. 01_B External Interrupt Input EXINT2_1 is selected. 10_B External Interrupt Input EXINT2_2 is selected. 11_B External Interrupt Input EXINT2_3 is selected.
EXINT1IS	3:2	rw	**External Interrupt 1 Input Select** 00_B External Interrupt Input EXINT1_0 is selected. 01_B External Interrupt Input EXINT1_1 is selected. 10_B External Interrupt Input EXINT1_2 is selected. 11_B External Interrupt Input EXINT1_3 is selected.
EXINT0IS	1:0	rw	**External Interrupt 0 Input Select** 00_B External Interrupt Input EXINT0_0 is selected. 01_B External Interrupt Input EXINT0_1 is selected. 10_B External Interrupt Input EXINT0_2 is selected. 11_B External Interrupt Input EXINT0_3 is selected.

Table 91 RESET of SCU_MODPISEL

Register Reset Type	Reset Values	Reset Short Name	Reset Mode	Note
RESET_TYPE_3	$0000\ 0000_H$	RESET_TYPE_3		

Peripheral Input Select Register 1

SCU_MODPISEL1	Offset	Reset Value
Peripheral Input Select Register 1	$0BC_H$	see Table 92

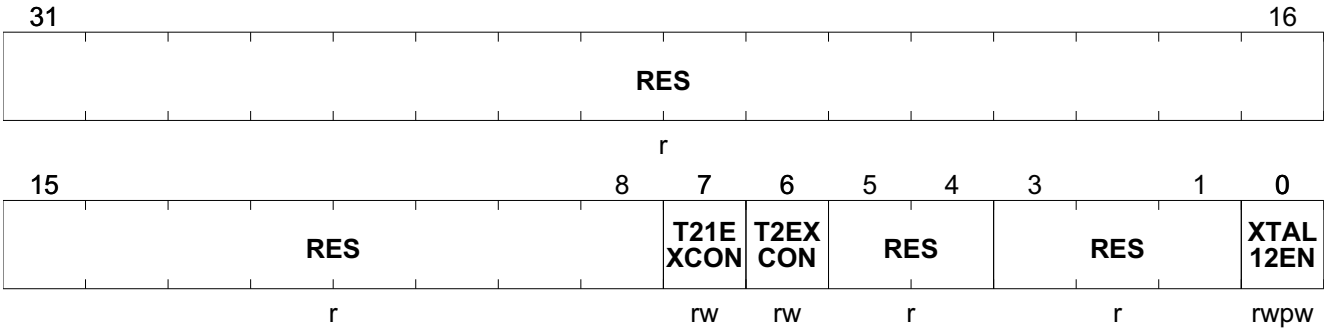

Field	Bits	Type	Description
RES	31:8	r	**Reserved** Returns 0 if read; should be written with 0.
T21EXCON	7	rw	**Timer 21 External Input Control** 0_B Timer 21 Input T21EX is selected by bit field SCU_MODPISEL2.T21EXIS. 1_B Timer 21 Input T21EX is connected to signal from CCU6 (Output >cc6_ch0).
T2EXCON	6	rw	**Timer 2 External Input Control** 0_B Timer 2 Input T2EX is selected by bit field SCU_MODPISEL2.T2EXIS. 1_B Timer 2 Input T2EX is connected to signal from CCU6 (Output >cc6_cout60).
RES	5:4	r	**Reserved** Returns 0 if read; should be written with 0.
RES	3:1	r	**Reserved** Returns 0 if read; should be written with 0.
XTAL12EN	0	rwpw	**Pins XTAL1/2 Enable Bit** *Note: this bit is RESET_TYPE_4* 0_B Pins XTAL1/2 is not available. This setting overrides the OSC_CON.XPD setting. 1_B Pins XTAL1/2 is available.

Table 92 RESET of SCU_MODPISEL1

Register Reset Type	Reset Values	Reset Short Name	Reset Mode	Note
RESET_TYPE_3	$0000\ 0000_H$	RESET_TYPE_3		
RESET_TYPE_4	$0000\ 0000_H$	RESET_TYPE_4		

Peripheral Input Select Register 2

SCU_MODPISEL2	Offset	Reset Value
Peripheral Input Select Register 2	$0C0_H$	see Table 93

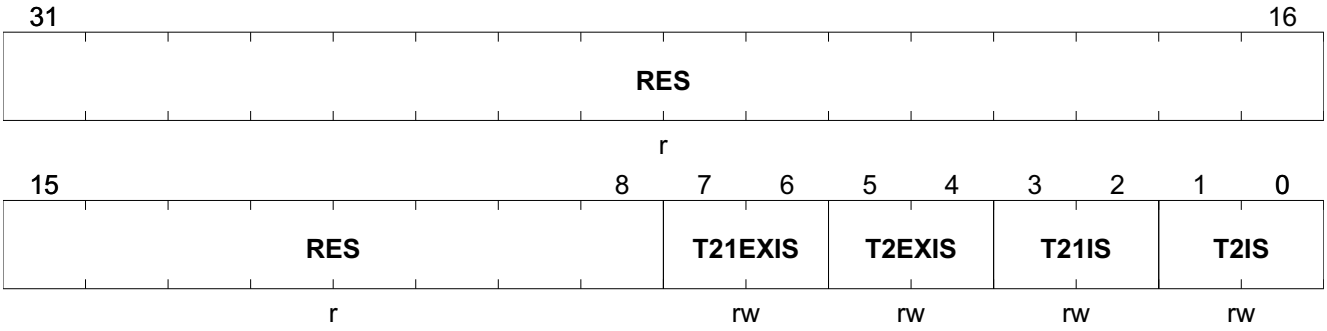

Field	Bits	Type	Description
RES	31:8	r	**Reserved** Returns 0 if read; should be written with 0.
T21EXIS	7:6	rw	**Timer 21 External Input Select** *Note: This selection takes effect only when SCU_MODPISEL1.T21EXCON = 0.* 00_B Timer 21 Input T21EX_0 is selected. 01_B Timer 21 Input T21EX_1 is selected. 10_B Timer 21 Input T21EX_2 is selected. 11_B Timer 21 Input T21EX_3 is selected.
T2EXIS	5:4	rw	**Timer 2 External Input Select** *Note: This selection takes effect only when SCU_MODPISEL1.T2EXCON = 0.* 00_B Timer 2 Input T2EX_0 is selected. 01_B Timer 2 Input T2EX_1 is selected. 10_B Timer 2 Input T2EX_2 is selected. 11_B Timer 2 Input T2EX_3 is selected.
T21IS	3:2	rw	**Timer 21 Input Select** 00_B Timer 21 Input T21_0 is selected. 01_B Timer 21 Input T21_1 is selected. 10_B Timer 21 Input T21_2 is selected. 11_B Reserved.
T2IS	1:0	rw	**Timer 2 Input Select** 00_B Timer 2 Input T2_0 is selected. 01_B Timer 2 Input T2_1 is selected. 10_B Timer 2 Input T2_2 is selected. 11_B Reserved.

Table 93 RESET of SCU_MODPISEL2

Register Reset Type	Reset Values	Reset Short Name	Reset Mode	Note
RESET_TYPE_3	0000 0000_H	RESET_TYPE_3		

Peripheral Input Select Register 3

SCU_MODPISEL3	Offset	Reset Value
Peripheral Input Select Register 3	$0C4_H$	see Table 94

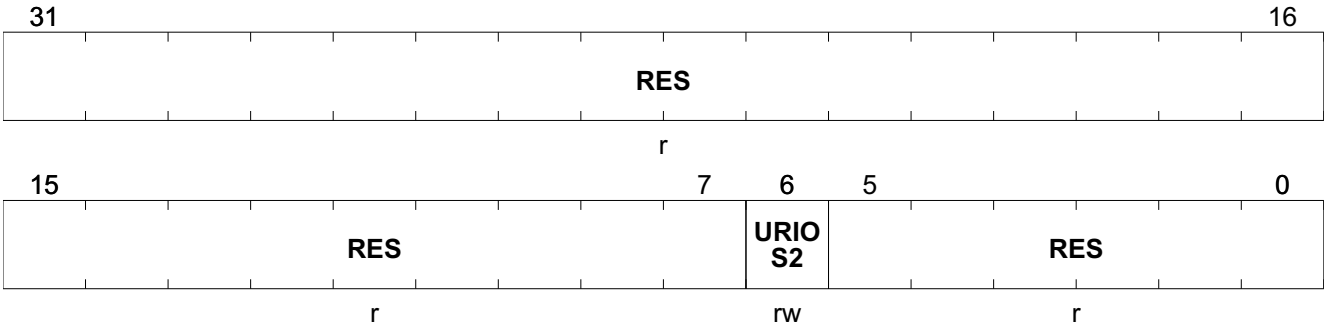

Field	Bits	Type	Description
RES	31:7	r	**Reserved** Returns 0 if read; should be written with 0.
URIOS2	6	rw	**UART2 Input/Output Select** *Note: To select TXD2_1 as the Transmitter output, the Port ALTSELx registers need to be configured additionally.* 0_B UART2 Receiver Input RXD2_0 and Transmitter Output TXD2_0 is selected. 1_B UART2 Receiver Input RXD2_1 and Transmitter Output TXD2_1 is selected.
RES	5:0	r	**Reserved** Returns 0 if read; should be written with 0.

Table 94 RESET of SCU_MODPISEL3

Register Reset Type	Reset Values	Reset Short Name	Reset Mode	Note
RESET_TYPE_3	$0000\ 0000_H$	RESET_TYPE_3		

7.7.2 Port Output Control

Px_POCONy registers controls the output driver strength for each of the bidirectional port pin through the bit field PDMn, where x denotes the port number and n denotes the pin number.

Port Output Control Register

SCU_P0_POCON0	Offset	Reset Value
Port Output Control Register	$0E8_H$	see Table 95

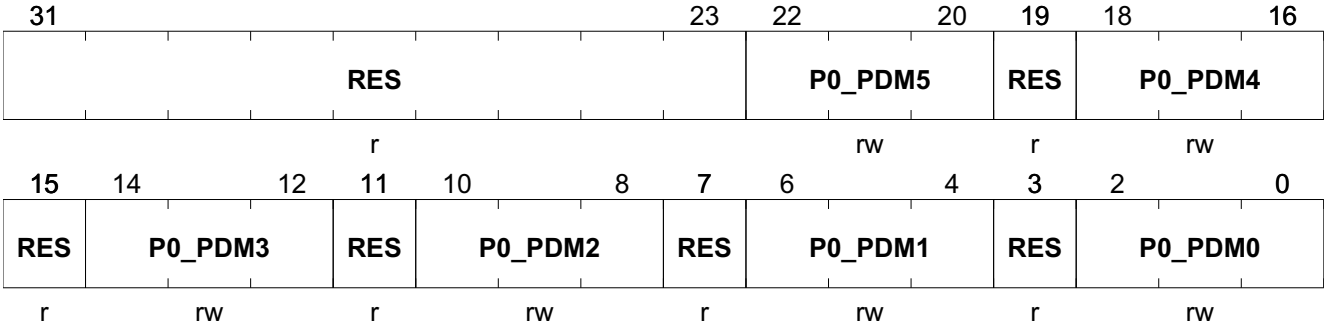

Field	Bits	Type	Description
RES	31:23	r	**Reserved** Returns 0 if read; should be written with 0.
P0_PDM5	22:20	rw	**P0.5 Port Driver Mode** Code Driver Strength[1] and Edge Shape[2] 000_B Strong driver and sharp edge mode 001_B Strong driver and medium edge mode 010_B Strong driver and soft edge mode 011_B Weak driver 100_B Medium driver 101_B Medium driver 110_B Medium driver 111_B Weak driver
RES	19	r	**Reserved** Returns 0 if read; should be written with 0.
P0_PDM4	18:16	rw	**P0.4 Port Driver Mode** Code Driver Strength[1] and Edge Shape[2] 000_B Strong driver and sharp edge mode 001_B Strong driver and medium edge mode 010_B Strong driver and soft edge mode 011_B Weak driver 100_B Medium driver 101_B Medium driver 110_B Medium driver 111_B Weak driver
RES	15	r	**Reserved** Returns 0 if read; should be written with 0.

Field	Bits	Type	Description
P0_PDM3	14:12	rw	**P0.3 Port Driver Mode** Code Driver Strength[1] and Edge Shape[2] 000_B Strong driver and sharp edge mode 001_B Strong driver and medium edge mode 010_B Strong driver and soft edge mode 011_B Weak driver 100_B Medium driver 101_B Medium driver 110_B Medium driver 111_B Weak driver
RES	11	r	**Reserved** Returns 0 if read; should be written with 0.
P0_PDM2	10:8	rw	**P0.2 Port Driver Mode** Code Driver Strength[1] and Edge Shape[2] 000_B Strong driver and sharp edge mode 001_B Strong driver and medium edge mode 010_B Strong driver and soft edge mode 011_B Weak driver 100_B Medium driver 101_B Medium driver 110_B Medium driver 111_B Weak driver
RES	7	r	**Reserved** Returns 0 if read; should be written with 0.
P0_PDM1	6:4	rw	**P0.1 Port Driver Mode** Code Driver Strength[1] and Edge Shape[2] 000_B Medium driver 001_B Not used 010_B Not used 011_B Weak driver 100_B Medium driver 101_B Medium driver 110_B Medium driver 111_B Weak driver
RES	3	r	**Reserved** Returns 0 if read; should be written with 0.
P0_PDM0	2:0	rw	**P0.0 Port Driver Mode** Code Driver Strength[1] and Edge Shape[2] 000_B Medium driver 001_B Not used 010_B Not used 011_B Weak driver 100_B Medium driver 101_B Medium driver 110_B Medium driver 111_B Weak driver

1) Defines the current the respective driver can deliver to the external circuitry.

2) Defines the switching characteristics to the respective new output driver. This also influences the peak currents through the driver when producing an edge, i.e. when changing the output level.

Table 95 RESET of SCU_P0_POCON0

Register Reset Type	Reset Values	Reset Short Name	Reset Mode	Note
RESET_TYPE_3	$0000\ 0000_H$	RESET_TYPE_3		

Port Output Control Register

SCU_P1_POCON0	Offset	Reset Value
Port Output Control Register	$0F8_H$	see Table 96

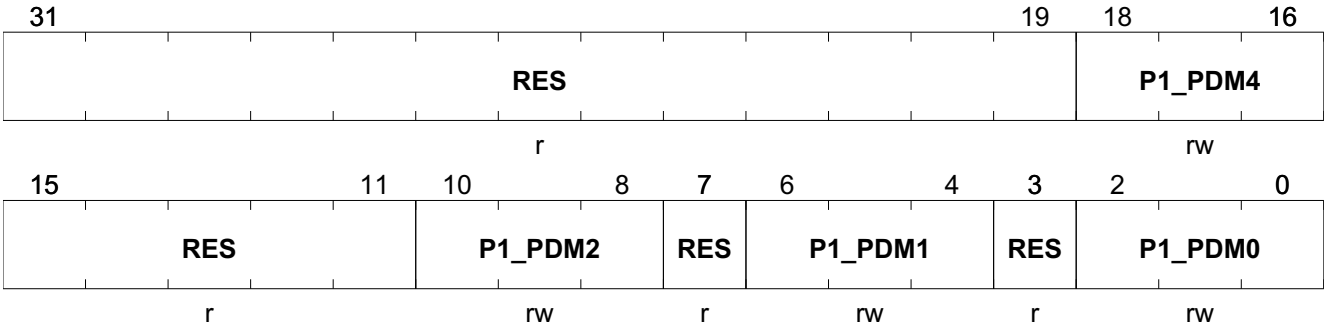

Field	Bits	Type	Description
RES	31:19	r	**Reserved** Returns 0 if read; should be written with 0.
P1_PDM4	18:16	rw	**P1.4 Port Driver Mode** Code Driver Strength[1] and Edge Shape[2] 000_B Strong driver and sharp edge mode 001_B Strong driver and medium edge mode 010_B Strong driver and soft edge mode 011_B Weak driver 100_B Medium driver 101_B Medium driver 110_B Medium driver 111_B Weak driver
RES	15:11	r	**Reserved** Returns 0 if read; should be written with 0.
P1_PDM2	10:8	rw	**P1.2 Port Driver Mode** Code Driver Strength[1] and Edge Shape[2] 000_B Medium driver 001_B Not used 010_B Not used 011_B Weak driver 100_B Medium driver 101_B Medium driver 110_B Medium driver 111_B Weak driver
RES	7	r	**Reserved** Returns 0 if read; should be written with 0.

Field	Bits	Type	Description
P1_PDM1	6:4	rw	**P1.1 Port Driver Mode** Code Driver Strength[1] and Edge Shape[2] 000_B Medium driver 001_B Not used 010_B Not used 011_B Weak driver 100_B Medium driver 101_B Medium driver 110_B Medium driver 111_B Weak driver
RES	3	r	**Reserved** Returns 0 if read; should be written with 0.
P1_PDM0	2:0	rw	**P1.0 Port Driver Mode** Code Driver Strength[1] and Edge Shape[2] 000_B Medium driver 001_B Not used 010_B Not used 011_B Weak driver 100_B Medium driver 101_B Medium driver 110_B Medium driver 111_B Weak driver

1) Defines the current the respective driver can deliver to the external circuitry.

2) Defines the switching characteristics to the respective new output driver. This also influences the peak currents through the driver when producing an edge, i.e. when changing the output level.

Table 96 RESET of SCU_P1_POCON0

Register Reset Type	Reset Values	Reset Short Name	Reset Mode	Note
RESET_TYPE_3	$0000\ 0000_H$	RESET_TYPE_3		

Temperature Compensation Control Register

The TCCR register controls the temperature compensation of all the output port pins with strong drivers, i.e. on a device level. The TCCR register has no effect on output port pIns that operate in the weak and medium driver modes.

SCU_TCCR	Offset	Reset Value
Temperature Compensation Control Register	$0F4_H$	see Table 97

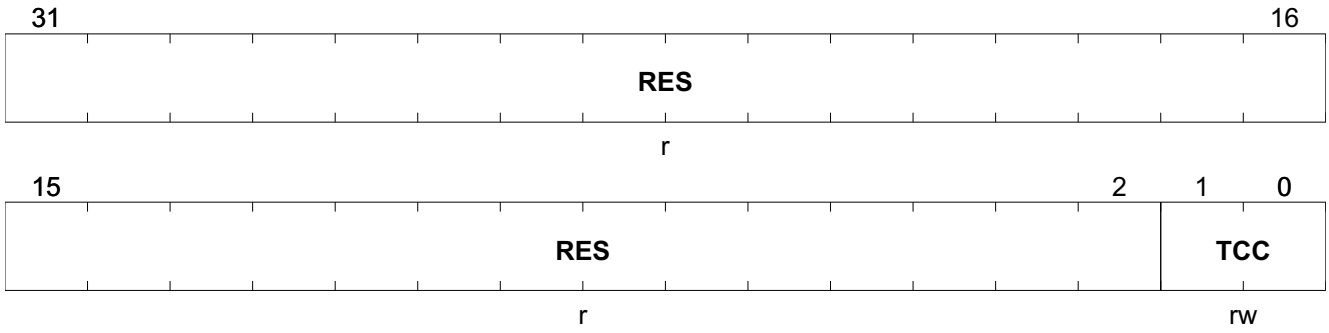

Field	Bits	Type	Description
RES	31:2	r	**Reserved** Returns 0 if read; should be written with 0.
TCC	1:0	rw	**Temperature Compensation Control** The slew rate of the output driver is kept stable over the selected temperature range: 00_B T_J: -40 °C to 0 °C 01_B T_J: 0 °C to 40 °C 10_B T_J: 40 °C to 80 °C 11_B T_J: 80 °C to 150 °C

Table 97 RESET of SCU_TCCR

Register Reset Type	Reset Values	Reset Short Name	Reset Mode	Note
RESET_TYPE_3	$0000\ 0000_H$	RESET_TYPE_3		

7.7.3 GPT12 T3IN/T4IN Input Pin Function Selection

GPT12PISEL register control the selection of the input pin functions of T3INB and T4IND in GPT12.

GPT12 Peripheral Input Select Register

SCU_GPT12PISEL	Offset	Reset Value
GPT12 Peripheral Input Select Register	$0D0_H$	see Table 98

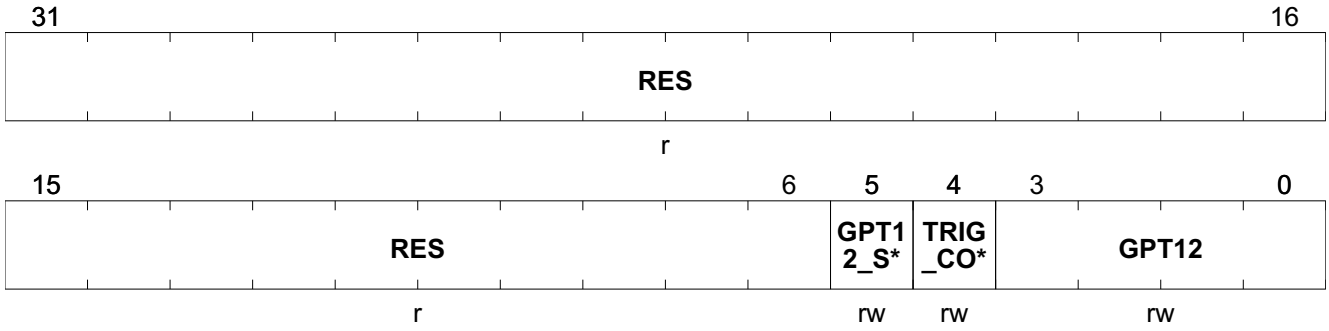

Field	Bits	Type	Description
RES	31:6	r	**Reserved** Returns 0 if read; should be written with 0.
GPT12_SEL	5	rw	**CCU6 Trigger Configuration.** 0_B CCU6_INT is triggered by Timer21 1_B CCU6_INT is triggered by GPT12PISEL.GPT12
TRIG_CONF	4	rw	**CCU6 Trigger Configuration.** 0_B Trigger is just for one measurement (default) 1_B Trigger is present until next input edge (selected by GPT12) - continuous measurement.
GPT12	3:0	rw	**GPT12 TIN3B / TIN4D Input Select** 0000_B CC60 0001_B CC61 0010_B CC62 0011_B T12 ZM 0100_B T12 PM 0101_B T12 CM0 0110_B T12 CM1 0111_B T12 CM2 1000_B T13 PM 1001_B T13 ZM 1010_B T13 CM 1011_B any pos or neg edge on CC60/61/62 1100_B RES 1101_B RES 1110_B RES 1111_B RES

Table 98 RESET of SCU_GPT12PISEL

Register Reset Type	Reset Values	Reset Short Name	Reset Mode	Note
RESET_TYPE_3	0000 0000_H	RESET_TYPE_3		

7.8 Differential Unit Trigger Enable (only TLE9845QX)

The Differential Unit inside DPP1 module requires enable signals for telling the processing when to accept and calculate a new result based on an incoming trigger signal. To realize a certain blank timer for the DU Unit to perform the measurements aligned to the dedicated PWM Signal the Timer 13 of CCU6 is used.

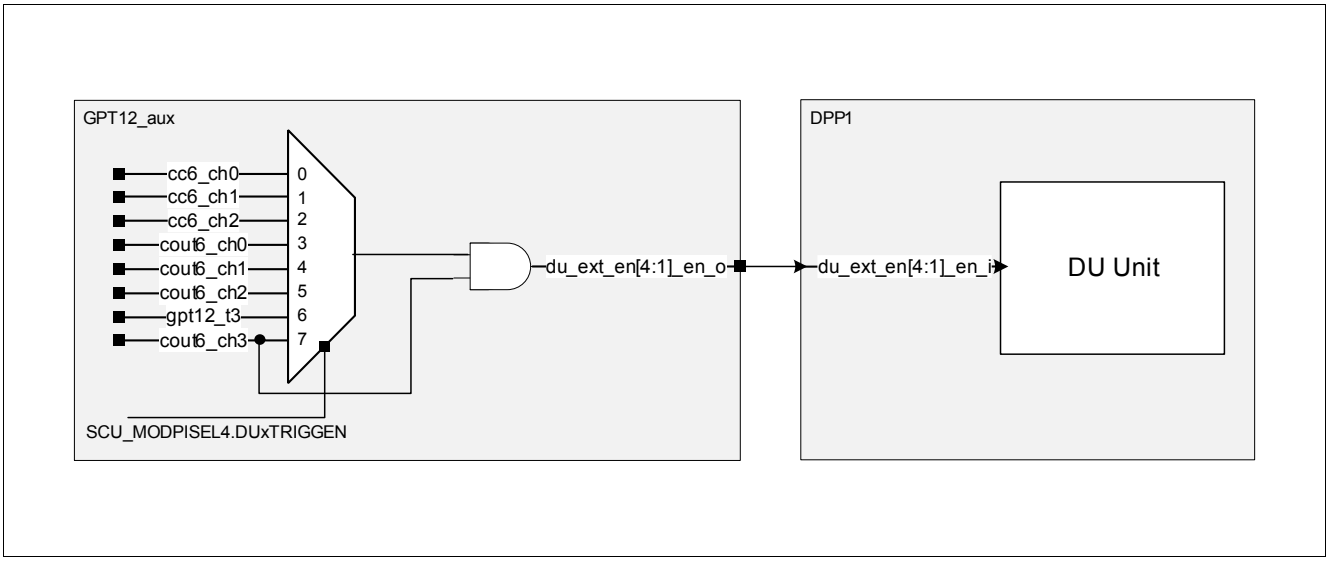

Figure 36 Differential Unit

7.8.1 Differential Unit Trigger

7.8.1.1 Differential Unit Trigger register

Peripheral Input Select Register 4

SCU_MODPISEL4	Offset	Reset Value
Peripheral Input Select Register 4	$0FC_H$	see Table 99

31	27	26	24	23	19	18	16
RES		DU4TRIGGEN		RES		DU3TRIGGEN	
r		rw		r		rw	

15	11	10	8	7	3	2	0
RES		DU2TRIGGEN		RES		DU1TRIGGEN	
r		rw		r		rw	

Field	Bits	Type	Description
RES	31:27	r	**Reserved** Returns 0 if read; should be written with 0.
DU4TRIGGEN	26:24	rw	**Differential Unit Trigger Enable** *Note: These bits configure the enable input of the differential unit.* 000_B CC60 is selected. 001_B CC61 is selected. 010_B CC62 is selected. 011_B COUT60 is selected. 100_B COUT61 is selected. 101_B COUT62 is selected. 110_B T3OUT is selected. 111_B COUT63 is selected.
RES	23:19	r	**Reserved** Returns 0 if read; should be written with 0.
DU3TRIGGEN	18:16	rw	**Differential Unit Trigger Enable** *Note: These bits configure the enable input of the differential unit.* 000_B CC60 is selected. 001_B CC61 is selected. 010_B CC62 is selected. 011_B COUT60 is selected. 100_B COUT61 is selected. 101_B COUT62 is selected. 110_B T3OUT is selected. 111_B COUT63 is selected.
RES	15:11	r	**Reserved** Returns 0 if read; should be written with 0.
DU2TRIGGEN	10:8	rw	**Differential Unit Trigger Enable** *Note: These bits configure the enable input of the differential unit.* 000_B CC60 is selected. 001_B CC61 is selected. 010_B CC62 is selected. 011_B COUT60 is selected. 100_B COUT61 is selected. 101_B COUT62 is selected. 110_B T3OUT is selected. 111_B COUT63 is selected.
RES	7:3	r	**Reserved** Returns 0 if read; should be written with 0.

Field	Bits	Type	Description
DU1TRIGGEN	2:0	rw	**Differential Unit Trigger Enable** *Note: These bits configure the enable input of the differential unit.* 000_B CC60 is selected. 001_B CC61 is selected. 010_B CC62 is selected. 011_B COUT60 is selected. 100_B COUT61 is selected. 101_B COUT62 is selected. 110_B T3OUT is selected. 111_B COUT63 is selected.

Table 99 RESET of SCU_MODPISEL4

Register Reset Type	Reset Values	Reset Short Name	Reset Mode	Note
RESET_TYPE_3	$0403\ 0100_H$	RESET_TYPE_3		

7.9 Flexible Peripheral Management

The Flexible Peripheral Management sub-module provides the system designer greater control on the operational status of each individual digital peripheral. Peripherals which are not required for a particular functionality can be disabled by programming the assigned register bits which would gate off the clock inputs. This would further reduce overall power consumption of the microcontroller.

Each register bit controls one peripheral. When this bit is set, the request signal to gate the peripheral clock is activated. The peripheral will then synchronize the gating off of the clock to the peripheral.

7.9.1 Peripheral Management Registers

Peripheral Management Control Register

SCU_PMCON	Offset	Reset Value
Peripheral Management Control Register	060_H	see Table 100

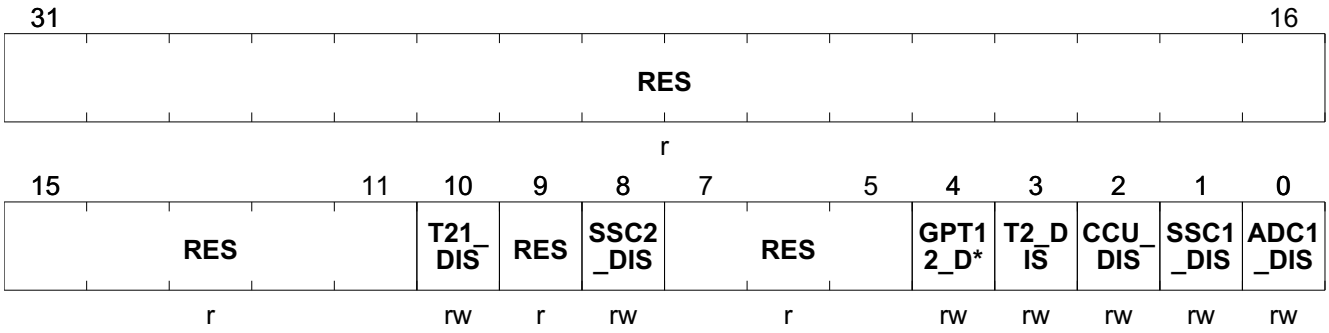

Field	Bits	Type	Description
RES	31:11	r	**Reserved** Returns 0 if read; should be written with 0.
T21_DIS	10	rw	**T21 Disable Request. Active high.** 0_B T21 is in normal operation. (default) 1_B Request to disable the T21.
RES	9	r	**Reserved** Returns 0 if read; should be written with 0.
SSC2_DIS	8	rw	**SSC2 Disable Request. Active high.** 0_B SSC is in normal operation. (default) 1_B Request to disable the SSC.
RES	7:5	r	**Reserved** Returns 0 if read; should be written with 0.
GPT12_DIS	4	rw	**General Purpose Timer 12 Disable Request. Active high.** 0_B GPT12 is in normal operation. (default) 1_B Request to disable the GPT12.
T2_DIS	3	rw	**T2 Disable Request. Active high.** 0_B T2 is in normal operation. (default) 1_B Request to disable the T2.

Field	Bits	Type	Description
CCU_DIS	2	rw	**CCU Disable Request. Active high.** 0_B CCU is in normal operation. (default) 1_B Request to disable the CCU.
SSC1_DIS	1	rw	**SSC1 Disable Request. Active high.** 0_B SSC is in normal operation. (default) 1_B Request to disable the SSC.
ADC1_DIS	0	rw	**ADC1 Disable Request. Active high.** 0_B ADC1 is in normal operation. (default) 1_B Request to disable the ADC.

Table 100 RESET of SCU_PMCON

Register Reset Type	Reset Values	Reset Short Name	Reset Mode	Note
RESET_TYPE_3	$0000\ 0000_H$	RESET_TYPE_3		

7.10 Module Suspend Control

When the On-Chip Debug Support (Debug Mode) is in Monitor Mode (halted_o from ARM debug), timers in certain modules in TLE984xQX can be suspended based on the settings of their corresponding module suspend bits in register MODSUSP. When suspended, only the timer stops counting as the counter input clock is gated off. The module is still clocked so that module registers are accessible.

Module Suspend Control Register

SCU_MODSUSP	Offset	Reset Value
Module Suspend Control Register	$0C8_H$	see Table 101

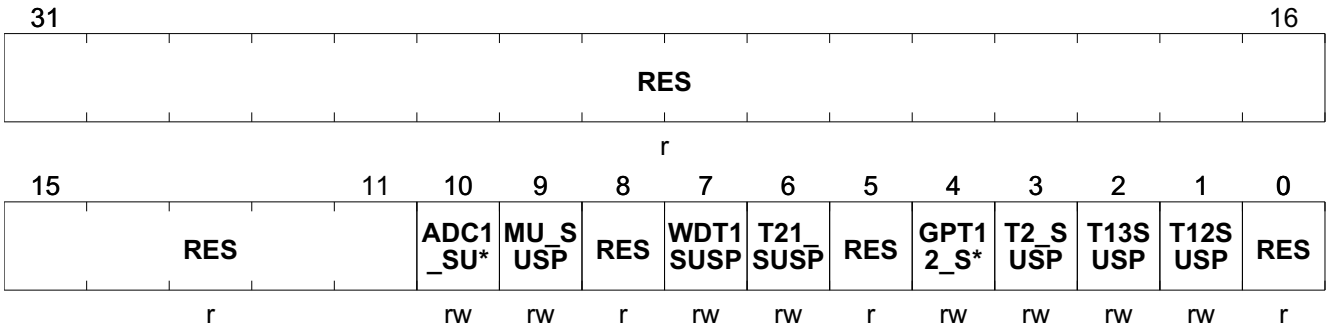

Field	Bits	Type	Description
RES	31:11	r	**Reserved** Returns 0 if read; should be written with 0.
ADC1_SUSP	10	rw	**ADC1 Unit Debug Suspend Bit** 0_B ADC1 will not be suspended. 1_B ADC1 will be suspended.
MU_SUSP	9	rw	**Measurement Unit Debug Suspend Bit** 0_B MU will not be suspended. 1_B MU will be suspended.
RES	8	r	**Reserved** Returns 0 if read; should be written with 0.
WDT1SUSP	7	rw	**Watchdog Timer 1 Debug Suspend Bit** 0_B WDT1 will not be suspended. 1_B WDT1 will be suspended.
T21_SUSP	6	rw	**Timer21 Debug Suspend Bit** 0_B Timer21 will not be suspended. 1_B Timer21 will be suspended.
RES	5	r	**Reserved** Returns 0 if read; should be written with 0.
GPT12_SUSP	4	rw	**GPT12 Debug Suspend Bit** 0_B GPT12 will not be suspended. 1_B GPT12 will be suspended.
T2_SUSP	3	rw	**Timer2 Debug Suspend Bit** 0_B Timer2 will not be suspended. 1_B Timer2 will be suspended.

Field	Bits	Type	Description
T13SUSP	2	rw	**Timer 13 Debug Suspend Bit** When suspended, additionally the T13 PWM output is set to inactive level. 0_B Timer 13 in Capture/Compare Unit will not be suspended. 1_B Timer 13 in Capture/Compare Unit will be suspended.
T12SUSP	1	rw	**Timer 12 Debug Suspend Bit** When suspended, additionally the T12 PWM outputs are set to inactive level and capture inputs are disabled. 0_B Timer 12 in Capture/Compare Unit will not be suspended. 1_B Timer 12 in Capture/Compare Unit will be suspended.
RES	0	r	**Reserved** Returns 0 if read; should be written with 0.

Table 101 RESET of SCU_MODSUSP

Register Reset Type	Reset Values	Reset Short Name	Reset Mode	Note
RESET_TYPE_3	$0000\ 0081_H$	RESET_TYPE_3		

7.11 Baud-rate Generator

The baud-rate generator in SCU is used to generate the baud rate for the UART module. See **Chapter 19.6** for the functional description. The SCU contains two of this registers. One is dedicated for UART1 and the other for UART2.

7.11.1 Baudrate Generator Registers

7.11.1.1 Baud-rate Generator Control and Status Registers

Baud Rate Control Register 1

SCU_BCON1	Offset	Reset Value
Baud Rate Control Register 1	**088_H**	**see Table 102**

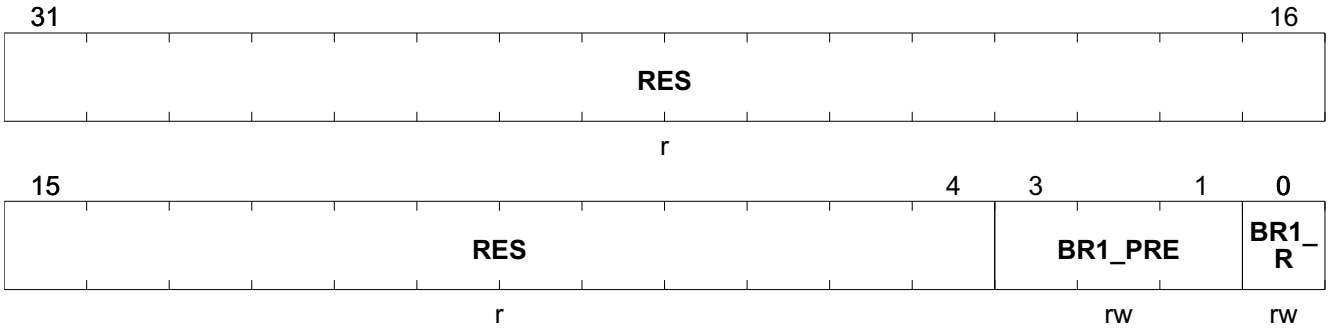

Field	Bits	Type	Description
RES	31:4	r	**Reserved** Returns 0 if read; should be written with 0.
BR1_PRE	3:1	rw	**Prescaler Bit** Selects the input clock for f_{DIV} which is derived from the peripheral clock. Others: reserved 000_B $f_{DIV} = f_{PCLK}$ 001_B $f_{DIV} = f_{PCLK}/2$ 010_B $f_{DIV} = f_{PCLK}/4$ 011_B $f_{DIV} = f_{PCLK}/8$ 100_B $f_{DIV} = f_{PCLK}/16$ 101_B $f_{DIV} = f_{PCLK}/32$
BR1_R	0	rw	**Baud Rate Generator Run Control Bit** *Note: BR_VALUE should only be written if R = 0.* 0_B Baud-rate generator disabled. 1_B Baud-rate generator enabled.

Table 102 RESET of SCU_BCON1

Register Reset Type	Reset Values	Reset Short Name	Reset Mode	Note
RESET_TYPE_3	$0000\ 0000_H$	RESET_TYPE_3		

Baud Rate Control Register 2

SCU_BCON2	Offset	Reset Value
Baud Rate Control Register 2	098_H	see Table 103

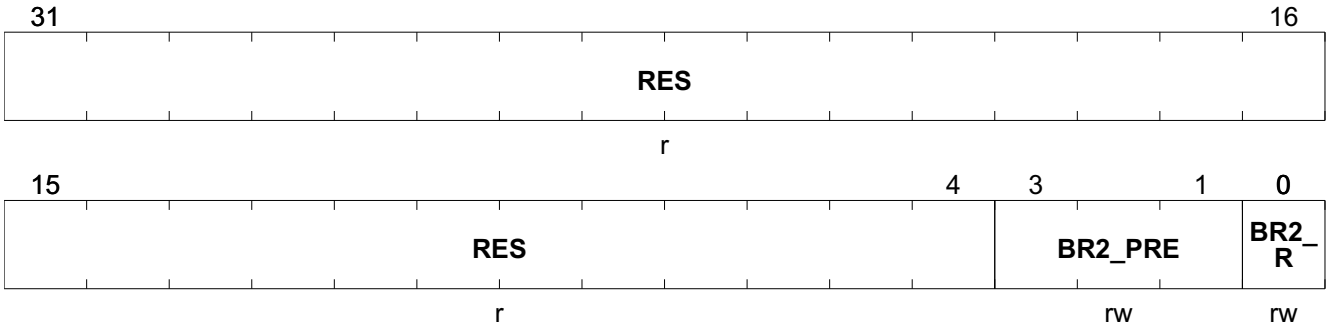

Field	Bits	Type	Description
RES	31:4	r	**Reserved** Returns 0 if read; should be written with 0.
BR2_PRE	3:1	rw	**Prescaler Bit** Selects the input clock for f_{DIV} which is derived from the peripheral clock. Others: reserved 000_B $f_{DIV} = f_{PCLK}$ 001_B $f_{DIV} = f_{PCLK}/2$ 010_B $f_{DIV} = f_{PCLK}/4$ 011_B $f_{DIV} = f_{PCLK}/8$ 100_B $f_{DIV} = f_{PCLK}/16$ 101_B $f_{DIV} = f_{PCLK}/32$
BR2_R	0	rw	**Baud Rate Generator Run Control Bit** *Note: BR_VALUE should only be written if R = 0.* 0_B Baud-rate generator disabled. 1_B Baud-rate generator enabled.

Table 103 RESET of SCU_BCON2

Register Reset Type	Reset Values	Reset Short Name	Reset Mode	Note
RESET_TYPE_3	$0000\ 0000_H$	RESET_TYPE_3		

7.11.1.2 Baud-rate Generator Timer/Reload Registers

The low and high bytes of the baud rate timer/reload register BG contains the 11-bit reload value for the baud rate timer and the 5-bit fractional divider selection.

Reading the low byte of register BG returns the content of the lower three bits of the baud rate timer and the FD_SEL setting, while reading the high byte returns the content of the upper 8 bits of the baud rate timer.

Writing to register BG loads the baud rate timer with the reload and fractional divider values from the BG register, the first instruction cycle after BCON.R is set.

BG should only be written if R = 0. Also this register should be present twice. One is for UART1 and the other for UART2.

Baud Rate Timer/Reload Register, Low Byte 1

SCU_BGL1	Offset	Reset Value
Baud Rate Timer/Reload Register, Low Byte 1	$08C_H$	see Table 104

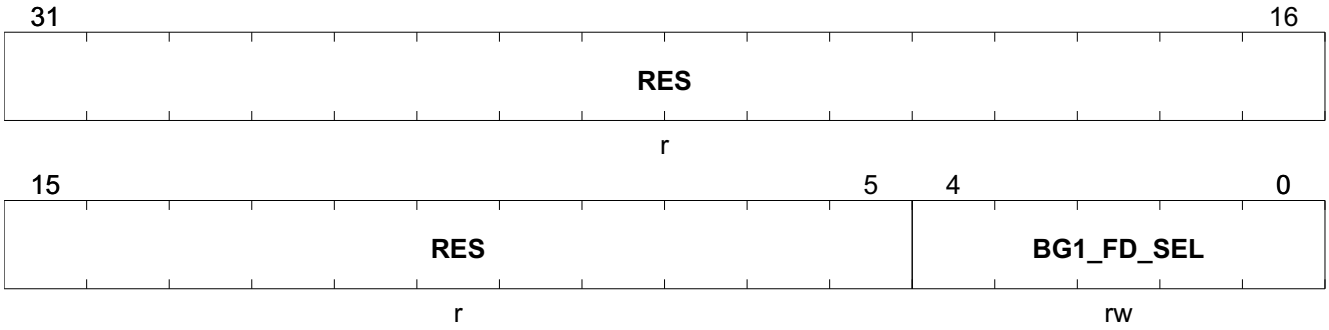

Field	Bits	Type	Description
RES	31:5	r	**Reserved** Returns 0 if read; should be written with 0.
BG1_FD_SEL	4:0	rw	**Fractional Divider Selection** Selects the fractional divider to be n/32, where n is the value of FD_SEL and is in the range of 0 to 31. For example, writing 0001_B to FD_SEL selects the fractional divider to be1/32. *Note: Fractional divider has no effect if BR_VALUE = 000_H.*

Table 104 RESET of SCU_BGL1

Register Reset Type	Reset Values	Reset Short Name	Reset Mode	Note
RESET_TYPE_3	$0000\ 0000_H$	RESET_TYPE_3		

Baud Rate Timer/Reload Register, Low Byte 2

SCU_BGL2	Offset	Reset Value
Baud Rate Timer/Reload Register, Low Byte 2	$09C_H$	see Table 105

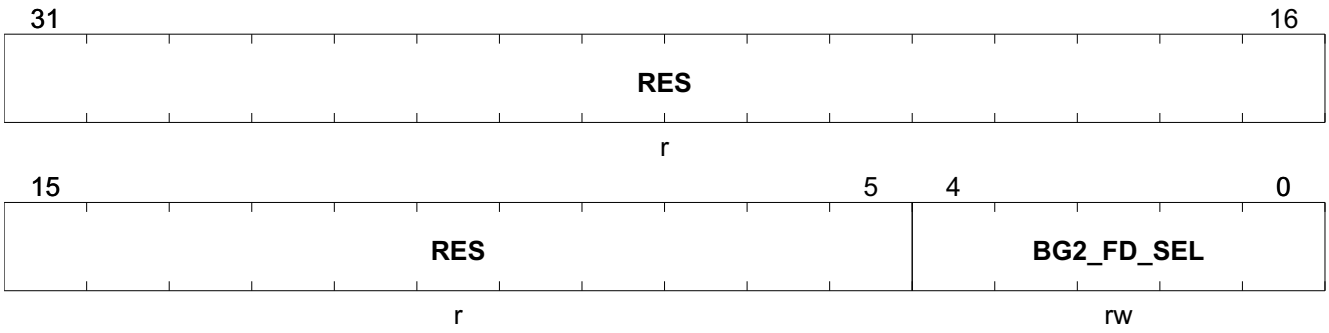

Field	Bits	Type	Description
RES	31:5	r	**Reserved** Returns 0 if read; should be written with 0.
BG2_FD_SEL	4:0	rw	**Fractional Divider Selection** Selects the fractional divider to be n/32, where n is the value of FD_SEL and is in the range of 0 to 31. For example, writing 0001_B to FD_SEL selects the fractional divider to be1/32. *Note: Fractional divider has no effect if BR_VALUE = 000_H.*

Table 105 RESET of SCU_BGL2

Register Reset Type	Reset Values	Reset Short Name	Reset Mode	Note
RESET_TYPE_3	$0000\ 0000_H$	RESET_TYPE_3		

Baud Rate Timer/Reload Register

SCU_BG1	Offset	Reset Value
Baud Rate Timer/Reload Register	090_H	see Table 106

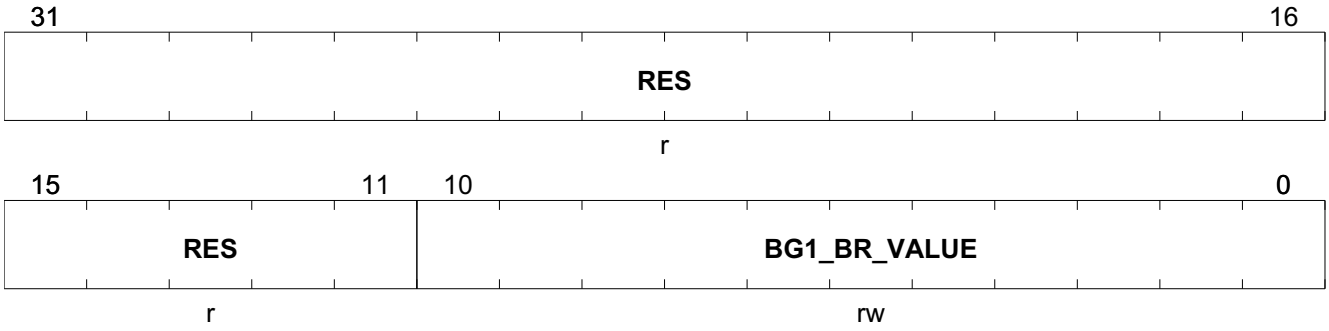

Field	Bits	Type	Description
RES	31:11	r	**Reserved** Returns 0 if read; should be written with 0.
BG1_BR_VALUE	10:0	rw	**Baud Rate Timer/Reload Value UART1** 11-bit Baud Rate Timer/Reload value. Note: If the baud rate generation is running this register shows the actual timer value The definition of the 11-bit reload value is as follows: Other bit combinations equivalent. 000_H Baud-rate timer is bypassed. 001_H 1 002_H 2 $7FE_H$ 2046 $7FF_H$ 2047

Table 106 RESET of SCU_BG1

Register Reset Type	Reset Values	Reset Short Name	Reset Mode	Note
RESET_TYPE_3	0000 0000_H	RESET_TYPE_3		

Baud Rate Timer/Reload Register

SCU_BG2	Offset	Reset Value
Baud Rate Timer/Reload Register	$0A0_H$	see Table 107

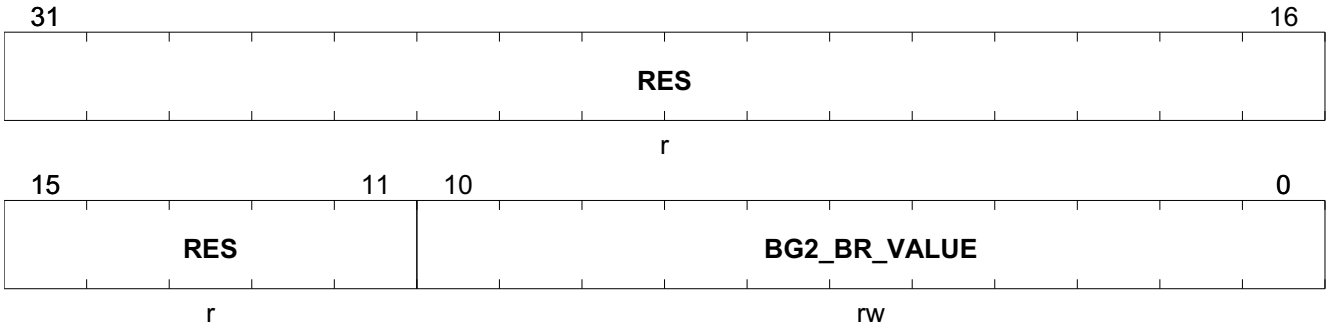

Field	Bits	Type	Description
RES	31:11	r	**Reserved** Returns 0 if read; should be written with 0.
BG2_BR_VALUE	10:0	rw	**Baud Rate Timer/Reload Value UART2** 11-bit Baud Rate Timer/Reload value. Note: If the baud rate generation is running this register shows the actual timer value The definition of the 11-bit reload value is as follows: Other bit combinations equivalent. 000_H Baud-rate timer is bypassed. 001_H 1 002_H 2 $7FE_H$ 2046 $7FF_H$ 2047

Table 107 RESET of SCU_BG2

Register Reset Type	Reset Values	Reset Short Name	Reset Mode	Note
RESET_TYPE_3	0000 0000_H	RESET_TYPE_3		

7.12 LIN Break and Sync Byte Detection

Hardware logic is implemented in the SCU to support LIN Break and Synch Byte detection. See **Chapter 19.7** for the functional description.

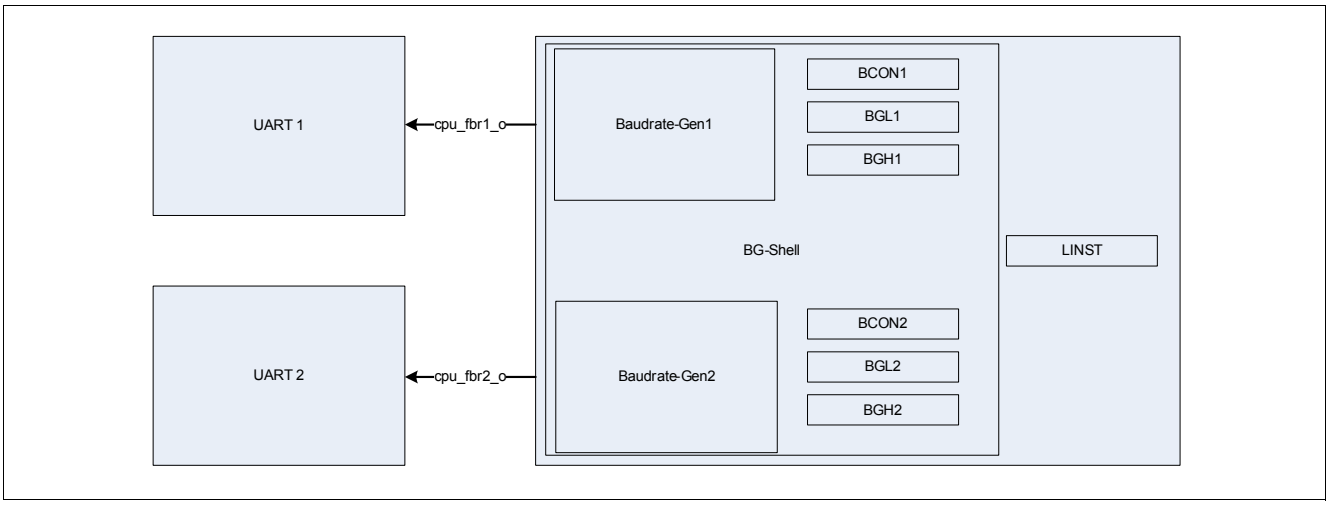

Figure 37 Structure of Baudrate Generator

7.12.1 LIN Break and Sync Byte Detection Control

7.12.1.1 LIN Break and Sync Byte Registers

LIN Status Register

SCU_LINST	Offset	Reset Value
LIN Status Register	094_H	see Table 108

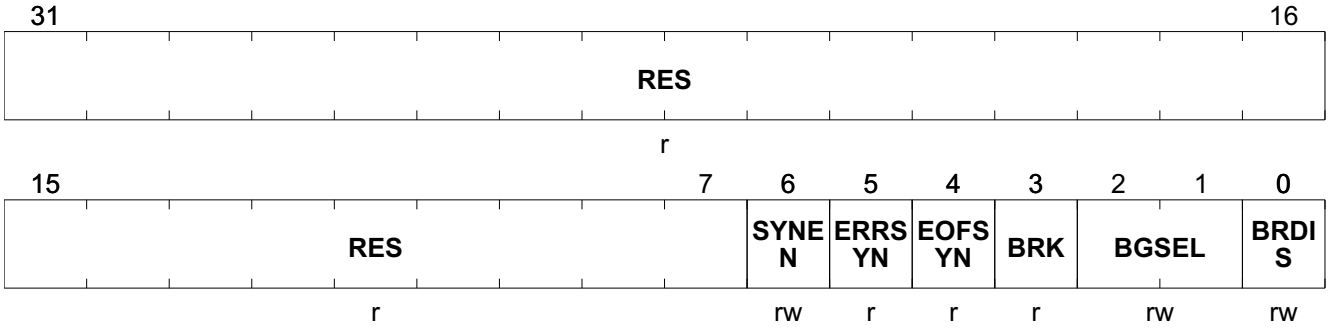

Field	Bits	Type	Description
RES	31:7	r	**Reserved** Returns 0 if read; should be written with 0.

Field	Bits	Type	Description
SYNEN	6	rw	**End of SYN Byte and SYN Byte Error Interrupts Enable** 0_B End of SYN Byte and SYN Byte Error Interrupts are not enabled. 1_B End of SYN Byte and SYN Byte Error Interrupts are enabled.
ERRSYN	5	r	**SYN Byte Error Interrupt Flag** This bit is set by hardware and can only be cleared by software. 0_B Error is not detected in SYN Byte. 1_B Error is detected in SYN Byte.
EOFSYN	4	r	**End of SYN Byte Interrupt Flag** This bit is set by hardware and can only be cleared by software. 0_B End of SYN Byte is not detected. 1_B End of SYN Byte is detected.
BRK	3	r	**Break Field Flag** This bit is set by hardware and can only be cleared by software. 0_B Break Field is not detected. 1_B Break Field is detected.
BGSEL	2:1	rw	**Baud Rate Select for Detection** For different values of BGSEL, the baud rate range for detection is defined by the following formula: f_{pclk}/(2184*2^BGSEL) < baud rate range < f_{pclk}/(72*2^BGSEL) where BGSEL = 00_B, 01_B, 10_B, 11_B. See **Table 31** for bit field BGSEL definition for different input frequencies.
BRDIS	0	rw	**Baud Rate Detection Disable** 0_B Break/Synch detection is enabled. 1_B Break/Synch detection is disabled.

Table 108 RESET of SCU_LINST

Register Reset Type	Reset Values	Reset Short Name	Reset Mode	Note
RESET_TYPE_3	$0000\ 0000_H$	RESET_TYPE_3		

LIN Status Clear Register

SCU_LINSCLR	Offset	Reset Value
LIN Status Clear Register	$0A4_H$	see Table 109

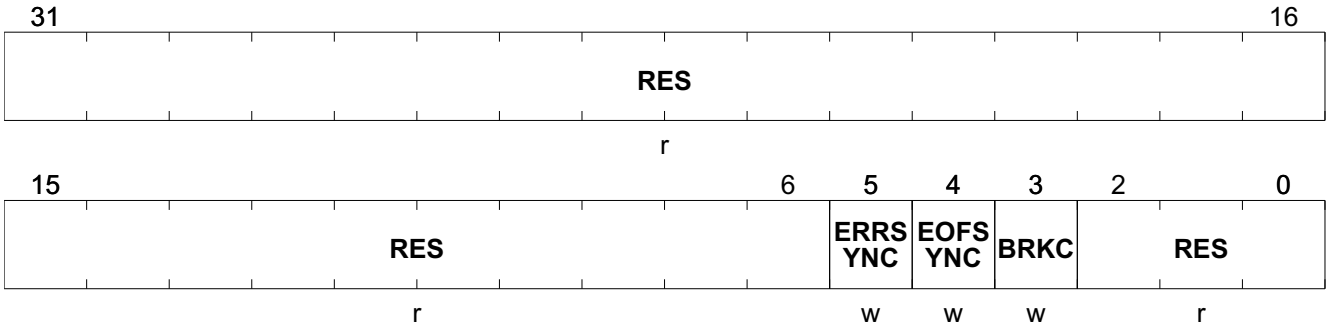

Field	Bits	Type	Description
RES	31:6	r	**Reserved** Returns 0 if read; should be written with 0.
ERRSYNC	5	w	**SYN Byte Error Interrupt Flag** This bit is set by software and can only be cleared by hardware. 0_B Error in SYN Byte not cleared. 1_B Error in SYN Byte cleared.
EOFSYNC	4	w	**End of SYN Byte Interrupt Flag Clear** This bit is set by software and can only be cleared by hardware. 0_B End of SYN Byte is not cleared. 1_B End of SYN Byte is cleared.
BRKC	3	w	**Break Field Flag Clear** This bit is set by software and can only be cleared by hardware. 0_B Break Field is not cleared. 1_B Break Field is cleared.
RES	2:0	r	**Reserved** Returns 0 if read; should be written with 0.

Table 109 RESET of SCU_LINSCLR

Register Reset Type	Reset Values	Reset Short Name	Reset Mode	Note
RESET_TYPE_3	$0000\ 0000_H$	RESET_TYPE_3		

7.13 Error Detection and Correction Control for Memories

This section defines the registers used for error detection and correction control of memories – namely RAM and NVM, which support this function.

7.13.1 Error Detection and Correction Control Register

The EDCCON register determines the generation of an NMI due to double bit ECC error when read these memories.

Error Detection and Correction Control Register

SCU_EDCCON	Offset	Reset Value
Error Detection and Correction Control Register	$0D4_H$	see Table 110

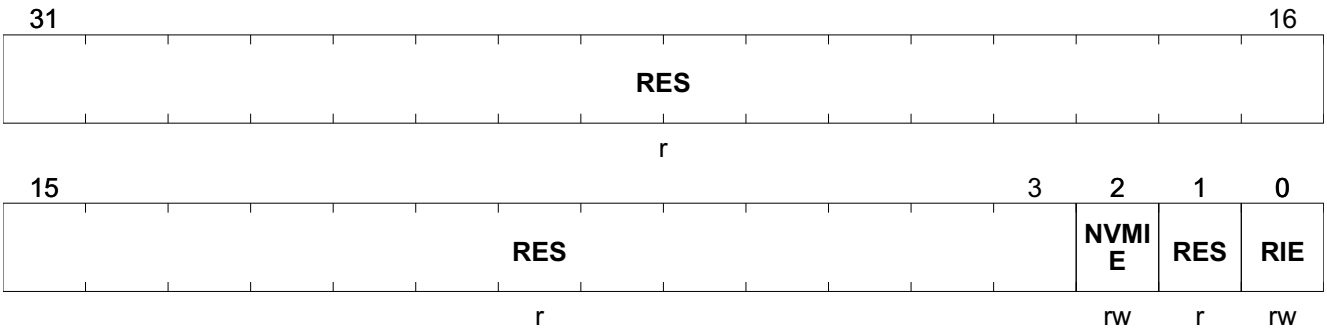

Field	Bits	Type	Description
RES	31:3	r	**Reserved** Returns 0 if read; should be written with 0.
NVMIE	2	rw	**NVM Double Bit ECC Error Interrupt Enable** 0_B No NMI is generated when a double bit ECC error occurs reading NVM. 1_B An NMI is generated when a double bit ECC error occurs reading NVM.
RES	1	r	**Reserved** Returns 0 if read; should be written with 0.
RIE	0	rw	**RAM Double Bit ECC Error Interrupt Enable** 0_B No NMI is generated when a double bit ECC error occurs reading RAM. 1_B An NMI is generated when a double bit ECC error occurs reading RAM.

Table 110 RESET of SCU_EDCCON

Register Reset Type	Reset Values	Reset Short Name	Reset Mode	Note
RESET_TYPE_3	$0000\ 0000_H$	RESET_TYPE_3		

7.13.2 Error Detection and Correction Status Register

The EDCSTAT register contains the status flags of ECC errors when read these memories. The corresponding flags for the IRAM are not more necessary, because IRAM was removed.

Error Detection and Correction Status Register

SCU_EDCSTAT	Offset	Reset Value
Error Detection and Correction Status Register	$0D8_H$	see Table 111

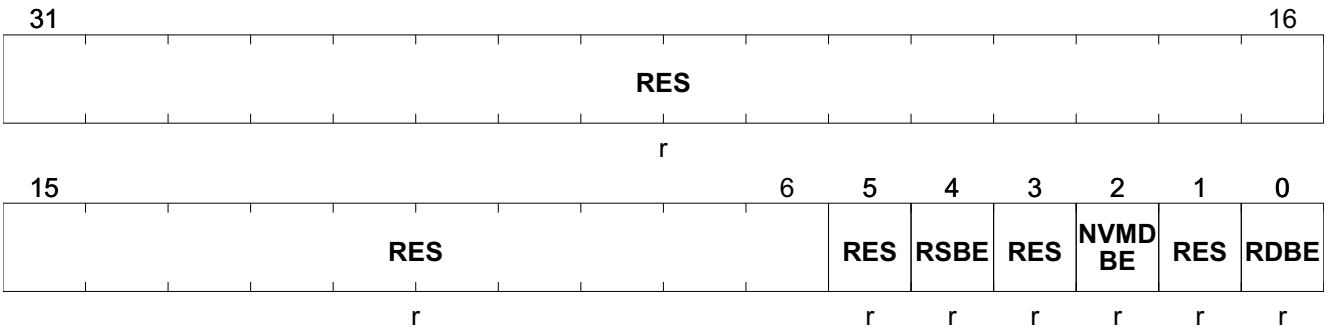

Field	Bits	Type	Description
RES	31:6	r	**Reserved** Returns 0 if read; should be written with 0.
RES	5	r	**Reserved** Returns 0 if read; should be written with 0.
RSBE	4	r	**RAM Single Bit Error** This bit is set by hardware and can be cleared only by software. 0_B No single bit error on RAM has occurred. 1_B A single bit error on RAM has occurred.
RES	3	r	**Reserved** Returns 0 if read; should be written with 0.
NVMDBE	2	r	**NVM Double Bit Error** This bit is set by hardware and can be cleared only by software. 0_B No double bit error on NVM has occurred. 1_B A double bit error on NVM has occurred.
RES	1	r	**Reserved** Returns 0 if read; should be written with 0.
RDBE	0	r	**RAM Double Bit Error** This bit is set by hardware and can be cleared only by software. 0_B No double bit error on RAM has occurred. 1_B A double bit error on RAM has occurred.

Table 111 RESET of SCU_EDCSTAT

Register Reset Type	Reset Values	Reset Short Name	Reset Mode	Note
RESET_TYPE_4	0000 0000_H	RESET_TYPE_4		

Table 112 Reset Value of Register SCU_EDCSTAT

Reset Source	Reset Value
Power-On Reset/Brown-out Reset/WDT1 Reset/Wake-up Reset/Hardware Reset	0000 0000_B
WDT/Soft Reset	UUUU $UUUU_B$

Error Detection and Correction Status Clear Register

SCU_EDCSCLR	Offset	Reset Value
Error Detection and Correction Status Clear Register	$10C_H$	see Table 113

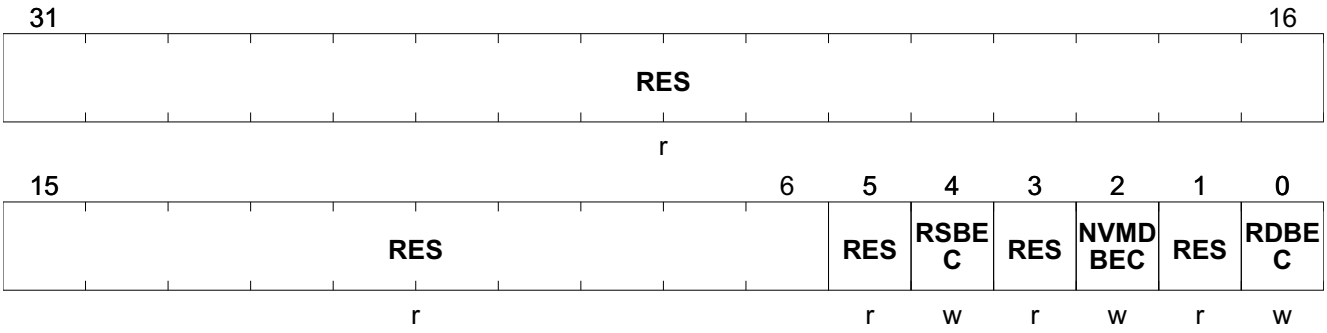

Field	Bits	Type	Description
RES	31:6	r	**Reserved** Returns 0 if read; should be written with 0.
RES	5	r	**Reserved** Returns 0 if read; should be written with 0.
RSBEC	4	w	**RAM Single Bit Error Clear** This bit is set by software and can be cleared only by hardware. 0_B A single bit error on RAM is not cleared. 1_B A single bit error on RAM is cleared.
RES	3	r	**Reserved** Returns 0 if read; should be written with 0.
NVMDBEC	2	w	**NVM Double Bit Error Clear** This bit is set by software and can be cleared only by hardware. 0_B A double bit error on NVM is not cleared. 1_B A double bit error on NVM is cleared.

Field	Bits	Type	Description
RES	1	r	**Reserved** Returns 0 if read; should be written with 0.
RDBEC	0	w	**RAM Double Bit Error Clear** This bit is set by software and can be cleared only by hardware. 0_B A double bit error on RAM is not cleared. 1_B A double bit error on RAM is cleared.

Table 113 RESET of SCU_EDCSCLR

Register Reset Type	Reset Values	Reset Short Name	Reset Mode	Note
RESET_TYPE_3	$0000\ 0000_H$	RESET_TYPE_3		

Table 114 Reset Value of Register SCU_EDCSCLR

Reset Source	Reset Value
Power-On Reset/Brown-out Reset/WDT1 Reset/Wake-up Reset/Hardware Reset	$0000\ 0000_B$
WDT/Soft Reset	$UUUU\ UUUU_B$

7.14 Miscellaneous Control

This module consists of the Bit-Protection Scheme and general system control SFRs.

7.14.1 Bit Protection Register

The Bit-Protection Scheme disallows direct software writing of selected bits (i.e. Protected bits) by the SFR PASSWD. When the bit field MODE is 11_B, writing 10011_B to the bit field PASS opens access to writing of all protected bits and writing 10101_B to the bit field PASS closes access to writing of all protected bits. Note that access is opened for maximum 32 CCLKs if the “close access” password is not written. If “open access” password is written again before the end of 32 CCLK cycles, there will be a recount of 32 CCLK cycles.

Note: It is recommended to disable interrupts before writing to this register, otherwise interrupts might delay the write access the protected bits in a way that the 32-cycles-access-window is closed already.

Password Register

SCU_PASSWD	Offset	Reset Value
Password Register	$0AC_H$	see Table 115

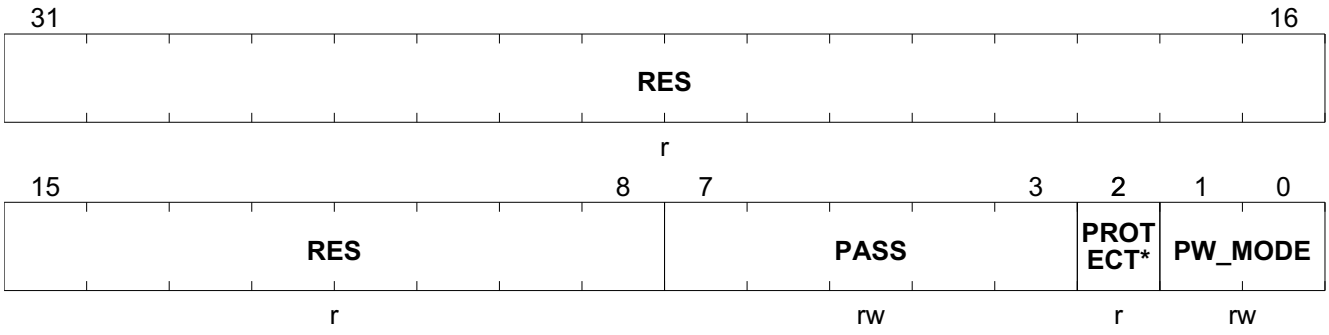

Field	Bits	Type	Description
RES	31:8	r	**Reserved** Returns 0 if read; should be written with 0.
PASS	7:3	rw	**Password Bits** The Bit-Protection Scheme only recognizes three patterns. This Bit field is always read as ‘0’. 11000_B Enables writing of the bit field MODE. 10011_B Opens access to writing of all protected bits. 10101_B Closes access to writing of all protected bits.
PROTECT_S	2	r	**Bit-Protection Signal Status Bit** This bit shows the status of the protection. 0_B Software is able to write to all protected bits. 1_B Software is unable to write to any protected bits.

Field	Bits	Type	Description
PW_MODE	1:0	rw	**Bit-Protection Scheme Control Bit** These two bits cannot be written directly. To change the value between 11_B and 00_B, the bit field PASS must be written with 11000_B, only then the MODE[1:0] will be registered. Other bit combinations: Scheme Enabled 00_B Scheme Disabled 11_B Scheme Enabled (default)

Table 115 RESET of SCU_PASSWD

Register Reset Type	Reset Values	Reset Short Name	Reset Mode	Note
RESET_TYPE_3	$0000\ 0007_H$	RESET_TYPE_3		

The PASSWD register and the registers which contain protected bits are located in page 2 of the SCU SFR address map. The list of protected bits is shown in **Table 116**.

Table 116 List of Protected Bits

Register	Bit Field
SCU_SYSCON0	SYSCLKSEL
SCU_RSTCON	LOCKUP_EN
	LOCKUP
SCU_OSC_CON	OSCSS
	XPD
SCU_PLL_CON	NDIV
SCU_CMCON1	K1DIV
	K2DIV
	PDIV
SCU_CMCON2	PBA0CLKREL
SCU_APCLK_CTRL	CLKWDT_IE
SCU_APCLK	BGCLK_DIV
	BGCLK_SEL
SCU_PMCON0	SD
	PD
	SL

7.14.2 System Control and Status Registers

The system startup status register provide information to the user about the system initialisation with the user programmable 100 TP Page at startup. These register is written by firmware.

This register SYS__STS is reset by reset_type_4.

System Startup Status Register

It contains the main system control and status bits.

SCU_SYS_STRTUP_STS	Offset	Reset Value
System Startup Status Register	074_H	see Table 117

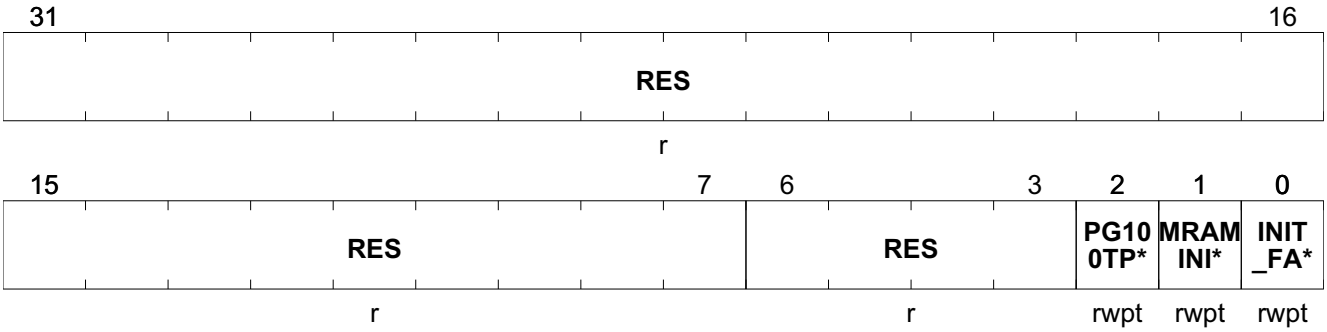

Field	Bits	Type	Description
RES	31:7	r	**Reserved** Returns 0 if read; should be written with 0.
RES	6:3	r	**Reserved** Returns 0 if read; should be written with 0.
PG100TP_CHKS_ERR	2	rwpt	**100 TP Page Checksum Error** Initialization status of trimming parameters from NVM. 0: ok, initialisation of trimming parameters from NMV was successful (checksum was correct). 1: nok, initialisation of trimming parameter from NMV was not successful (checksum was not correct). As a backup default values form Boot-ROM are used. *Note: this bit is affected by every RESET_TYPE*
MRAMINITSTS	1	rwpt	**Map RAM Initialisation Status** Status of Map RAM initialisation. 0: no fail = Map RAM initialisation was successful. 1: fail = Map RAM initialisation was not successful. *Note: this bit is affected by every RESET_TYPE*
INIT_FAIL	0	rwpt	**Initialization at startup failed** This bit is a logical OR between PLL_LOCK failure, Map RAM initialisation failure and trimming values checksum error. 0: no error= no initialisation error at startup. 1: error= initialisation error at startup. *Note: this bit is affected by every RESET_TYPE*

Table 117 RESET of SCU_SYS_STRTUP_STS

Register Reset Type	Reset Values	Reset Short Name	Reset Mode	Note
RESET_TYPE_3	$0000\ 0000_H$	RESET_TYPE_3		
RESET_TYPE_4	$0000\ 0000_H$	RESET_TYPE_4		

NVM Protection Status Register

This register reflects the NVM Protection Status. It is written by firmware only.

SCU_NVM_PROT_STS	Offset	Reset Value
NVM Protection Status Register	$0E0_H$	see Table 118

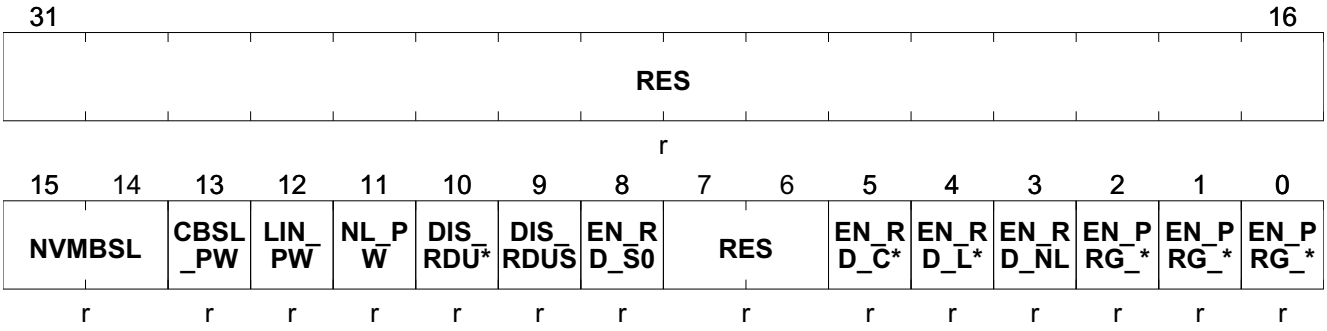

Field	Bits	Type	Description
RES	31:16	r	**Reserved** Returns 0 if read; should be written with 0.
NVMBSL	15:14	r	**CBSL Region Size Definition** Size definition of Customer BSL Region 00_B CBSL Size is 4K 01_B CBSL Size is 8K 10_B CBSL Size is 12K 11_B CBSL Size is 16K
CBSL_PW	13	r	**Status of CBSL Region Password / Protection** 0_B CBSL Region Password is not installed; CBSL region is not protected. 1_B CBSL Region Password is installed; CBSL region is protected.
LIN_PW	12	r	**Status of Linear Region Password / Protection** 0_B Linear Region Password is not installed; Linear region is not protected. 1_B Linear Region Password is installed; Linear region is protected.
NL_PW	11	r	**Status of Non-Linear Region Password / Protection** 0_B Non-Linear Region Password is not installed; Linear region is not protected. 1_B Non-Linear Region Password is installed; Linear region is protected.
DIS_RDUS_S0	10	r	**Configuration of NVM Read Protection for Sector 0 with EN_RD_S0 = 0** 0_B only active when nvm_read_S0_unsafe_i = 1 and not for nvm_read_S0_unsafe_i = 0 1_B independent from nvm_read_S0_unsafe_i; Also write accesess to Sector 0 are prevented

Field	Bits	Type	Description
DIS_RDUS	9	r	**Configuration of NVM Read Protection for Sector 1...n with EN_RD_* = 0** 0_B only active when nvm_read_unsafe_i = 1 and not for nvm_read_unsafe_i = 0 1_B independent from nvm_read_unsafe_i; Also write accesess to Sector 1...n are prevented
EN_RD_S0	8	r	**NVM Read Protection for Sector 0** 0_B The data in sector 0 can not be read over AHB-Lite Interface 1_B The data in sector 0 can be read over AHB-Lite Interface
RES	7:6	r	**Reserved** Returns 0 if read; should be written with 0.
EN_RD_CBSL	5	r	**NVM Read Protection of Data in CBSL Region** 0_B The data in region defined by NVMBSL can not be read 1_B The data in region defined by NVMBSL sectors of can be read
EN_RD_LIN	4	r	**NVM Read Protection of Data in Linear Sectors** 0_B The data in sectors of the linearly mapped area can not be read 1_B The data in sectors of the linearly mapped area can be read
EN_RD_NL	3	r	**NVM Read Protection of Data in Non-Linear Sectors** 0_B The data in sectors of the non-linearly mapped area can not be read 1_B The data in sectors of the non-linearly mapped area can be read
EN_PRG_CBSL	2	r	**NVM Protection of Data in CBSL Region** 0_B The data in region defined by NVMBSL can not be changed 1_B The data in region defined by NVMBSL can be changed (erased or written)
EN_PRG_LIN	1	r	**NVM Protection of Data in Linear Sectors** 0_B The data in sectors of the linearly mapped area can not be changed 1_B The data in sectors of the linearly mapped area can be changed (erased or written)
EN_PRG_NL	0	r	**NVM Protection of Data in Non-Linear Sectors** 0_B The data in sectors of the non-linearly mapped area can not be changed 1_B The data in sectors of the non-linearly mapped area can be changed (erased or written)

Table 118 RESET of SCU_NVM_PROT_STS

Register Reset Type	Reset Values	Reset Short Name	Reset Mode	Note
RESET_TYPE_4	$0000\ 0000_H$	RESET_TYPE_4		

Memory Access Status Register

This register reflects the Memory Access Status of all System Memories. Software can only clear this register.

SCU_MEM_ACC_STS	Offset	Reset Value
Memory Access Status Register	$0E4_H$	see Table 119

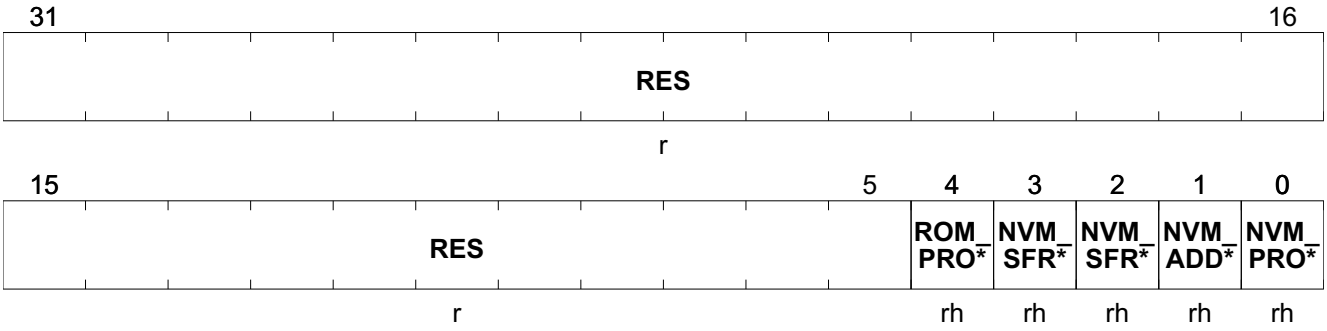

Field	Bits	Type	Description
RES	31:5	r	**Reserved** Returns 0 if read; should be written with 0.
ROM_PROT_ERR	4	rh	**ROM Access Protection** 0_B No Protection error 1_B Protection error
NVM_SFR_ADDR_ERR	3	rh	**NVM SFR Address Protection** 0_B No Protection error 1_B Protection error
NVM_SFR_PROT_ERR	2	rh	**NVM SFR Access Protection** 0_B No Protection error 1_B Protection error
NVM_ADDR_ERR	1	rh	**NVM Address Protection** 0_B No Protection error 1_B Protection error
NVM_PROT_ERR	0	rh	**NVM Access Protection** 0_B No Protection error 1_B Protection error

Table 119 RESET of SCU_MEM_ACC_STS

Register Reset Type	Reset Values	Reset Short Name	Reset Mode	Note
RESET_TYPE_3	$0000\ 0000_H$	RESET_TYPE_3		

Identity Register

The Identity Register identifies the product and versioning.

SCU_ID	Offset	Reset Value
Identity Register	$0A8_H$	see Table 120

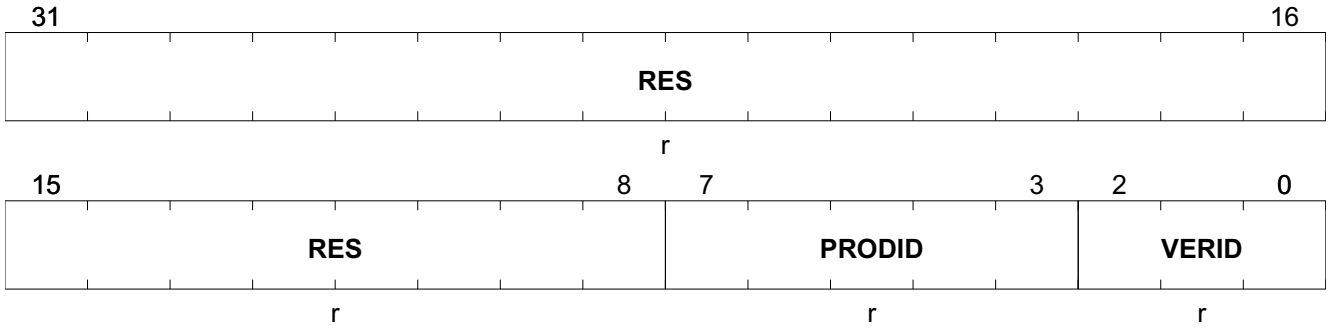

Field	Bits	Type	Description
RES	31:8	r	**Reserved** Returns 0 if read; should be written with 0.
PRODID	7:3	r	**Product ID** 10000_B
VERID	2:0	r	**Version ID** Defines the stepping code of the device. 001_B 010_B

Table 120 RESET of SCU_ID

Register Reset Type	Reset Values	Reset Short Name	Reset Mode	Note
RESET_TYPE_3	$0000\ 0080_H$	RESET_TYPE_3		

Memory Status Register

The Memory Status Register can be used in two ways. Upon the completion of the Boot ROM startup following a reset, the register stores the NVM initialization status. Subsequently, the register can be used by the user code to store the status of the NVM program and emergency program operation status.

For Boot ROM to indicate NVM initialization status upon completion of startup:

SCU_MEMSTAT	Offset	Reset Value
Memory Status Register	$0DC_H$	see Table 121

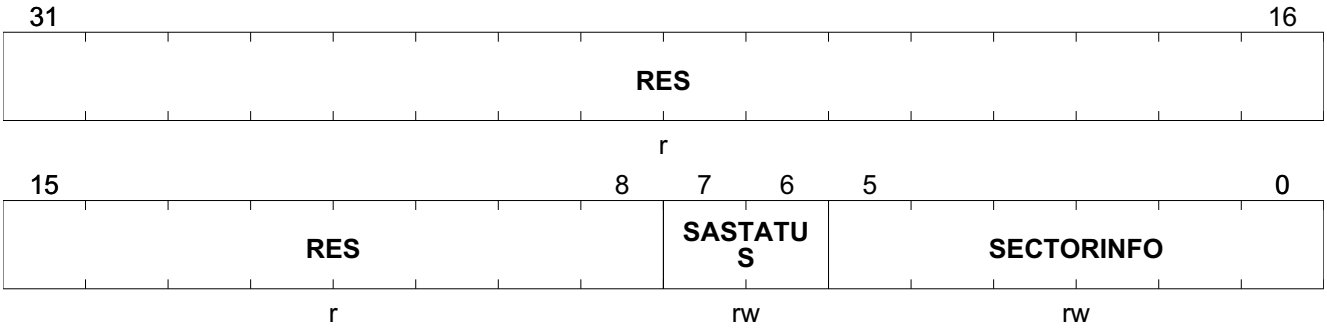

Field	Bits	Type	Description
RES	31:8	r	**Reserved** Returns 0 if read; should be written with 0.
SASTATUS	7:6	rw	**Service Algorithm Status** 00_B Depending on SECTORINFO, there are two possible outcomes: For SECTORINFO = 00_H, NVM initialization is successful and no SA is executed. For SECTORINFO = values other than 00_H, SA execution is successful and only one map error is fixed. 01_B SA execution is successful. More than one mapping error is fixed. $1x_B$ SA execution is not successful. Map error exists in the mapped sector.
SECTORINFO	5:0	rw	**Sector Information** 01_H to 10_H, which represent the different sector addresses. For values not within this range, the data will be considered invalid. Once the SA has been executed, regardless of the execution status, the last accessed sector information will be stored here.

Table 121 RESET of SCU_MEMSTAT

Register Reset Type	Reset Values	Reset Short Name	Reset Mode	Note
RESET_TYPE_3	$0000\ 0000_H$	RESET_TYPE_3		

Emergency and Program Operation Status Register

This register indicates the emergency and program operation status.

For Boot ROM to indicate NVM initialization status upon completion of startup:

SCU_EMOP	Offset	Reset Value
Emergency and Program Operation Status Register	$0CC_H$	see Table 122

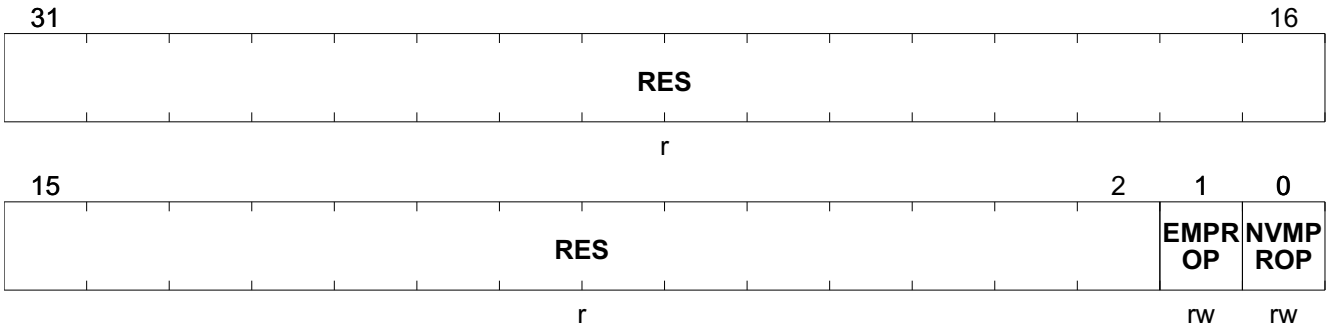

Field	Bits	Type	Description
RES	31:2	r	**Reserved** Returns 0 if read; should be written with 0.
EMPROP	1	rw	**Emergency Program Operation Status Bit** This bit is used to monitor the status of the emergency program operation 0_B No emergency program operation is started 1_B Emergency program operation is started
NVMPROP	0	rw	**NVM Program Operation Status Bit** This bit is used to monitor the status of the NVM program operation 0_B No NVM program operation is started 1_B NVM program operation is started.

Table 122 RESET of SCU_EMOP

Register Reset Type	Reset Values	Reset Short Name	Reset Mode	Note
RESET_TYPE_4	$0000\ 0000_H$	RESET_TYPE_4		

8 System Control Unit - Power Modules (SCU-PM)

8.1 Description of the Power Modules System Control Unit

The System Control Unit of the power modules consists of the following sub-modules:

- Clock Watchdog Unit (CWU): supervision of all power modules relevant clocks with NMI signalling.
- Interrupt Control Unit (ICU): all system relevant interrupt flags and status flags.
- Power Control Unit (PCU): takes over control when device enters and exits Sleep and Stop Mode.
- External Watchdog (WDT1): independent system watchdog to monitor system activity

8.2 Introduction

8.2.1 Block Diagram

The System Control Unit of the power modules consists of the sub-modules in the figure shown below:

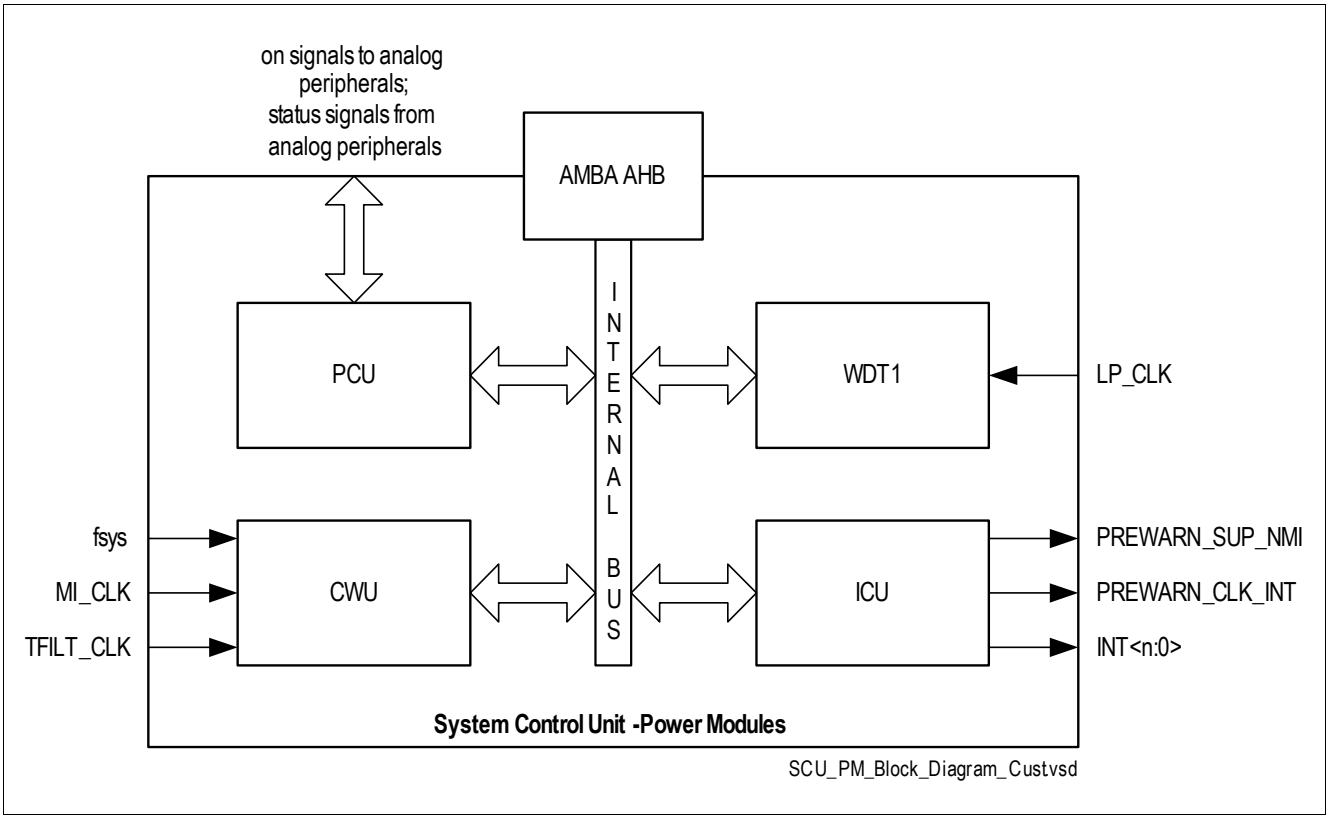

Figure 38 Block diagram of System Control Unit - Power Modules

IO description of SCU_PM:

CWU (Clock Watchdog Unit)

- check of f_{sys} = system frequency: output of PLL
- check of MI_CLK = measurement interface clock (analog clock): derived out of f_{sys} by division factors 1/2/3/4
- check of TFILT_CLK = clock used for digital filters: derived out of f_{sys} by configurable division factors

ICU (Interrupt Control Unit)

- PREWARN_SUP_NMI = generation of Prewarn-Supply NMI
- PREWARN_CLK_INT = generation of Prewarn-Clock Watchdog NMI
- INT = generation of MISC interrupts

8.3 Clock Watchdog Unit (CWU)

There are two clock watchdogs available. One main purpose of them, is to monitor the derived switched capacitor clocks, which are used for analog module operation. If the clocks are not in the required range, a proper functionality of those modules is not given.

The following chapter describes the functionality and the configuration possibilities of these clock watchdogs.

8.3.1 Fail Safe Functionality of Clock Generation Unit (Clock Watchdog)

The Clock Generation Unit provides also fail safe functionalities, which are related to the input clock, the generated clocks and the clock settings. Those are:

- **MI_CLK** and **TFILT_CLK** are out of Range: MI Clock settings for f_{sys}, MI_CLK and TFILT_CLK Clock settings are out of required range and as a result the analog functionalities cannot be guaranteed. This failure triggers the clock watchdog NMI. The current status can be seen in the corresponding registers APCLK1 (in SCU) for the **MI_CLK** and APCLK2 (in SCU) for the **TFILT_CLK**.
- **Loss of clock:** When there is a loss of clock in the system, there is no possibility for the software to react upon this situation, like to enter a fail safe mode or switch to another backup clock source. For this purpose there is a clock watchdog implemented in the system which monitors the f_{sys} and in case of this emergency situation, disables all critical system functions, which are:
  - Low Sides
  - High Sides
  - LIN

As shown in **Figure 39** all analog clocks are derived from **MI_CLK**. This clock structure requires to place a monitor on this clock, because f_{sys} and therefore **MI_CLK** are adjustable in a wide range (see also Chapter **System Control Unit - CGU**). As an important clock, also the TFILT_CLK is monitored by a clock watchdog. This clock watchdogs have an adjustable lower and upper limits including hysteresis. The placement of the clock watchdogs in the clock structure is sketched below:

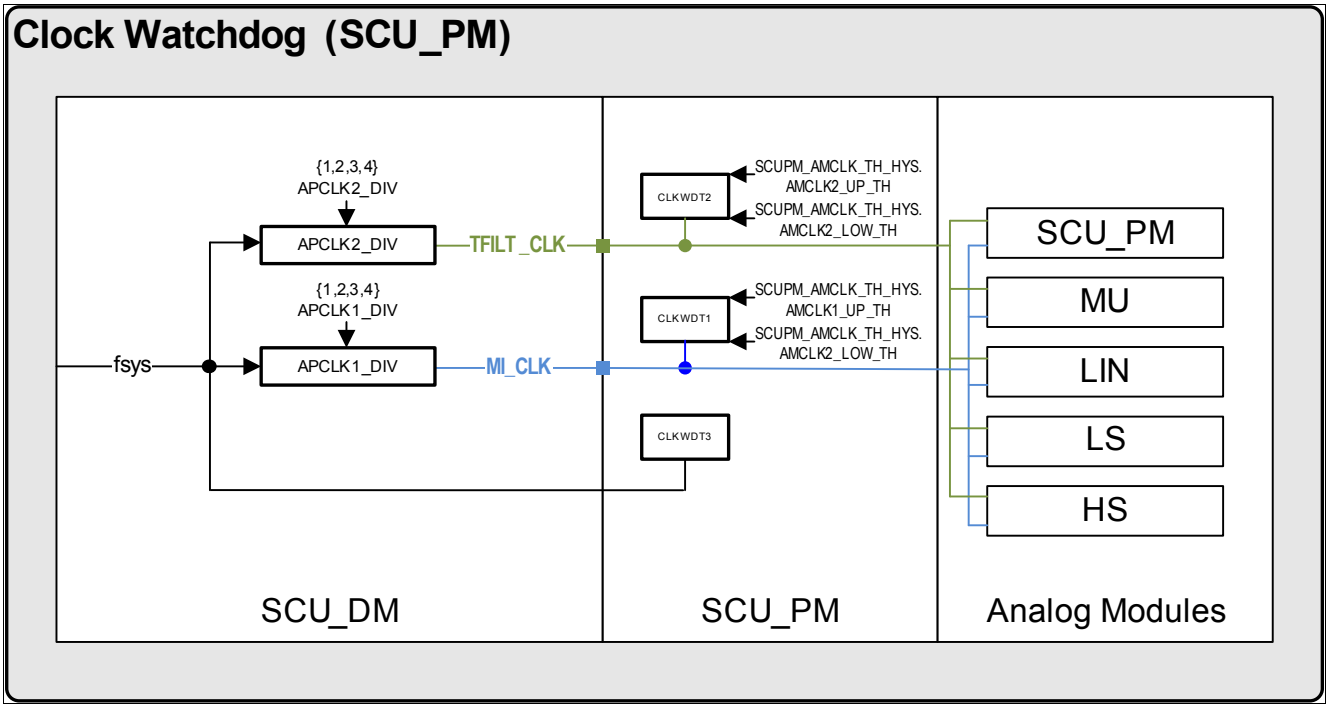

Figure 39 Block diagram of CGU including Clock Watchdogs

8.3.1.1 Functional Description of Clock Watchdog Module

The clock watchdog module consists of a counter. This counter monitors the number of system clocks within a defined time window. The duration of the time window is defined by a clock (**LP_CLK**), which is independent from the monitored system clock (**MI_CLK**). If the required number of clock cycles is not reached within this time window an clock watchdog NMI will be issued.

In case the clock watchdog NMI will be issued, indicating that the clock is not within the required frequency range, then the user has different options to overcome this situation:

- stay on mi_clk but reconfigure PLL to re-gain the required clock frequency. This would be the most time consuming measure to avoid emergency shutdown of the above listed modules.
- switch to divider factors 2, 3 and 4 to try to come back to specified frequency range.
- switch to LP_CLK, which also can be divided by factor 2, 3 and 4. This is the fastest option which allows the user to operate with a well defined backup clock rate. After this has been done the user can start investigating the root cause of the issued clock watchdog NMI, while operating on **LP_CLK**.

The register chapter below includes all necessary flags for setting up the analog module clock and monitoring its status during operation.

8.3.2 Clock Generation Unit Register

The analog module clock generation unit is fully controllable by the register described in this chapter.

Table 123 shows the module base addresses.

Table 123 Register Address Space

Module	Base Address	End Address	Note
SCUPM	50006000_H	$50006FFF_H$	SCU_PM

Table 124 Register Overview

Register Short Name	Register Long Name	Offset Address	Reset Value
Clock Generation Unit Register,			
SCUPM_AMCLK_FREQ_STS	Analog Module Clock Frequency Status Register	00_H	00000000_H
SCUPM_AMCLK_CTRL	Analog Module Clock Control Register	04_H	$0000\ 0001_H$
SCUPM_AMCLK_TH_HYS	Analog Module Clock Limit Register	$0C_H$	$D4E1\ 94B3_H$
SCUPM_STCALIB	System Tick Calibration Register	$6C_H$	$0000\ 0000_H$

The registers are addressed wordwise.

Analog Module Clock Frequency Status Register

SCUPM_AMCLK_FREQ_STS	Offset	Reset Value
Analog Module Clock Frequency Status Register	00_H	see Table 125

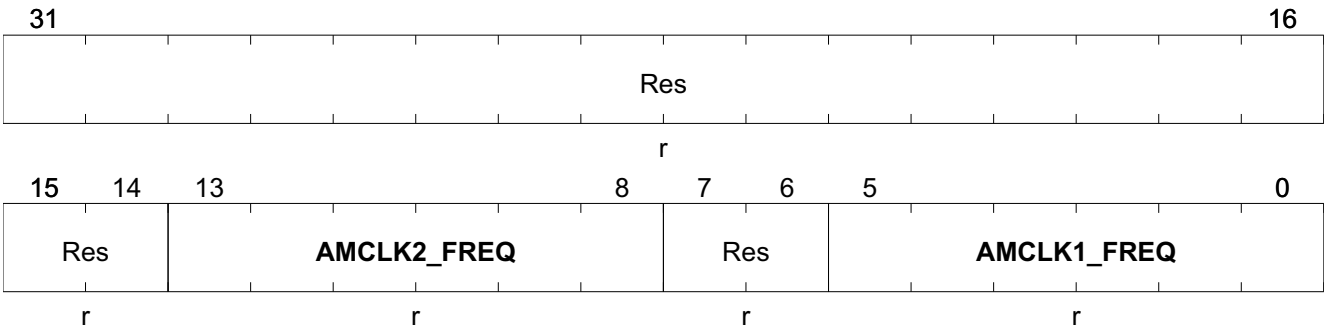

Field	Bits	Type	Description
Res	31:16	r	**Reserved** Always read as 0
Res	15:14	r	**Reserved** Always read as 0

Field	Bits	Type	Description
AMCLK2_FREQ	13:8	r	**Current frequency of Analog Module Clock 2 (TFILT_CLK)** 0.09375 Mhz * AMCLK2_FREQ
Res	7:6	r	**Reserved** Always read as 0
AMCLK1_FREQ	5:0	r	**Current frequency of Analog Module Clock System Clock (MI_CLK)** 0.75 Mhz * AMCLK1_FREQ

Table 125 RESET of SCUPM_AMCLK_FREQ_STS

Register Reset Type	Reset Values	Reset Short Name	Reset Mode	Note
RESET_TYPE_4	00000000_H	RESET_TYPE_4		

Analog Module Clock Control Register

SCUPM_AMCLK_CTRL	Offset	Reset Value
Analog Module Clock Control Register	**04_H**	**see Table 126**

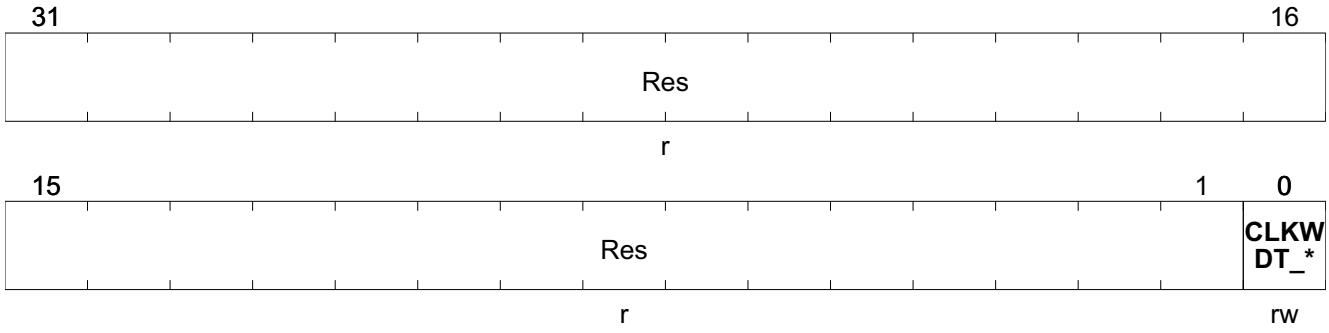

Field	Bits	Type	Description
Res	31:1	r	**Reserved** Always read as 0
CLKWDT_PD_N	0	rw	**Clock Watchdog Powerdown** 0_B **DISABLE** Clock Watchdog disabled 1_B **ENABLE** Clock Watchdog enabled

Table 126 RESET of SCUPM_AMCLK_CTRL

Register Reset Type	Reset Values	Reset Short Name	Reset Mode	Note
RESET_TYPE_4	00000001_H	RESET_TYPE_4		

Analog Module Clock Limit Register

SCUPM_AMCLK_TH_HYS	Offset	Reset Value
Analog Module Clock Limit Register	**$0C_H$**	**see Table 127**

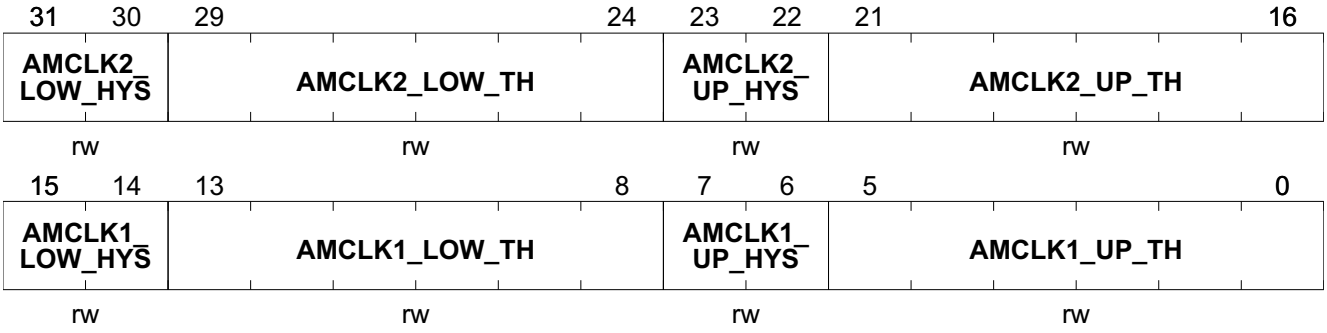

Field	Bits	Type	Description
AMCLK2_LOW_HYS	31:30	rw	**Analog Module Clock 2 (TFILT_CLK) Lower Hysteresis**
AMCLK2_LOW_TH	29:24	rw	**Analog Module Clock 2 (TFILT_CLK) Lower Limit Threshold** 0.09375 Mhz * AMCLK2_LOW_TH
AMCLK2_UP_HYS	23:22	rw	**Analog Module Clock 2 (TFILT_CLK) Upper Hysteresis**
AMCLK2_UP_TH	21:16	rw	**Analog Module Clock 2 (TFILT_CLK) Upper Limit Threshold** 0.09375 Mhz * AMCLK2_UP_TH
AMCLK1_LOW_HYS	15:14	rw	**Analog Module Clock 1 (MI_CLK) Lower Hysteresis**
AMCLK1_LOW_TH	13:8	rw	**Analog Module Clock 1 (MI_CLK) Lower Limit Threshold** 0.75 Mhz * AMCLK1_LOW_TH
AMCLK1_UP_HYS	7:6	rw	**Analog Module Clock 1 (MI_CLK) Upper Hysteresis**
AMCLK1_UP_TH	5:0	rw	**Analog Module Clock 1 (MI_CLK) Upper Limit Threshold** 0.75 Mhz * AMCLK1_UP_TH

Table 127 RESET of SCUPM_AMCLK_TH_HYS

Register Reset Type	Reset Values	Reset Short Name	Reset Mode	Note
RESET_TYPE_4	$D4E194B3_H$	RESET_TYPE_4		

System Tick Calibration Register

SCUPM_STCALIB	Offset	Reset Value
System Tick Calibration Register	$6C_H$	see Table 128

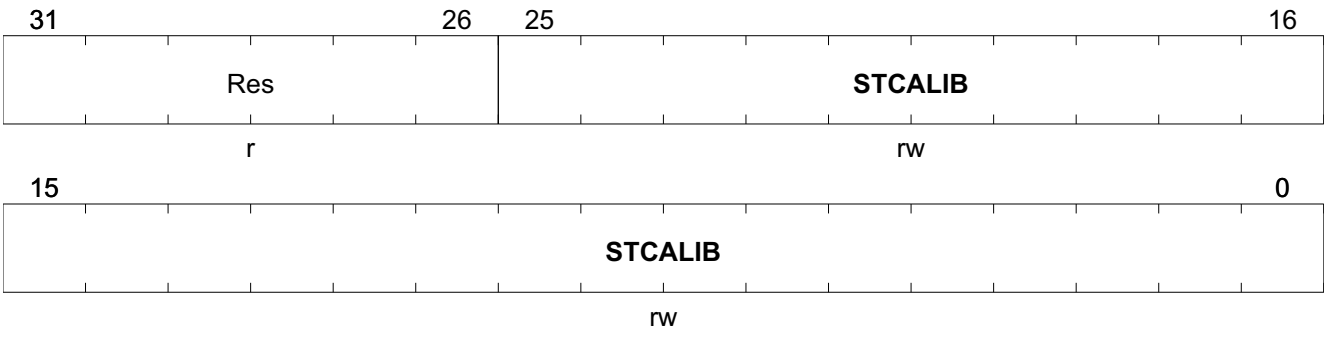

Field	Bits	Type	Description
Res	31:26	r	**Reserved** Always read as 0
STCALIB	25:0	rw	**System Tick Calibration** [25]: Noref [24] Skew [23:0] Reload value to use for 10ms (100 Hz) timing STCALIB[23:0] = HCLK (in Hz) / 100 Hz - 1, e.g. 0x7A11F

Table 128 RESET of SCUPM_STCALIB

Register Reset Type	Reset Values	Reset Short Name	Reset Mode	Note
RESET_TYPE_4	00000000_H	RESET_TYPE_4		

8.4 Interrupt Control Unit (ICU)

The Subblock Interrupt Control Unit (ICU) of the System Control Unit - Power Modules (SCU_PM) is responsible for controlling and generating all analog peripheral relevant interrupts. Those analog interrupts are presented to the NVIC nodes 13-24 and NMI. Those are:

- **PREWARN_SUP_NMI:** combines all supply relevant interrupts to NMI.
- **Analog Module Interrupts:** combines all analog modules related interrupts.

The following two chapters describe the structure of the interrupt nodes.

8.4.1 Structure of PREWARN_SUP_NMI

This interrupt groups all system supply relevant interrupts. They can be divided into two groups:

- **voltages monitored by the Measurement Unit and 10-Bit ADC.** The supply voltages VS, VBAT_SENSE, VDDP and VDDC are monitored by the Measurement Unit and the 10-Bit ADC module. The Measurement Unit can be considered as an independent monitoring instance for external supply voltages and internal voltages generated by PMU. This monitoring is done with an independent reference and supply voltage to ensure fail safe operation.
- **voltages monitored by measurement functions of the PMU:** The PMU itself is checking its output voltages. Here failures due to undervoltage (overload), overvoltage and overcurrent are detected.

The **Figure 40** shows the structure of the **PREWARN_SUP**:

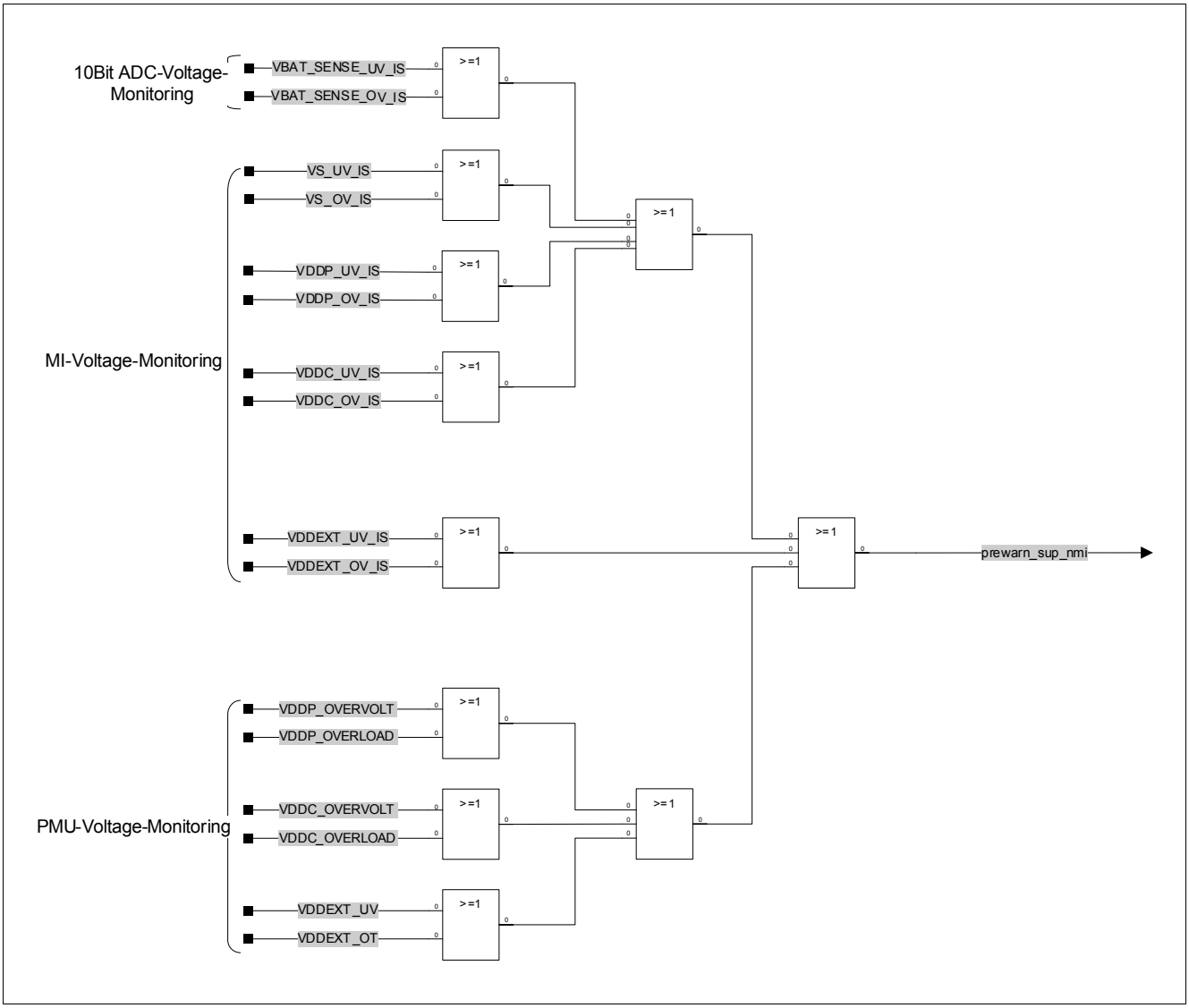

Figure 40 Structure of PREWARN_SUP

All PREWARN_SUP related flags are grouped in register **SCUPM_SYS_SUPPLY_IRQ_STS**. All measurement interface related flags are edge triggered (attribute **rwhe**). Therefore each IRQ_STS register has also an STS register where the current supply status can be monitored.

8.4.2 Interrupt Control Unit Status Register

All analog modules interrupt functionality is described in this chapter.

Table 129 Register Overview

Register Short Name	Register Long Name	Offset Address	Reset Value
Interrupt Control Unit Status Register, Interrupt Control Unit Status Overview Register			
SCUPM_SYS_IS	System Interrupt Status Register	18_H	$0000\ 0000_H$
SCUPM_SYS_SUPPLY_IRQ_STS	System Supply Interrupt Status Register	$1C_H$	$0000\ 0000_H$
Interrupt Control Unit Status Register, Interrupt Control Unit - Interrupt Clear Register			
SCUPM_SYS_ISCLR	System Interrupt Status Clear Register	14_H	$0000\ 0000_H$
SCUPM_SYS_SUPPLY_IRQ_CLR	System Supply Interrupt Status Clear Register	24_H	$0000\ 0000_H$
Interrupt Control Unit Status Register, Interrupt Control Unit - Interrupt Enable Register			
SCUPM_SYS_SUPPLY_IRQ_CTRL	System Supply Interrupt Control Register	20_H	$0000\ 00FF_H$
SCUPM_SYS_IRQ_CTRL	System Interrupt Control Register	28_H	$0000\ 0000_H$

The registers are addressed wordwise.

8.4.2.1 Interrupt Control Unit Status Overview Register

Due to the large variety of diagnosis possibilities of TLE9844, the system offers several overview registers, to help the user finding the right source of interrupt. Those registers are described in this sub-chapter.

Overview Register, Switches Interrupt Status Register and System Supply Interrupt Status Register

- **SCUPM_SYS_SUPPLY_IRQ_STS**: Flags for Under- and Overvoltage detection for all system relevant supplies. These Interrupts are edge triggered Interrupts.
- **SCUPM_SYS_IS**: Interrupts for Analog Modules.

System Interrupt Status Register

SCUPM_SYS_IS	Offset	Reset Value
System Interrupt Status Register	18_H	see Table 130

31	30	29	28	27	26	25	24	23	22	21	20	19	18	17	16
Res			SYS_SUP*	Res		SYS_OT_*	SYS_OTW*	Res	LIN_FAI*	Res		HS2_FAI*	HS1_FAI*	LS2_FAI*	LS1_FAI*
r			r	r		rwhxr	rwhxr	r	r	r		r	r	r	r

15	14	13	12	11	10	9	8	7	6	5	4	3	2	1	0
Res			SYS_SUP*	REFBG_U*	REFBG_L*	SYS_OT_*	SYS_OTW*	Res	LIN_FAI*	Res		HS2_FAI*	HS1_FAI*	LS2_FAI*	LS1_FAI*
r			r	rwhxr	rwhxr	rwhxr	rwhxr	r	r	r		r	r	r	r

Field	Bits	Type	Description
Res	31:29	r	**Reserved** Always read as 0
SYS_SUPPLY_STS	28	r	**System Supply Status** *Note: This flag is an OR combination of all Supply Status Flags* 0_B **INACTIVE** no status set 1_B **ACTIVE** at least one status set
Res	27:26	r	**Reserved** Always read as 0
SYS_OT_STS	25	rwhxr	**System Overtemperature Shutdown (ADC2, Channel 6) status** 0_B **INACTIVE** no status set 1_B **ACTIVE** at least one status set
SYS_OTWARN_STS	24	rwhxr	**System Overtemperature Prewarning (ADC2, Channel 6) status** 0_B **INACTIVE** no status set 1_B **ACTIVE** at least one status set
Res	23	r	**Reserved** Always read as 0
LIN_FAIL_STS	22	r	**LIN Fail Status** *Note: This flag is the LIN_OT_STS* 0_B **INACTIVE** no status set 1_B **ACTIVE** at least one status set
Res	21:20	r	**Reserved** Always read as 0

Field	Bits	Type	Description
HS2_FAIL_STS	19	r	**High Side Driver 2 Fail Status** *Note: This flag is an OR combination of HS2_OT_STS and HS2_OL_STS* 0_B **INACTIVE** no status set 1_B **ACTIVE** at least one status set
HS1_FAIL_STS	18	r	**High Side Driver 1 Fail Status** *Note: This flag is an OR combination of HS1_OT_STS and HS1_OL_STS* 0_B **INACTIVE** no status set 1_B **ACTIVE** at least one status set
LS2_FAIL_STS	17	r	**Low Side Driver 2 Fail Status** *Note: This flag is an OR combination of LS2_OT_STS, LS2_OT_PREWARN_STS and LS2_OL_STS* 0_B **INACTIVE** no status set 1_B **ACTIVE** at least one status set
LS1_FAIL_STS	16	r	**Low Side Driver 1 Fail Status** *Note: This flag is an OR combination of LS1_OT_STS, LS1_OT_PREWARN_STS and LS1_OL_STS* 0_B **INACTIVE** no status set 1_B **ACTIVE** at least one status set
Res	15:13	r	**Reserved** Always read as 0
SYS_SUPPLY_IS	12	r	**System Supply Interrupt Status** *Note: This flag is an OR combination of all Supply Interrupt Status Flags* 0_B **INACTIVE** no interrupt status set 1_B **ACTIVE** at least one interrupt status set
REFBG_UPTHWARN_IS	11	rwhxr	**8-Bit ADC2 Reference Overvoltage (ADC2, Channel 4) interrupt status** 0_B **INACTIVE** no interrupt status set 1_B **ACTIVE** at least one interrupt status set
REFBG_LOTHWARN_IS	10	rwhxr	**8-Bit ADC2 Reference Undervoltage (ADC2, Channel 4) interrupt status** 0_B **INACTIVE** no interrupt status set 1_B **ACTIVE** at least one interrupt status set
SYS_OT_IS	9	rwhxre	**System Overtemperature Shutdown (ADC2, Channel 6) interrupt status** 0_B **INACTIVE** no interrupt status set 1_B **ACTIVE** at least one interrupt status set
SYS_OTWARN_IS	8	rwhxre	**System Overtemperature Prewarning (ADC2, Channel 6) interrupt status** 0_B **INACTIVE** no interrupt status set 1_B **ACTIVE** at least one interrupt status set

Field	Bits	Type	Description
Res	7	r	**Reserved** Always read as 0
LIN_FAIL_IS	6	r	**LIN Fail Interrupt Status** *Note: This flag is an OR combination of LIN_OC_IS and LIN_OT_IS* 0_B **INACTIVE** no status set 1_B **ACTIVE** at least one status set
Res	5:4	r	**Reserved** Always read as 0
HS2_FAIL_IS	3	r	**High Side Driver 2 Fail Interrupt Status** *Note: This flag is an OR combination of HS2_OC_IS, HS2_OT_IS and HS2_OL_IS* 0_B **INACTIVE** no status set 1_B **ACTIVE** at least one status set
HS1_FAIL_IS	2	r	**High Side Driver 1 Fail Interrupt Status** *Note: This flag is an OR combination of HS1_OC_IS, HS1_OT_IS and HS1_OL_IS* 0_B **INACTIVE** no status set 1_B **ACTIVE** at least one status set
LS2_FAIL_IS	1	r	**Low Side Driver 2 Fail Interrupt Status** *Note: This flag is an OR combination of LS2_OC_IS, LS2_OT_IS, LS2_OT_PREWARN_IS and LS2_OL_IS* 0_B **INACTIVE** no status set 1_B **ACTIVE** at least one status set
LS1_FAIL_IS	0	r	**Low Side Driver 1 Fail Interrupt Status** *Note: This flag is an OR combination of LS1_OC_IS, LS1_OT_IS, LS1_OT_PREWARN_IS and LS1_OL_IS* 0_B **INACTIVE** no status set 1_B **ACTIVE** at least one status set

Table 130 RESET of SCUPM_SYS_IS

Register Reset Type	Reset Values	Reset Short Name	Reset Mode	Note
RESET_TYPE_4	00000000_H	RESET_TYPE_4		

System Supply Interrupt Status Register

SCUPM_SYS_SUPPLY_IRQ_STS	Offset	Reset Value
System Supply Interrupt Status Register	$1C_H$	see Table 131

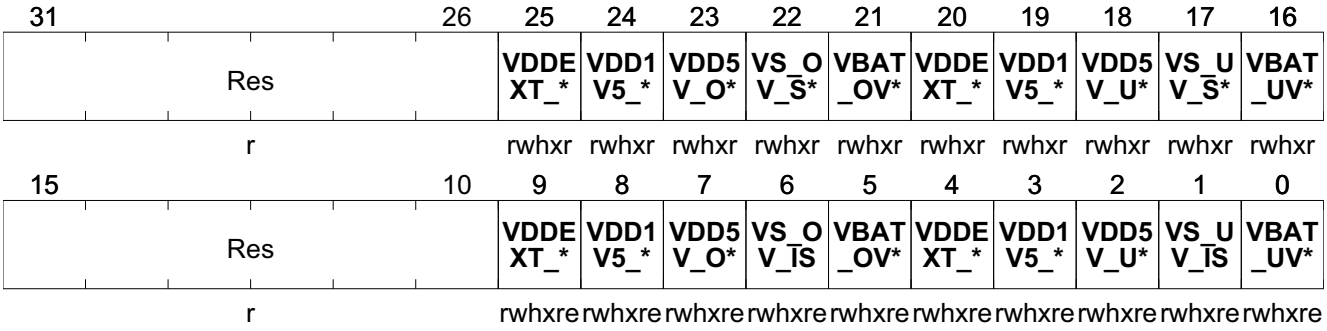

Field	Bits	Type	Description
Res	31:26	r	**Reserved** Always read as 0
VDDEXT_OV_STS	25	rwhxr	**VDDEXT Overvoltage Status** 0_B **No Overvoltage** occurred 1_B **Overvoltage** occurred
VDD1V5_OV_STS	24	rwhxr	**VDDC Overvoltage Status** 0_B **No Overvoltage** occurred 1_B **Overvoltage** occurred
VDD5V_OV_STS	23	rwhxr	**VDDP Overvoltage Status** 0_B **No Overvoltage** occurred 1_B **Overvoltage** occurred
VS_OV_STS	22	rwhxr	**VS Overvoltage Interrupt Status** 0_B **No Overvoltage** occurred 1_B **Overvoltage** occurred
VBAT_OV_STS	21	rwhxr	**VBAT Overvoltage Status** 0_B **No Overvoltage** occurred 1_B **Overvoltage** occurred
VDDEXT_UV_STS	20	rwhxr	**VDDEXT Undervoltage Status** 0_B **No Undervoltage** occurred 1_B **Undervoltage** occurred
VDD1V5_UV_STS	19	rwhxr	**VDDC Undervoltage Status** 0_B **No Undervoltage** occurred 1_B **Undervoltage** occurred
VDD5V_UV_STS	18	rwhxr	**VDDP Undervoltage Status** 0_B **No Undervoltage** occurred 1_B **Undervoltage** occurred
VS_UV_STS	17	rwhxr	**VS Undervoltage Status** 0_B **No Undervoltage** occurred 1_B **Undervoltage** occurred

Field	Bits	Type	Description
VBAT_UV_STS	16	rwhxr	**VBAT Undervoltage Status** 0_B **No Undervoltage** occurred 1_B **Undervoltage** occurred
Res	15:10	r	**Reserved** Always read as 0
VDDEXT_OV_IS	9	rwhxre	**VDDEXT Overvoltage Interrupt Status (ADC2 channel 2)** 0_B **No Overvoltage Interrupt** occurred 1_B **Overvoltage Interrupt** occurred
VDD1V5_OV_IS	8	rwhxre	**VDDC Overvoltage Interrupt Status (ADC2 channel 3)** 0_B **No Overvoltage Interrupt** occurred 1_B **Overvoltage Interrupt** occurred
VDD5V_OV_IS	7	rwhxre	**VDDP Overvoltage Interrupt Status (ADC2 channel 2)** 0_B **No Overvoltage Interrupt** occurred 1_B **Overvoltage Interrupt** occurred
VS_OV_IS	6	rwhxre	**VS Overvoltage Interrupt Status (ADC2 channel 1)** 0_B **No Overvoltage Interrupt** occurred 1_B **Overvoltage Interrupt** occurred
VBAT_OV_IS	5	rwhxre	**VBAT Overvoltage Interrupt Status (ADC2 channel 0)** 0_B **No Overvoltage Interrupt** occurred 1_B **Overvoltage Interrupt** occurred
VDDEXT_UV_IS	4	rwhxre	**VDDEXT Undervoltage Interrupt Status (ADC2 channel 2)** 0_B **No Undervoltage Interrupt** occurred 1_B **Undervoltage Interrupt** occurred
VDD1V5_UV_IS	3	rwhxre	**VDDC Undervoltage Interrupt Status (ADC2 channel 3)** 0_B **No Undervoltage Interrupt** occurred 1_B **Undervoltage Interrupt** occurred
VDD5V_UV_IS	2	rwhxre	**VDDP Undervoltage Interrupt Status (ADC2 channel 2)** 0_B **No Undervoltage Interrupt** occurred 1_B **Undervoltage Interrupt** occurred
VS_UV_IS	1	rwhxre	**VS Undervoltage Interrupt Status (ADC2 channel 1)** 0_B **No Undervoltage Interrupt** occurred 1_B **Undervoltage Interrupt** occurred
VBAT_UV_IS	0	rwhxre	**VBAT Undervoltage Interrupt Status (ADC2 channel 0)** 0_B **No Undervoltage Interrupt** occurred 1_B **Undervoltage Interrupt** occurred

Table 131 RESET of SCUPM_SYS_SUPPLY_IRQ_STS

Register Reset Type	Reset Values	Reset Short Name	Reset Mode	Note
RESET_TYPE_4	00000000_H	RESET_TYPE_4		

8.4.2.2 Interrupt Control Unit - Interrupt Clear Register

The Analog Module Interrupts can be cleared by their corresponding enable bits which are located in Registers:

- **SCUPM_SYS_SUPPLY_IRQ_CLR**: Clear of Interrupts for Under- and Overvoltage detection for all system relevant supplies. These interrupts are edge triggered interrupts to reduce interrupt load of the µC.
- **SCUPM_SYS_ISCLR**: Clear of interrupts related to Analog Modules.

System Interrupt Status Clear Register

SCUPM_SYS_ISCLR	Offset	Reset Value
System Interrupt Status Clear Register	14_H	see Table 132

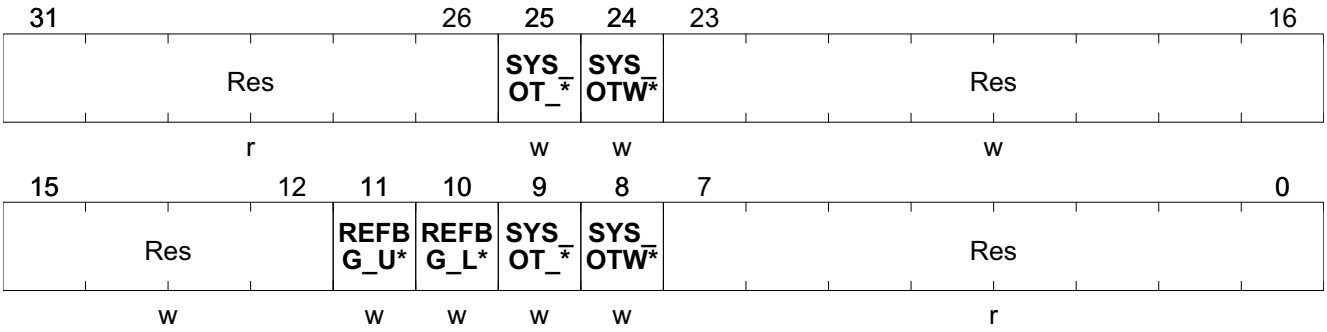

Field	Bits	Type	Description
Res	31:26	r	**Reserved** Always read as 0
SYS_OT_SC	25	w	**System Overtemperature Shutdown status clear** 0_B **No Clear** 1_B **Clear**
SYS_OTWARN_SC	24	w	**System Overtemperature Prewarning status clear** 0_B **No CLear** 1_B **Clear**
Res	23:12	w	**Reserved** Always read as 0
REFBG_UPTHWARN_ISC	11	w	**8-Bit ADC2 Reference Overvoltage interrupt status clear** 0_B **No Clear** 1_B **Clear**
REFBG_LOTHWARN_ISC	10	w	**8-Bit ADC2 Reference Undervoltage interrupt status clear** 0_B **No Clear** 1_B **Clear**
SYS_OT_ISC	9	w	**System Overtemperature Shutdown status clear** 0_B **No Clear** 1_B **Clear**

Field	Bits	Type	Description
SYS_OTWARN_ISC	8	w	**System Overtemperature Prewarning status clear** 0_B **No Clear** 1_B **Clear**
Res	7:0	r	**Reserved** Always read as 0

Table 132 RESET of SCUPM_SYS_ISCLR

Register Reset Type	Reset Values	Reset Short Name	Reset Mode	Note
RESET_TYPE_3	00000000_H	RESET_TYPE_3		

System Supply Interrupt Status Clear Register

SCUPM_SYS_SUPPLY_IRQ_CLR	Offset	Reset Value
System Supply Interrupt Status Clear Register	24_H	see Table 133

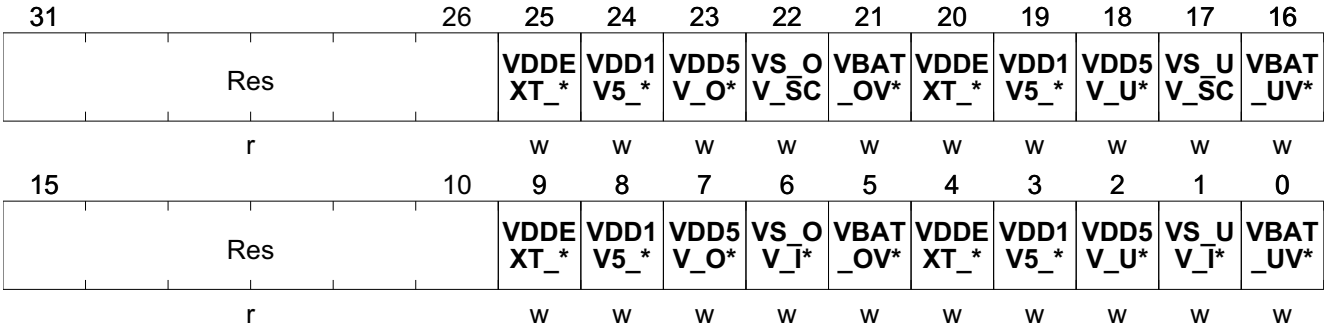

Field	Bits	Type	Description
Res	31:26	r	**Reserved** Always read as 0
VDDEXT_OV_SC	25	w	**VDDEXT Overvoltage Status clear** 0_B **No Clear** 1_B **Clear**
VDD1V5_OV_SC	24	w	**VDDC Overvoltage Status clear** 0_B **No Clear** 1_B **Clear**
VDD5V_OV_SC	23	w	**VDDP Overvoltage Status clear** 0_B **No Clear** 1_B **Clear**
VS_OV_SC	22	w	**VS Overvoltage Interrupt Status clear** 0_B **No Clear** 1_B **Clear**
VBAT_OV_SC	21	w	**VBAT Overvoltage Status clear** 0_B **No Clear** 1_B **Clear**
VDDEXT_UV_SC	20	w	**VDDEXT Undervoltage Status clear** 0_B **No Clear** 1_B **Clear**
VDD1V5_UV_SC	19	w	**VDDC Undervoltage Status clear** 0_B **No Clear** 1_B **Clear**
VDD5V_UV_SC	18	w	**VDDP Undervoltage Status clear** 0_B **No Clear** 1_B **Clear**
VS_UV_SC	17	w	**VS Undervoltage Status clear** 0_B **No Clear** 1_B **Clear**

Field	Bits	Type	Description
VBAT_UV_SC	16	w	**VBAT Undervoltage Status clear** 0_B **No Clear** 1_B **Clear**
Res	15:10	r	**Reserved** Always read as 0
VDDEXT_OV_ISC	9	w	**VDDEXT Overvoltage Interrupt Status clear** 0_B **No Clear** 1_B **Clear**
VDD1V5_OV_ISC	8	w	**VDDC Overvoltage Interrupt Status clear** 0_B **No Clear** 1_B **Clear**
VDD5V_OV_ISC	7	w	**VDDP Overvoltage Interrupt Status clear** 0_B **No Clear** 1_B **Clear**
VS_OV_ISC	6	w	**VS Overvoltage Interrupt Status clear** 0_B **No Clear** 1_B **Clear**
VBAT_OV_ISC	5	w	**VBAT Overvoltage Interrupt Status clear** 0_B **No Clear** 1_B **Clear**
VDDEXT_UV_ISC	4	w	**VDDEXT Undervoltage Interrupt Status clear** 0_B **No Clear** 1_B **Clear**
VDD1V5_UV_ISC	3	w	**VDDC Undervoltage Interrupt Status clear** 0_B **No Clear** 1_B **Clear**
VDD5V_UV_ISC	2	w	**VDDP Undervoltage Interrupt Status clear** 0_B **No Clear** 1_B **Clear**
VS_UV_ISC	1	w	**VS Undervoltage Interrupt Status clear** 0_B **No Clear** 1_B **Clear**
VBAT_UV_ISC	0	w	**VBAT Undervoltage Interrupt Status clear** 0_B **No Clear** 1_B **Clear**

Table 133 RESET of SCUPM_SYS_SUPPLY_IRQ_CLR

Register Reset Type	Reset Values	Reset Short Name	Reset Mode	Note
RESET_TYPE_4	00000000_H	RESET_TYPE_4		

8.4.2.3 Interrupt Control Unit - Interrupt Enable Register

The Analog Module Interrupts can be enabled and disabled by there corresponding enable bits which are located in Registers:

- **SCUPM_SYS_SUPPLY_IRQ_CTRL**: Enable of Interrupts for Under- and Overvoltage detection for all system relevant supplies. These interrupts are edge triggered interrupts to reduce interrupt load of the µC.
- **SCUPM_SYS_IRQ_CTRL**: Enable of interrupts for Analog Modules.

System Interrupt Control Register

SCUPM_SYS_IRQ_CTRL	Offset	Reset Value
System Interrupt Control Register	28_H	see Table 134

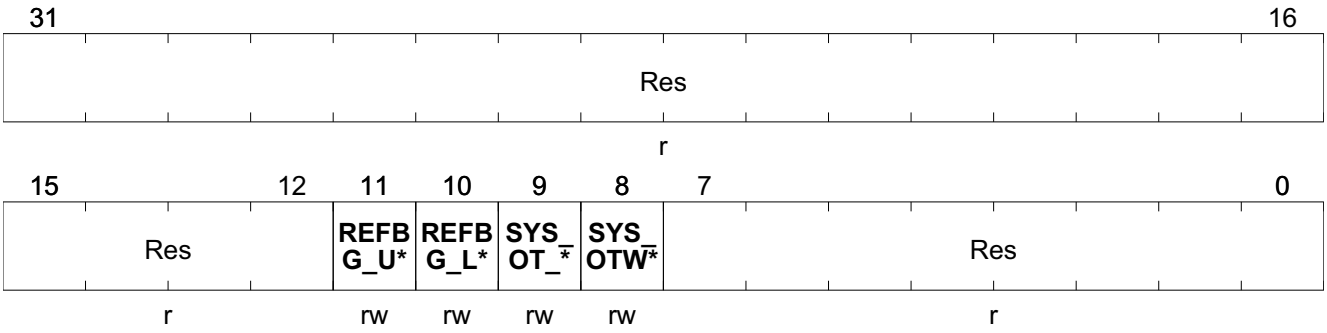

Field	Bits	Type	Description
Res	31:12	r	**Reserved** Always read as 0
REFBG_UPTHWARN_IE	11	rw	**Reference Voltage Overvoltage Interrupt Enable** 0_B Interrupt is disabled 1_B Interrupt is enabled
REFBG_LOTHWARN_IE	10	rw	**Reference Voltage Undervoltage Interrupt Enable** 0_B Interrupt is disabled 1_B Interrupt is enabled
SYS_OT_IE	9	rw	**System Overtemperature Shutdown Interrupt Enable (leads to shutdown of System)** 0_B Interrupt is disabled 1_B Interrupt is enabled
SYS_OTWARN_IE	8	rw	**System Overtemperature Warning Interrupt Enable** 0_B Interrupt is disabled 1_B Interrupt is enabled
Res	7:0	r	**Reserved** Always read as 0

Table 134 RESET of SCUPM_SYS_IRQ_CTRL

Register Reset Type	Reset Values	Reset Short Name	Reset Mode	Note
RESET_TYPE_4	00000000_H	RESET_TYPE_4		

System Supply Interrupt Control Register

SCUPM_SYS_SUPPLY_IRQ_CTRL	Offset	Reset Value
System Supply Interrupt Control Register	20_H	see Table 135

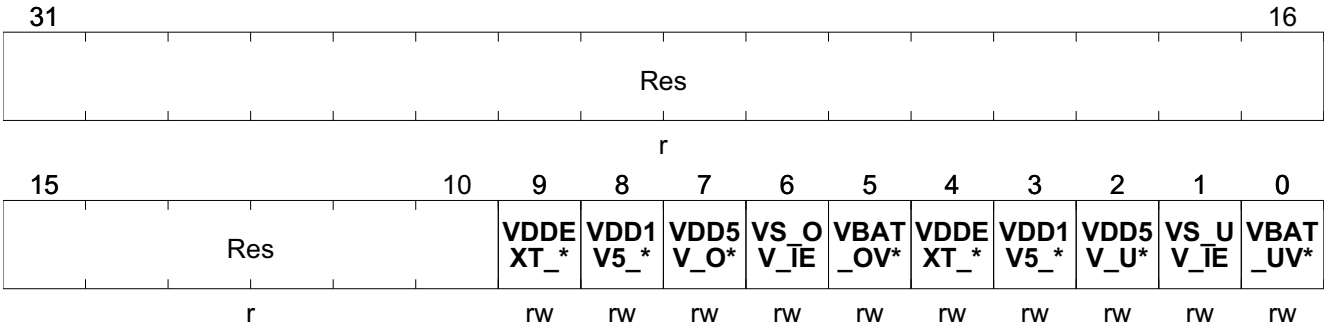

Field	Bits	Type	Description
Res	31:10	r	**Reserved** Always read as 0
VDDEXT_OV_IE	9	rw	**VDDEXT Overvoltage Interrupt Enable** 0_B Interrupt is disabled 1_B Interrupt is enabled
VDD1V5_OV_IE	8	rw	**VDDC Overvoltage Interrupt Enable** 0_B Interrupt is disabled 1_B Interrupt is enabled
VDD5V_OV_IE	7	rw	**VDDP Overvoltage Interrupt Enable** 0_B Interrupt is disabled 1_B Interrupt is enabled
VS_OV_IE	6	rw	**VS Overvoltage Interrupt Enable** 0_B Interrupt is disabled 1_B Interrupt is enabled
VBAT_OV_IE	5	rw	**VBAT Overvoltage Interrupt Enable** 0_B Interrupt is disabled 1_B Interrupt is enabled
VDDEXT_UV_IE	4	rw	**VDDEXT Undervoltage Interrupt Enable** 0_B Interrupt is disabled 1_B Interrupt is enabled
VDD1V5_UV_IE	3	rw	**VDDC Undervoltage Interrupt Enable** 0_B Interrupt is disabled 1_B Interrupt is enabled
VDD5V_UV_IE	2	rw	**VDDP Undervoltage Interrupt Enable** 0_B Interrupt is disabled 1_B Interrupt is enabled
VS_UV_IE	1	rw	**VS Undervoltage Interrupt Enable** 0_B Interrupt is disabled 1_B Interrupt is enabled

Field	Bits	Type	Description
VBAT_UV_IE	0	rw	**VBAT Undervoltage Interrupt Enable** 0_B Interrupt is disabled 1_B Interrupt is enabled

Table 135 RESET of SCUPM_SYS_SUPPLY_IRQ_CTRL

Register Reset Type	Reset Values	Reset Short Name	Reset Mode	Note
RESET_TYPE_4	$000000FF_H$	RESET_TYPE_4		

8.5 Power Control Unit for Power Modules (PCU_PM)

The chapter describes the implementation of the power modules state machine. This state machine is responsible for powering up and powering down the on-board power modules. It takes care about the interaction between the Measurement Unit and the modules which are evaluated by the Unit. The following modules are controlled by this statemachine:

Analog Modules controlled by Power Control Unit:

- Central Reference Voltage Generation
- Central Bias Current Generation
- 8-Bit ADC Core
- Supply Voltage Attenuators
- Monitoring Inputs Voltage Attenuators
- LIN Transceiver
- Low Side Drivers
- High Side Drivers

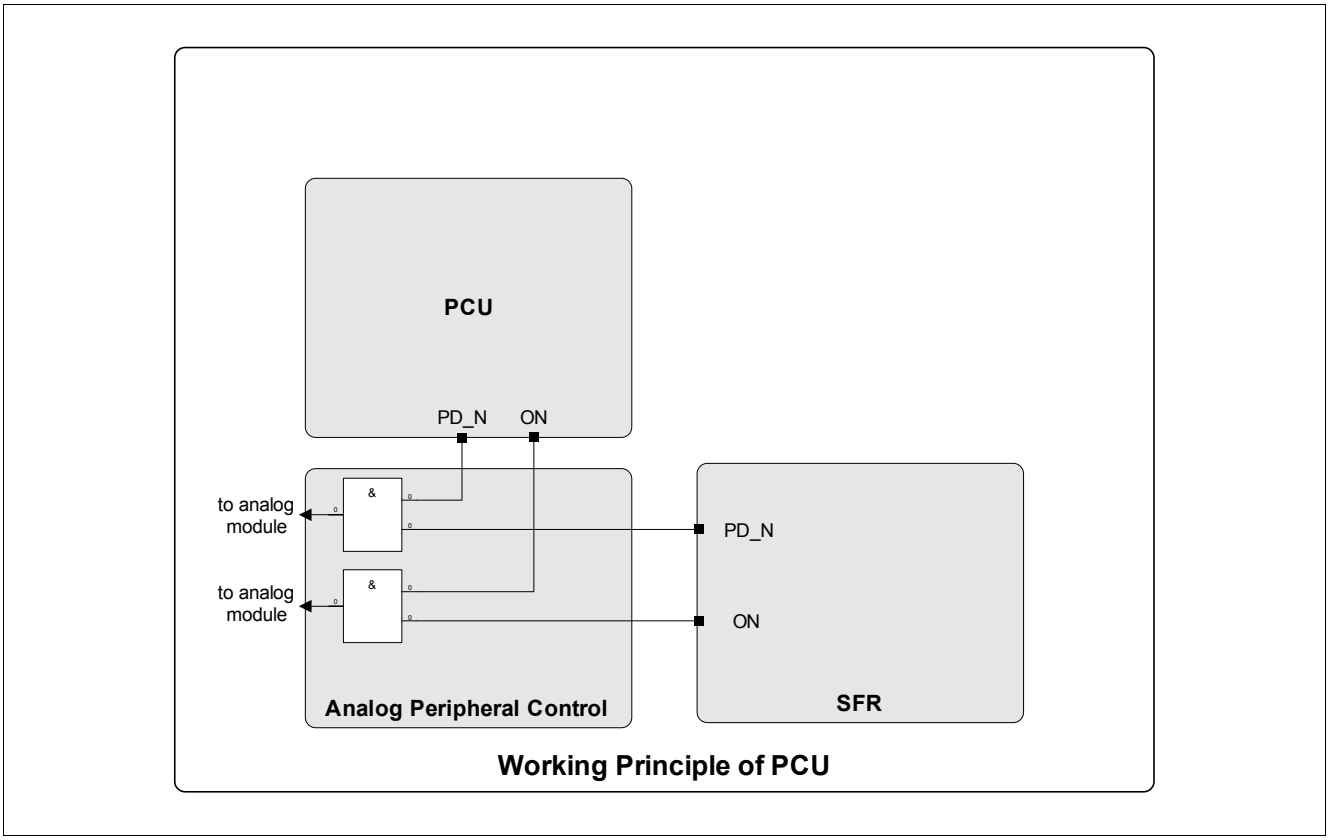

Figure 41 Function of AP_SUB_CTRL

If the device will power up the analog modules statemachine will startup all analog modules. First of all, the reference voltage will be enabled. After that the biasing module will be enabled. If this step is completed the analog modules will be enabled step by step. After this is done the measurement interface will start-up.

When leaving Stop Mode, this sequence restores the SFR register contents with the values written before entering Stop Mode.

The Sleep and Stop Mode entry is as well controlled by this state machine. This ensures a smooth shutdown of the modules avoiding disturbances (like load jumps) on the supplies.

The power control unit also handles system failures indicated by the analog measurement interface. They are:

System failures handled by SCU_PM:

- automatic shutdown of power modules in case of VS Overvoltage
- automatic shutdown of power modules in case of System Overtemperature
- automatic shutdown of power modules in case of loss of clock
- automatic shutdown of system in case of System Overtemperature
- automatic shutdown of system in case of internal supply fail
- automatic shutdown of LIN module in case of VS Undervoltage

How to configure this actions on the above described system failures will be described in the following chapters.

8.5.1 VS-Overvoltage System Shutdown

The PCU provides the possibility of an system shutdown in case of VS Overvoltage. This feature can be used to reduce power dissipation in case of an increased supply voltage VS. This feature can be enabled by bit

SYS_VS_OV_SLM_DIS. **This bit is low active!**. When there is an overvoltage, the system will be set in System Shutdown and all Power Modules

LIN,

Low Side,

High SIde

are switched off automatically. The Power Modules will be switched on when the VS-Overvoltage condition is left again. The figure below shows the principle of the enable bit:

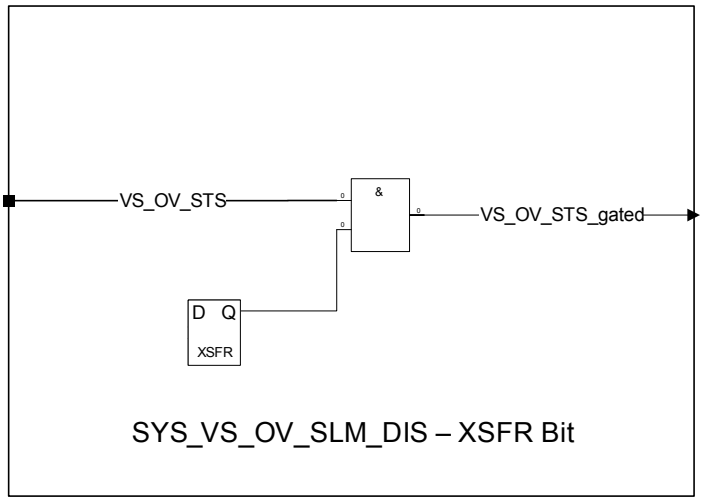

Figure 42 Implementation of Module Shutdown because of VS Overvoltage

8.5.2 Overtemperature System Shutdown

In case of overtemperature (T_j > 150 °C) the system will be set to Sleep Mode. This functionality is used to protect the system from thermal overstress. One possibility of avoiding this thermal shutdown is to stick to an emergency procedure, which helps to minimize the power dissipation in the system. This routine would require to shutdown all modules which have big contribution to power dissipation (e.g. Low Sides, High Sides). This procedure has to be implemented in user software. Another possibility is to use the implemented hardware shutdown procedure. This procedure can be activated by the flag **SYS_OT_PS_DIS**. **This flag is low active!** When this flag is set all power dissipation contributors will be automatically shutdown.

- Main power dissipation contributors are:
  - Low Side Drivers
  - High Side Drivers
  - LIN

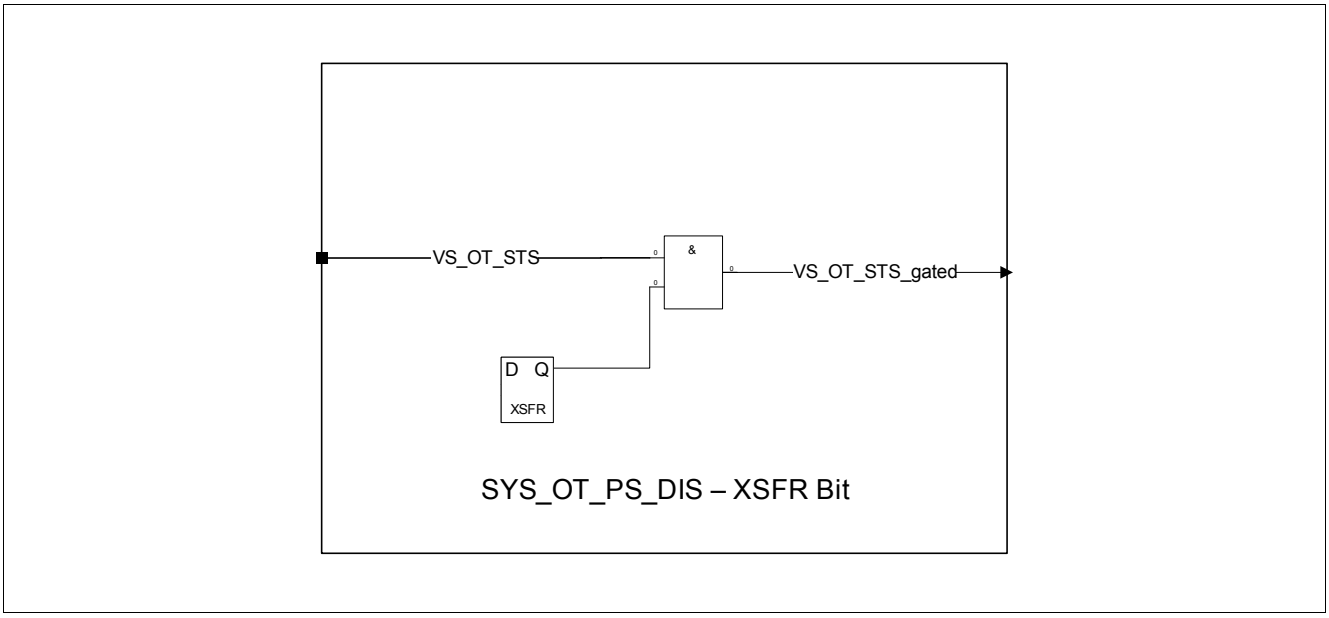

Figure 43 Implementation of Power Module Shutdown in case of System Overtemperature

As it can be seen, the bit is gating the status flag VS_OT_STS. If this bit is set, 1ms after the indication the system will be set into Sleep Mode.

8.5.3 Power Control Unit Register

The PCU is fully controllable by the below listed SFR Registers.

Table 136 Register Overview

Register Short Name	Register Long Name	Offset Address	Reset Value
Power Control Unit Register			
SCUPM_PCU_CTRL_STS	Power Control Unit Control Status Register	30_H	$0EE37EF3_H$
SCUPM_PKGCFG1	Package Configuration Register 1	90_H	00000100_H

The registers are addressed wordwise.

Power Control Unit Control Status Register

SCUPM_PCU_CTRL_STS	Offset	Reset Value
Power Control Unit Control Status Register	30_H	see Table 137

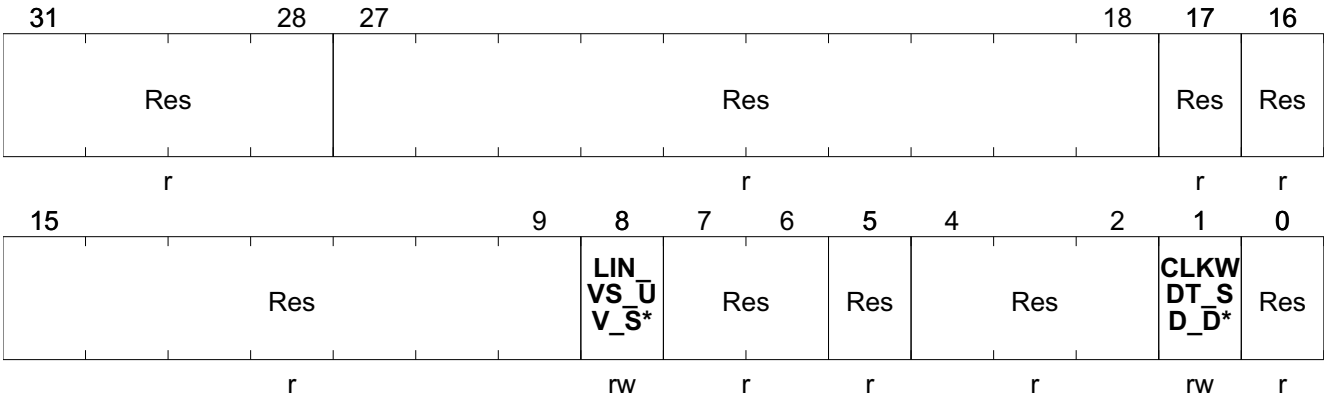

Field	Bits	Type	Description
Res	31:28	r	**Reserved** Always read as 0
Res	27:18	r	**Reserved** Always read as 0
Res	17	r	**Reserved** Always read as 0
Res	16:9	r	**Reserved** Always read as 0

Field	Bits	Type	Description
LIN_VS_UV_SD_DIS	8	rw	**LIN Module VS Undervoltage Transmitter Shutdown** 0_B **Enable** Automatic Shutdown for Power modules in case of VS Undervoltage enabled 1_B **Disable** Automatic Shutdown for Power modules in case of VS Undervoltage disabled
Res	7:6	r	**Reserved** Always read as 0
Res	5	r	**Reserved** Always read as 0
Res	4:2	r	**Reserved** Always read as 0
CLKWDT_SD_DIS	1	rw	**Power Modules Clock Watchdog Shutdown Disable** 0_B **Shutdown Enable** Power Devices will be switched off when Clock Watchdog occurs 1_B **Shutdown Disable** Power Devices will not be shutdown when Clock Watchdog occurs
Res	0	r	**Reserved** Always read as 0

Table 137 RESET of SCUPM_PCU_CTRL_STS

Register Reset Type	Reset Values	Reset Short Name	Reset Mode	Note
RESET_TYPE_4	$0EE37EF3_H$	RESET_TYPE_4		

Package Configuration Register 1

SCUPM_PKGCFG1	Offset	Reset Value
Package Configuration Register 1	90_H	see Table 138

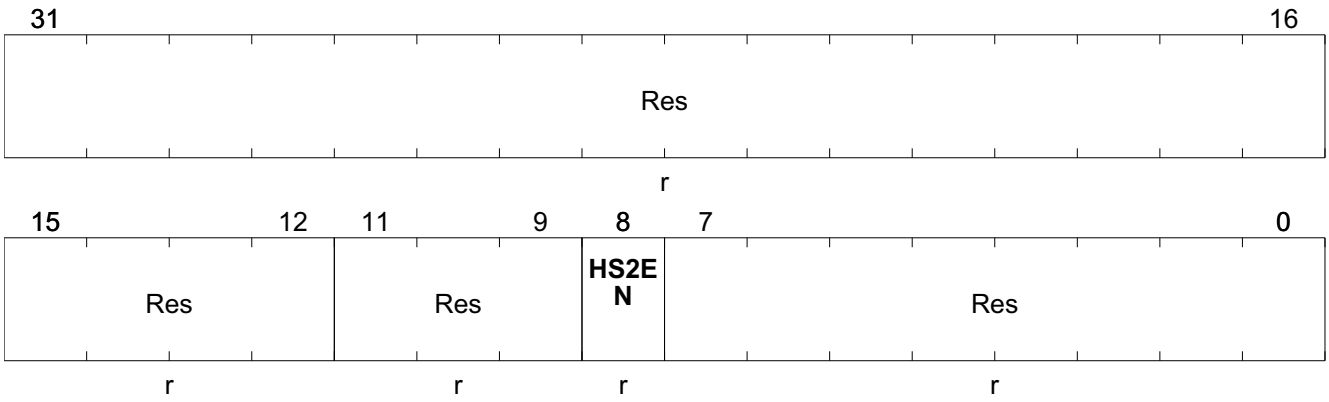

Field	Bits	Type	Description
Res	31:12	r	**Reserved** Always read as 0

Field	Bits	Type	Description
Res	11:9	r	**Reserved** Always read as 0
HS2EN	8	r	**High Side 2 Enable** 0_B **High Side 2** is not available 1_B **High Side 2** is available
Res	7:0	r	**Reserved** Always read as 0

Table 138 RESET of SCUPM_PKGCFG1

Register Reset Type	Reset Values	Reset Short Name	Reset Mode	Note
RESET_TYPE_4	00000100_H	RESET_TYPE_4		

9 ARM Cortex-M0 Core

9.1 Features

The key features of the Cortex-M0 implemented are listed below.

Processor Core. A low gate count core, with low latency interrupt processing:

- Thumb® + Thumb-2® Instruction Set
- Banked stack pointer (SP) only
- Handler and thread modes
- Thumb and debug states
- Interruptible-continued instructions LDM/STM, Push/Pop for low interrupt latency
- Automatic processor state saving and restoration for low latency Interrupt Service Routine (ISR) entry and exit
- ARM architecture v6-M Style
- ARMv6 unaligned accesses
- Systick (typ. 1ms)

Nested Vectored Interrupt Controller (NVIC) closely integrated with the processor core to achieve low latency interrupt processing:

- External interrupts, configurable from 1 to 24
- 7 interrupt priority registers for levels from 0 up to 192 in steps of 64
- Dynamic reprioritization of interrupts
- Priority grouping. This enables selection of pre-empting interrupt levels and non pre-empting interrupt levels
- Support for tail-chaining and late arrival of interrupts. This enables back-to-back interrupt processing without the overhead of state saving and restoration between interrupts.
- Processor state automatically saved on interrupt entry, and restored on interrupt exit, with no instruction overhead

Bus interfaces

- Advanced High-performance Bus-Lite (AHB-Lite) interfaces

9.2 Introduction

The ARM Cortex-M0 processor is a leading 32-bit processor and provides a high-performance and cost-optimized platform for a broad range of applications including microcontrollers, automotive body systems and industrial control systems. Like the other Cortex-family processors, the Cortex-M0 processor implements the Thumb®-2 instruction set architecture. With the optimized feature set the Cortex-M0 delivers 32-bit performance in an application space that is usually associated with 8- and 16-bit microcontrollers.

9.2.1 Block Diagram

Figure 44 shows the functional blocks of the Cortex-M0.

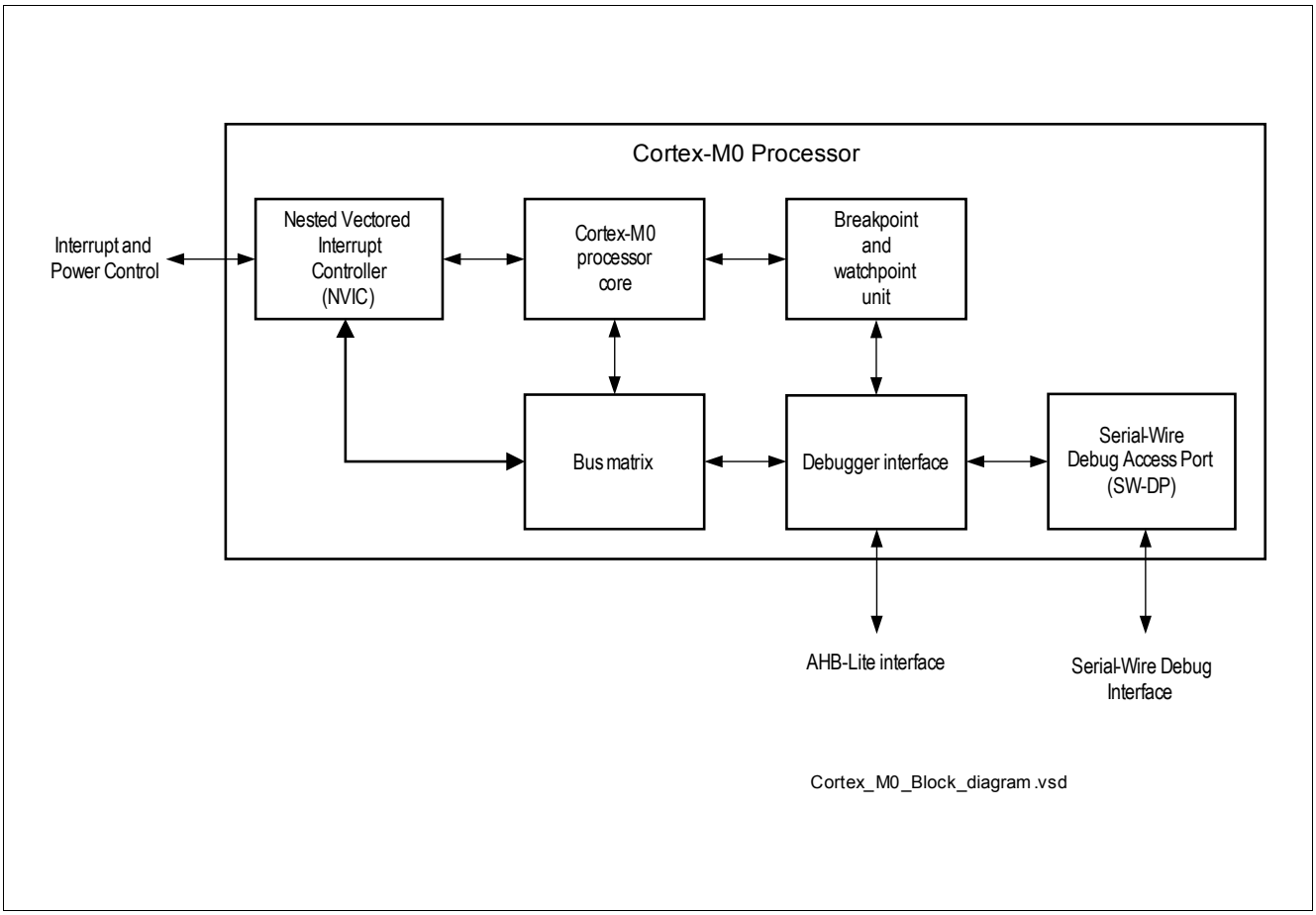

Figure 44 Cortex-M0 Block Diagram

9.3 Functional Description

9.3.1 Registers

The processor has the following 32-bit registers:

- 13 general-purpose registers, R0-R12
- Stack pointer (SP), R13 alias of banked registers, SP_process and SP_main
- Link register (LR), R14
- Program counter (PC), R15
- Special-purpose registers

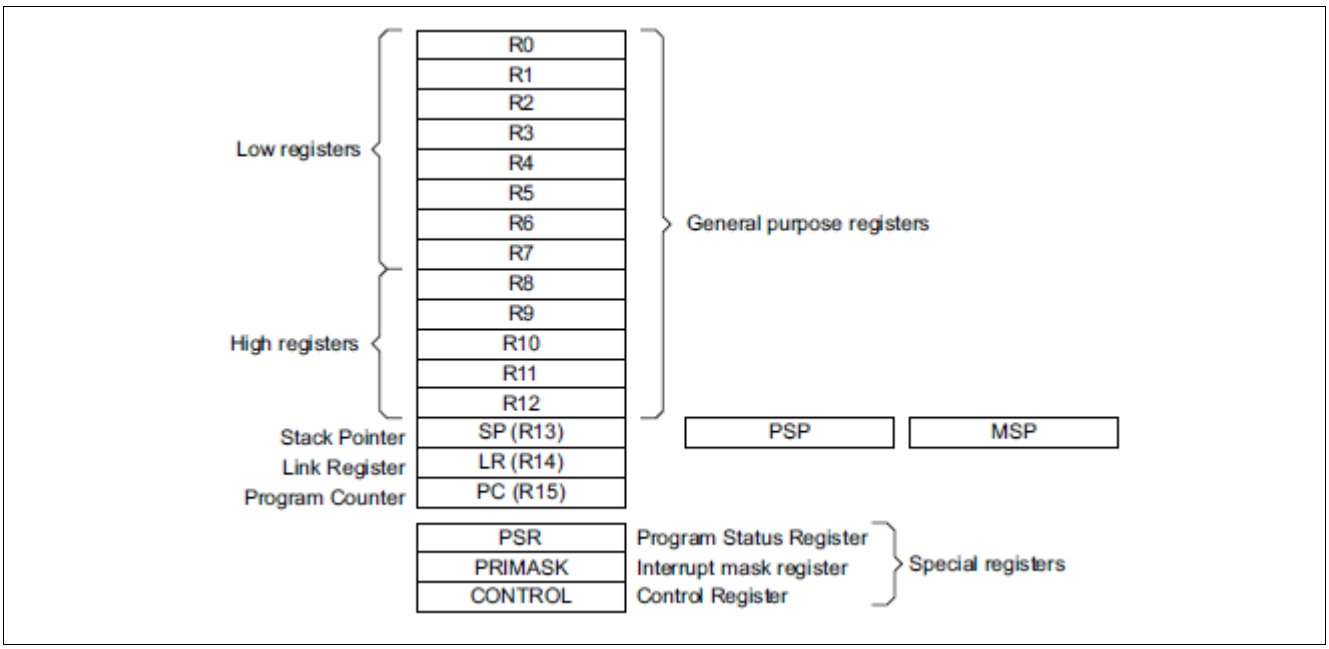

Figure 45 Processor Register Set

9.3.1.1 General-Purpose Registers

The general-purpose registers R0-R12 are 32-bit registers for data operations.

Registers R13, R14, and R15 have the following special functions:

Stack Pointer

Register R13 is used as Stack Pointer (SP).

Link Register

Register R14 is the subroutine Link Register (LR).

Program counter

Register R15 is the Program Counter (PC).

9.3.1.2 Special-Purpose Registers

Program Status Register

Register PSR is the Program Status Register.

Interrupt MaskRegister

Register PRIMASK is the Interrupt Mask Register.

Control Register

Register CONTROL is the Control Register.

9.4 Summary of Processor Registers

The processor has the following 32-bit registers that control functionality:

Table 139 Register Address SpaceAddress Space for Processor Register s

Module	Base Address	End Address	Note
CPU	$E000E000_H$	$E000EFFF_H$	ARM Cortex-M0 Core SCS (System Control Space), Systick, NVIC Processor Registers

Table 140 Register Overview

Register Short Name	Register Long Name	Offset Address	Reset Value
Summary of Processor Registers,			
CPU_SYSTICK_CSR	SysTick Control and Status Register	010_H	00000000_H
CPU_SYSTICK_RVR	SysTick Reload Value Register	014_H	$00XXXXXX_H$
CPU_SYSTICK_CVR	SysTick Current Value Register	018_H	$00XXXXXX_H$
CPU_SYSTICK_CALIB	SysTick Calibration Value Register	$01C_H$	$X0XXXXXX_H$
CPU_NVIC_ISER	Interrupt Set-Enable	100_H	00000000_H
CPU_NVIC_ICER	Interrupt Clear-Enable	180_H	00000000_H
CPU_NVIC_ISPR	Interrupt Set-Pending	200_H	00000000_H
CPU_NVIC_ICPR	Interrupt Clear-Pending	280_H	00000000_H
CPU_NVIC_IPR0	Interrupt Priority	400_H	00000000_H
CPU_NVIC_IPR1	Interrupt Priority	404_H	00000000_H
CPU_NVIC_IPR2	Interrupt Priority	408_H	00000000_H
CPU_NVIC_IPR3	Interrupt Priority	$40C_H$	00000000_H
CPU_NVIC_IPR4	Interrupt Priority	410_H	00000000_H
CPU_NVIC_IPR5	Interrupt Priority	414_H	00000000_H
CPU_CPUID	CPU ID Base Register	$D00_H$	$410CC200_H$
CPU_ICSR	Interrupt Control and State Register	$D04_H$	00000000_H
CPU_AIRCR	Application Interrupt/Reset Control Register	$D0C_H$	$FA050000_H$
CPU_SCR	System Control Register	$D10_H$	00000000_H
CPU_CCR	Configuration Control Register	$D14_H$	00000204_H
CPU_SHPR2	System Handler Priority Register 2	$D1C_H$	00000000_H
CPU_SHPR3	System Handler Priority Register 3	$D20_H$	00000000_H

The registers are addressed wordwise.

SysTick Control and Status Register

CPU_SYSTICK_CSR	Offset	Reset Value
SysTick Control and Status Register	010_H	see Table 141

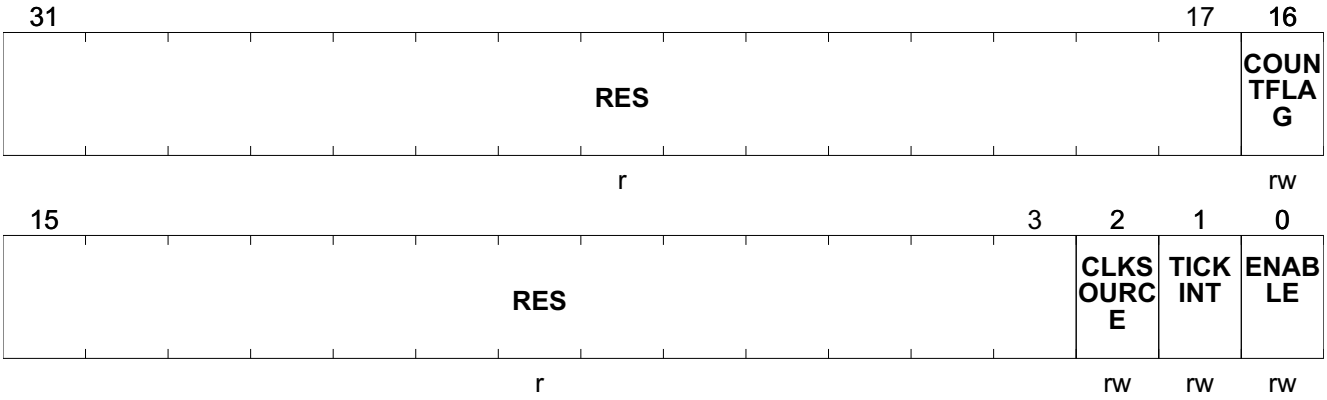

Field	Bits	Type	Description
RES	31:17	r	**Reserved**
COUNTFLAG	16	rw	**Count Flag** Returns 1 if timer counted to 0 since the last read of this register.
RES	15:3	r	**Reserved**
CLKSOURCE	2	rw	**CLK Source** Selects the SysTick timer clock source. 0_B external reference clock 1_B processor clock
TICKINT	1	rw	**TICKINT** Enables SysTick exception request 0_B counting down to 0 does not assert the SysTick exception request. 1_B counting down to 0 asserts the SysTick exception request.
ENABLE	0	rw	**Enable** 0_B counter disabled. 1_B counter enabled.

Table 141 RESET of CPU_SYSTICK_CSR

Register Reset Type	Reset Values	Reset Short Name	Reset Mode	Note
	00000000_H			

SysTick Reload Value Register

CPU_SYSTICK_RVR	Offset	Reset Value
SysTick Reload Value Register	014_H	see Table 142

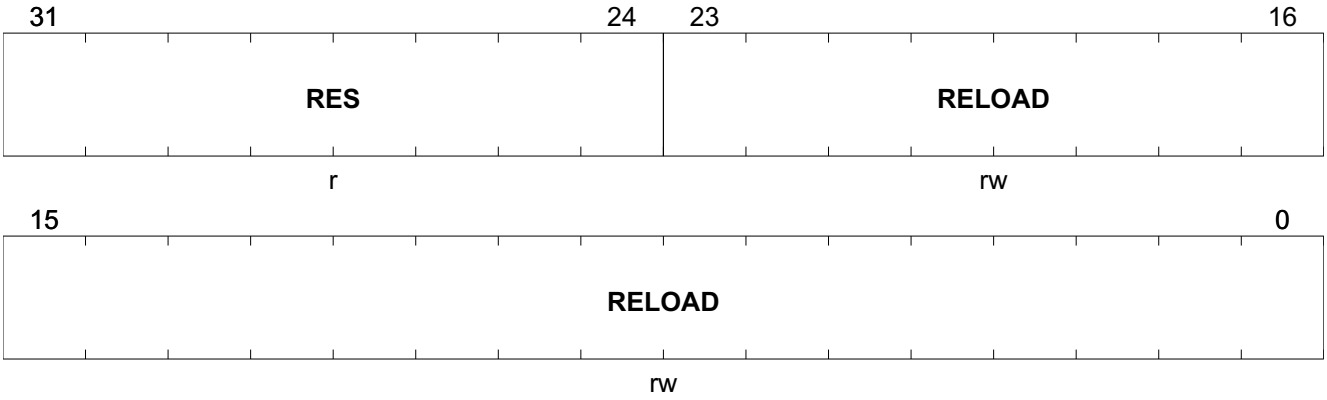

Field	Bits	Type	Description
RES	31:24	r	**Reserved**
RELOAD	23:0	rw	**Reload** Value to load into the SysTick Current Value Register when the counter is enabled and when it reaches 0, see **Calculating the RELOAD Value**.

Table 142 RESET of CPU_SYSTICK_RVR

Register Reset Type	Reset Values	Reset Short Name	Reset Mode	Note
	$00XXXXXX_H$			

Calculating the RELOAD Value

The RELOAD value can be any value in the range 00000001_H to $00FFFFFF_H$. You can program a value of 0, but this has no effect because the SysTick exception request and COUNTFLAG are activated when counting from 1 to 0.

To generate a multi-shot timer with a period of N processor clock cycles, use a RELOAD value of N-1. For example, if the SysTick interrupt is required every 100 clock pulses, set RELOAD to 99.

SysTick Current Value Registers

CPU_SYSTICK_CVR	Offset	Reset Value
SysTick Current Value Register	018_H	see Table 143

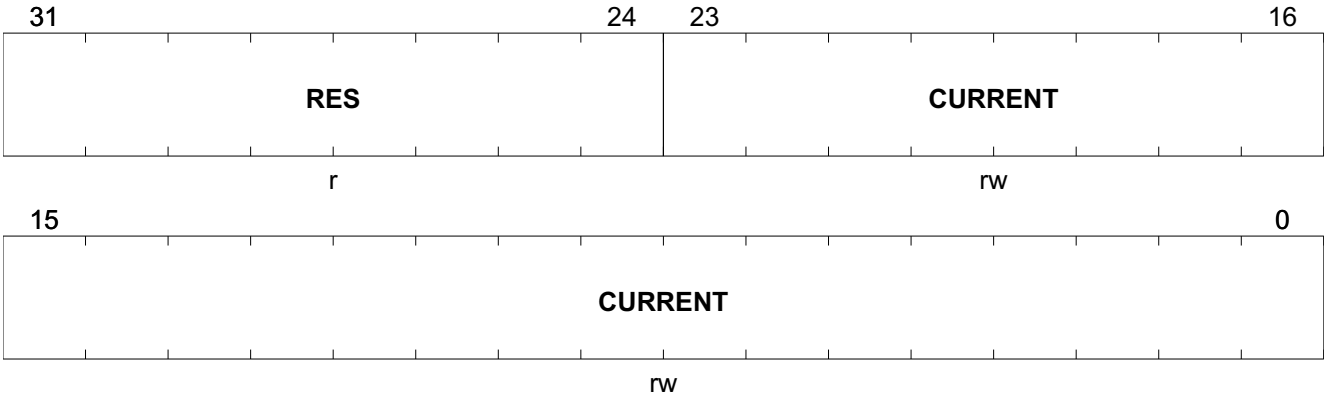

Field	Bits	Type	Description
RES	31:24	r	**Reserved**
CURRENT	23:0	rw	**Current** Reads return the current value of the SysTick counter. A write of any value clears the field to 0, and also clears the SYST_CSR.COUNTFLAG bit to 0.

Table 143 RESET of CPU_SYSTICK_CVR

Register Reset Type	Reset Values	Reset Short Name	Reset Mode	Note
	$00XXXXXX_H$			

SysTick Calibration Value Registers

CPU_SYSTICK_CALIB	Offset	Reset Value
SysTick Calibration Value Register	$01C_H$	see Table 144

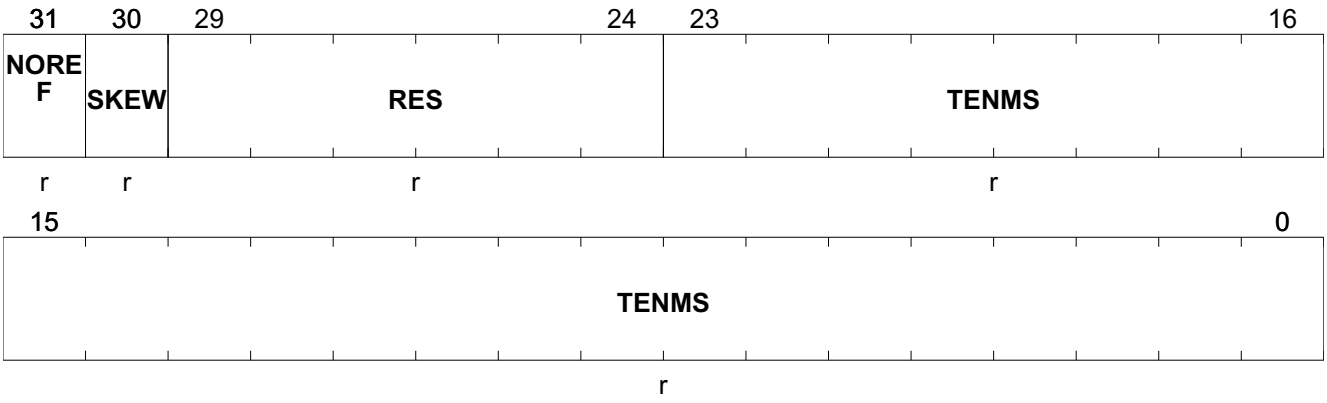

Field	Bits	Type	Description
NOREF	31	r	**No Reference Clock** Indicates that no separate reference clock is provided. Reads as 0_B.
SKEW	30	r	**Skew** Calibration value for the 10ms inexact timing is not known because TENMS is not known. This can affect the suitability of SysTick as a software real time clock. Reads as 0_B.
RES	29:24	r	**Reserved**
TENMS	23:0	r	**Tenms** Indicates calibration value is not known. If calibration information is not known, calculate the calibration value required from the frequency of the processor clock or external clock. Reads as zero.

Table 144 RESET of CPU_SYSTICK_CALIB

Register Reset Type	Reset Values	Reset Short Name	Reset Mode	Note
	$X0XXXXXX_H$			Exact Reset Values: XX00 0000 XXXX XXXX XXXX XXXX XXXX XXXX(B)

Interrupt Set-Enable Register

CPU_NVIC_ISER	Offset	Reset Value
Interrupt Set-Enable	100_H	see Table 145

31	30	29	28	27	26	25	24	23	22	21	20	19	18	17	16
RES								Int_PORT2	Int_MON	Int_DU	Int_HS2	Int_HS1	Int_LS2	Int_LS1	RES
r								rw	rw	rw	rw	rw	rw	rw	r

15	14	13	12	11	10	9	8	7	6	5	4	3	2	1	0
RES	Int_WAKEUP	Int_EXINT1	Int_EXINT0	Int_UART2	Int_UART1	Int_SSC2	Int_SSC1	Int_CCU6SR3	Int_CCU6SR2	Int_CCU6SR1	Int_CCU6SR0	Int_ADC1	Int_ADC2	Int_GPT2	Int_GPT1
r	rw	rw	rw	rw	rw	rw	rw	rw	rw	rw	rw	rw	rw	rw	rw

Field	Bits	Type	Description
RES	31:24	r	**Reserved for future use**

Field	Bits	Type	Description
Int_PORT2	23	rw	**Interrupt Set for PORT2** 0_B **DISABLED** no effect on write 1_B **ENABLE** enables the associated interrupt
Int_MON	22	rw	**Interrupt Set for MON** 0_B **DISABLED** no effect on write 1_B **ENABLE** enables the associated interrupt
Int_DU	21	rw	**Interrupt Set for Differential Unit** 0_B **DISABLED** no effect on write 1_B **ENABLE** enables the associated interrupt
Int_HS2	20	rw	**Interrupt Set for HS2** 0_B **DISABLED** no effect on write 1_B **ENABLE** enables the associated interrupt
Int_HS1	19	rw	**Interrupt Set for HS1** 0_B **DISABLED** no effect on write 1_B **ENABLE** enables the associated interrupt
Int_LS2	18	rw	**Interrupt Set for LS2** 0_B **DISABLED** no effect on write 1_B **ENABLE** enables the associated interrupt
Int_LS1	17	rw	**Interrupt Set for LS1** 0_B **DISABLED** no effect on write 1_B **ENABLE** enables the associated interrupt
RES	16	r	**Reserved for future use**
RES	15	r	**Reserved for future use**
Int_WAKEUP	14	rw	**Interrupt Set for WAKEUP** 0_B **DISABLED** no effect on write 1_B **ENABLE** enables the associated interrupt
Int_EXINT1	13	rw	**Interrupt Set for External Int 1** 0_B **DISABLED** no effect on write 1_B **ENABLE** enables the associated interrupt
Int_EXINT0	12	rw	**Interrupt Set for External Int 0** 0_B **DISABLED** no effect on write 1_B **ENABLE** enables the associated interrupt
Int_UART2	11	rw	**Interrupt Set for UART2** 0_B **DISABLED** no effect on write 1_B **ENABLE** enables the associated interrupt
Int_UART1	10	rw	**Interrupt Set for UART1** 0_B **DISABLED** no effect on write 1_B **ENABLE** enables the associated interrupt
Int_SSC2	9	rw	**Interrupt Set for SSC2** 0_B **DISABLED** no effect on write 1_B **ENABLE** enables the associated interrupt
Int_SSC1	8	rw	**Interrupt Set for SSC1** 0_B **DISABLED** no effect on write 1_B **ENABLE** enables the associated interrupt

Field	Bits	Type	Description
Int_CCU6SR3	7	rw	**Interrupt Set for CCU6 SR3** 0_B **DISABLED** no effect on write 1_B **ENABLE** enables the associated interrupt
Int_CCU6SR2	6	rw	**Interrupt Set for CCU6 SR2** 0_B **DISABLED** no effect on write 1_B **ENABLE** enables the associated interrupt
Int_CCU6SR1	5	rw	**Interrupt Set for CCU6 SR1** 0_B **DISABLED** no effect on write 1_B **ENABLE** enables the associated interrupt
Int_CCU6SR0	4	rw	**Interrupt Set for CCU6 SR0** 0_B **DISABLED** no effect on write 1_B **ENABLE** enables the associated interrupt
Int_ADC1	3	rw	**Interrupt Set for ADC1** 0_B **DISABLED** no effect on write 1_B **ENABLE** enables the associated interrupt
Int_ADC2	2	rw	**Interrupt Set for MU, ADC2** 0_B **DISABLED** no effect on write 1_B **ENABLE** enables the associated interrupt
Int_GPT2	1	rw	**Interrupt Set for GPT2** 0_B **DISABLED** no effect on write 1_B **ENABLE** enables the associated interrupt
Int_GPT1	0	rw	**Interrupt Set for GPT1** 0_B **DISABLED** no effect on write 1_B **ENABLE** enables the associated interrupt

Table 145 RESET of CPU_NVIC_ISER

Register Reset Type	Reset Values	Reset Short Name	Reset Mode	Note
	00000000_H			

Interrupt Clear-Enable Register

CPU_NVIC_ICER	Offset	Reset Value
Interrupt Clear-Enable	180_H	see Table 146

31							24	23	22	21	20	19	18	17	16
RES								Int_PORT2	Int_MON	Int_DU	Int_HS2	Int_HS1	Int_LS2	Int_LS1	RES
r								rw	rw	rw	rw	rw	rw	rw	r
15	14	13	12	11	10	9	8	7	6	5	4	3	2	1	0
RES	Int_WAKEUP	Int_EXINT1	Int_EXINT0	Int_UART2	Int_UART1	Int_SSC2	Int_SSC1	Int_CCU6SR3	Int_CCU6SR2	Int_CCU6SR1	Int_CCU6SR0	Int_ADC1	Int_ADC2	Int_GPT2	Int_GPT1
r	rw	rw	rw	rw	rw	rw	rw	rw	rw	rw	rw	rw	rw	rw	rw

Field	Bits	Type	Description
RES	31:24	r	**Reserved for future use**
Int_PORT2	23	rw	**Interrupt Clear for PORT2** 0_B **DISABLE** on reads the associated interrupt is disabled, no effect on write 1_B **ENABLE** on reads the associated interrupt is enabled, on writes the associated interrupt is disabled
Int_MON	22	rw	**Interrupt Clear for MON** 0_B **DISABLE** on reads the associated interrupt is disabled, no effect on write 1_B **ENABLE** on reads the associated interrupt is enabled, on writes the associated interrupt is disabled
Int_DU	21	rw	**Interrupt Clear for Differential Unit** 0_B **DISABLE** on reads the associated interrupt is disabled, no effect on write 1_B **ENABLE** on reads the associated interrupt is enabled, on writes the associated interrupt is disabled
Int_HS2	20	rw	**Interrupt Clear for HS2** 0_B **DISABLE** on reads the associated interrupt is disabled, no effect on write 1_B **ENABLE** on reads the associated interrupt is enabled, on writes the associated interrupt is disabled
Int_HS1	19	rw	**Interrupt Clear for HS1** 0_B **DISABLE** on reads the associated interrupt is disabled, no effect on write 1_B **ENABLE** on reads the associated interrupt is enabled, on writes the associated interrupt is disabled
Int_LS2	18	rw	**Interrupt Clear for LS2** 0_B **DISABLE** on reads the associated interrupt is disabled, no effect on write 1_B **ENABLE** on reads the associated interrupt is enabled, on writes the associated interrupt is disabled

Field	Bits	Type	Description
Int_LS1	17	rw	**Interrupt Clear for LS1** 0_B **DISABLE** on reads the associated interrupt is disabled, no effect on write 1_B **ENABLE** on reads the associated interrupt is enabled, on writes the associated interrupt is disabled
RES	16	r	**Reserved for future use**
RES	15	r	**Reserved for future use**
Int_WAKEUP	14	rw	**Interrupt Clear for WAKEUP** 0_B **DISABLE** on reads the associated interrupt is disabled, no effect on write 1_B **ENABLE** on reads the associated interrupt is enabled, on writes the associated interrupt is disabled
Int_EXINT1	13	rw	**Interrupt Clear for External Int 1** 0_B **DISABLE** on reads the associated interrupt is disabled, no effect on write 1_B **ENABLE** on reads the associated interrupt is enabled, on writes the associated interrupt is disabled
Int_EXINT0	12	rw	**Interrupt Clear for External Int 0** 0_B **DISABLE** on reads the associated interrupt is disabled, no effect on write 1_B **ENABLE** on reads the associated interrupt is enabled, on writes the associated interrupt is disabled
Int_UART2	11	rw	**Interrupt Clear for UART2** 0_B **DISABLE** on reads the associated interrupt is disabled, no effect on write 1_B **ENABLE** on reads the associated interrupt is enabled, on writes the associated interrupt is disabled
Int_UART1	10	rw	**Interrupt Clear for UART1** 0_B **DISABLE** on reads the associated interrupt is disabled, no effect on write 1_B **ENABLE** on reads the associated interrupt is enabled, on writes the associated interrupt is disabled
Int_SSC2	9	rw	**Interrupt Clear for SSC2** 0_B **DISABLE** on reads the associated interrupt is disabled, no effect on write 1_B **ENABLE** on reads the associated interrupt is enabled, on writes the associated interrupt is disabled
Int_SSC1	8	rw	**Interrupt Clear for SSC1** 0_B **DISABLE** on reads the associated interrupt is disabled, no effect on write 1_B **ENABLE** on reads the associated interrupt is enabled, on writes the associated interrupt is disabled
Int_CCU6SR3	7	rw	**Interrupt Clear for CCU6 SR3** 0_B **DISABLE** on reads the associated interrupt is disabled, no effect on write 1_B **ENABLE** on reads the associated interrupt is enabled, on writes the associated interrupt is disabled

Field	Bits	Type	Description
Int_CCU6SR2	6	rw	**Interrupt Clear for CCU6 SR2** 0_B **DISABLE** on reads the associated interrupt is disabled, no effect on write 1_B **ENABLE** on reads the associated interrupt is enabled, on writes the associated interrupt is disabled
Int_CCU6SR1	5	rw	**Interrupt Clear for CCU6 SR1** 0_B **DISABLE** on reads the associated interrupt is disabled, no effect on write 1_B **ENABLE** on reads the associated interrupt is enabled, on writes the associated interrupt is disabled
Int_CCU6SR0	4	rw	**Interrupt Clear for CCU6 SR0** 0_B **DISABLE** on reads the associated interrupt is disabled, no effect on write 1_B **ENABLE** on reads the associated interrupt is enabled, on writes the associated interrupt is disabled
Int_ADC1	3	rw	**Interrupt Clear for ADC1** 0_B **DISABLE** on reads the associated interrupt is disabled, no effect on write 1_B **ENABLE** on reads the associated interrupt is enabled, on writes the associated interrupt is disabled
Int_ADC2	2	rw	**Interrupt Clear for MU, ADC2** 0_B **DISABLE** on reads the associated interrupt is disabled, no effect on write 1_B **ENABLE** on reads the associated interrupt is enabled, on writes the associated interrupt is disabled
Int_GPT2	1	rw	**Interrupt Clear for GPT2** 0_B **DISABLE** on reads the associated interrupt is disabled, no effect on write 1_B **ENABLE** on reads the associated interrupt is enabled, on writes the associated interrupt is disabled
Int_GPT1	0	rw	**Interrupt Clear for GPT1** 0_B **DISABLE** on reads the associated interrupt is disabled, no effect on write 1_B **ENABLE** on reads the associated interrupt is enabled, on writes the associated interrupt is disabled

Table 146 RESET of CPU_NVIC_ICER

Register Reset Type	Reset Values	Reset Short Name	Reset Mode	Note
	00000000_H			

Interrupt Set-Pending Register

CPU_NVIC_ISPR	Offset	Reset Value
Interrupt Set-Pending	200_H	see Table 147

31							24	23	22	21	20	19	18	17	16
RES								Int_PORT2	Int_MON	Int_DU	Int_HS2	Int_HS1	Int_LS2	Int_LS1	RES
r								rw	rw	rw	rw	rw	rw	rw	r

15	14	13	12	11	10	9	8	7	6	5	4	3	2	1	0
RES	Int_WAKEUP	Int_EXINT1	Int_EXINT0	Int_UART2	Int_UART1	Int_SSC2	Int_SSC1	Int_CCU6SR3	Int_CCU6SR2	Int_CCU6SR1	Int_CCU6SR0	Int_ADC1	Int_ADC2	Int_GPT2	Int_GPT1
r	rw	rw	rw	rw	rw	rw	rw	rw	rw	rw	rw	rw	rw	rw	rw

Field	Bits	Type	Description
RES	31:24	r	**Reserved for future use**
Int_PORT2	23	rw	**Interrupt Set Pending for PORT2** 0_B **Not Pending** on reads the associated interrupt is not pending, no effect on writes 1_B **Pending** the associated interrupt is pending
Int_MON	22	rw	**Interrupt Set Pending for MON** 0_B **Not Pending** on reads the associated interrupt is not pending, no effect on writes 1_B **Pending** the associated interrupt is pending
Int_DU	21	rw	**Interrupt Set Pending for Differential Unit** 0_B **Not Pending** on reads the associated interrupt is not pending, no effect on writes 1_B **Pending** the associated interrupt is pending
Int_HS2	20	rw	**Interrupt Set Pending for HS2** 0_B **Not Pending** on reads the associated interrupt is not pending, no effect on writes 1_B **Pending** the associated interrupt is pending
Int_HS1	19	rw	**Interrupt Set Pending for HS1** 0_B **Not Pending** on reads the associated interrupt is not pending, no effect on writes 1_B **Pending** the associated interrupt is pending
Int_LS2	18	rw	**Interrupt Set Pending for LS2** 0_B **Not Pending** on reads the associated interrupt is not pending, no effect on writes 1_B **Pending** the associated interrupt is pending
Int_LS1	17	rw	**Interrupt Set Pending for LS1** 0_B **Not Pending** on reads the associated interrupt is not pending, no effect on writes 1_B **Pending** the associated interrupt is pending
RES	16	r	**Reserved for future use**
RES	15	r	**Reserved for future use**

Field	Bits	Type	Description
Int_WAKEUP	14	rw	**Interrupt Set Pending for WAKEUP** 0_B **Not Pending** on reads the associated interrupt is not pending, no effect on writes 1_B **Pending** the associated interrupt is pending
Int_EXINT1	13	rw	**Interrupt Set Pending for External Int 1** 0_B **Not Pending** on reads the associated interrupt is not pending, no effect on writes 1_B **Pending** the associated interrupt is pending
Int_EXINT0	12	rw	**Interrupt Set Pending for External Int 0** 0_B **Not Pending** on reads the associated interrupt is not pending, no effect on writes 1_B **Pending** the associated interrupt is pending
Int_UART2	11	rw	**Interrupt Set Pending for UART2** 0_B **Not Pending** on reads the associated interrupt is not pending, no effect on writes 1_B **Pending** the associated interrupt is pending
Int_UART1	10	rw	**Interrupt Set Pending for UART1** 0_B **Not Pending** on reads the associated interrupt is not pending, no effect on writes 1_B **Pending** the associated interrupt is pending
Int_SSC2	9	rw	**Interrupt Set Pending for SSC2** 0_B **Not Pending** on reads the associated interrupt is not pending, no effect on writes 1_B **Pending** the associated interrupt is pending
Int_SSC1	8	rw	**Interrupt Set Pending for SSC1** 0_B **Not Pending** on reads the associated interrupt is not pending, no effect on writes 1_B **Pending** the associated interrupt is pending
Int_CCU6SR3	7	rw	**Interrupt Set Pending for CCU6 SR3** 0_B **Not Pending** on reads the associated interrupt is not pending, no effect on writes 1_B **Pending** the associated interrupt is pending
Int_CCU6SR2	6	rw	**Interrupt Set Pending for CCU6 SR2** 0_B **Not Pending** on reads the associated interrupt is not pending, no effect on writes 1_B **Pending** the associated interrupt is pending
Int_CCU6SR1	5	rw	**Interrupt Set Pending for CCU6 SR1** 0_B **Not Pending** on reads the associated interrupt is not pending, no effect on writes 1_B **Pending** the associated interrupt is pending
Int_CCU6SR0	4	rw	**Interrupt Set Pending for CCU6 SR0** 0_B **Not Pending** on reads the associated interrupt is not pending, no effect on writes 1_B **Pending** the associated interrupt is pending

Field	Bits	Type	Description
Int_ADC1	3	rw	**Interrupt Set Pending for ADC1** 0_B **Not Pending** on reads the associated interrupt is not pending, no effect on writes 1_B **Pending** the associated interrupt is pending
Int_ADC2	2	rw	**Interrupt Set Pending for MU, ADC2** 0_B **Not Pending** on reads the associated interrupt is not pending, no effect on writes 1_B **Pending** the associated interrupt is pending
Int_GPT2	1	rw	**Interrupt Set Pending for GPT2** 0_B **Not Pending** on reads the associated interrupt is not pending, no effect on writes 1_B **Pending** the associated interrupt is pending
Int_GPT1	0	rw	**Interrupt Set Pending for GPT1** 0_B **Not Pending** on reads the associated interrupt is not pending, no effect on writes 1_B **Pending** the associated interrupt is pending

Table 147 RESET of CPU_NVIC_ISPR

Register Reset Type	Reset Values	Reset Short Name	Reset Mode	Note
	00000000_H			

Interrupt Clear-Pending Register

CPU_NVIC_ICPR	Offset	Reset Value
Interrupt Clear-Pending	280_H	see Table 148

31	30	29	28	27	26	25	24	23	22	21	20	19	18	17	16
RES								Int_PORT2	Int_MON	Int_DU	Int_HS2	Int_HS1	Int_LS2	Int_LS1	RES
r								rw	rw	rw	rw	rw	rw	rw	r

15	14	13	12	11	10	9	8	7	6	5	4	3	2	1	0
RES	Int_WAKEUP	Int_EXINT1	Int_EXINT0	Int_UART2	Int_UART1	Int_SSC2	Int_SSC1	Int_CCU6SR3	Int_CCU6SR2	Int_CCU6SR1	Int_CCU6SR0	Int_ADC1	Int_ADC2	Int_GPT2	Int_GPT1
r	rw	rw	rw	rw	rw	rw	rw	rw	rw	rw	rw	rw	rw	rw	rw

Field	Bits	Type	Description
RES	31:24	r	**Reserved for future use**

Field	Bits	Type	Description
Int_PORT2	23	rw	**Interrupt Clear Pending for PORT2** 0_B **Not Pending** on reads the associated interrupt is not pending, no effect on writes 1_B **Pending** on reads the associated interrupt is pending, on writes the status of the associated interrupt is changed to not pending
Int_MON	22	rw	**Interrupt Clear Pending for MON** 0_B **Not Pending** on reads the associated interrupt is not pending, no effect on writes 1_B **Pending** on reads the associated interrupt is pending, on writes the status of the associated interrupt is changed to not pending
Int_DU	21	rw	**Interrupt Clear Pending for Differential Unit** 0_B **Not Pending** on reads the associated interrupt is not pending, no effect on writes 1_B **Pending** on reads the associated interrupt is pending, on writes the status of the associated interrupt is changed to not pending
Int_HS2	20	rw	**Interrupt Clear Pending for HS2** 0_B **Not Pending** on reads the associated interrupt is not pending, no effect on writes 1_B **Pending** on reads the associated interrupt is pending, on writes the status of the associated interrupt is changed to not pending
Int_HS1	19	rw	**Interrupt Clear Pending for HS1** 0_B **Not Pending** on reads the associated interrupt is not pending, no effect on writes 1_B **Pending** on reads the associated interrupt is pending, on writes the status of the associated interrupt is changed to not pending
Int_LS2	18	rw	**Interrupt Clear Pending for LS2** 0_B **Not Pending** on reads the associated interrupt is not pending, no effect on writes 1_B **Pending** on reads the associated interrupt is pending, on writes the status of the associated interrupt is changed to not pending
Int_LS1	17	rw	**Interrupt Clear Pending for LS1** 0_B **Not Pending** on reads the associated interrupt is not pending, no effect on writes 1_B **Pending** on reads the associated interrupt is pending, on writes the status of the associated interrupt is changed to not pending
RES	16	r	**Reserved for future use**
RES	15	r	**Reserved for future use**
Int_WAKEUP	14	rw	**Interrupt Clear Pending for WAKEUP** 0_B **Not Pending** on reads the associated interrupt is not pending, no effect on writes 1_B **Pending** on reads the associated interrupt is pending, on writes the status of the associated interrupt is changed to not pending
Int_EXINT1	13	rw	**Interrupt Clear Pending for External Int 1** 0_B **Not Pending** on reads the associated interrupt is not pending, no effect on writes 1_B **Pending** on reads the associated interrupt is pending, on writes the status of the associated interrupt is changed to not pending

Field	Bits	Type	Description
Int_EXINT0	12	rw	**Interrupt Clear Pending for External Int 0** 0_B **Not Pending** on reads the associated interrupt is not pending, no effect on writes 1_B **Pending** on reads the associated interrupt is pending, on writes the status of the associated interrupt is changed to not pending
Int_UART2	11	rw	**Interrupt Clear Pending for UART2** 0_B **Not Pending** on reads the associated interrupt is not pending, no effect on writes 1_B **Pending** on reads the associated interrupt is pending, on writes the status of the associated interrupt is changed to not pending
Int_UART1	10	rw	**Interrupt Clear Pending for UART1** 0_B **Not Pending** on reads the associated interrupt is not pending, no effect on writes 1_B **Pending** on reads the associated interrupt is pending, on writes the status of the associated interrupt is changed to not pending
Int_SSC2	9	rw	**Interrupt Clear Pending for SSC2** 0_B **Not Pending** on reads the associated interrupt is not pending, no effect on writes 1_B **Pending** on reads the associated interrupt is pending, on writes the status of the associated interrupt is changed to not pending
Int_SSC1	8	rw	**Interrupt Clear Pending for SSC1** 0_B **Not Pending** on reads the associated interrupt is not pending, no effect on writes 1_B **Pending** on reads the associated interrupt is pending, on writes the status of the associated interrupt is changed to not pending
Int_CCU6SR3	7	rw	**Interrupt Clear Pending for CCU6 SR3** 0_B **Not Pending** on reads the associated interrupt is not pending, no effect on writes 1_B **Pending** on reads the associated interrupt is pending, on writes the status of the associated interrupt is changed to not pending
Int_CCU6SR2	6	rw	**Interrupt Clear Pending for CCU6 SR2** 0_B **Not Pending** on reads the associated interrupt is not pending, no effect on writes 1_B **Pending** on reads the associated interrupt is pending, on writes the status of the associated interrupt is changed to not pending
Int_CCU6SR1	5	rw	**Interrupt Clear Pending for CCU6 SR1** 0_B **Not Pending** on reads the associated interrupt is not pending, no effect on writes 1_B **Pending** on reads the associated interrupt is pending, on writes the status of the associated interrupt is changed to not pending
Int_CCU6SR0	4	rw	**Interrupt Clear Pending for CCU6 SR0** 0_B **Not Pending** on reads the associated interrupt is not pending, no effect on writes 1_B **Pending** on reads the associated interrupt is pending, on writes the status of the associated interrupt is changed to not pending

Field	Bits	Type	Description
Int_ADC1	3	rw	**Interrupt Clear Pending for ADC1** 0_B **Not Pending** on reads the associated interrupt is not pending, no effect on writes 1_B **Pending** on reads the associated interrupt is pending, on writes the status of the associated interrupt is changed to not pending
Int_ADC2	2	rw	**Interrupt Clear Pending for MU, ADC2** 0_B **Not Pending** on reads the associated interrupt is not pending, no effect on writes 1_B **Pending** on reads the associated interrupt is pending, on writes the status of the associated interrupt is changed to not pending
Int_GPT2	1	rw	**Interrupt Clear Pending for GPT2** 0_B **Not Pending** on reads the associated interrupt is not pending, no effect on writes 1_B **Pending** on reads the associated interrupt is pending, on writes the status of the associated interrupt is changed to not pending
Int_GPT1	0	rw	**Interrupt Clear Pending for GPT1** 0_B **Not Pending** on reads the associated interrupt is not pending, no effect on writes 1_B **Pending** on reads the associated interrupt is pending, on writes the status of the associated interrupt is changed to not pending

Table 148 RESET of CPU_NVIC_ICPR

Register Reset Type	Reset Values	Reset Short Name	Reset Mode	Note
	00000000_H			

Interrupt Priority Register 0

CPU_NVIC_IPR0 **Offset** **Reset Value**
Interrupt Priority **400_H** **see Table 149**

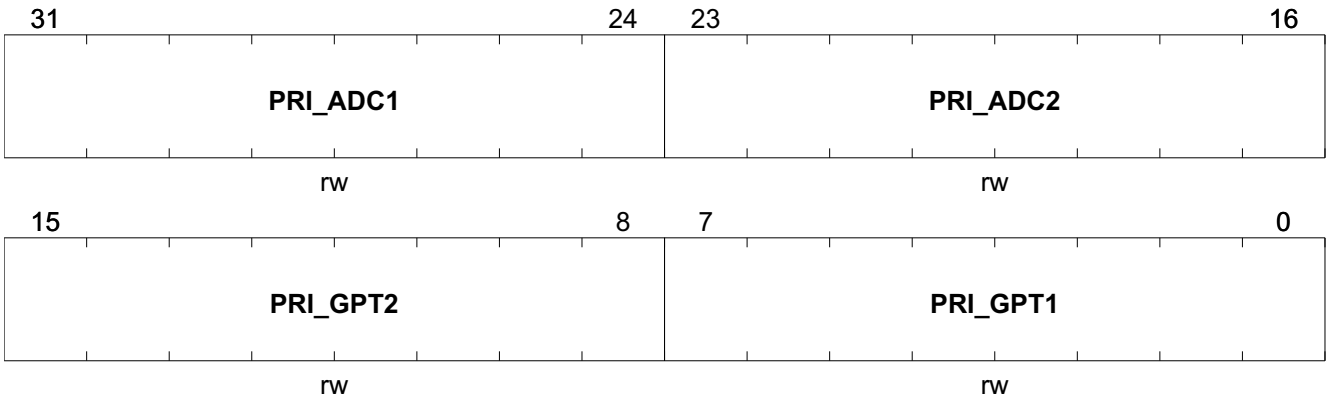

Field	Bits	Type	Description
PRI_ADC1	31:24	rw	**Priority for ADC1**
PRI_ADC2	23:16	rw	**Priority for MU, ADC2**
PRI_GPT2	15:8	rw	**Priority for GPT2**
PRI_GPT1	7:0	rw	**Priority for GPT1**

Table 149 RESET of CPU_NVIC_IPR0

Register Reset Type	Reset Values	Reset Short Name	Reset Mode	Note
	00000000_H			

Interrupt Priority Register 1

CPU_NVIC_IPR1	Offset	Reset Value
Interrupt Priority	404_H	see Table 150

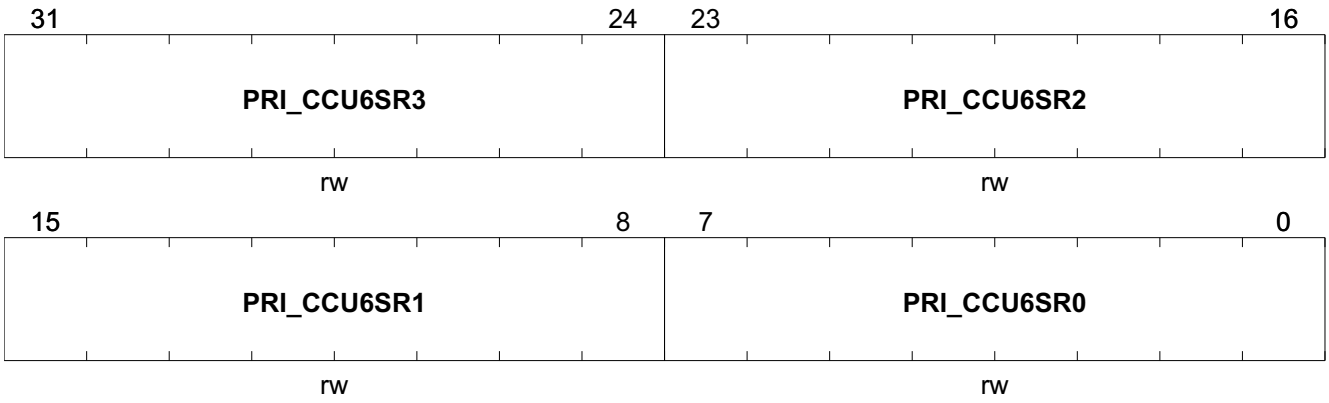

Field	Bits	Type	Description
PRI_CCU6SR3	31:24	rw	**Priority for CCU6 SR3**
PRI_CCU6SR2	23:16	rw	**Priority for CCU6 SR2**
PRI_CCU6SR1	15:8	rw	**Priority for CCU6 SR1**
PRI_CCU6SR0	7:0	rw	**Priority for CCU6 SR0**

Table 150 RESET of CPU_NVIC_IPR1

Register Reset Type	Reset Values	Reset Short Name	Reset Mode	Note
	00000000_H			

Interrupt Priority Register 2

CPU_NVIC_IPR2	Offset	Reset Value
Interrupt Priority	408_H	see Table 151

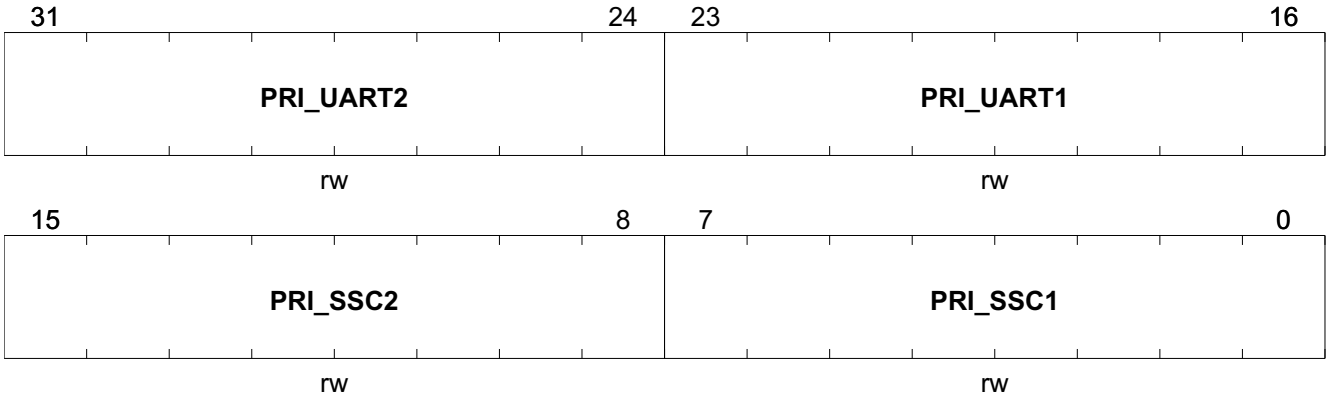

Field	Bits	Type	Description
PRI_UART2	31:24	rw	**Priority for CCU6 UART2**
PRI_UART1	23:16	rw	**Priority for CCU6 UART1**
PRI_SSC2	15:8	rw	**Priority for CCU6 SSC2**
PRI_SSC1	7:0	rw	**Priority for CCU6 SSC1**

Table 151 RESET of CPU_NVIC_IPR2

Register Reset Type	Reset Values	Reset Short Name	Reset Mode	Note
	00000000_H			

Interrupt Priority Register 3

CPU_NVIC_IPR3	Offset	Reset Value
Interrupt Priority	$40C_H$	see Table 152

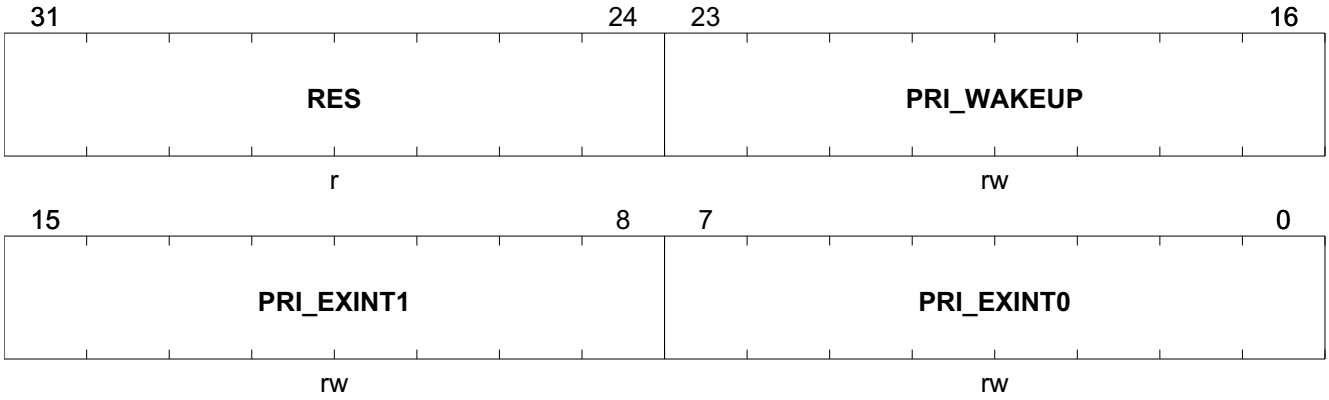

Field	Bits	Type	Description
RES	31:24	r	**Reserved**
PRI_WAKEUP	23:16	rw	**Priority for WAKEUP**
PRI_EXINT1	15:8	rw	**Priority for External Int 1**
PRI_EXINT0	7:0	rw	**Priority for External Int 0**

Table 152 RESET of CPU_NVIC_IPR3

Register Reset Type	Reset Values	Reset Short Name	Reset Mode	Note
	00000000_H			

Interrupt Priority Register 4

CPU_NVIC_IPR4	Offset	Reset Value
Interrupt Priority	410_H	see Table 153

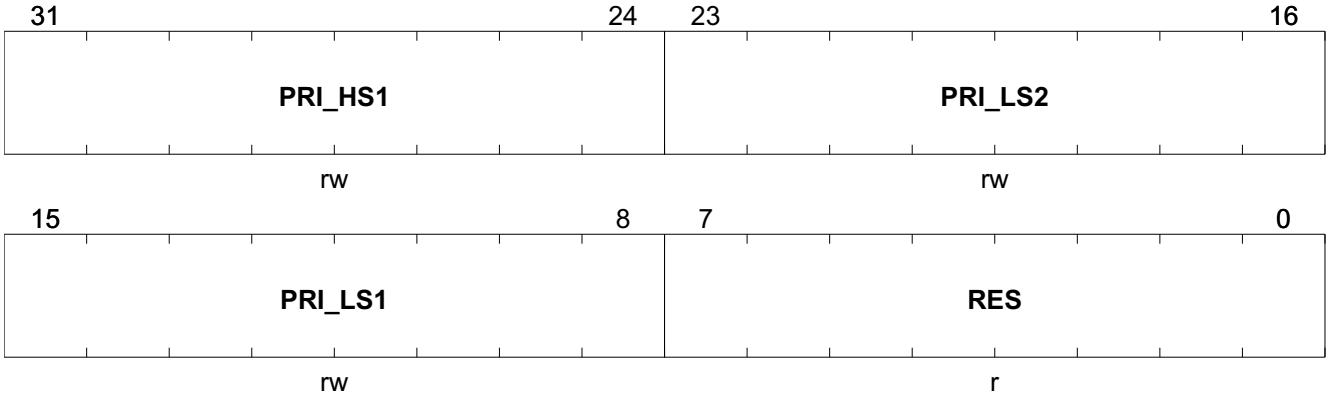

Field	Bits	Type	Description
PRI_HS1	31:24	rw	**Priority for HS1**
PRI_LS2	23:16	rw	**Priority for LS2**

Field	Bits	Type	Description
PRI_LS1	15:8	rw	**Priority for LS1**
RES	7:0	r	**Reserved**

Table 153 RESET of CPU_NVIC_IPR4

Register Reset Type	Reset Values	Reset Short Name	Reset Mode	Note
	00000000_H			

Interrupt Priority Register 5

CPU_NVIC_IPR5	Offset	Reset Value
Interrupt Priority	414_H	see Table 154

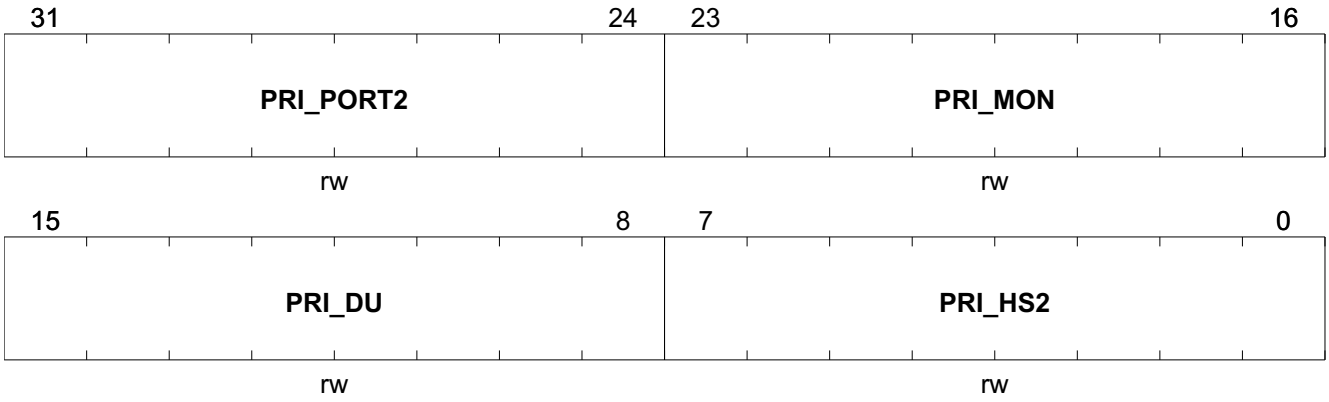

Field	Bits	Type	Description
PRI_PORT2	31:24	rw	**Priority for PORT2**
PRI_MON	23:16	rw	**Priority for MON**
PRI_DU	15:8	rw	**Priority for Differential Unit**
PRI_HS2	7:0	rw	**Priority for HS2**

Table 154 RESET of CPU_NVIC_IPR5

Register Reset Type	Reset Values	Reset Short Name	Reset Mode	Note
	00000000_H			

CPU ID Base Register

CPU_CPUID	Offset	Reset Value
CPU ID Base Register	$D00_H$	see Table 155

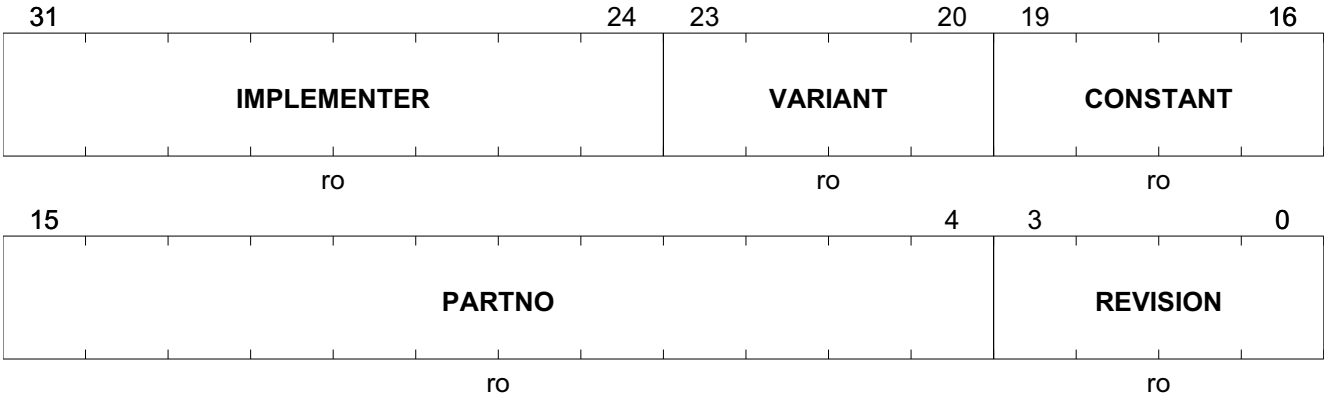

Field	Bits	Type	Description
IMPLEMENTER	31:24	ro	**Implementer Code** Assigned by ARM. Read as 41_H for a processor implemented by ARM.
VARIANT	23:20	ro	**Variant Number** Implementation defined.
CONSTANT	19:16	ro	**Constant** Defines the architecture of the processor. Read as 0_H.
PARTNO	15:4	ro	**Part Number** Implementation defined.
REVISION	3:0	ro	**Revision Number** Implementation defined.

Table 155 RESET of CPU_CPUID

Register Reset Type	Reset Values	Reset Short Name	Reset Mode	Note
	$410CC200_H$			

Interrupt Control and State Register

CPU_ICSR	Offset	Reset Value
Interrupt Control and State Register	$D04_H$	see Table 156

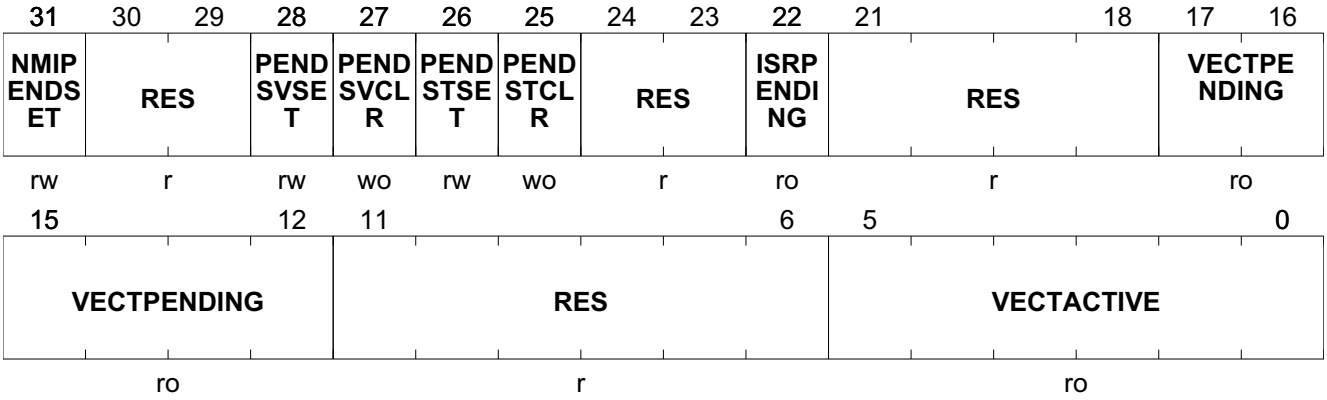

Field	Bits	Type	Description
NMIPENDSET	31	rw	**NMI Set Pending** On writes, makes the NMI exception state pending. On reads, indicates the state of the exception. *Note: Because NMI is the highest-priority exception, normally the processor enters the NMI exception handler as soon as it detects a write of 1 to this bit. Entering the handler then clears this bit to 0. This means a read of this bit by the NMI exception handler returns 1 only if the NMI signal is reasserted while the processor is executing that handler.* 0_B on writes, has no effect. On reads, NMI exception is not pending. 1_B on writes, changes the NMI exception state to pending. On reads, NMI exception is pending.
RES	30:29	r	**Reserved**
PENDSVSET	28	rw	**PENDSV Set Pending** On writes, sets the PendSV exception as pending. On reads, indicates the current state of the exception. *Note: Writing 1 to this bit is the only way to set the PENDSV exception state to pending.* 0_B on writes, has no effect. On reads, PendSV exception is not pending. 1_B on writes, changes PendSV exception state to pending. On reads, PendSV is pending.
PENDSVCLR	27	wo	**PENDSV Clear Pending** Removes the pending status of the PendSV exception 0_B no effect 1_B remove pending state from the PENDSV exception
PENDSTSET	26	rw	**SysTick Exception Set Pending** On writes, sets the SysTick exception as pending. On reads, indicates the current state of the exception. 0_B on writes, has no effect. On reads, SysTick exception is not pending. 1_B on writes, changes SysTick exception state to pending. On reads, SysTick exception is pending.

Field	Bits	Type	Description
PENDSTCLR	25	wo	**SysTick Exception Clear Pending** Removes the pending status of the SysTick exception. *Note: This bit is write-only. On a register read is value is unknown.* 0_B no effect 1_B removes the pending state from the SysTick exception
RES	24:23	r	**Reserved**
ISRPENDING	22	ro	**Interrupt Pending Flag** Excluding NMI and Faults. 0_B interrupt not pending 1_B interrupt is pending
RES	21:18	r	**Reserved**
VECTPENDING	17:12	ro	**VECTPENDING** Indicates the exception number of the highest priority pending enabled exception. Nonzero is the exception number of the highest priority pending enables exception. 0_B no pending exceptions
RES	11:6	r	**Reserved**
VECTACTIVE	5:0	ro	**VECTACTIVE**[1)] Contains the active exception number. Nonzero is the exception number[1)] of the currently active exception. *Note: Subtract 16 from this value to obtain the CMSIS IRQ number that identifies the corresponding bit in the Interrupt Clear-Enable, Set-Enable, Clear-Pending, Set-pending, and Priority Register.* *3. When y write to the ICSR the effect is unpredictable if you:* *- write 1 to the PENDSVSET bit and write 1 to the PENDSVCLR bit* *- write 1 to the PENDSTSET bit and write 1 to the PENDSTCLR bit* 0_B Thread mode

1) This is the same value as IPSR bits 5:0.

Table 156 RESET of CPU_ICSR

Register Reset Type	Reset Values	Reset Short Name	Reset Mode	Note
	00000000_H			

Application Interrupt/Reset Control Register

CPU_AIRCR	Offset	Reset Value
Application Interrupt/Reset Control Register	$D0C_H$	see Table 157

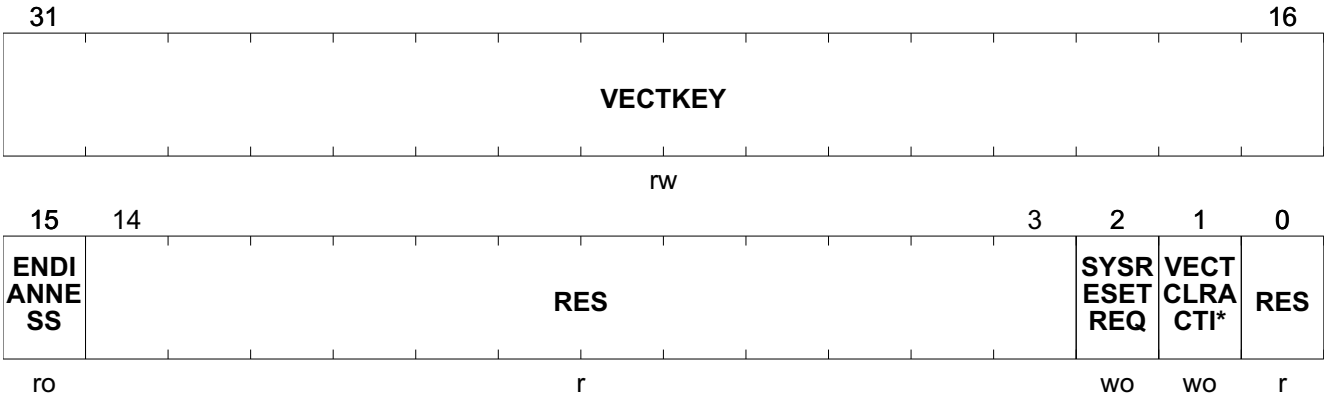

Field	Bits	Type	Description
VECTKEY	31:16	rw	**Vector Key** Register writes must write $05FA_H$ to this field, otherwise the write is ignored. On reads, returns Unknown.
ENDIANNESS	15	ro	**Data Endianness** 0_B little endian 1_B big endian
RES	14:3	r	**Reserved**
SYSRESETREQ	2	wo	**System Reset Request** This bit reads as 0_B. 0_B no effect 1_B request a system level reset
VECTCLRACTIVE	1	wo	**VECTCLRACTIVE** Reserved for debug use. This bit reads as 0_B. *Note: When writing to this register you must write 0_B to this bit, otherwise behavior is **unpredictable**.*
RES	0	r	**Reserved**

Table 157 RESET of CPU_AIRCR

Register Reset Type	Reset Values	Reset Short Name	Reset Mode	Note
	$FA050000_H$			

System Control Register

CPU_SCR	Offset	Reset Value
System Control Register	$D10_H$	see Table 158

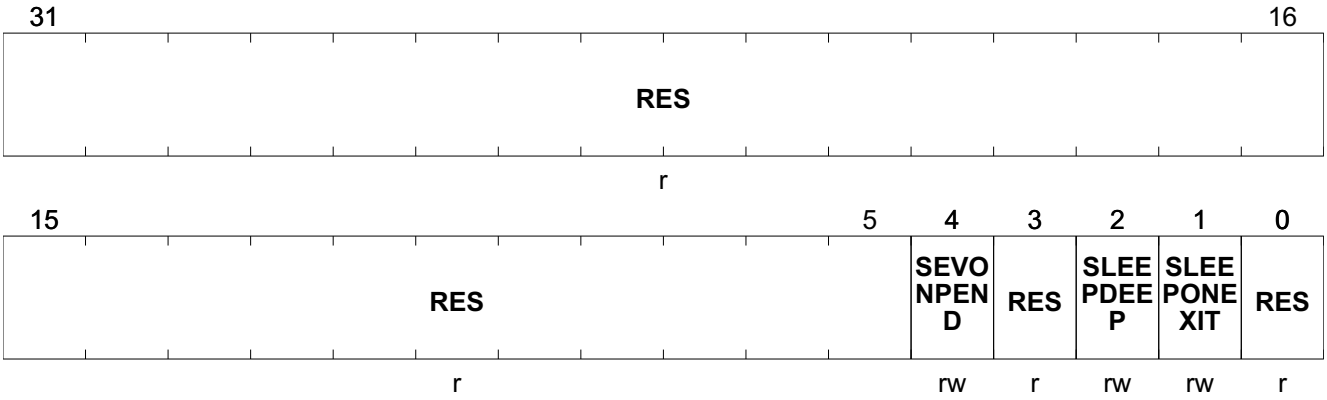

Field	Bits	Type	Description
RES	31:5	r	**Reserved**
SEVONPEND	4	rw	**SEVONPEND** Send event on pending bit. When an event or interrupt enters pending state, the event signal wakes up the processor from WFE. If the processor is not waiting for an event, the event is registered and affects the next WFE. The processor also wakes up on execution of an SEV instruction or an external event. 0_B only enabled interrupts or events can wake-up the processor, disabled interrupts are excluded 1_B enabled events and all interrupts, including disabled interrupts, can wake-up the processor
RES	3	r	**Reserved**
SLEEPDEEP	2	rw	**Sleep Deep** Controls whether the processor uses sleep or deep sleep as its low power mode. 0_B sleep 1_B deep sleep
SLEEPONEXIT	1	rw	**Sleep on Exit** Indicates sleep-on-exit when returning from Handler mode to Thread mode. Setting this bit to 1 enables an interrupt driven application to avoid returning to an empty main application. 0_B do not sleep when returning to Thread mode 1_B enter sleep, or deep sleep, on return from an ISR to Thread mode
RES	0	r	**Reserved**

Table 158 RESET of CPU_SCR

Register Reset Type	Reset Values	Reset Short Name	Reset Mode	Note
	00000000_H			

Configuration Control Register

CPU_CCR	Offset	Reset Value
Configuration Control Register	$D14_H$	see Table 159

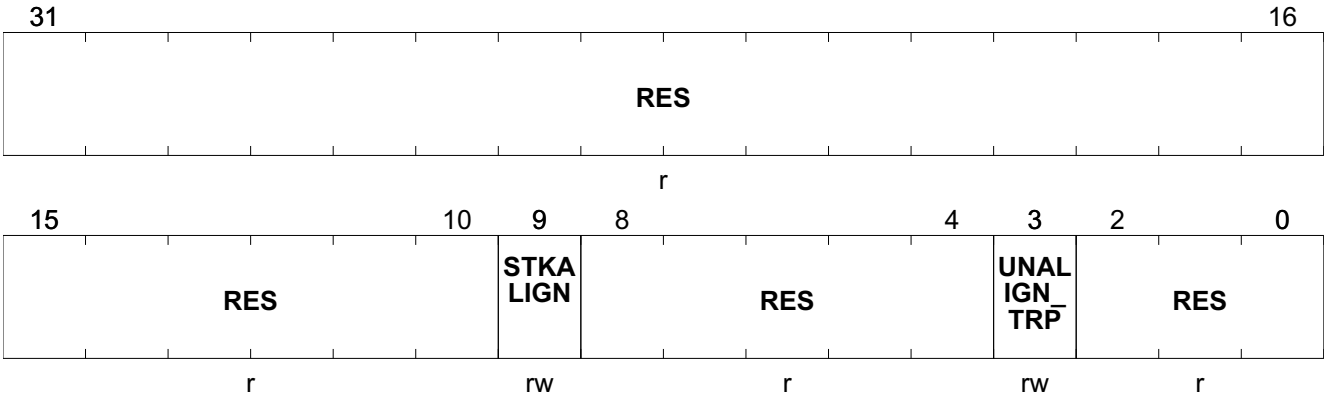

Field	Bits	Type	Description
RES	31:10	r	**Reserved**
STKALIGN	9	rw	**STKALIGN** Always reads as one, indicates 8-byte stack alignment on exception entry. On exception entry, the processor uses bit[9] of the stacked PSR to indicate the stack alignment. On return from the exception it uses this stacked bit to restore the correct stack alignment
RES	8:4	r	**Reserved**
UNALIGN_TRP	3	rw	**UNALIGN_TRP** Indicates that all unaligned accesses generate a HardFault. Always reads as 0_B.
RES	2:0	r	**Reserved**

Table 159 RESET of CPU_CCR

Register Reset Type	Reset Values	Reset Short Name	Reset Mode	Note
	00000204_H			

System Handler Priority Register 2

CPU_SHPR2	Offset	Reset Value
System Handler Priority Register 2	$D1C_H$	see Table 160

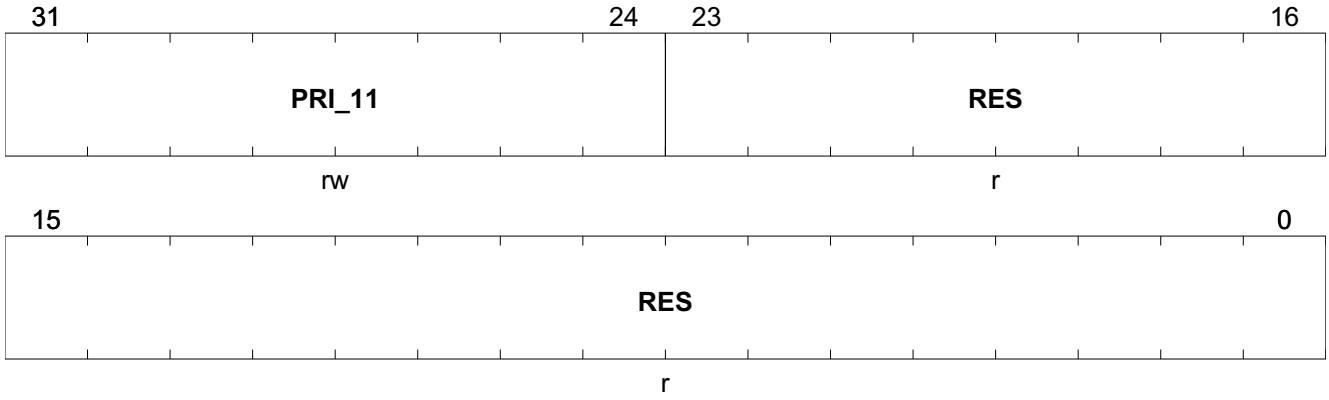

Field	Bits	Type	Description
PRI_11	31:24	rw	**Priority of System Handler 11, SVCall**
RES	23:0	r	**Reserved**

Table 160 RESET of CPU_SHPR2

Register Reset Type	Reset Values	Reset Short Name	Reset Mode	Note
	00000000_H			

System Handler Priority Register 3

CPU_SHPR3	Offset	Reset Value
System Handler Priority Register 3	$D20_H$	see Table 161

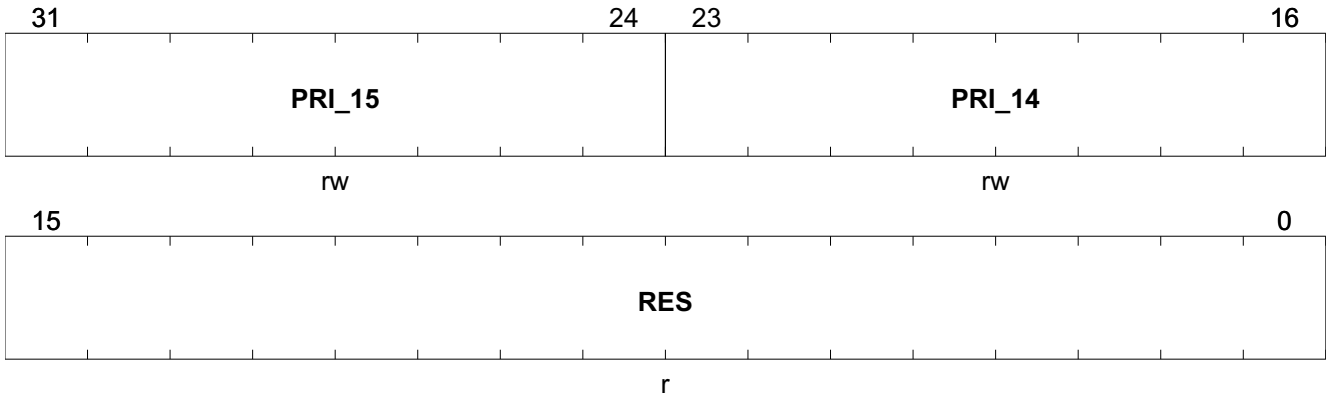

Field	Bits	Type	Description
PRI_15	31:24	rw	**Priority of System Handler 15, SysTick**
PRI_14	23:16	rw	**Priority of System Handler 14, PendSV**
RES	15:0	r	**Reserved**

Table 161 RESET of CPU_SHPR3

Register Reset Type	Reset Values	Reset Short Name	Reset Mode	Note
	00000000_H			

9.5 Instruction Set Summary

This chapter provides the Instruction set. Table 162 shows the instructions and their cycle counts. The cycle counts are based on a system with zero wait states.

Within the assembler syntax, depending on the operation, the <op2> field can be replaced with one of the following options:

- a simple register
- an immediate shifted register
- a register shifted register
- an immediate value

For brevity, not all load and store addressing modes are shown.

Table 162 uses the following abbreviations in the cycles column:

- P for the number of cycles required for a pipeline refill.
- B for the number of cycles required to perform the barrier operation.
- N for the number of registers in the register list to be loaded or stored, including PC or LR.
- W for the number of cycles spent waiting for an appropriate event.

Table 162 Instruction Set Summary

Operation	Description	Mnemonic	Cycles (without wait states)
Move	Register	MOV Rd, Rm	1
Add	Add	ADD Rd, Rn, <op2>	1
	Add with carry	ADCS Rd, Rn, Rm	1
ADR	Address to Register	ADR Rd, <label>	1
Subtract	Subtract	SUB Rd, Rn, <op2>	1
	Subtract with carry	SBCS Rd, Rn, Rm	1
	Reverse	RSBS Rd, Rn, #0	1
Multiply	Multiply, 32-bit result	MULS Rd, Rn, Rm	1
Compare	Compare	CMP Rn, <op2>	1
	Negative	CMN Rn, Rm	1
Logical	AND bitwise	ANDS Rd, Rn, <op2>	1
	Exclusive OR	EORS Rd, Rn, Rm	1
	OR	ORRS Rd, Rn, Rm	1
	Bit clear	BICS Rd, Rn, <op2>	1
	Move NOT bitwise	MVNS Rd, Rm	1
	AND test	TST Rn, Rm	1
Shift	Logical shift left	LSLS Rd, Rn, #<imm>	1
	Logical shift left	LSLS Rd, Rn, Rs	1
	Logical shift right	LSRS Rd, Rn, #<imm>	1
	Logical shift right	LSRS Rd, Rn, Rs	1
	Arithmetic shift right	ASRS Rd, Rn, #<imm>	1
	Arithmetic shift right	ASRS Rd, Rn, Rs	1
Rotate	Rotate right	ROR Rd, Rn, Rs	1

Table 162 Instruction Set Summary (cont'd)

Operation	Description	Mnemonic	Cycles (without wait states)
Load	Word	LDR Rt, [Rn, <op2>]	2[1)]
	Halfword	LDRH Rt, [Rn, <op2>]	2[1)]
	Byte	LDRB Rt, [Rn, <op2>]	2[1)]
	Signed halfword	LDRSH Rt, [Rn, <op2>]	2[1)]
	Signed byte	LDRSB Rt, [Rn, <op2>]	2[1)]
	Register from PC relative address	LDR Rt, label	2[1)]
	Multiple register, increment after	LDM Rn, {<reglist>}	1 + N
Store	Word	STR Rt, [Rn, <op2>]	2[1)]
	Halfword	STRH Rt, [Rn, <op2>]	2[1)]
	Byte	STRB Rt, [Rn, <op2>]	2[1)]
	Multiple register, increment after	STM Rn, {<reglist>}	1 + N
Push	Push registers onto stack	PUSH {<reglist>}	1 + N
Pop	Pop registers from stack	POP {<reglist>}	1 + N
Branch	Conditional	B <cc> <label>	1 or 1 + P[2)]
	Unconditional	B <label>	1 + P
	With link	BL <label>	1 + P
	Indirect	BX Rm	1 + P
	Indirect with link	BLX Rm	1 + P
State change	Supervisor call	SVC #<imm>	–
	Disable interrupts	CPSID i	1 or 2
	Enable interrupts	CPSIE i	1 or 2
	Move to general register from special register	MRS Rd, <specreg>	1 or 2
	Move to special regsiter from general register	MSR <specreg>, Rn	1 or 2
	Breakpoint	BKPT #<imm>	–
Extend	Signed halfword to word	SXTH Rd, Rm	1
	Signed byte to word	SXTB Rd, Rm	1
	Unsigned halfword	UXTH Rd, Rm	1
	Unsigned byte	UXTB Rd, Rm	1
Bit field	Clear	BICS Rd, Rn, Rm	1
Reverse	Bytes in word	REV Rd, Rm	1
	Bytes in both halfwords	REV16 Rd, Rm	1
	Signed bottom halfword	REVSH Rd, Rm	1
	Subtract	RSBS Rd, Rn, #0	1

Table 162 Instruction Set Summary (cont'd)

Operation	Description	Mnemonic	Cycles (without wait states)
Hint	Send event	SEV	1
	Wait for event	WFE	1 + W
	Wait for interrupt	WFI	1 + W
	No operation	NOP	1
Barriers	Instruction synchronization	ISB	1 + B
	Data memory	DMB	1 + B
	Data synchronization	DSB	1 + B

1) Neighboring load and store single instructions can pipeline their address and data phases. This enables these instructions to complete in a singleexecution cycle.

2) Conditional branch completes in a single cycle if the branch is not taken.

10 Address Space Organization

The embedded Cortex-M0 MCU offers the following address space organization:

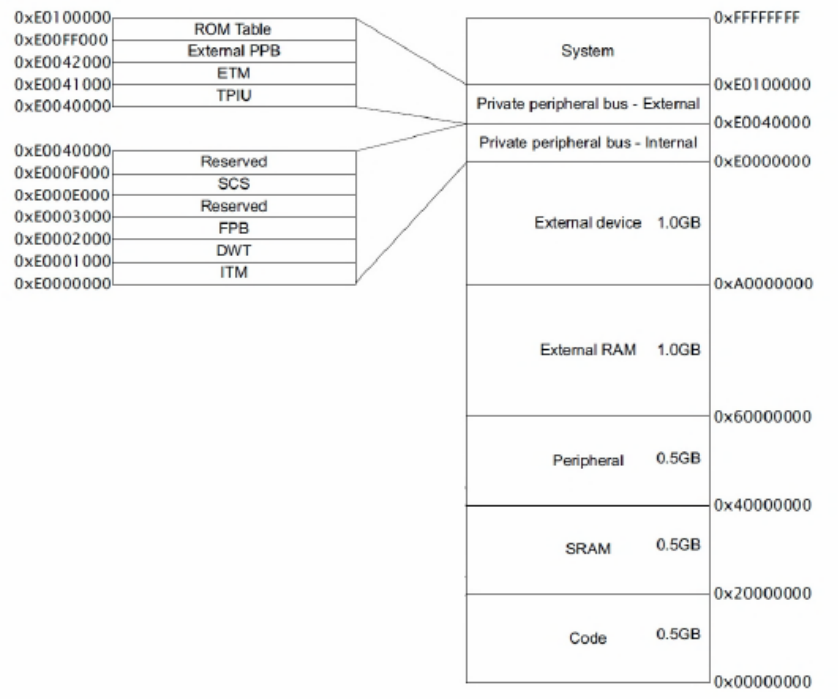

Figure 46 Original Cortex-M0 Memory Map

The TLE984xQX manipulates operands in the following memory spaces:

- Up to 64 KByte of Flash memory (product variant dependant) in code space
- 24 KB Boot ROM memory in code space (used for boot code and IP storage)
- 4 KB (product variant dependant) RAM memory in code space and data space (RAM can be read/written as program memory or external data memory)
- Special function registers (SFRs) in peripheral linear address space, up to 0.5 GBytes

The figure below shows the detailed address alignment of TLE984xQX:

The on-chip memory modules available in the TLE984xQX are:

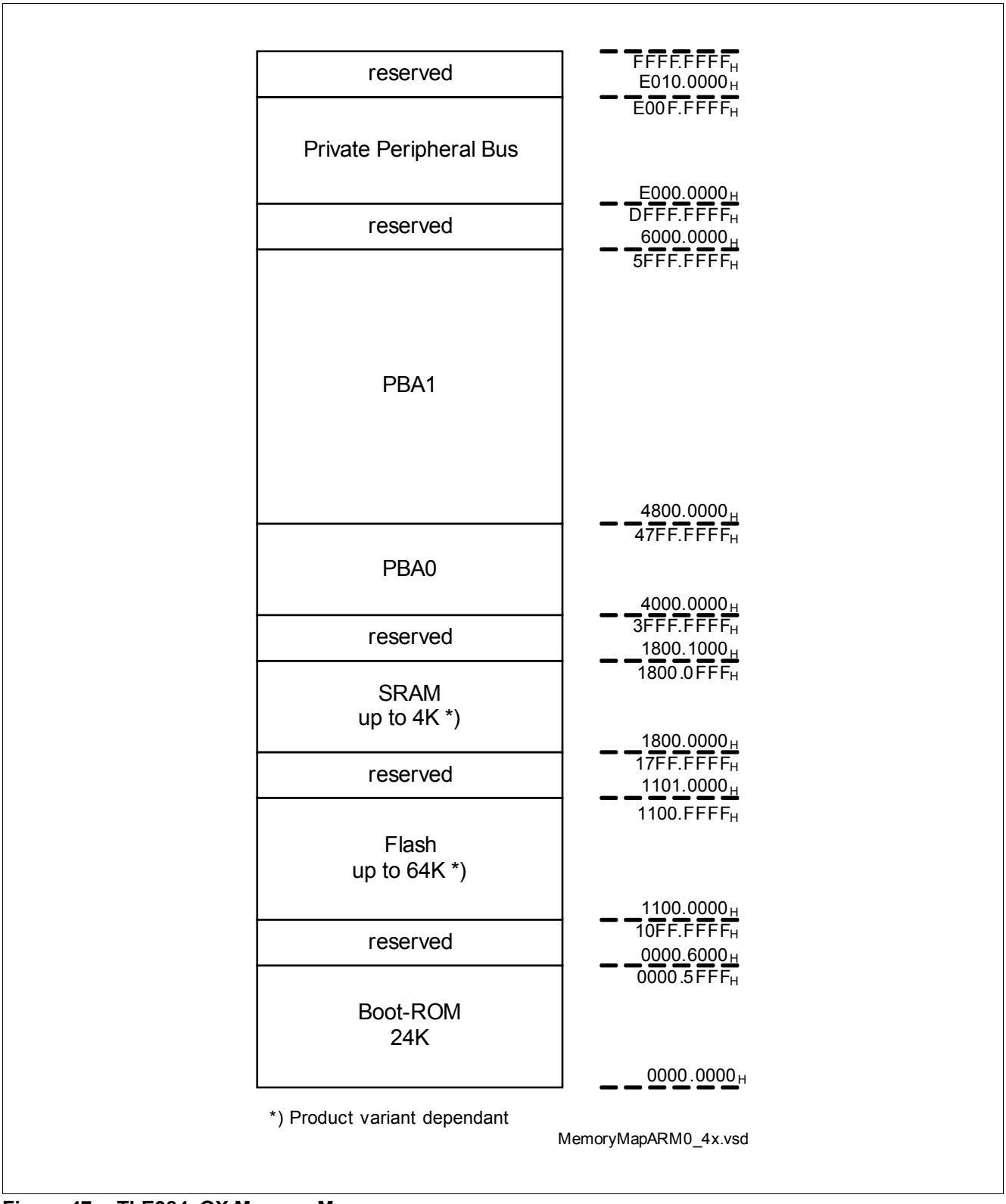

Figure 47 TLE984xQX Memory Map

Each module provides, beside the physical memory implementation, standard AHB-Lite interfaceand Error Correction Code (ECC) logic if needed.

Table 163 Memory Map

Start (hex)	End (hex)	Space Name	Usage
0000_0000	0000_5FFF	Code/Data	Boot-ROM, 24 KBytes
0000_6000	10FF_FFFF	Reserved	Reserved
1100_0000	1100_FFFF	Code/Data	Flash, up to 64 KBytes[1)]
1101_0000	17FF_FFFF	Reserved	Reserved
1800_0000	1800_0FFF	Code/Data	SRAM, up to 4 KBytes[1)]
1800_1000	3FFF_FFFF	Reserved	Reserved
4000_0000	47FF_FFFF	Peripheral 0	Peripheral 0 (PBA0)
4800_0000	5FFF_FFFF	Peripheral 1	Peripheral 1 (PBA1)
6000_0000	DFFF_FFFF	Reserved	reserved
E000_0000	E00F_FFFF	PPB, Private Peripheral Bus	CPU
E010_0000	FFFF_FFFF	Vendor specific	reserved

1) Product variant dependant

Table 164 Peripheral Memory Map

Bus Structure	Modules	Start Address	End Address
Peripherals 0	Reserved	40000000_H	$40003FFF_H$
	ADC1	40004000_H	$40007FFF_H$
	Reserved	40008000_H	$4000BFFF_H$
	CCU6	$4000C000_H$	$4000FFFF_H$
	GPT12	40010000_H	$40013FFF_H$
	Reserved	40014000_H	$4001BFFF_H$
	LS	$4001C000_H$	$4001FFFF_H$
	Reserved	40020000_H	$40023FFF_H$
	HS	40024000_H	$40027FFF_H$
	Reserved	40028000_H	$47FFFFFF_H$
Peripherals 1	Reserved	48000000_H	$48003FFF_H$
	T2	48004000_H	$48004FFF_H$
	T21	48005000_H	$48005FFF_H$
	Reserved	48006000_H	$48017FFF_H$
	MF	48018000_H	$4801BFFF_H$
	ADC2	$4801C000_H$	$4801DFFF_H$
	LIN	$4801E000_H$	$4801FFFF_H$
	UART1	48020000_H	$48021FFF_H$
	UART2	48022000_H	$48023FFF_H$
	SSC1	48024000_H	$48025FFF_H$
	SSC2	48026000_H	$48027FFF_H$
	PORT	48028000_H	$48029FFF_H$
	Reserved	$4802A000_H$	$50003FFF_H$
	PMU	50004000_H	$50004FFF_H$
	SCU	50005000_H	$50005FFF_H$
	SCUPM	50006000_H	$50006FFF_H$
	Reserved	50007000_H	$5FFFFFFF_H$

11 Memory Control Unit

11.1 Features

- Provides Memory access to ROM, RAM, NVM, Config Sector through AHB-Lite Interface
- MBIST for RAM
- MBIST for ROM
- NVM Configuration with Special Function Registers through AHB-Lite Interface
- Hardware Memory Protection Logic

11.2 Introduction

11.2.1 Block Diagram

The Memory Control Unit is divided in the following sub-modules:

- NVM Memory module (embedded Flash Memory)
- RAM memory module
- BootROM memory module
- Memory protection Unit (MPU) module
- LMB (Local Memory Bus) interface logic.

A block diagram view of the Memory Control Unit, together with the main interface signals, is shown in the **Figure 48**.

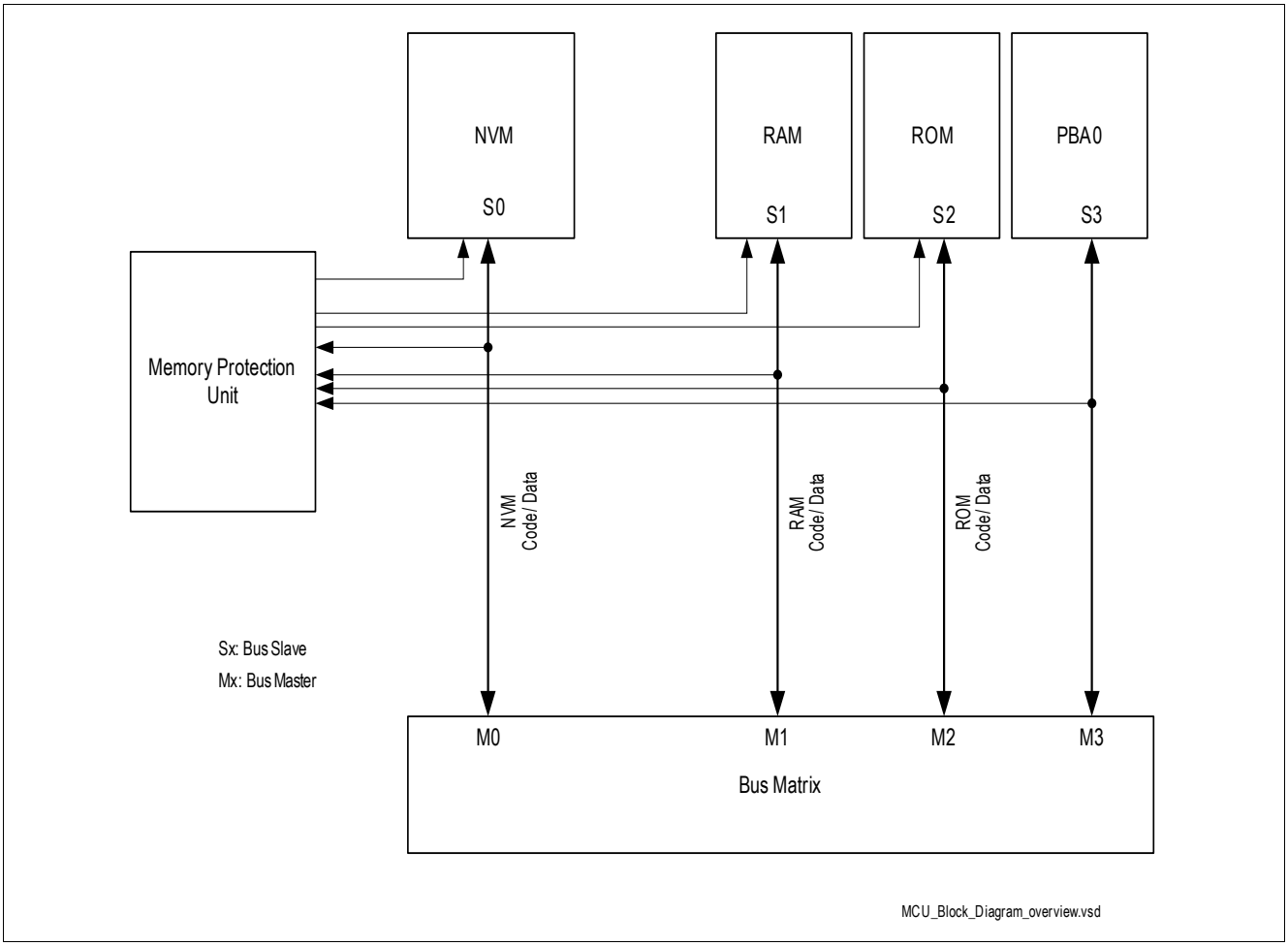

Figure 48 Memory Control Unit Block View

Functional Features for RAM

- 4 KB (product variant dependant) RAM
- Error correction code (ECC) for detection of single bit and double bit errors and dynamic correction of single bit errors
- Single byte access

As shown in the **Figure 48**, the Memory Control Unit interface communicates with the external world, mainly the core, via 4 AHB-Lite interfaces, Data/Code access to the NVM, BootROM and RAM plus an access to the NVM internal registers. The AMBA bus matrix block decodes the access requests coming from the masters and forwards them to the target module interface together with the required sideband signals. The AMBA bus matrix block provides all the needed interface functions between the masters and the memory peripheral. It will generate proper HSEL signals, and multiplex the response coming from the modules. In addition, the AMBA bus matrix block takes care of forwarding the transfer according the a fixed priority policy described in the AMBA chapter.

Besides the AHB-Lite and sideband signals, the Memory Control Unit has access to further Core specific signals, relevant for memory protection .

11.3 NVM Module (Flash Memory)

The Flash memory provides an embedded user-programmable non-volatile memory, allowing fast and reliable storage of user code and data.

A complete description of the Flash memory features can be found in **Chapter 12**.

11.4 BootROM Module

The TLE984xQX BootROM module provides physical implementation of the memory module as well as needed complementary features and interface towards the core.

The module provides proper access through a 32-bit AHB-Lite data interface multiplexed on M0 system bus for code/data access.

The BootROM module in TLE984xQX has a capacity of 24 Kbyte, organized with words of 32 bits.

The BootROM contents consists basically of three parts, used for:

- Startup and boot SW
- Boot Strap Loader routines
- User routines

11.4.1 BootROM Addressing

The BootROM, as visible from the memory map, is mapped starting at the address range 00000000H - 00005FFFH.After any reset, the device hardware-controlled start address is 00000000H. At this location, the default VTOR to be used is stored.

11.4.2 BootROM Firmware Program Structure

The BootROM firmware provides basic functionality required to be executed after reset and routines for specific operation, such as:

- Startup routines, which is the main control firmware in the BootROM executed after every reset. This routine checks which kind of reset was issued and accordingly preforms different kinds of operation to proper configure the device.
- Bootstrap loader, which provides basic functionality for code and data upload via LIN or UART into the RAM or NVM module.
- User routines, which provide functions for proper NVM operation handling and other useful ready-to -use routines designed for the customer.

11.5 RAM Module

The TLE984xQX RAM module provides physical implementation of the memory module as well as needed complementary features and interface towards the core.

The module provides proper access through a 32-bit AHB-Lite data interface multiplexed on M0 system bus for code/data access.

The RAM module in TLE984xQX has a capacity of 4 Kbyte, organized with words of 32 bits.

The module support 1 bit Error correction and 2 bits error detection per 32-bit word (actually requiring 7 bits parity per word). When an ECC error occurs, the corresponding status flag in the register EDCSTAT will be set. A double bit error can be configured via the interrupt enable bit in register EDCCON to trigger an exception.

11.5.1 RAM Addressing

The RAM, as visible from the memory map, is mapped at the address range 18000000H - 18000FFF. The module is mapped in the code area of the M0 map regions and can be used as program memory for code fetching as well as data storing.

11.6 Memory Protection Unit (MPU)

The target of the memory protection scheme is to prevent unauthorized read out of critical data and user IPs from the BootROM and NVM as well as to prevent accidental memory data modification.

The TLE984xQX protection scheme is divided in 2 parts interacting together.

The first memory protection scheme is firmware based and involves the blocking of all external access to the device. More information on the firmware based protection scheme can be found in **Chapter 11.6.3**

The second memory protection scheme is hardware based; The “source” address, from which a memory read instruction is fetched, and the “target” address, where addressed data are stored, are checked by the Memory Protection Unit (MPU) to determine if the access must be blocked. Read instructions executed from an unsafe memory address (e.g. RAM) that target the BootROM or NVM are blocked when the respective protection mode is enabled. The hardware protection scheme is further described in Section **Chapter 11.6.2**.

11.6.1 Memory Protection Regions

The TLE984xQX provides the following protection regions:

- BootROM region
- Customer BSL region BootROM
- Linear NVM region
- Non-Linear NVM region

The protection scheme implemented for the NVM memory module supports 3 different protection regions. On each region the protection feature can be enabled or disabled independently according to the mechanism and limitation further explained in the **Chapter 11.6.2.2**

The **Figure 49** shows the NVM memory regions supported by the protection mechanism.

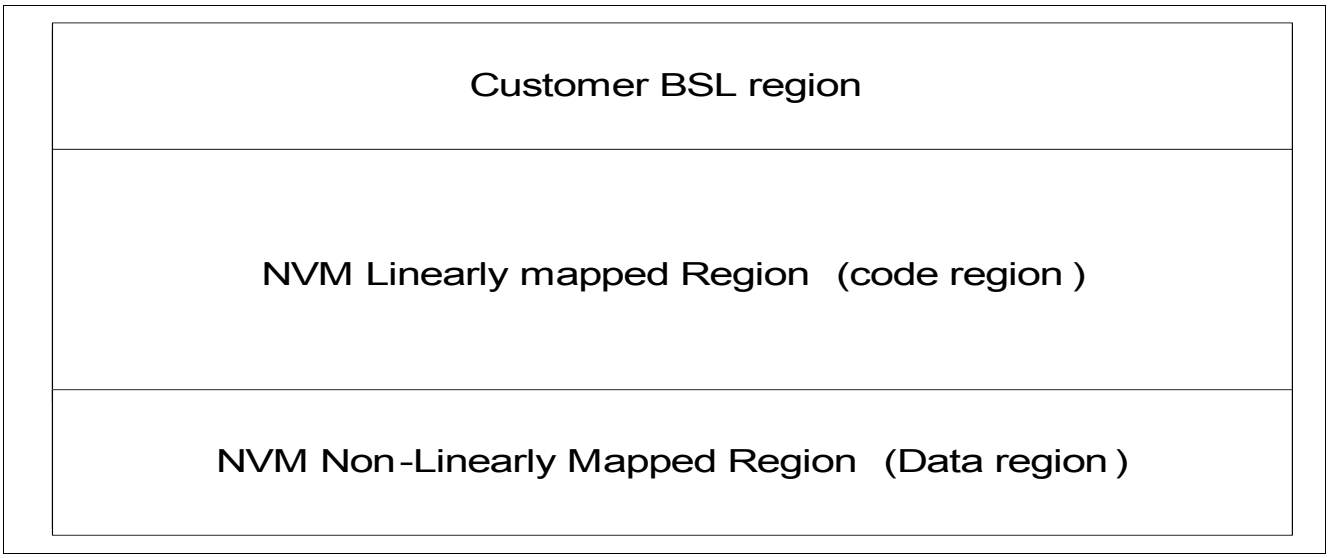

Figure 49 NVM Protection Regions

11.6.2 Hardware Protection Mode

The hardware protection mode controls the access right on each memory or memory region available. Every access to any memory is checked against the memory protection settings and accordingly executed or rejected.

For the TLE984xQX, the BootROM protection mode is always enabled (hardware default) and it can never be disabled. The NVM protection modes can instead be enabled separately for customer BSL, linear and non-linear

mapped ranges. While the BootROM protection mode is enabled, the NVM protection mode may be enabled as well to further prevent code read out.

Regardless the protection mode enabling, the following accesses are always be possible:

- Data reading instructions executed from the BootROM targeting BootROM itself or the RAM
- Data reading instructions executed from the customer BSL NVM region targeting customer BSL NVM region itself, non-linearly mapped NVM region or RAM
- Data reading instructions executed from the linearly mapped NVM region targeting linearly mapped NVM region itself, non-linearly mapped NVM region or RAM
- Data reading instructions executed from the non-linearly mapped NVM region targeting RAM
- Data reading instructions executed from the RAM targeting RAM itself
- Instruction fetch into any region
- Data read access to the Interrupt vector table (depending on the VTOR settings)

Unauthorized data reading instructions will be detected and consequently blocked.

11.6.2.1 BootROM Protection Mode

The BootROM read protection modes is enabled by default and consequently the following accesses are restricted:

- Data reading instructions executed from the NVM, or RAM targeting BootROM

Figure 50 shows all the data reading instructions authorized when only the BootROM protection is enabled (NVM protection disabled).

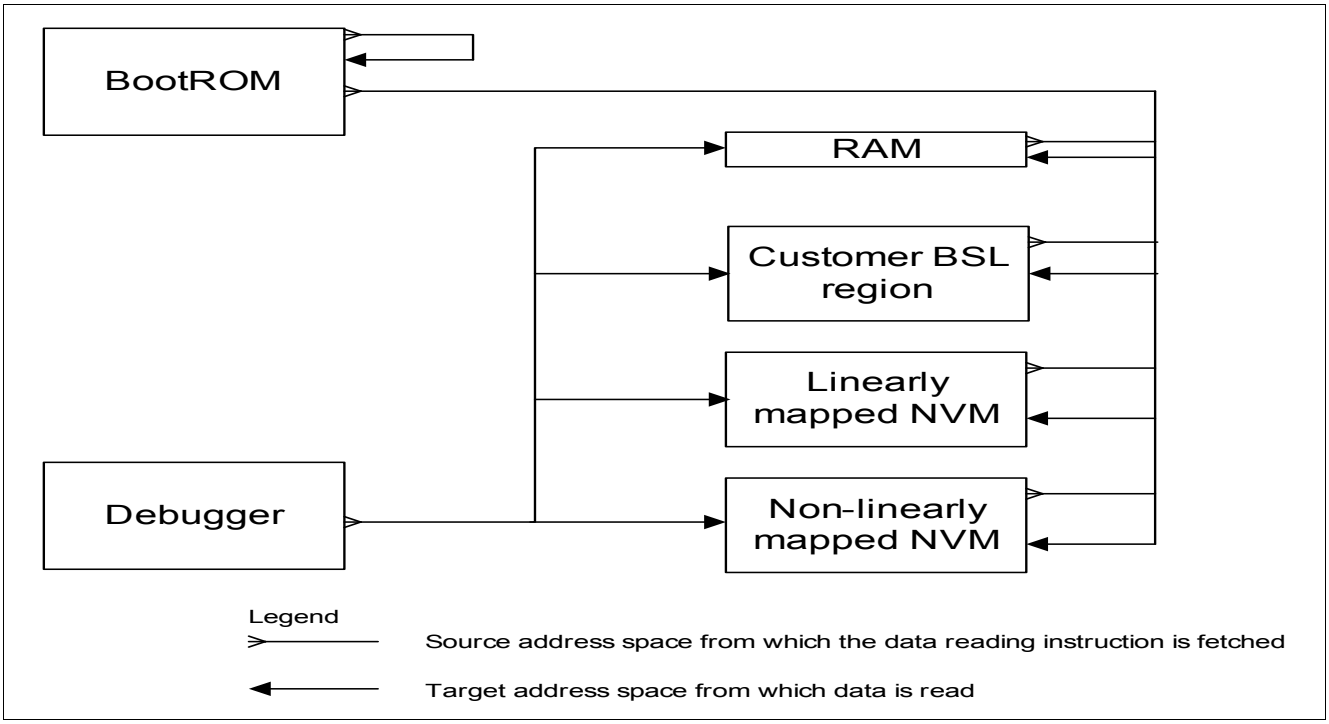

Figure 50 BootROM Protection Mode enabled

If the BootROM read protection mode is enabled without enabling of any NVM protection mode

- Data reading instructions executed from NVM or RAM can target itself or one another
- Data reading instructions executed from the BootROM can target itself, NVM or RAM
- Data reading access issued by the debugger can target NVM or RAM

In addition, to avoid an indirect leak of information by hacking through the debugger, breakpoints set and step through features are disabled on the BootROM. In case debugger issues such a command, the command is suspended till the moment in which the code execution leaves the read protected region (BootROM). More information about protection against debugger activity can be found in **Chapter 11.7**

11.6.2.2 NVM Protection Modes

the NVM address space is divided into the three supported NVM regions: Customer BSL, Linearly mapped, Non-Linearly mapped region.

The Customer BSL region is supposed to be used for special user code that might not be changed over device life time. Since this region is anyhow meant to host user executable code, the region is linearly mapped even if, to distinguish it from standard user code region, it is named “Customer BSL”.

The Linearly mapped region is supposed to be used for user standard application code while the Non-Linearly mapped region is meant to be used for data storage even if code execution is not prevented.

The protection on each of the region is individually controlled by the setting of the NVM_PROT_STS register bits.Further details regarding the NVM region protection enable/disable are described in the **Chapter 11.6.2.2.4**

11.6.2.2.1 Customer BSL Region Protection Mode

The Customer BSL Region protection can be controlled via proper dedicated Password as described in the **Chapter 11.6.2.2.4**.

When its write protection is enabled, any operation capable to change the NVM values stored in this region is blocked. For example, neither a program nor an erase can be executed.

In case the memory protection unit (MPU) and NVM control logic detect that the target address belongs to this region and that write protection is set, a proper alarm signal is forwarded to the NVM module to prevent the NVM state machine from accepting any program or erase command (including fast invalidation). This prevents inadvertent destruction of stored data when protection is set.

When Customer BSL region read protection is enabled, the following accesses are restricted:

- Data reading instructions executed from any other memory region (BootROM, RAM, Linear NVM and Non-Linear NVM) targeting the Customer BSL region
- Data reading accesses triggered by debugger targeting the Customer BSL region

Figure 51 shows all the data reading instructions authorized when both the BootROM and Customer BSL Region read protections are enabled.

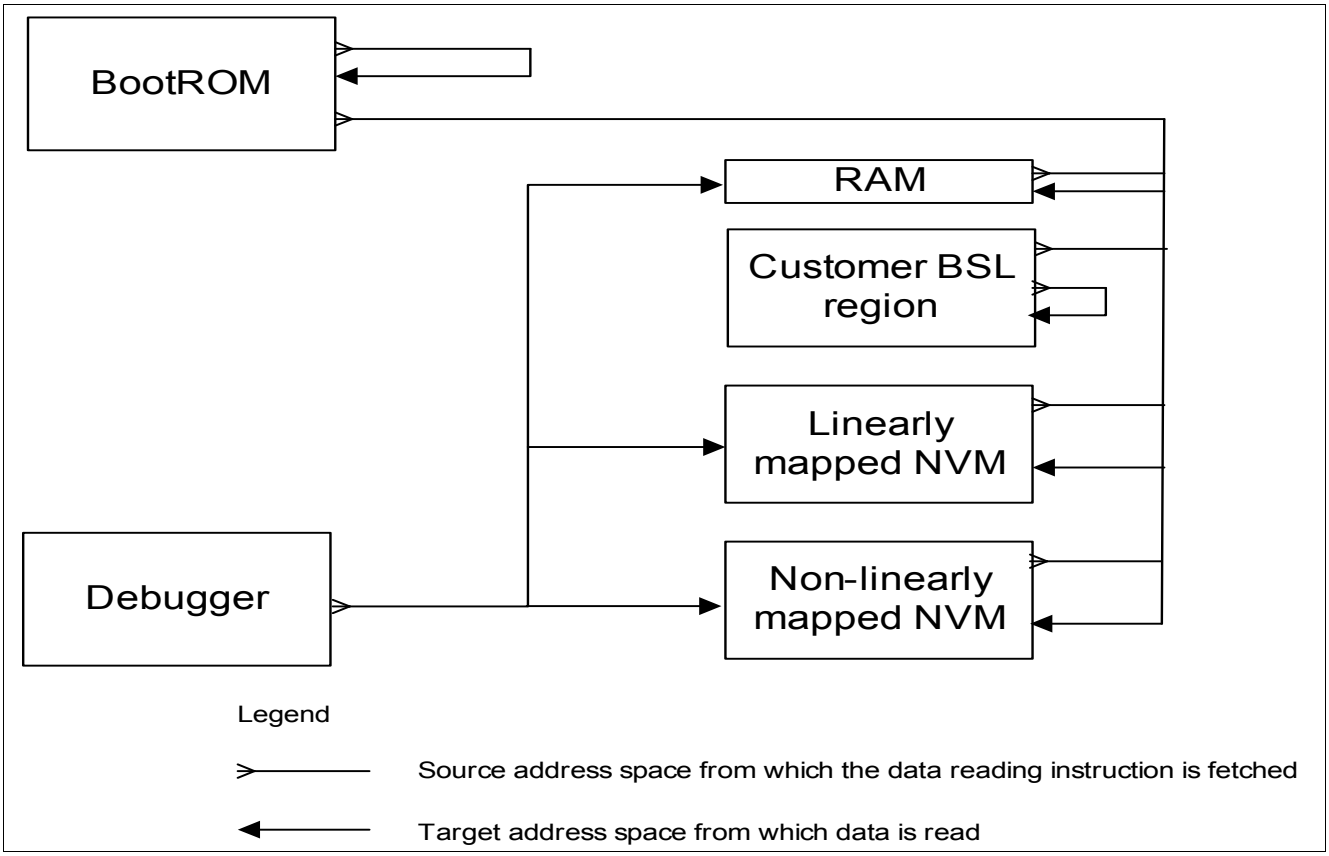

Figure 51 Customer BSL Region Protection Mode enabled

If the BootROM and the Customer BSL protection modes are enabled:

- Data reading instructions executed from the Linear NVM, Non-Linear NVM or RAM can target itself or one another
- Data reading instructions executed from the BootROM can target itself, Linear NVM, Non-Linear NVM or RAM
- Data reading instructions executed from the Customer BSL NVM region can target itself, Linear NVM, Non-Linear NVM or RAM

11.6.2.2.2 NVM Linear Protection Mode

The NVM Linear protection can be controlled via proper dedicated Password or via the NVMPROT_STS register as described in the **Chapter 11.6.2.2.4**.

When its write protection is enabled, any operation capable to change the NVM values stored in this region is blocked. For example, neither a program nor an erase can be executed.

Regarding write protection, the 100TP pages are considered to be part of the Linear NVM. For this reason, in case the write protection in this region is set, even the 100TP program is blocked.

In case the MPU and NVM control logic detect that the target address belongs to this region and that write protection is set, a proper alarm signal is forwarded to the NVM module to prevent the NVM state machine from accepting any program or erase command (including fast invalidation). This prevents inadvertent destruction of stored data while protection is set.

When NVM Linear read protection is enabled, the following accesses are restricted:

- Data reading instructions executed from any other memory region (BootROM, RAM, Customer BSL and Non-Linear NVM) targeting the NVM Linear region
- Data reading accesses triggered by debugger targeting the NVM Linear region

Figure 52 shows all the data reading instructions authorized when the BootROM, the Customer BSL region and NVM Linear read protections are enabled.

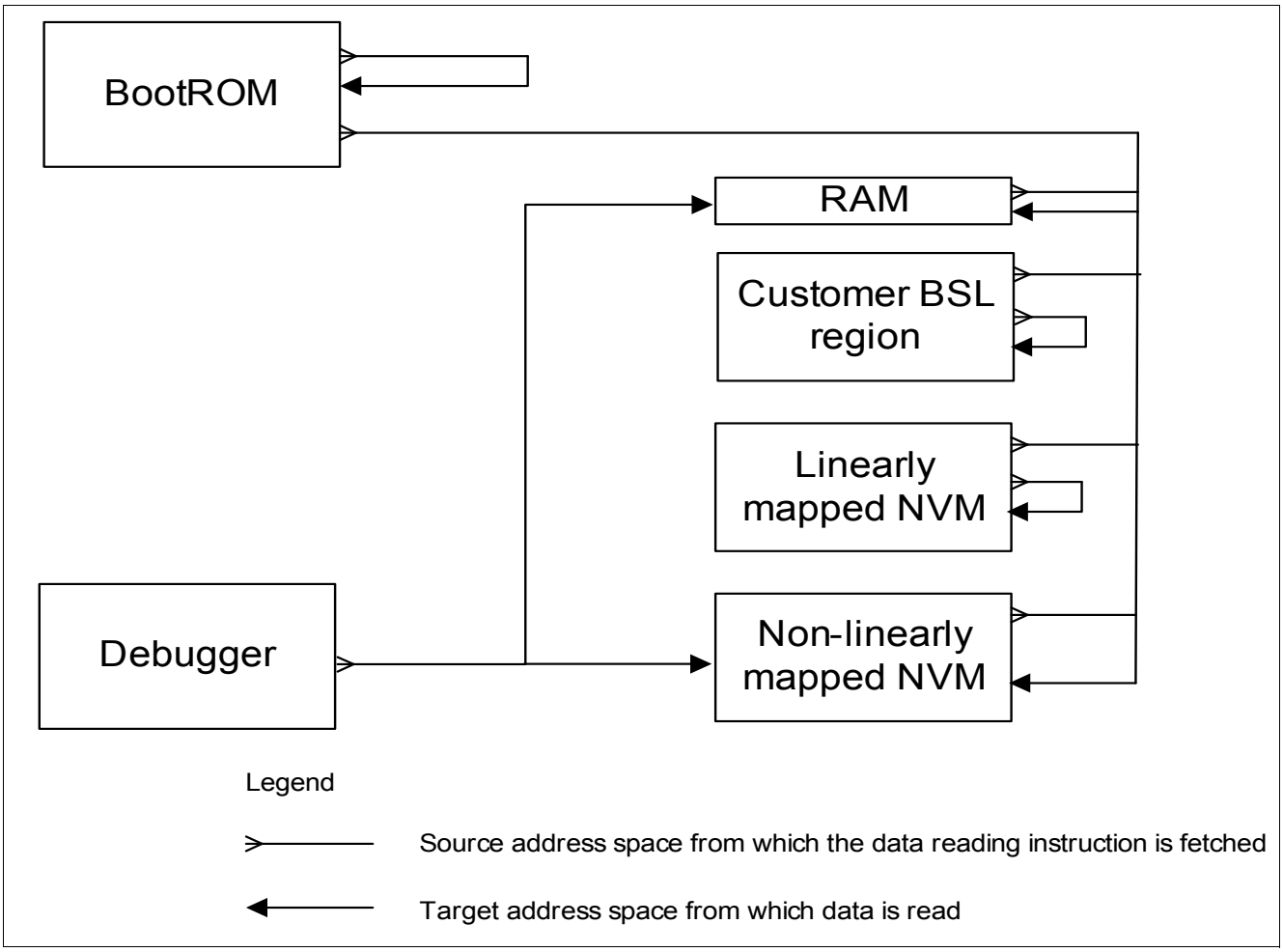

Figure 52 NVM Linear Protection Mode enabled

If the BootROM, the Customer BSL and the NVM Linear protection modes are enabled:

- Data reading instructions executed from the Non-Linear NVM or RAM can target itself or one another
- Data reading instructions executed from the BootROM can target itself, Non-Linear NVM or RAM
- Data reading instructions executed from the Customer BSL NVM region can target itself, Non-Linear NVM or RAM
- Data reading instructions executed from the NVM Linear region can target itself, Non-Linear NVM or RAM

11.6.2.2.3 NVM Non-Linear Protection Mode

The NVM Non-Linear protection can be controlled via proper dedicated Password or via the NVMPROT_STS register as described in the **Chapter 11.6.2.2.4**.

When its write protection is enabled, any operation capable to change the NVM values stored in this region is blocked. For example, neither a program nor an erase can be executed.

In case the MPU and NVM control logic detect that the target address belongs to this region and that write protection is set, a proper alarm signal is forwarded to the NVM module to prevent the NVM state machine from accepting any program or erase command (including fast invalidation). This prevents inadvertent destruction of stored data while protection is set.

When NVM Non-Linear read protection is enabled, the following accesses are restricted:

- Data reading instructions executed from BootROM, RAM and Non-Linear NVM targeting the NVM Non-Linear region
- Data reading accesses triggered by debugger targeting the NVM Non-Linear region

Figure 53 shows all the data reading instructions authorized when the BootROM, the Customer BSL region, NVM Linear and NVM Non-Linear read protections are enabled.

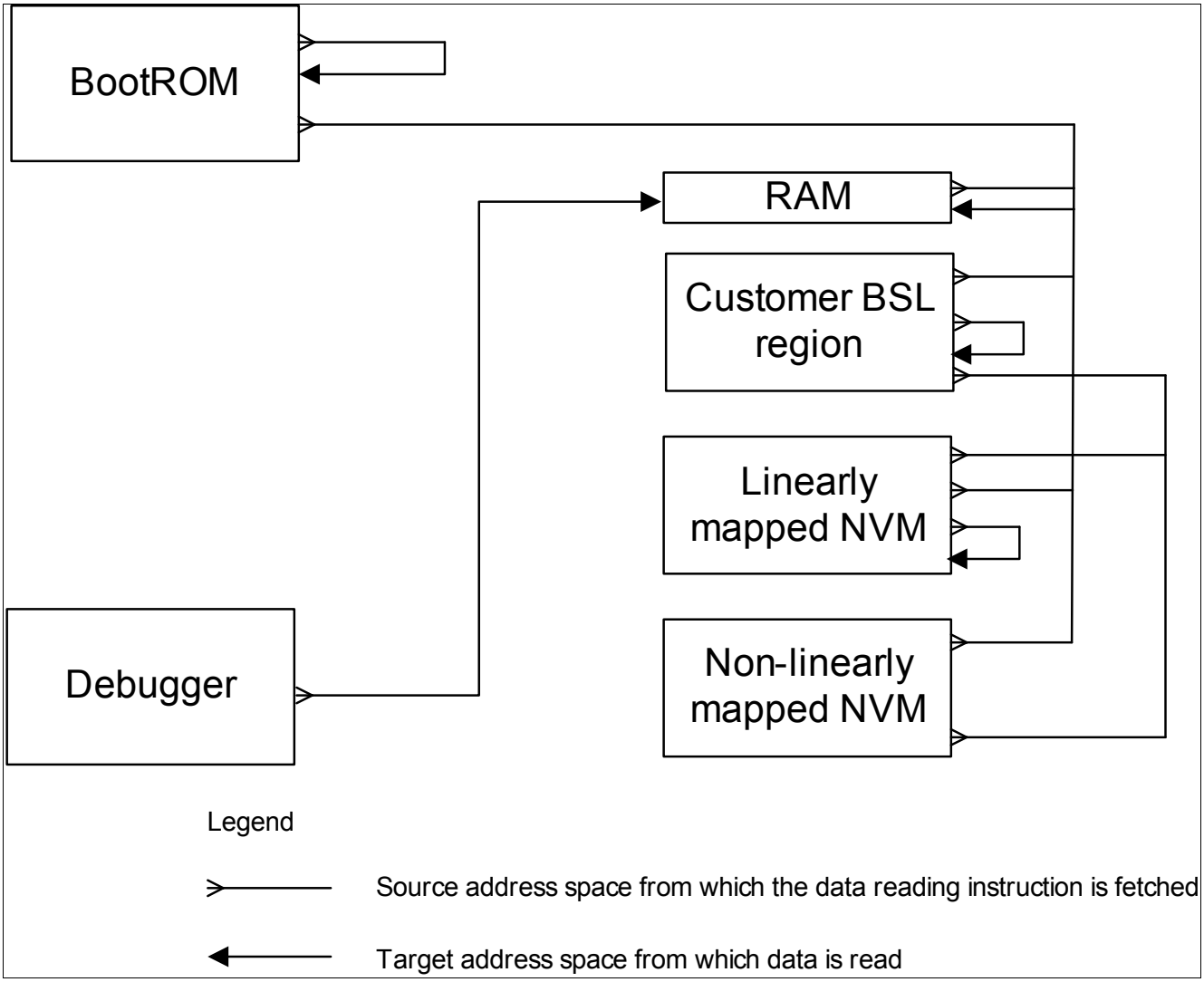

Figure 53 NVM Non-Linear Protection Mode enabled

If the BootROM, the Customer BSL, the NVM Linear and the NVM Non-Linear protection modes are enabled:

- Data reading instructions executed from the Non-Linear NVM can target the RAM
- Data reading instructions executed from the RAM can target itself
- Data reading instructions executed from the BootROM can target itself or RAM

- Data reading instructions executed from the Customer BSL NVM region can target itself, Non-Linear NVM or RAM
- Data reading instructions executed from the NVM Linear region can target itself, Non-Linear NVM or RAM

11.6.2.2.4 NVM Protection Mode Control

The read and write protection on the different regions are controlled via the register NVM_PROT_STS.

The value of this register can be changed in 2 different ways.

Memory region protection password

The first method is based on a region specific protection password. After the complete code has been programmed into the Customer BSL and Linear NVM regions, the protection scheme can be enabled by calling the BootROM password routine by means of the dedicated TLE984xQX BSL mode. The BootROM password routine programs a user provided password into the reserved space. Upon the next reset, the BootROM start-up routine will read out the stored user-defined password. If its value is valid (neither 00000000_H nor $FFFFFFFF_H$), the user password is taken as programmed and the protection on the specific region is set. The read and program protection modes are set writing the related bits of the NVM_PROT_STS register according to the information stored into the 2 most significant bits of the password. The format of the password is shown in the **Figure 54**.

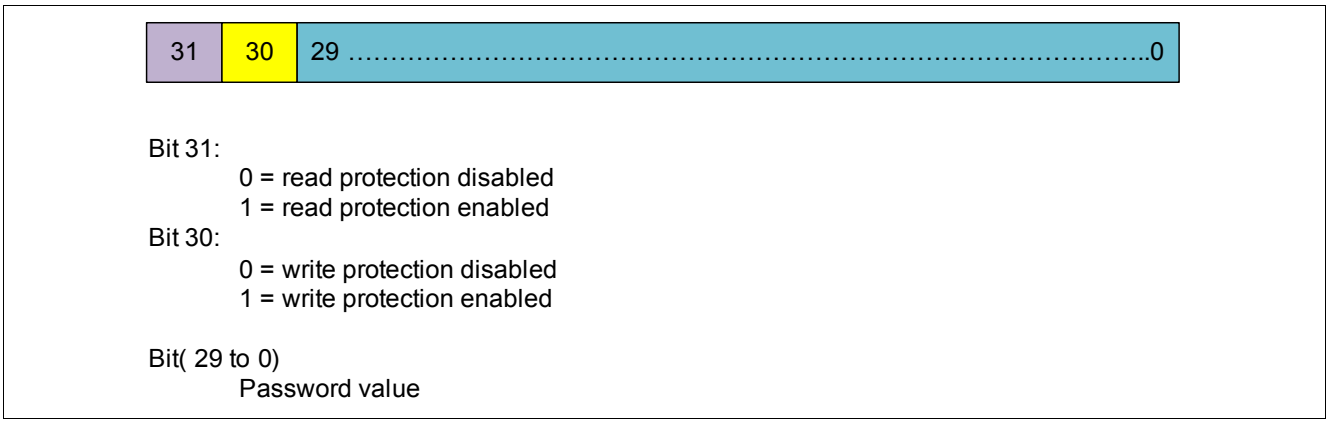

Figure 54 NVM Region Password Format

To allow external access to the device or to reprogram a new password, the same BootROM password routine accessible via BSL can be used, When no valid password have already been programmed, this routine can be used to store the customer defined password for a defined region. In case, instead, on a region a valid password is already programmed, the routine can be used to remove the password, The routine expects as an input the old password. In case the given password matches the one already stored, the password is removed without erasing the current code/data stored into that region. Consequently, at the following reset, the BootROM startup routine will find that no valid password is stored for this region and so will clear both read and write protection. Users are now allowed to freely access the region and at the end, in case of need, to re-use again the BootROM password routine via BSL to re-store a new password.

When removing the password via the BootROM password routine, in case the provided password does not match the valid password currently stored, all the data/code stored into the Customer BSL Linear NVM, Non-Linear NVM regions are erased to prevent hacking the password by repetitive trials.

There is a password for each region.

Memory region protection register access

The hardware memory protection mechanism is controlled by the values of the NVM_ PROT_STS register bits. When user set a protection via password, the BootROM startup sequence enables proper protection modes by writing the related bit of the NVM_PROT_STS register.

Even if user enables protection on a defined region at startup using the dedicated password, during the application code execution there might be the need to temporarily remove the protection to store some new code/data.

For example, user might want to set by default at startup the write protection on the Non-Linear NVM region to avoid accidental data loss. Nevertheless, during application code execution, there might be the need to update some of the data stored in this region. For this reason, the TLE984xQX provides the user the possibility to change the protection status writing directly the NVM_PROT_STS bits. The changes in the active protection scheme obtained via direct access to the register are anyhow temporary and the default protections controlled by password status will be automatically restored at the next reset (next BootROM startup sequence execution).

Anyhow, to safeguard against accidental access by user on this register, its access is controlled depending on boot mode, memory regions protections status and source address.

The bootROM code (firmware), provides proper APIs to individually set/clear, read and write protection on each memory protection region.

These routines:

- Freely change read/write protection as long as no valid password for the target region has been installed.
- In case a valid password for the target region is installed, the routine has to take the current valid password as input. If the provided password matches the current valid installed one, the target NVM_PROT_STS bits can be freely changed. In case, instead, the password provided as input does not match the current installed one, the NVM_PROT_STS target bits are not changed and the content of all the 3 password controlled memory region (Customer BSL, Linear NVM and Non-Linear NVM) together with the related passwords is erased to avoid hacking of the stored password by repetitive trials.

The above reported feature and routines applies in general for all the different memory protection regions. Exceptions:

- Customer BSL protection region is controllable only via password.

Note: The possibility to remove a protection even when password has been installed is provided to ensure to the user the possibility to unlock the device in case of FAR investigation. Of course, as reported above, all the provided mechanism require the knowledge of the current installed password. Without knowing the password value unlock is not possible.

11.6.3 Firmware Protection Mode

The firmware protection scheme is the second leg of the overall memory protection concept.

In particular, the BootROM code provides following features:

- Each BootROM routine provided by the firmware for the NVM data handling (e.g Program or Erase routines) checks the address to identify which region is targeted and accordingly check the relevant bit of the NVM_PROT_STS register. In case the write protection for the target region is not set, the operation is executed. In case, instead, the write protection for the target region is set, the routine is exited reporting a proper error.
- In case read protection is enabled on any of the password controllable protection regions (Customer BSL, Linear NVM and Non Linear NVM), all provided feature to download code into the device are blocked (for example all BSL modes available to download code into the device).

The firmware protection features are provided to complete the protection scheme. The first implemented feature is implemented to ease the detection of any BootROM routine fails due to the protection setting. In fact, in case a BootROM routine is called with write protection enabled, the routine would not affect the NVM content due to the

hardware protection scheme. In such a case, the BootROM based protection feature would recognize in firmware the protection settings and stop the routine providing a proper fail indication to the user code.

The second firmware based protection feature is instead needed to make the read protection mechanism provided by hardware effective. In fact, the feature for code download could be used for hacking even if the read protection is set on a region (but not the write protection). It would then be possible to read out the code/data by downloading a proper code into the same region. In fact, according to the hardware protection scheme, a code running from a selected region can always address itself. So, the Firmware will block all the boot options such that it is not possible to load and execute any external code, but only to execute user code starting at address pointed by the standard reset handler routine address stored at 11000004_H.

11.7 Core Protection Mode

The **Chapter 11.6.2** and **Chapter 11.6.3** describe the protection against accidental or malicious read and write memory access implemented in hardware and software. The hardware implements a check of all direct access to the each memory region (even from debugger) granting access only when the target region is not protected. The firmware, instead, blocks any download of new code via BSL in case any NVM read protection is installed to avoid the possibility to install any malicious software that removes the protection and reads out the user code.

Without any further feature, there would still be the possibility to use the debugger to leak information about user code. In fact, even if the read out of the memory content via debugger is blocked when accessing a read protected region, it is still possible to use the other debugger features (e.g. step through, breakpoints, watchpoints, code profiling) to perform a reverse engineering of executed code.

For this reason, a further level of protection is implemented between the Memory Control Unit and the Core.

In particular, the debugger features are disabled according to the current program counter and the installed passwords.

By default, when no password is installed, the debug features are disabled while executing from the BootROM thus avoiding any code profiling.

As soon as at least one read protection is set via one of the 3 NVM region password then the protected region is actually extended to the complete TLE984xQX code region. This means that any debugger command will be left pending thus resulting in a time out and a loss of connection. Consequently, once a password with most significant bit set to 1 is installed (read protection enabled), at the following reset no connection to the device is possible anymore.

12 NVM Module (Flash Memory)

The Flash memory provides an embedded user-programmable non-volatile memory, allowing fast and reliable storage of user code and data.

Features

- In-System Programming via LIN (Flash mode) and SWD
- Error Correction Code (ECC) for detection of single Bit and double Bit errors and dynamic correction of single Bit errors on Data Block (Double words, 64 bits).
- Interrupt and signaling of double bit error by NMI, address of double bit error readable by FW API user routine.
- Possibility of checking single bit error occurrence by ROM routines
- Program width of 128 Byte (page)
- Minimum erase width of 128 Byte (page)
- Integrated hardware support for EEPROM emulation
- 8 Byte read access
- Physical read access time: typ. 75 ns
- Code read access acceleration integrated; read buffer
- Page program time: typ. 3 ms
- Programming time for 64KB via Debug Interface: < 1800 ms (typ.)
- Page erase (128 bytes) and sector erase (4K bytes) time: typ. 4ms
- 3 separate keys for data area, program area and BSL area
- Password protection for three configurable program flash areas, three separate keys for data, program and BSL
- Security option to protect read out via debug interface in application run mode. NVM protection mode available, which can be enabled/disabled with password
- Write/erase access to 100TP (e.g. option bytes) is possible via the debug interface

Note: The user has to ensure that no flash operations which change the content of the flash get interrupted at any time.

The clock for the NVM is supplied with the system frequency f_{sys}. Integrated firmware routines are provided to ease NVM, and other operations including EEPROM emulation.

The TLE984xQX NVM module provides physical implementation of the memory module as well as needed complementary features and interface towards the core.

The module provides proper access to the memory through 2 AHB-Lite interfaces: a 8-bit data interface for NVM internal register access and a 32-bit data interface for code/data access both multiplexed on Cortex-M0 system bus.

The TLE984xQX NVM module consists of the memory cell array and all the control circuits and registers needed to access the array itself. The 64 Kbyte data module is mapped in the Cortex-M0 code address range 11000000H - 1100FFFFH while the dedicated SFRs are mapped in the Cortex-M0 system address range .

Access of NVM module is granted through the AMBA matrix block that forwards to the memory modules AHB-Lite interfaces the requests generated by the masters according to the defined priority policy.

12.1 Definitions

This section defines the nomenclature and some abbreviations. The used flash memory is a non-volatile memory (“NVM”) based on a floating gate one-transistor cell. It is called “non-volatile” because the memory content is kept when the memory power supply is shut off.

12.1.1 General Definitions

Logical and Physical States

Erasing

The erased state of a cell is ´1´. Forcing an NVM cell to this state is called erasing. Erasing is possible with a granularity of a page (see below).

Writing

The written state of a cell is ´0´. Forcing an NVM cell to this state is called writing. Each bit can be individually written.

Programming

The combination of erasing and writing is called ‘programming’. Programming often means also writing a previously erased page.

The wording ‘write’ or ‘writing’ are also used for accessing special function registers and the assembly buffer. The meaning depends therefore on the context.

The above listed processes have certain limitations:

Retention: This is the time during which the data of a flash cell can be read reliably. The retention time is a statistical figure that depends on the operating conditions of the flash array (temperature profile) and the accesses to the flash array. With an increasing number of program/erase cycles (see endurance) the retention is lowered. Drain and gate disturbs decrease data retention as well.

Endurance: As described above, the data retention is reduced with an increasing number of program/erase cycles. A flash cell incurs one cycle whenever its page or sector is erased. This number is called “endurance”. As said for the retention, it is a statistical figure that depend on operating conditions and the use of the flash cells and on the required quality level.

Drain Disturb: Because of using a so called “one-transistor” flash cell each program access disturbs all pages of the same sector slightly. Over long these “drain disturbs” make 0 and 1 values indistinguishable and thus provoke read errors. This effect is again interrelated with the retention. A cell that incurred a high number of drain disturbs will have a lower retention. The physical sectors of the flash array are isolated from each other. So pages of a different sector do not incur a drain disturb. this effect must be therefore considered when the page erase feature is used or when re-programming an ready programmed page (implicitly causing an erase of the page before writing the new data).

Data Portions

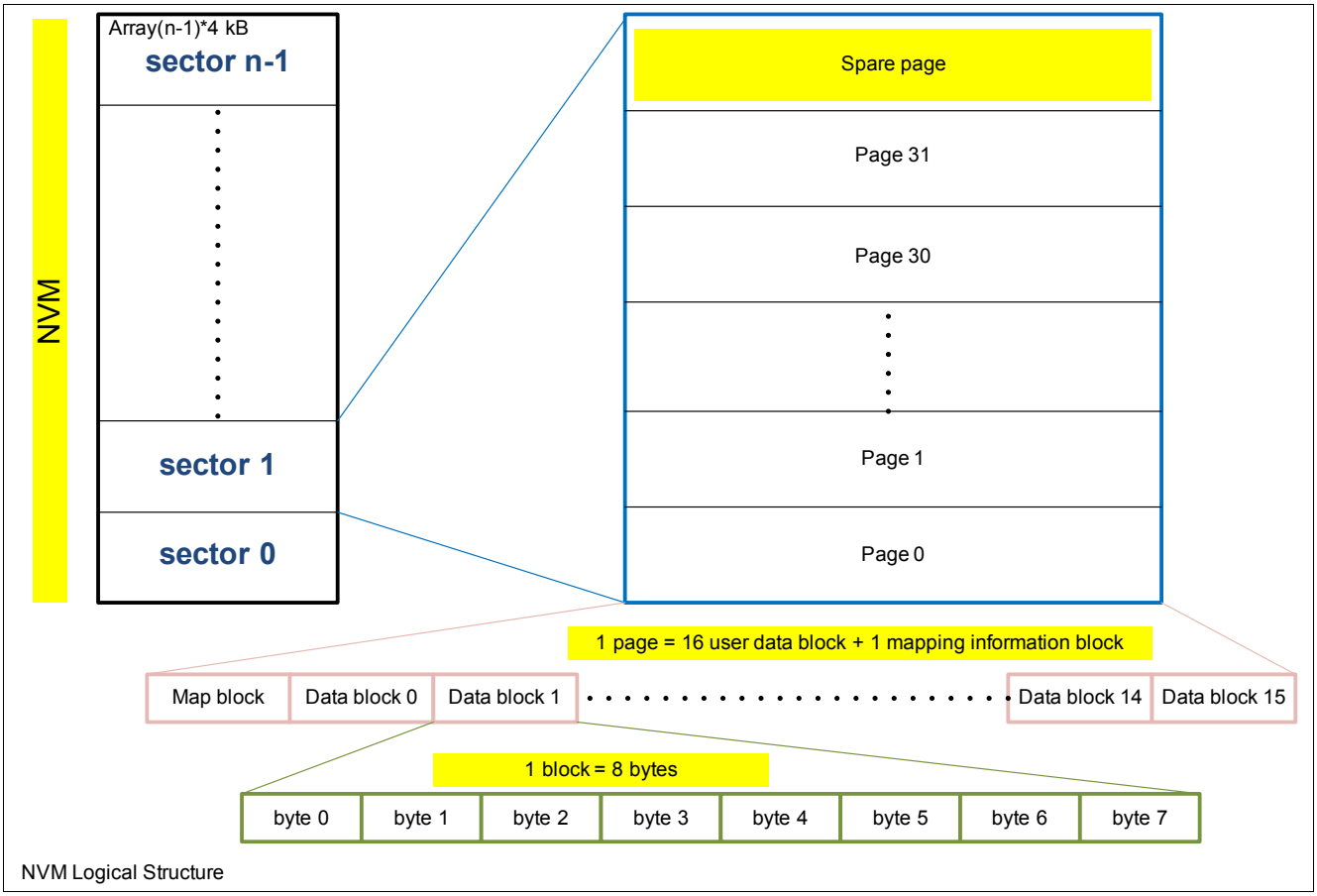

Figure 55 Logical Structure of the NVM Core

Doubleword

A doubleword consists of 64 bits. A doubleword represents the data size that is read from or written to the NVM core module within one access cycle.

Block

A block consists of one doubleword and its associated ECC data (64 bit data and 8 bit ECC). A block represents the smallest data portion that can be changed in the assembly buffer. Since the ECC protects 64 bits, when a byte is written to the assembly buffer automatically an NVM internal read of the complete block is triggered, the byte and the ECC are updated and the complete block is written back to the assembly buffer.

Mapblock

A map block consists of a module specific number of ECC -protected bits that hold the necessary information to map a physical page to a logical page.

Page

A page consists of 16 blocks and one map block.

Spare Page

A spare page is an additional page in a sector used in each programming routine to allow tearing-safe programming.

Sector

A sector consists of 32 logical and 33 physical pages.

12.2 Functional Description

The main tasks of the NVM module are reading form the memory array, writing to the assembly buffer, enabling (tearing safe) programming of a single page, provide basic in-module functionality for code protection. The main features are listed following:

- 64 KB memory size
- 3 ms write time per page
- 4 ms erase time per page
- Error correction and Error Detection code (ECC and EDC)
- In module memory protection logic

12.2.1 Basic Block Functions

Description of all major/significant blocks with sub-block diagrams.

Diagram showing the product´s internal functional composition.

Figure 56 shows a schematic block diagram of the NVM module

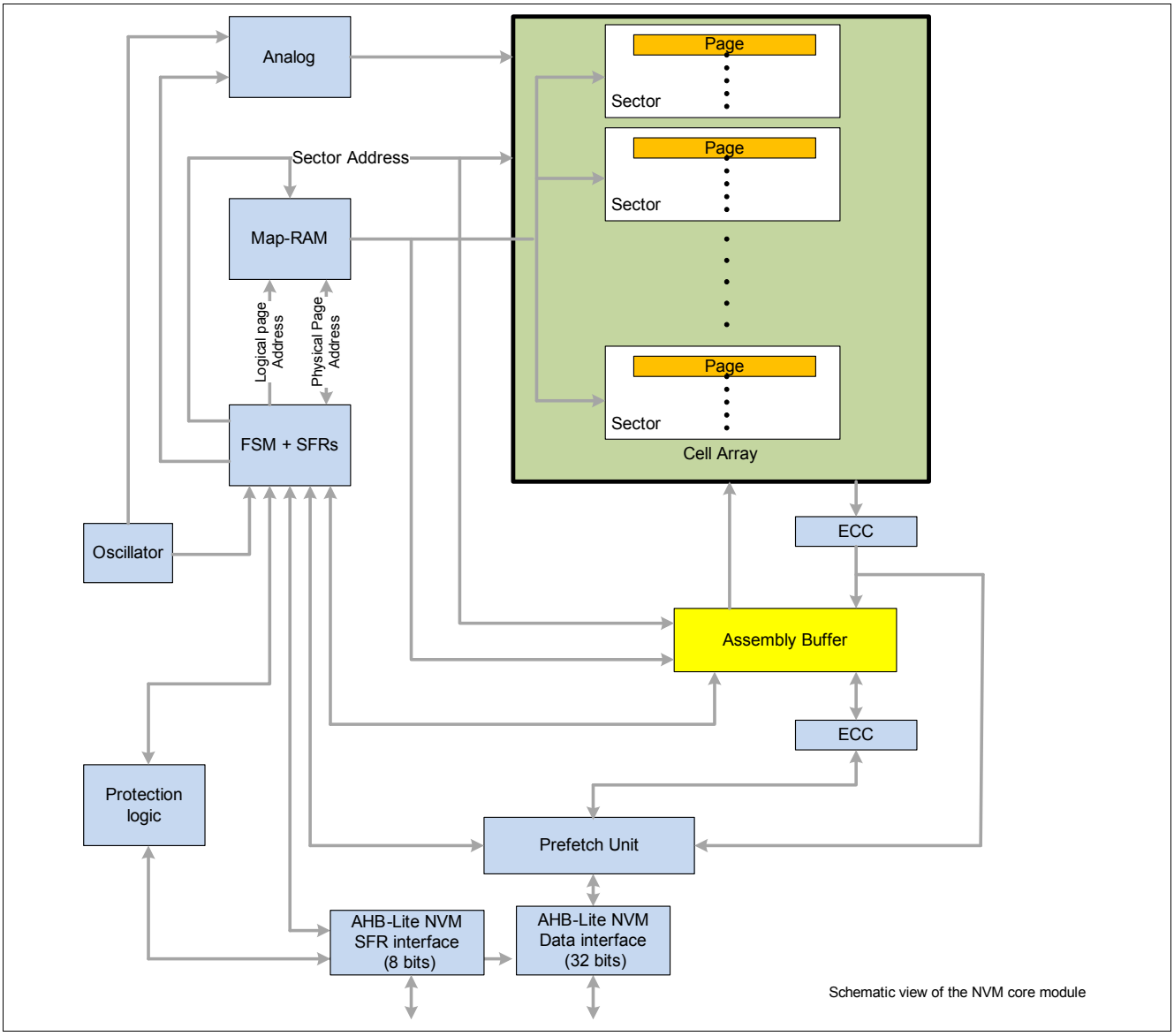

Figure 56 Schematic View of the NVM Core Module

12.2.2 Memory Cell Array

The non-volatile memory cells are organized in sectors, which consists of pages, which are structured in blocks and map block.

Page

Each page consists of 16 data blocks of 64 bits each and one map block. The map block stores the mapping information of the page in the sector. All blocks of a page are ECC-protected.

A page is the smallest granularity of data that can be changed (erased or written) within the cell array. One data block is the minimum granularity of data that can be read from the NVM module within memory read access.

Employing the integrated EEPROM emulation using the map RAM, the minimum granularity of data that can be changed in the NVM is one byte, while all other bytes in the page do not change.

Assembly Buffer

The assembly buffer is a RAM that can hold the content of one page including the mapblocK.

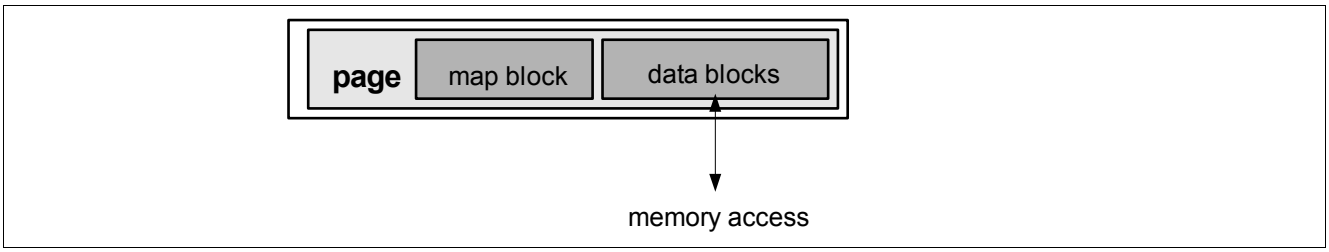

Figure 57 Structure of assembly buffer

Sector

A sector consists of 33 physical pages. 32 pages can be logically addressed during a memory access. One page is internally used as a spare page.

Map RAM

The map RAM is a static RAM that holds the mapping of a logical page addresses to physical page addresses for each mapped sector. It is completely handled by the NVM programming related BootROM routines.

FSM and SFR block

This block contains the special function registers (SFRs) of the NVM module.Beside memory reads and writes to the assembly all interactions of the BootROM software with the module take places through register accesses. The finite state machine (FSM) controls the actions (e.g. read, erase and write) of the NVM module.

Analog components

The module contains analog components to provide all the voltages necessary for erasing, writing and reading the non-volatile memory cells.

12.2.3 SFR Accesses

All SFRs can only be accessed through the NVM related BootROM routines, that is, the customer software cannot access the SFRs directly but has to use BootROM routines.

12.2.4 Memory Read

The NVM memory internally can be read with a minimum granularity of one block (64 data bits).

If the block is not within the memory address range of the NVM module, the module does not react at all and a different memory module may handle the access.

If the page accessed during a read is not mapped, an NVM_TRAP is triggered but no hardfault shall be generated, i.e. HRESP stays at 0 (e.g. when accessing an erased data sector).

Memory read accesses are only possible while no FSM procedures (program, init, sleep or copy) is in progress. A memory read access while the FSM is busy is stalled as long as the FSM is busy and the access is carried out when the FSM is in idle mode again.

Since a read to the memory field takes a fixed time mostly independent of the system frequency, an optimized number of waitstates (3, 1 or, 0) is generated for different system frequencies selected by SYSCON0.NVMCLKFAC.

Furthermore, a module internal read buffer holds the block read last. An access to an address within this block does not trigger a new reading from the memory field but is directly served from the read buffer. For execution of linear code three out of four 16-bit instructions or one out od two 32-bit instructions accesses are served without any waitstates.

12.2.5 Memory Write

Data is not written to the memory array directly, but to the assembly buffer and then copied into the cell array by the write sequence.

Memory writes are handled through the BootROM software, which at first copies the existing content of a page to the assembly buffer, allows the user to modify the content of the assembly buffer and afterwards executes the programming of the data to the memory field followed by a verification step.

12.2.6 Timing

The target timing of the hardware sequences excluding the software overhead is shown below:

- Erase: 4.0 ms per page
- Write: 3.0 ms per page
- Program (= Erase+ Write): 7.0 ms per page

The disturb handling routine when enabled with a probability of a approximately 0.4% adds additional 7.0 ms to a page write or program operation.

12.2.7 Verify

The data programmed by the BootROM function is verified by the BootROM routine itself. The programmed data in the cell array is compared with the data still available in the assembly buffer. This is done using suitable hard-read levels. These hard-read levels provide a margin compared to the normal read level to ensure that the data is actually programmed with suitably distinct levels for written and erased bits.

12.2.8 Tearing-Safe Programming

The mapping mechanism of the NVM module is used like a log-structured file system: When a page is programmed in the sector the old values are not physically overwritten, but a different physical page (spare page) is programmed in the same sector in fact. If the programming fails (e.g. because of power loss during the erase or write procedure), the old values are still present in the sector. The BootROM routines therefore can program a single page in a tearing-safe way.

When an erase or write procedure to the memory field was interrupted by a power-down, this is identified during the reconstruction of the map-RAM content after the next reset. In this case, a special routine in the BootROM (called Service Algorithm) is automatically started, identifies this tearing case of respective logical page and repairs the NVM state, ensuring that either the old or the new data (or both) are fully valid.

12.2.9 Dynamic Address Scrambling

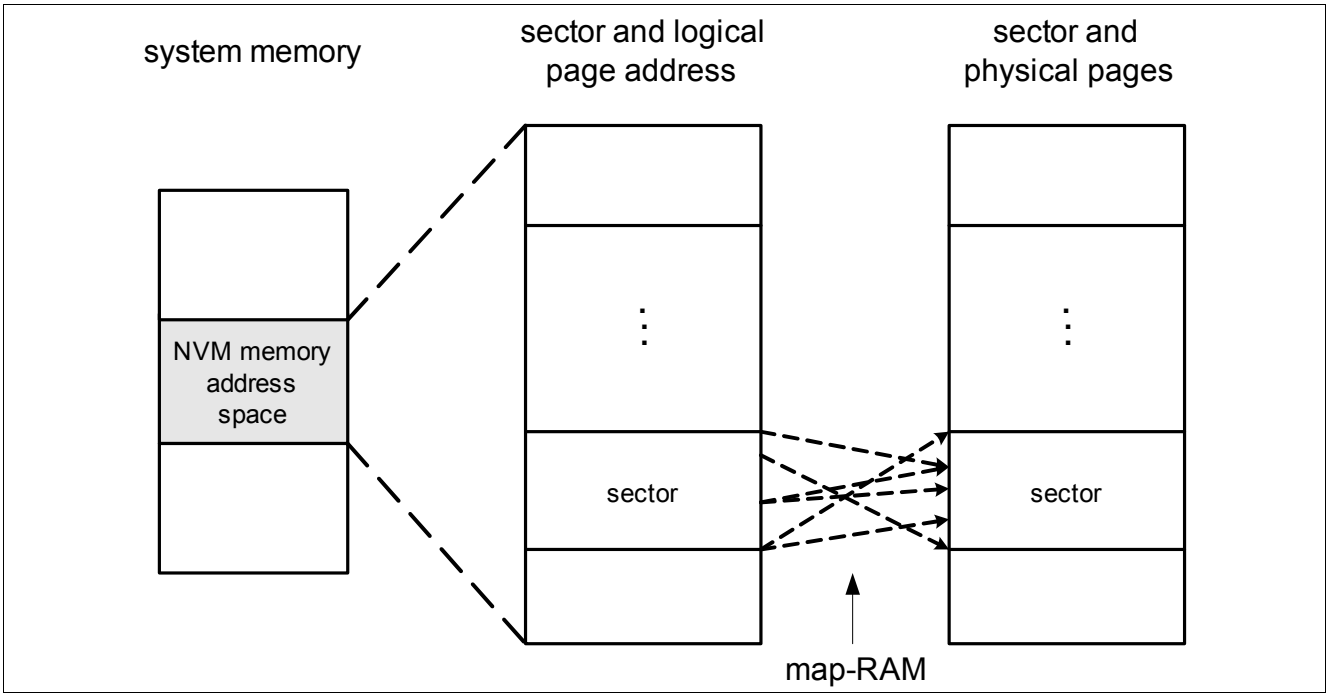

Figure 58 Dynamic address scrambling through map-RAM

Starting from the system address space of the NVM, the NVM module supports mapping of pages within each sector. As described above, this is useful for tearing-safe programming, but it also provides a dynamic address scrambling: After programming a page the new information is physically stored in a different page in the same sector. The logical page address and therefore the physical memory address stays the same. For this reason the mapping is fully transparent for the customer software.

12.2.10 Linearly Mapped Sectors

A number of sectors can be configured not to use the map-RAM mapping mechanism, i.e. for these sectors logical and physical page addresses are identical. The range of these linearly mapped sectors always starts at the lowest NVM address of the NVM module, extending upwards to higher addresses. For these sectors (intended to mainly store executable code without the need for tearing-save programming) no reconstruction of the map-RAM content after reset is necessary, which saves time during the sleep-wake-up and power-up of the chip.

For memories with more than 16 sectors (the maximum number of sectors currently supported by the map-RAM), the remaining lower sectors are always linearly mapped.

12.2.11 Disturb Handling

Due to the implementation of the cell array, while writing a page into the cell array all other pages within the same sector are slightly written (disturbed) too. If some pages of a sector are changed often and other pages of the same sector only rarely, these rarely programmed pages may be disturbed too often and loose their data.

If the disturbs for a page exceed a specific value (this happens only when a different page in the same sector is programmed), the page has to be reprogrammed (refreshed). A dedicate option of the programming routines provided with the BootROM make sure that the pages are refreshed in time.

As mentioned, the refreshing of a page - when actually triggered - will double the overall programming time.

12.2.12 Hot Spot Distribution

In the used UCP EEPROM technology always a whole page has to be programmed when any part of it (e.g. only a byte or doubleword) is modified. This means that cycling multiple parts of one page separately physically means cycling of the whole page every time one part is programmed.

In the following one such part (e.g. byte or doubleword) will be called a “hot spot”.

For H hot spots in a page where each hot spot is separately cycled c times, this results in a cycle stress of the page of c*H.

As the EEPROM programming is always performed by copying the modified currently mapped page to the spare page, the cycle stress is shared among two pages. Furthermore, as after some time the disturb handling described in **Chapter 12.2.11** kicks in, the cycling stress eventually is shared among all 33 pages of the sector.

Therefore, the average cycle stress for a physical page in a sector is c*H/33, when H hot spots in a logical page are separately cycled c times.

On the other hand, this means that with a cycle endurance of E for a page, the number of cycles which can be performed before a page can become damaged by cycle stress can be calculated as c = 33*E/H per hot spot in the sector.

Depending on the number of hot spots in a sector the maximum allowed number of cycles c per hot spot can become unacceptably low.

If the hot spots are concentrated in one sector and other sectors have only a low number of hot spots, a hot spot distribution over several sectors is advisable. This hot spot distribution is not supported in HW but has to be done during the implementation of the software.

12.2.13 Properties of Error Correcting Code (ECC)

The error correcting code (ECC) for the data blocks implements a one-bit error correction and a double-bit error detection for every data block of 64 bits. The correct ECC bits for every block are generated automatically when the assembly buffer is written. During every read the ECC bits are read together with the data bits. The validity of the code word is checked by hardware. Every single bit error is corrected automatically.

The described ECC mechanism results in the limitation that a block of 64 bits is the smallest data unit that can be read internally, since always a complete block has to be read to check for possible ECC errors and writing a byte automatically triggers a read of the complete block.

A data block with all bits fully erased is ECC-correct.

When a page is copied to the assembly buffer, the ECC correction of data blocks with a one-bit error is done automatically, whereas data with an uncorrectable error is passed on unchanged. No ECC interrupt is generated for ECC errors that are detected during the copying of a page to the assembly buffer.

12.2.14 Resume from disturbed Program/Erase operation

If a NVM operation like Program or Erase was interrupted by any means, then a data integrity check of the data flash is required. The data integrity check can be done by performing a cold reset, power-up reset, pin reset, WDT1 reset or exit from SleepMode. All these resets are running through the MapRAM Initialization of the BootROM, which executes the Service Algorithm in case a data integrity issue inside the data flash was detected. The Service Algorithm tries to resolve a data integrity issue by erasing erroneous data flash pages in order to maintain an proper data flash mapping. The return value of the Service Algorithm is provided inside the register MEMSTAT to the user application. The user application has to evaluate the **SCU_MEMTEST** register in order to perform appropriate corrective actions if needed. Furthermore the register **SCU_SYS_STRTUP_STS** provides status information about the MapRAM Initialization function executed during start-up. It allows the user directly to jugde the data integrity of the data flash. In case the **SCU_SYS_STRTUP_STS** register reports a MapRAM Initialization fail it is not recommended to perform any further write operation to the data flash, as this migh result in unrecoverable loss of data integrity inside the data flash. A reinitialization of the data flash by performing a

SECTOR_ERASE will then be the only solution. Instead a reset of the device might be triggered in order to execute the Service Algorithm. If even the Service Algorithm fails to resolve the data integrity issue then the data flash sector has to be reinitialized. In order to provide full reliability of the data flash module and to avoid any loss of data integrity inside the data flash the user has to ensure that no NVM operation which changes the content of the data flash module, program or erase, get interrupted at any time. Appropriate actions to support this could be:

- the capacitor at the VS input has to be dimensioned large enough to provide enough charge to the device to keep the VS supply in the specified range until the NVM operation ended normally
- check the supply voltage to be high enough and stable before a NVM operation gets started in order to end the NVM operation normally without interruption
- disable interrupts in the system before a NVM operation gets started, reenable the interrupts upon return
- avoid nested NVM operations
- trigger the WDT1 in short-open-window mode for any NVM operation
- evaluate the return values of the NVM operations and perform corrective actions accordingly
- check the data integrity of the data flash by executing the USER_MAPRAM_INIT function and perform corrective actions accordingly

Note: The above mentioned recommendation do also apply to NVM write/erase operations to the code flash and as well as to the 100TP pages.

12.2.15 Code and Data Access through the AHB-Lite Interface

The system provides access to the data stored in the NVM cell array through an AHB Lite interface. Whenever the core needs to fetch instructions or read data form or write data into the NVM module, a proper AHB Lite compliant access request is forwarded by the bus matrix block into the module.

13 Interrupt System

13.1 Features

- Up to 24 interrupt nodes for on-chip peripherals
- Up to 8 NMI nodes for critical system events
- Maximum flexibility for all 24 interrupt nodes

13.2 Introduction

13.2.1 Overview

The TLE984xQX supports 24 interrupt vectors with 4 priority levels. 22 of these interrupt vectors are assigned to the on-chip peripherals: GPT12, SSC1, SSC2, CCU6, Low-Side Switch, High-Side Switch and A/D Converter are each assigned to one dedicated interrupt vector; while UART1 and Timer2 or UART2, External Interrupt 2 and Timer21 share interrupt vectors. Two vectors are dedicated for External Interrupt 0 and 1.

A non-maskable interrupt (NMI) with the highest priority is shared by the following:

- Watchdog Timer, warning before overflow
- MI_CLK Watchdog Timer overflow event
- PLL, loss of lock
- Flash, on operation complete e.g. erase.
- OT prewarning
- Oscillator watchdog detection for too low oscillation of f_{OSC}
- Flash map error
- Uncorrectable ECC error on Flash and RAM
- VSUP supply prewarning when any supply voltage drops below or exceeds any threshold.
- Overtemperature prewarning when system temperature exceeds a certain limit.

Figure 1, **Figure 62**, **Figure 5**, **Figure 6** and **Figure 64** give a general overview of the interrupt sources and nodes, and their corresponding control and status flags. **Figure 72** gives the corresponding overview for the NMI sources. The table below shows the available interrupt vectors.

Table 165 Interrupt Vector Table

Service Request	Node ID	Description
GPT1	0	GPT1 Interrupt
GPT2	1	GPT2 Interrupt
MU	2	MU interrupt / ADC2, VBG interrupt
ADC1	3	ADC10 Bit interrupt
CCU0	4	CCU6 node 0 interrupt
CCU1	5	CCU6 node 1 interrupt
CCU2	6	CCU6 node 2 interrupt
CCU3	7	CCU6 node 3 interrupt
SSC1	8	SSC1 interrupt (receive, transmit, error)
SSC2	9	SSC2 interrupt (receive, transmit, error)

Table 165 Interrupt Vector Table (cont'd)

Service Request	Node ID	Description
UART1	10	UART1 (ASC-LIN) interrupt (receive, transmit), t2, linsync1, LIN
UART2	11	UART2 interrupt (receive, transmit), t21, External interrupt (EINT2)
EXINT0	12	External interrupt (EINT0), wakeup
EXINT1	13	External interrupt (EINT1)
WAKEUP	14	Wakeup interupt (generated by a wakeup event)
rfu	15	Reserved for future use
rfu	16	Reserved for future use
LS1	17	Low Side 1 Interrupt
LS2	18	Low Side 2 Interrupt
HS1	19	High Side 1 Interrupt
HS2	20	High Side 2 Interrupt
DU	21	Differential Unit - DPP1 (product variant dependant, only TLE9845QX)
MONx	22	MONx Interrupt, wakeup
Port 2.x	23	Port 2.x - DPP1

Table 166 NMI Interrupt Table

Service Request	Node	Description
PLL NMI	NMI	PLL Loss-of-Lock
NVM Operation Complete NMI	NMI	NVM Operation Complete
Overtemperature NMI	NMI	System Overtemperature
Oscillator Watchdog NMI	NMI	Oscillator Watchdog and MI_CLK Watchdog Timer Overflow
NVM Map Error NMI	NMI	NVM Map Error
ECC Error NMI	NMI	RAM / NVM Uncorrectable ECC Error
Supply Prewarning NMI	NMI	Supply Prewarning

13.3 Functional Description

13.3.1 Interrupt Node Assignment

13.3.1.1 Interrupt Node 0 and 1 - GPT12 Timer Module

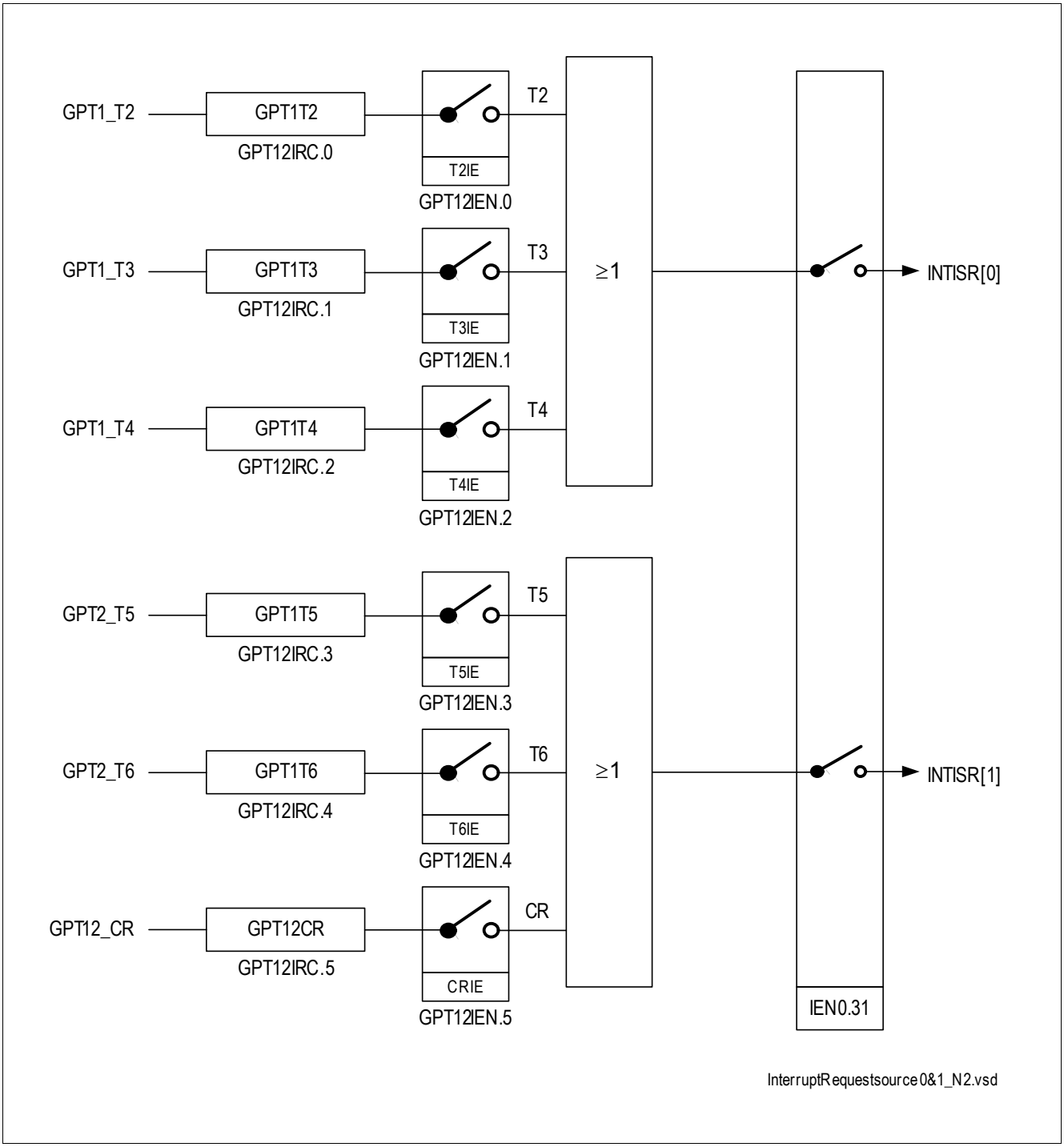

Figure 59 Interrupt Request Sources 0 and 1 (GPT12)

13.3.1.2 Interrupt Node 2 - Measurement Unit

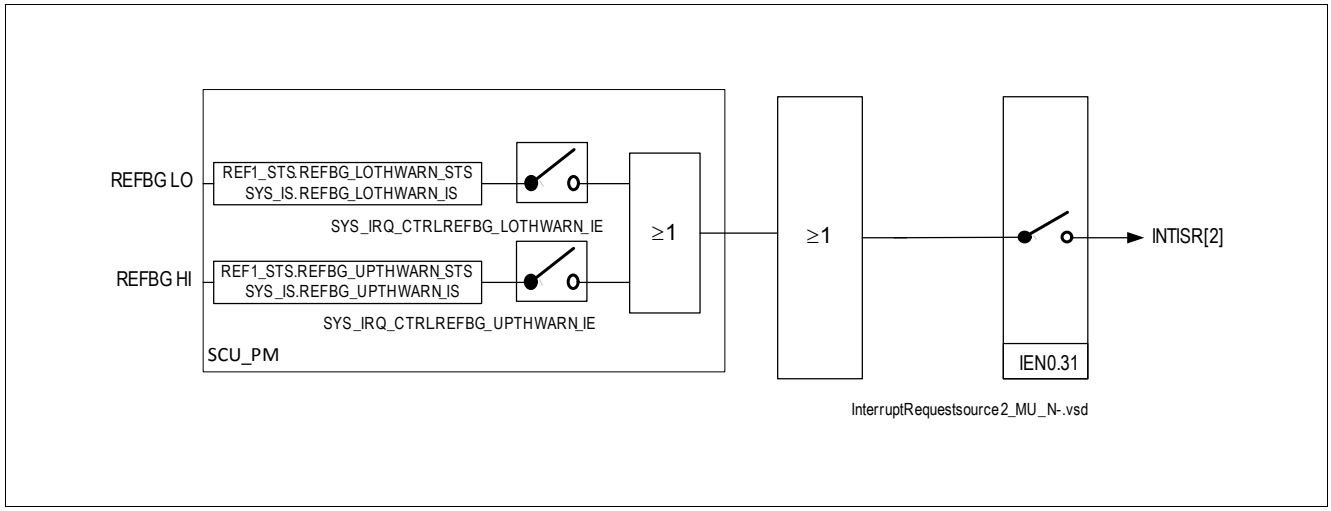

Figure 60 Interrupt Request Sources 2 (MU)

13.3.1.3 Interrupt Node 3 - ADC10

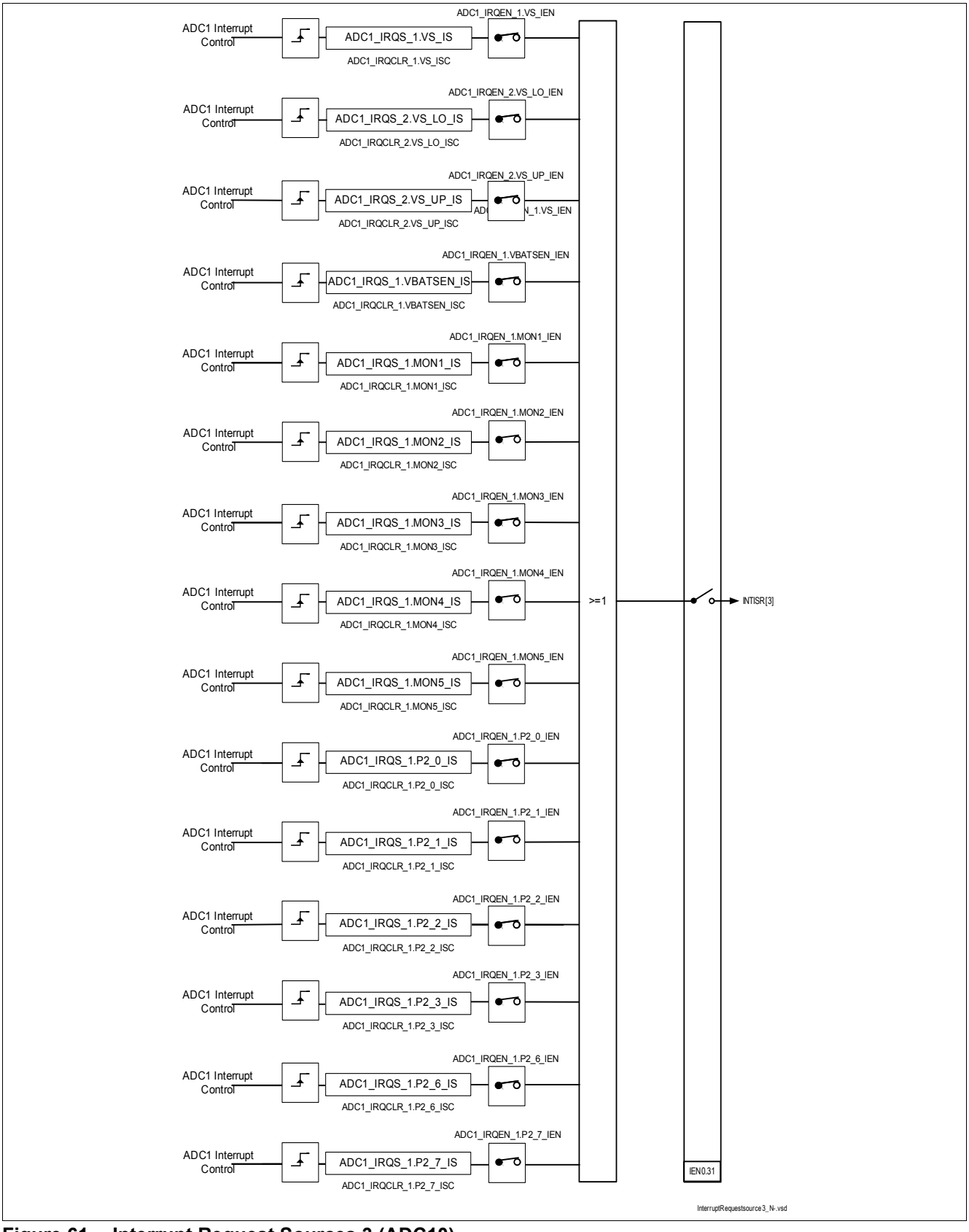

Figure 61 Interrupt Request Sources 3 (ADC10)

13.3.1.4 Interrupt Node 4, 5, 6, 7 - CCU6

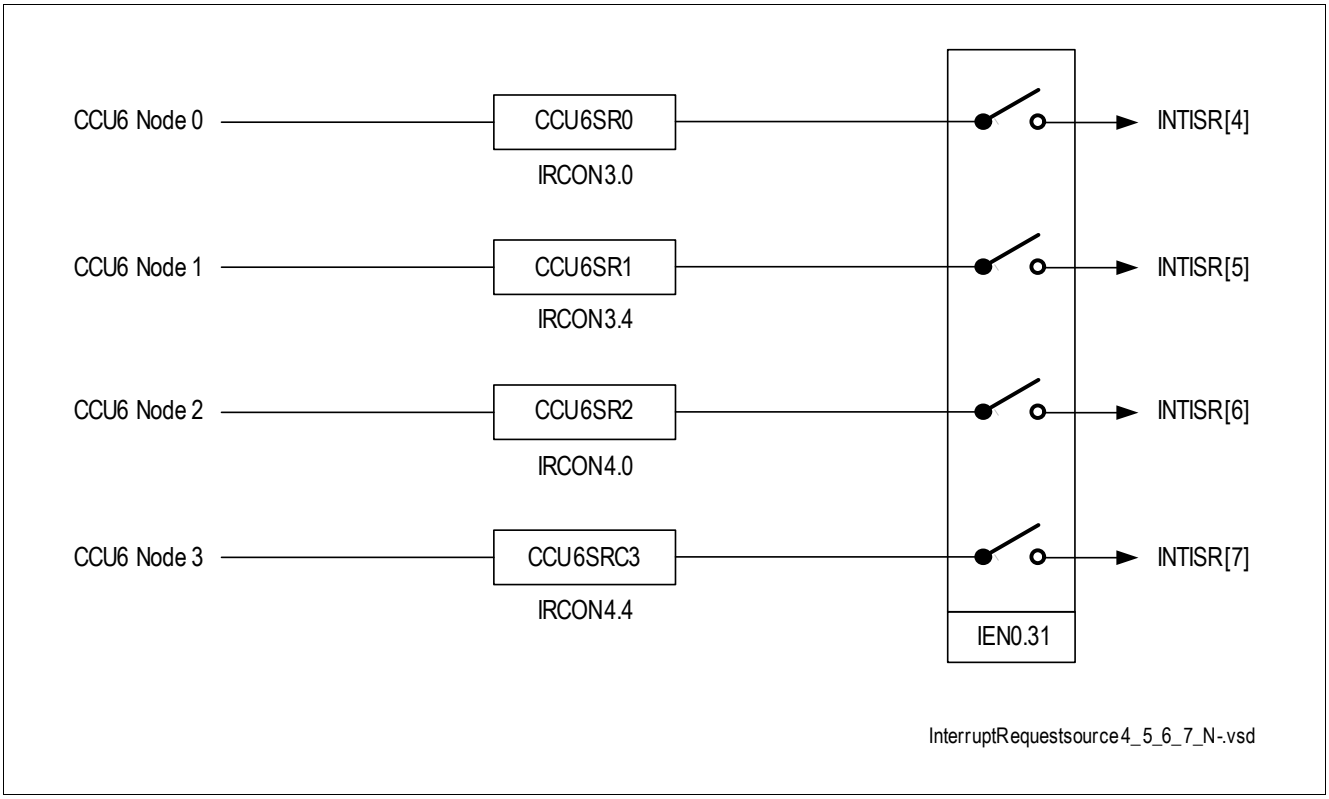

Figure 62 Interrupt Request Sources 4, 5, 6, 7 (CCU6)

13.3.1.5 Interrupt Node 8 and 9 - SSC

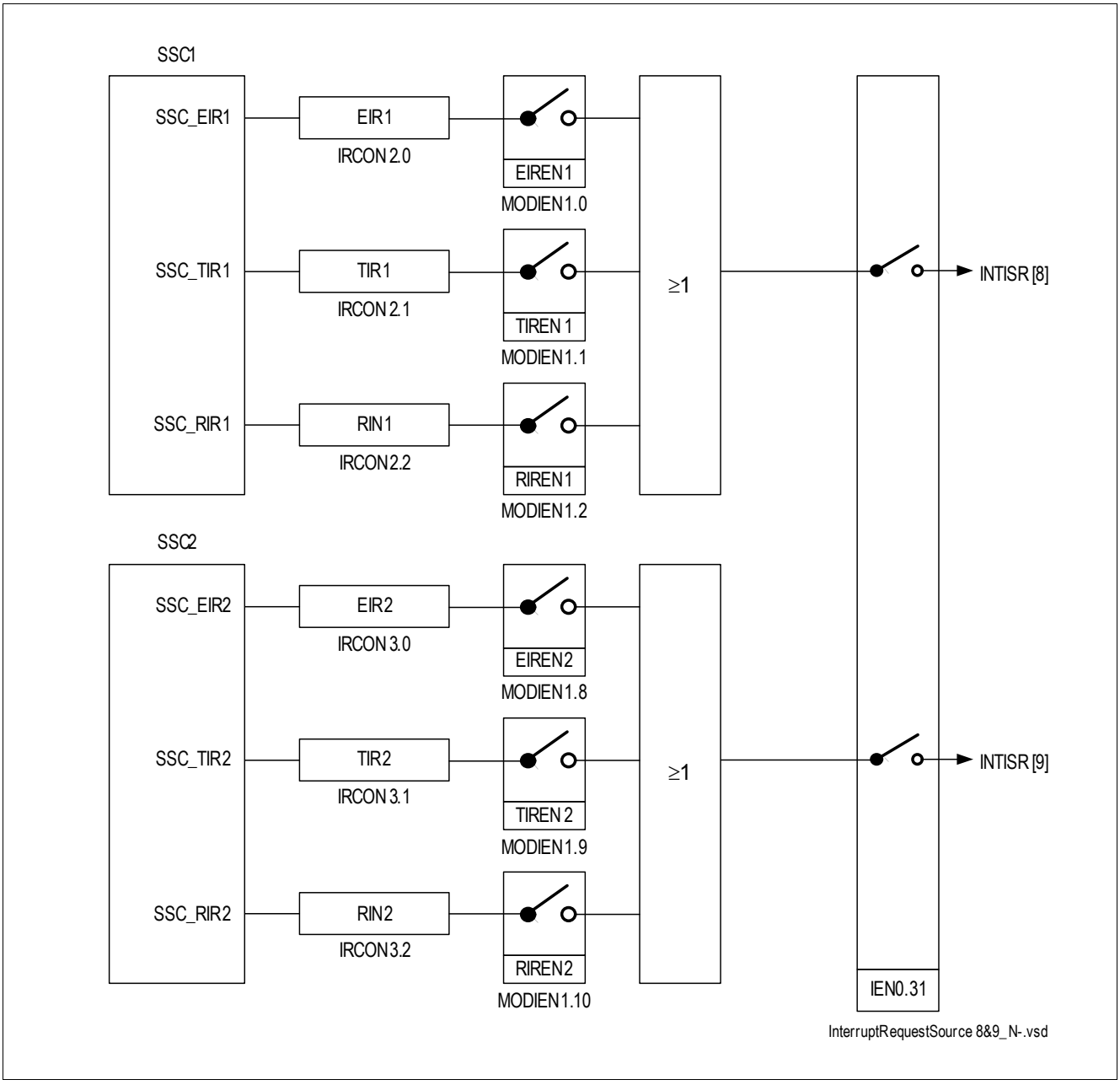

Figure 63 Interrupt Request Sources 8 and 9 (SSC)

13.3.1.6 Interrupt Node 10 - UART1

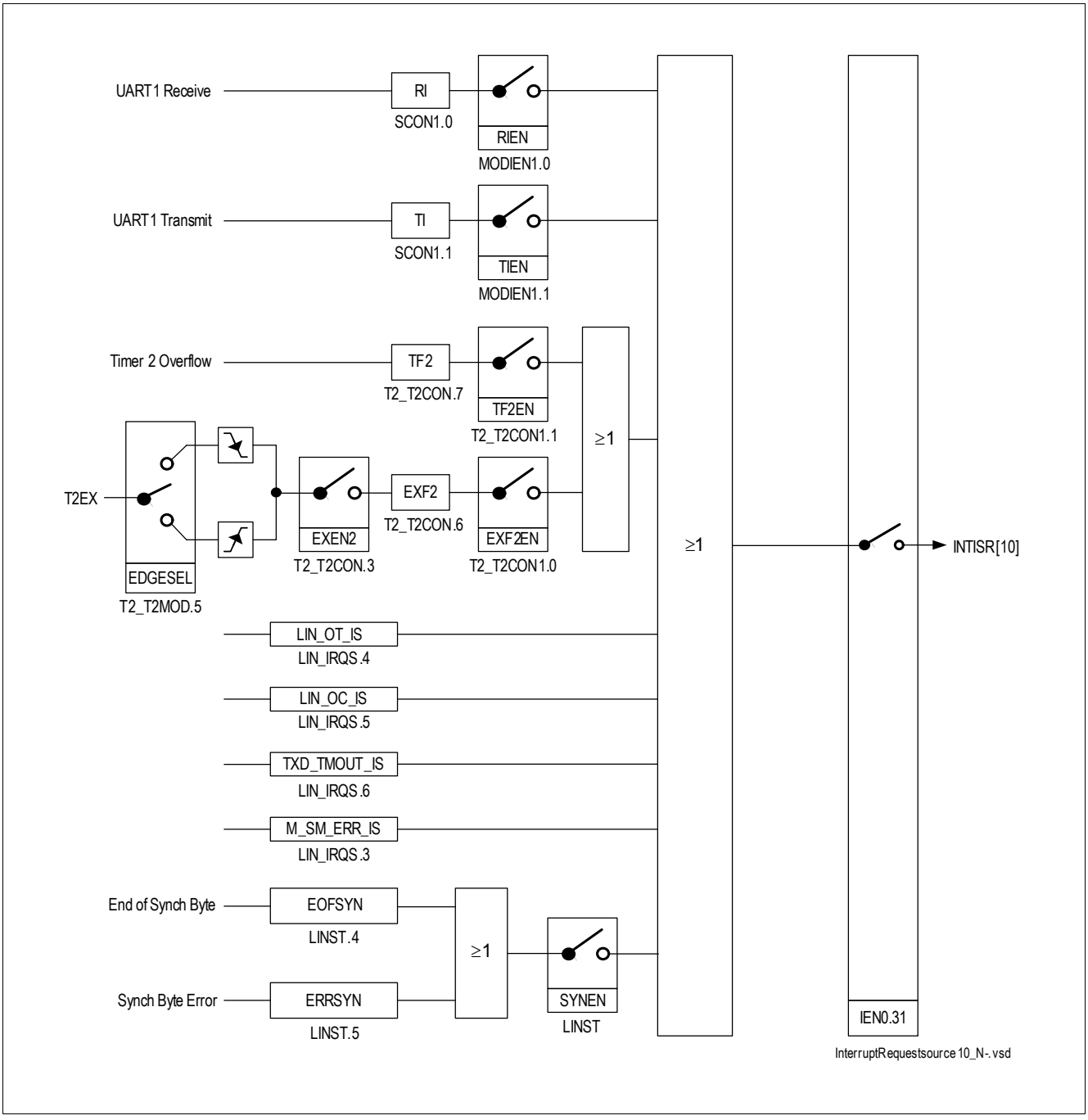

Figure 64 Interrupt Request Source 10 (UART1)

13.3.1.7 Interrupt Node 11 - UART2

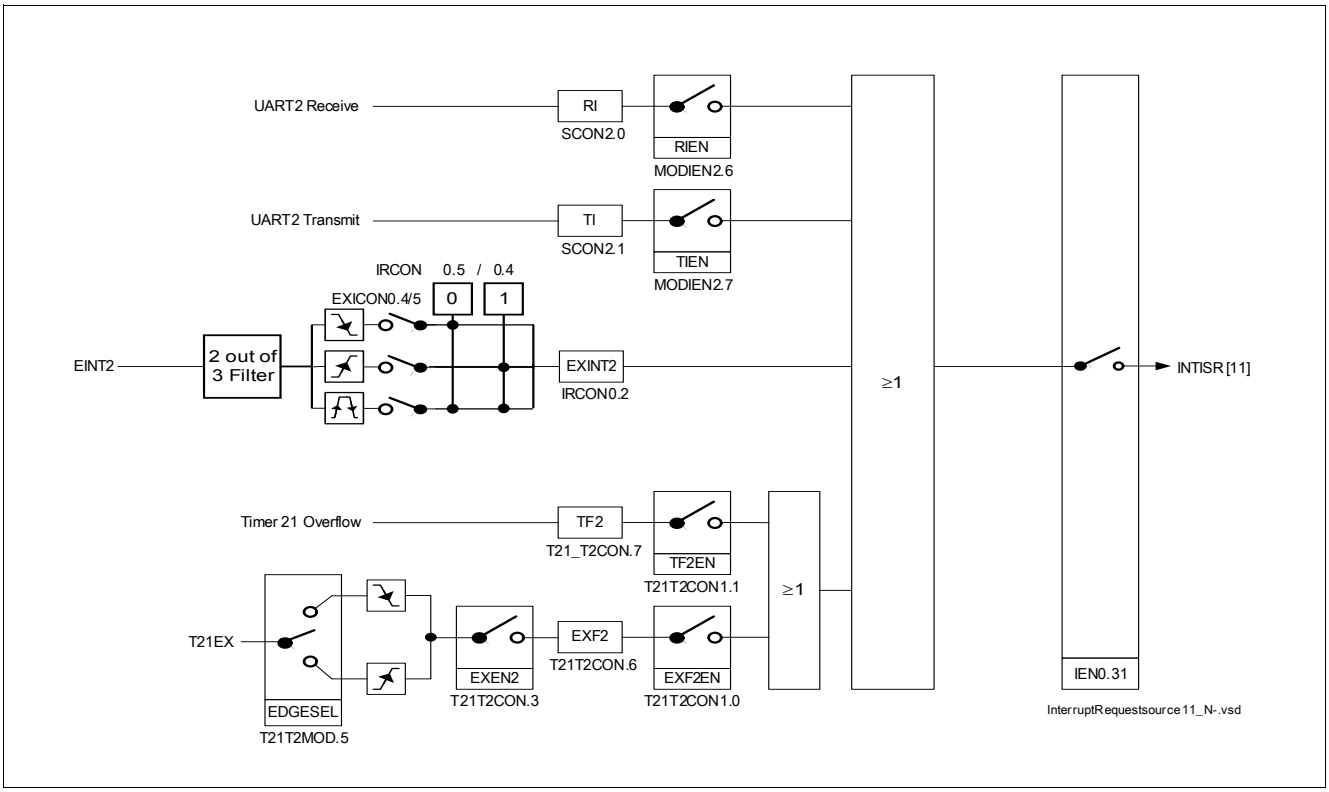

Figure 65 Interrupt Request Source 11 (UART2)

13.3.1.8 Interrupt Node 12 and 13 - Interrupt

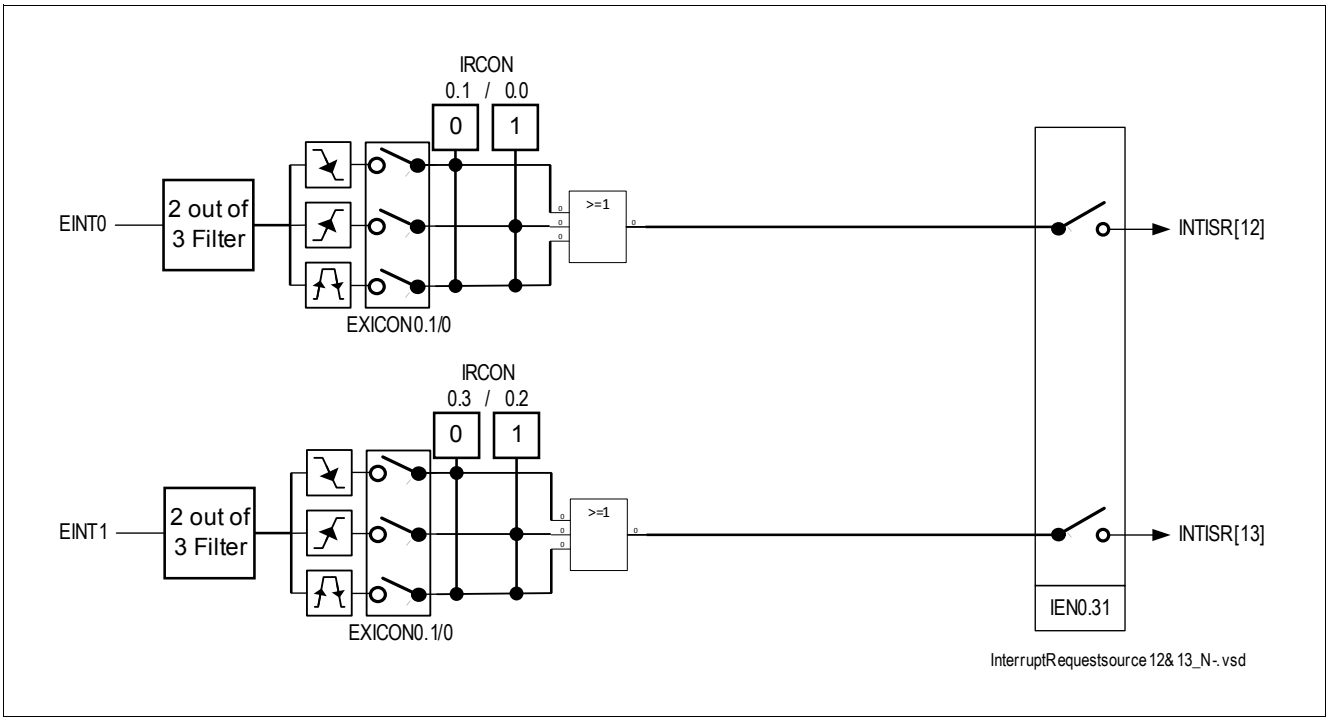

Figure 66 Interrupt Request Sources 12 and 13 (External Interrupt)

13.3.1.9 Interrupt Node 17 and 18 - LS1, LS2

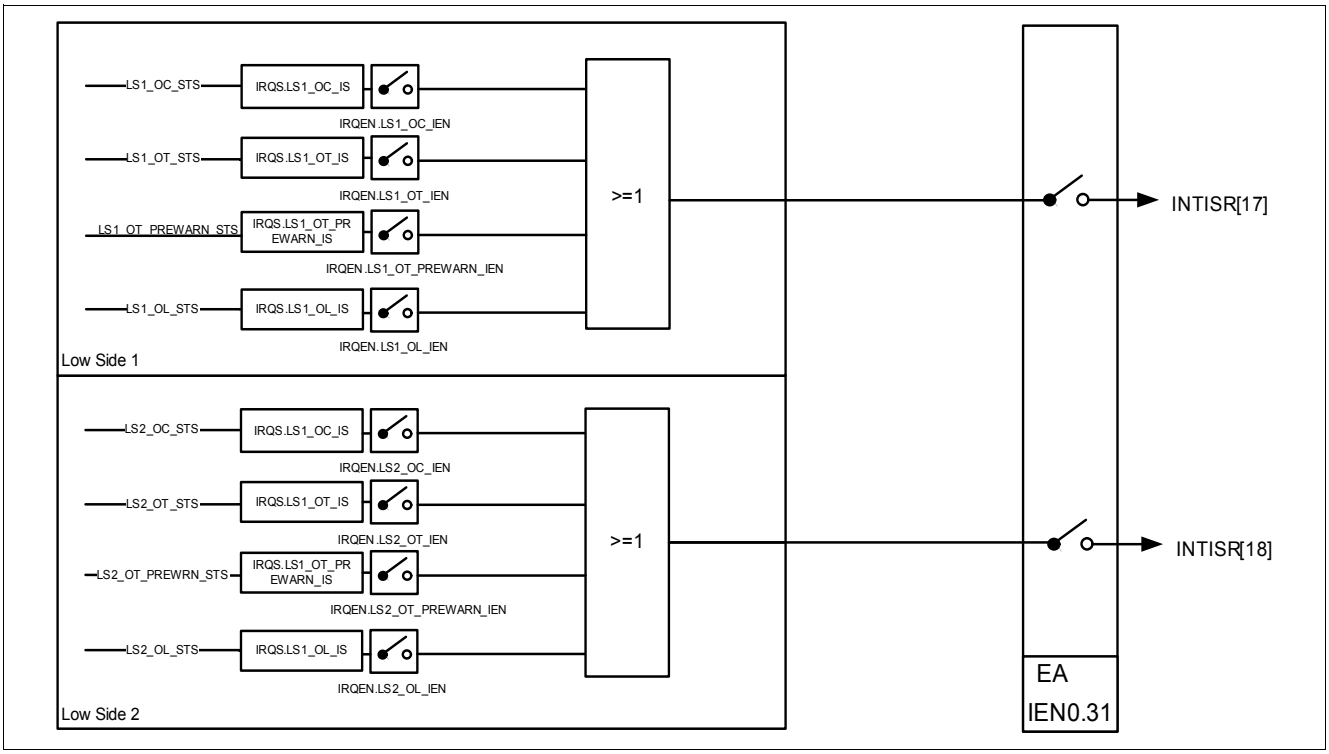

Figure 67 Interrupt Request Sources 17,18 (LS1, LS2)

13.3.1.10 Interrupt Node 19 and 20 - HS1, HS2

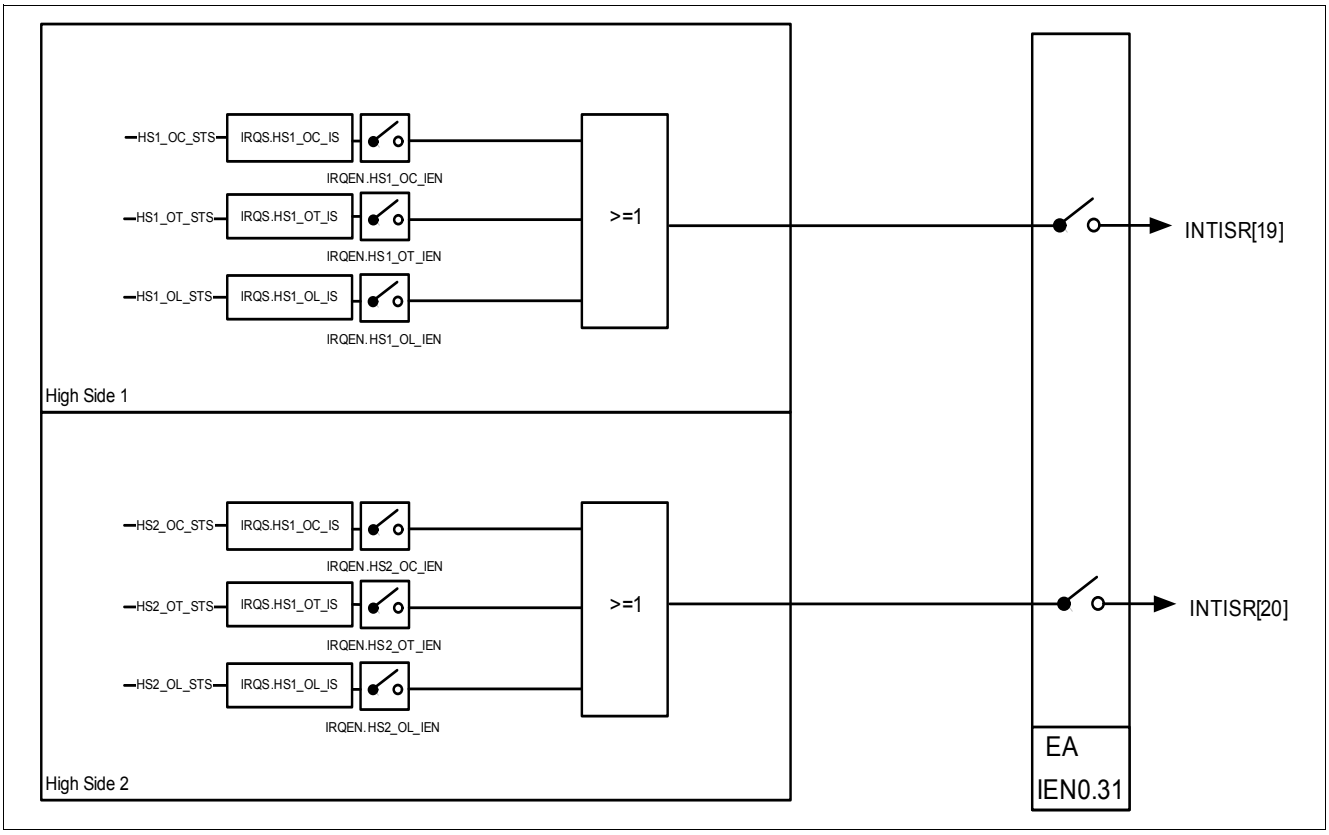

Figure 68 Interrupt Request Sources 19, 20 (HS1, HS2)

13.3.1.11 Interrupt Node 21 - DPP1

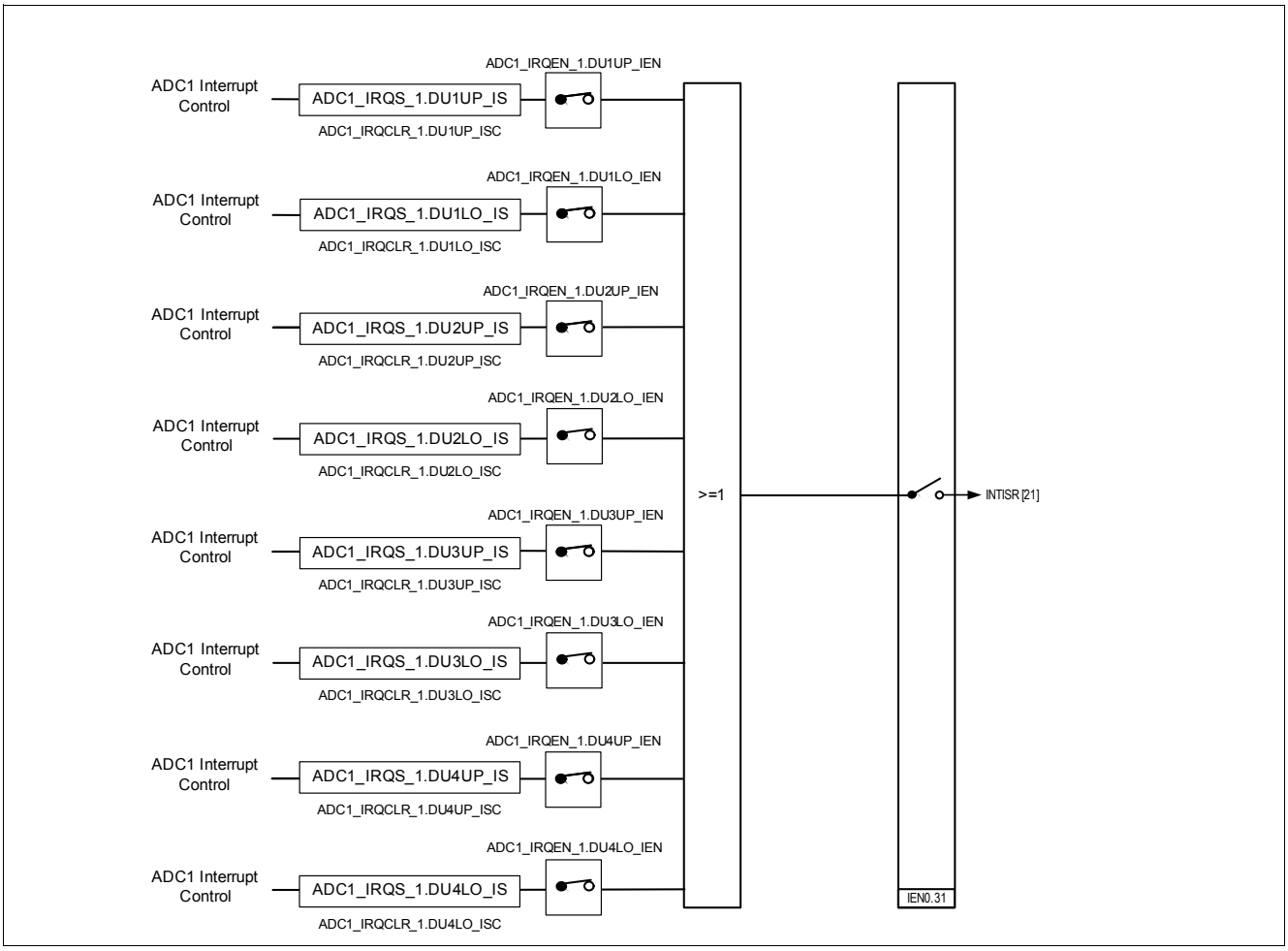

Figure 69 Interrupt Request Sources 21 (DPP1 - Diff Unit)

13.3.1.12 Interrupt Node 22 - MON1..5

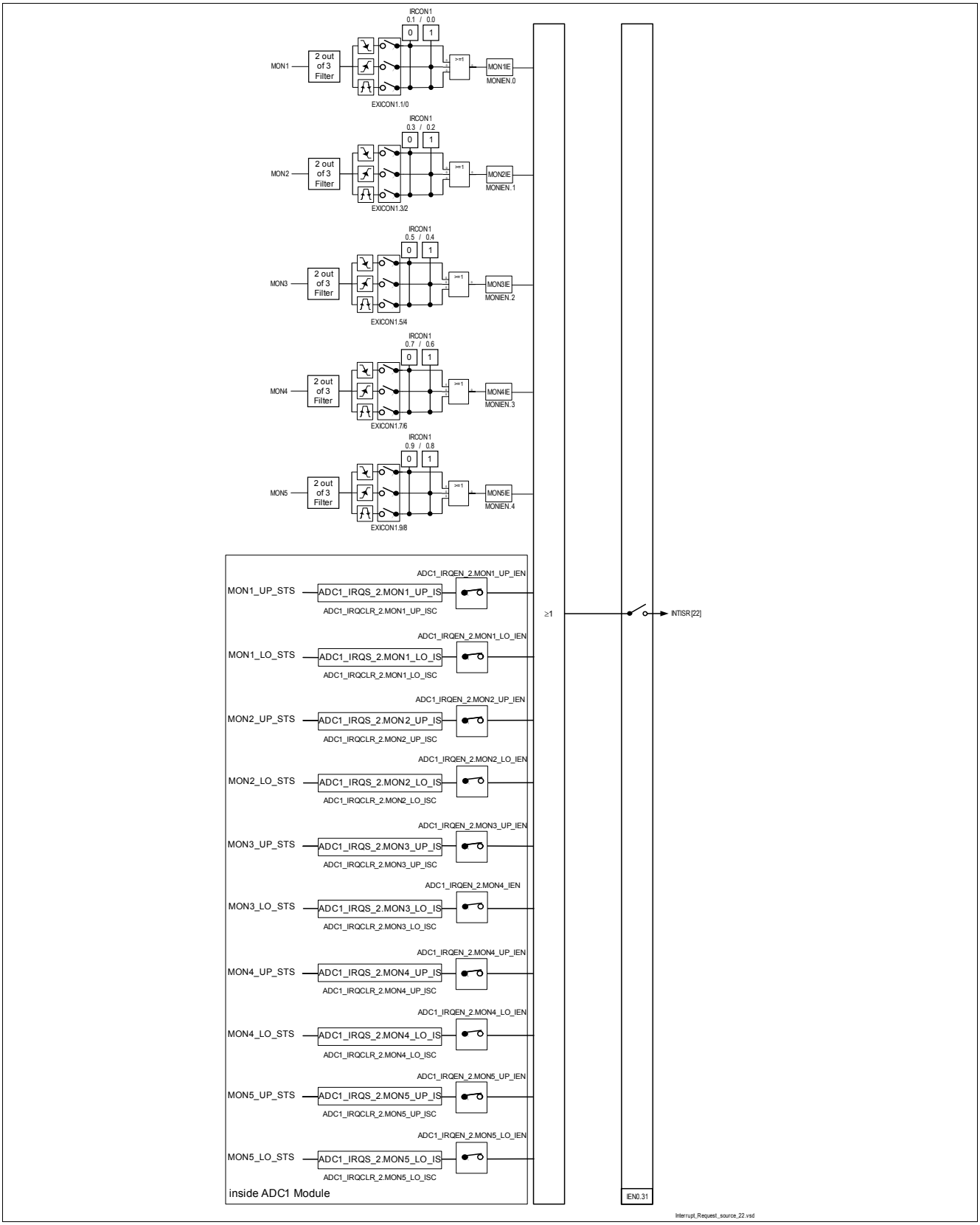

Figure 70 Interrupt Request Sources 22(MON1..5)

13.3.1.13 Interrupt Node 23 - Port2.x

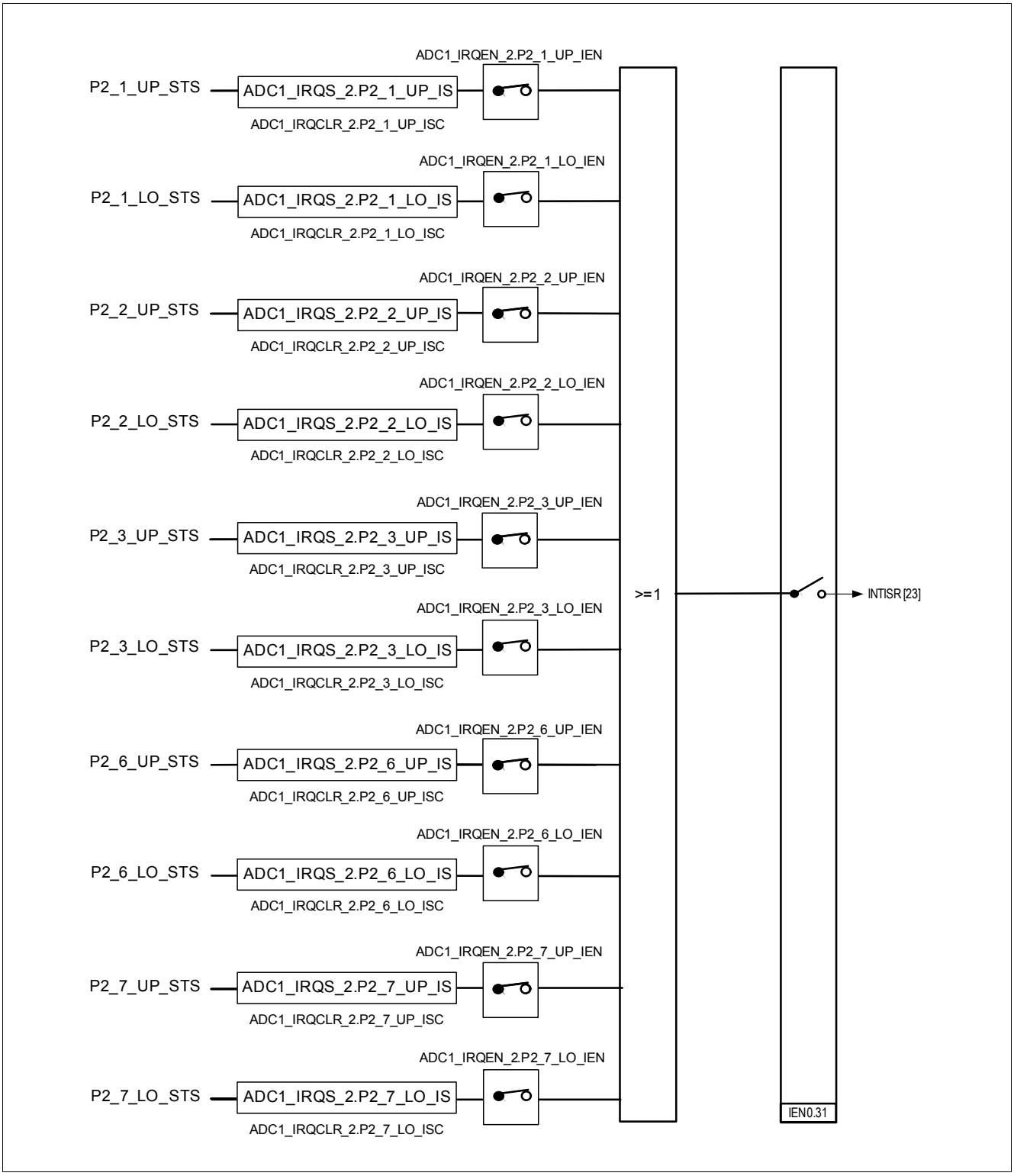

Figure 71 Interrupt Request Sources 23 (Port 2.x

13.3.1.14 Non-Maskable Interrupt Request Source (NMI)

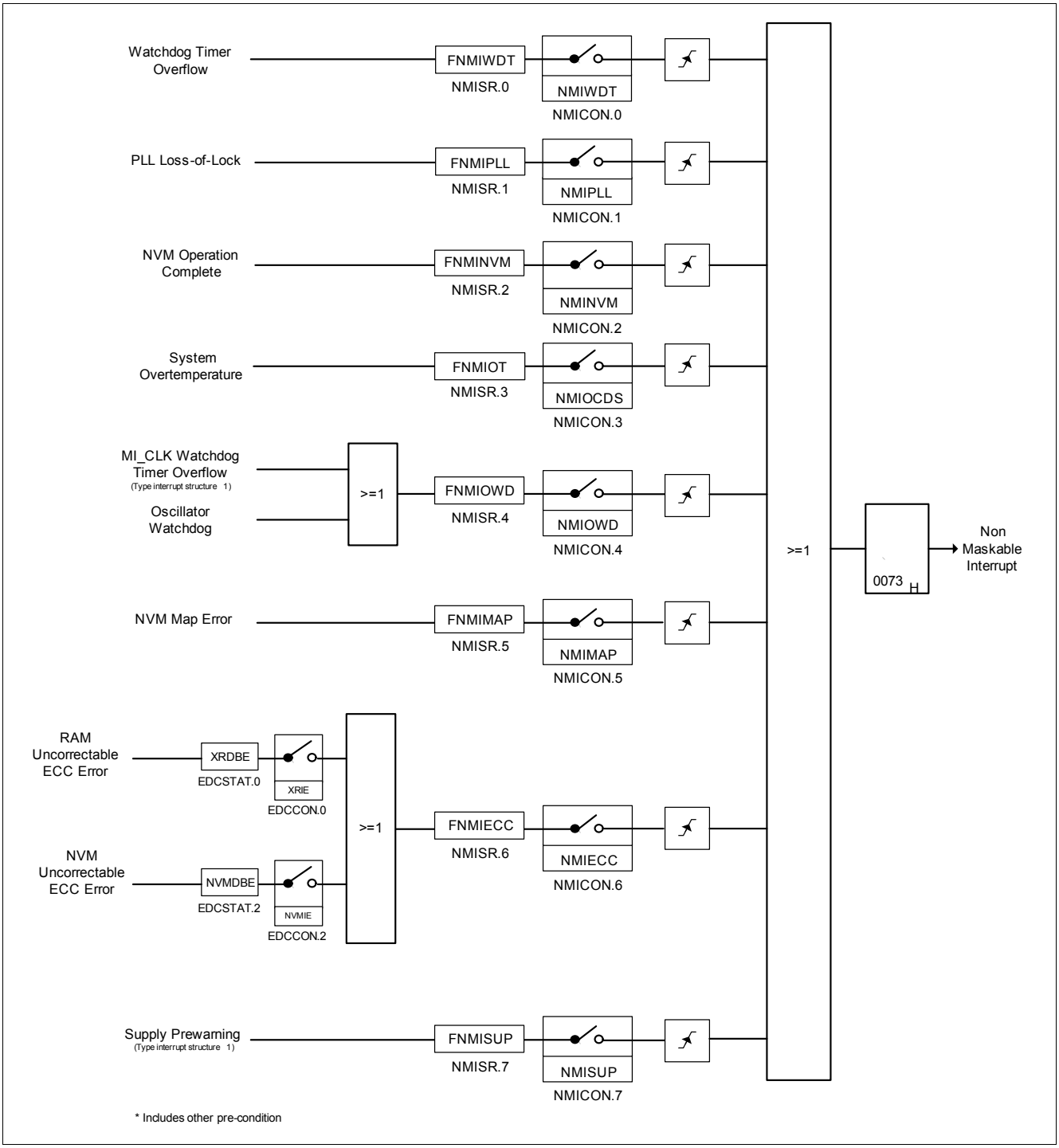

Figure 72 Non-Maskable Interrupt Request Source

13.3.1.15 Interrupt Flags Overview

Table 167 All Interrupt Flags and Enable

Service Request	Node ID	Level/Edge Sensitive	Duration	SFR Flag	Interrupt Enable
None Maskable Interrupts					
OT NMI					
SYS_OTWARN	NMI	edge	set until cleared by software	TEMPSENSE_CTRL.SYS_OTWARN_STS SYS_IS.SYS_OTWARN_IS	SYS_IRQ_CTRL.SYS_OTWARN_IE
SYS_OT	NMI	edge	set until cleared by software	TEMPSENSE_CTRL.SYS_OT_STS SYS_IS.SYS_OT_IS	SYS_IRQ_CTRL.SYS_OT_IE
PMU_OTWARN	NMI	edge	set until cleared by software	TEMPSENSE_CTRL.PMU_OTWARN_STS SYS_IS.PMU_OTWARN_IS	SYS_IRQ_CTRL.PMU_OTWARN_IE
PMU_OT	NMI	edge	set until cleared by software	TEMPSENSE_CTRL.PMU_OT_STS SYS_IS.PMU_OT_IS	SYS_IRQ_CTRL.PMU_OT_IE
Supply NMI					
PREWARN_SUPVBAT_UV	NMI	edge	set until cleared by software	SYS_SUPPLY_IRQ_STS.VBAT_UV_IE	SYS_SUPPLY_IRQ_CTRL.VBAT_UV_IE
PREWARN_SUPVS_UV	NMI	edge	set until cleared by software	SYS_SUPPLY_IRQ_STS.VS_UV_IE	SYS_SUPPLY_IRQ_CTRL.VS_UV_IE
PREWARN_SUPVDD5V_UV	NMI	edge	set until cleared by software	SYS_SUPPLY_IRQ_STS.VDD5V_IE	SYS_SUPPLY_IRQ_CTRL.VDD5V_IE
PREWARN_SUPVDD1V5_UV	NMI	edge	set until cleared by software	SYS_SUPPLY_IRQ_STS.VDD1V5_UV_IE	SYS_SUPPLY_IRQ_CTRL.VDD1V5_IE
PREWARN_SUPVBAT_UV	NMI	edge	set until cleared by software	SYS_SUPPLY_IRQ_STS.VBAT_OV_UV_IE	SYS_SUPPLY_IRQ_CTRL.VBAT_UV_UV_IE
PREWARN_SUPVS_UV	NMI	edge	set until cleared by software	SYS_SUPPLY_IRQ_STS.VS_OV_IE	SYS_SUPPLY_IRQ_CTRL.VS_UV_IE
PREWARN_SUPVDD5V_UV	NMI	edge	set until cleared by software	SYS_SUPPLY_IRQ_STS.VDD5V_OV_IE	SYS_SUPPLY_IRQ_CTRL.VDD5V_OV_IE

Table 167 All Interrupt Flags and Enable (cont'd)

Service Request	Node ID	Level/Edge Sensitive	Duration	SFR Flag	Interrupt Enable
PREWARN_SUP VDD1V5_UV	NMI	edge	set until cleared by software	SYS_SUPPLY_IRQ_STS. VDD1V5_OV_IE	SYS_SUPPLY_IRQ_CTRL .VDD1V5_OV_IE
VDDP_OVERVO LT	NMI	level	set until cleared by software	PMU_SUPPLY_STS.PMU _5V0_OVERVOLT	PMU_SUPPLY_STS.PMU _1V5_FAIL_EN
VDDP_OVERLO AD	NMI	level	set until cleared by software	PMU_SUPPLY_STS.PMU _5V0_OVERLOAD	PMU_SUPPLY_STS.PMU _1V5_FAIL_EN
VDDC_OVERVO LT	NMI	level	set until cleared by software	PMU_SUPPLY_STS.PMU _1V5_OVERVOLT	PMU_SUPPLY_STS.PMU _1V5_FAIL_EN
VDDC_OVERLO AD	NMI	level	set until cleared by software	PMU_SUPPLY_STS.PMU _1V5_OVERLOAD	PMU_SUPPLY_STS.PMU _1V5_FAIL_EN
VDDEXT_OVER TEMP	NMI	level	set until cleared by software	PMU_VDDEXT_CTRL.VD DEXT_OT_IS	PMU_VDDEXT_CTRL.VD DEXT_FAIL_EN
VDDEXT_UNDE RVOLT	NMI	level	set until cleared by software	PMU_VDDEXT_CTRL.VD DEXT_UV_IS	PMU_VDDEXT_CTRL.VD DEXT_FAIL_EN
CLKWDT	NMI	level		SYS_IS.CLKWDT_IS SYS_STS.CLKWDT_STS	AMCLK_CTRL.CLKWDT_I E
ECC Error NMI					
RAM Uncorrectable	NMI	level	set until cleared by software		
NVM Uncorrectable	NMI	level	set until cleared by software		
Boot ROM Uncorrectable	NMI	level	set until cleared by software		
Supply Prewarning	NMI	level	set until cleared by software		
INTISR<0/1> → GPT12					
GPT12-T2	0	level	2 per_clk cycles	GPT1_T2: **SCU_GPT12IRC**.GPT1T2	GPT12IEN:GPT12T2IE
GPT12-T3	0	level	2 per_clk cycles	GPT1_T3: **SCU_GPT12IRC**.GPT1T3	GPT12IEN:GPT12T3IE
GPT12-T4	0	level	2 per_clk cycles	GPT1_T4: **SCU_GPT12IRC**.GPT1T4	GPT12IEN:GPT12T4IE

Table 167 All Interrupt Flags and Enable (cont'd)

Service Request	Node ID	Level/Edge Sensitive	Duration	SFR Flag	Interrupt Enable
GPT12-T5	1	level	2 per_clk cycles	GPT2_T5: SCU_GPT12IRC.GPT2T5	GPT12IEN:GPT12T5IE
GPT12-T6	1	level	2 per_clk cycles	GPT2_T6: SCU_GPT12IRC.GPT2T6	GPT12IEN:GPT12T6IE
GPT12-CR	0/1	level	2 per_clk cycles	GPT2_CR: SCU_GPT12IRC.GPT2CR	GPT12IEN:GPT12CRIE
INTISR<2> → MU					
REF_BG_LO	2	level	set until cleared by software	SYS_IS.REFBG_LOTHWARN_IS REF1_CTRL.REFBG_LOTHWARN_STS	SYS_IRQ_CTRL.REFBG_LOTHWARN_IE
REF_BG_HI	2	level	set until cleared by software	SYS_IS.REFBG_UPTHWARN_IS REF1_CTRL.REFBG_HITHWARN_STS	SYS_IRQ_CTRL.REFBG_UPTHWARN_IE
INTISR<3> → ADC 10 Bit					
ADC10CH1	3	level	set until cleared by software	ADC1_Interrupt_Control: ADC1CH1_STS.ADC1_IRC	ADC1_IE.ADC1_CH1_IE
ADC10CH2	3	level	set until cleared by software	ADC1_Interrupt_Control: ADC1CH2_STS.ADC1_IRC	ADC1_IE.ADC1_CH2_IE
ADC10-CH3	3	level	set until cleared by software	ADC1_Interrupt_Control: ADC1CH3_STS.ADC1_IRC	ADC1_IE.ADC1_CH3_IE
ADC10-CH4	3	level	set until cleared by software	ADC1_Interrupt_Control: ADC1CH4_STS.ADC1_IRC	ADC1_IE.ADC1_CH4_IE
ADC10-CH5	3	level	set until cleared by software	ADC1_Interrupt_Control: ADC1CH5_STS.ADC1_IRC	ADC1_IE.ADC1_CH5_IE
ADC10-CH6	3	level	set until cleared by software	ADC1_Interrupt_Control: ADC1CH6_STS.ADC1_IRC	ADC1_IE.ADC1_CH6_IE
ADC10-CH7	3	level	set until cleared by software	ADC1_Interrupt_Control: ADC1CH7_STS.ADC1_IRC	ADC1_IE.ADC1_CH7_IE
ADC10-CH8	3	level	set until cleared by software	ADC1_Interrupt_Control: ADC1CH8_STS.ADC1_IRC	ADC1_IE.ADC1_CH8_IE
ADC10-CH9	3	level	set until cleared by software	ADC1_Interrupt_Control: ADC1CH9_STS.ADC1_IRC	ADC1_IE.ADC1_CH9_IE

Table 167 All Interrupt Flags and Enable (cont'd)

Service Request	Node ID	Level/Edge Sensitive	Duration	SFR Flag	Interrupt Enable
ADC10-CH10	3	level	set until cleared by software	ADC1_Interrupt_Control: ADC1CH10_STS.ADC1_IRC	ADC1_IE.ADC1_CH10_IE
ADC10-CH11	3	level	set until cleared by software	ADC1_Interrupt_Control: ADC1CH11_STS.ADC1_IRC	ADC1_IE.ADC1_CH11_IE
ADC10-CH12	3	level	set until cleared by software	ADC1_Interrupt_Control: ADC1CH12_STS.ADC1_IRC	ADC1_IE.ADC1_CH12_IE
ADC10-ESM	3	level	set until cleared by software	ADC1_Interrupt_Control: ADC1ESM_STS.ADC1_IRC	ADC1_IE.ADC1_ESM_IE
ADC10-EIM	3	level	set until cleared by software	ADC1_Interrupt_Control: ADC1EIM_STS.ADC1_IRC	ADC1_IE.ADC1_EIM_IE
INTISR<4,5,6,7> → CCU6					
CCU0[1)]	4	level	2 per_clk cycles	CCU6 Node 0: **SCU_IRCON4**.CCU6SR0	**SCU_IEN0**.ECCIP0
CCU1[1)]	5	level	2 per_clk cycles	CCU6 Node 1: **SCU_IRCON4**.CCU6SR1	**SCU_IEN0**.ECCIP1
CCU2[1)]	6	level	2 per_clk cycles	CCU6 Node 2: **SCU_IRCON4**.CCU6SR2	**SCU_IEN0**.ECCIP2
CCU3[1)]	7	level	2 per_clk cycles	CCU6 Node 3: **SCU_IRCON4**.CCU6SR3	**SCU_IEN0**.ECCIP3
INTISR<8,9> → SSC1/SSC2					
SSC1	8	level	2 per_clk cycles	SSC1.SSC_EIR1: **SCU_IRCON2**.EIR	MODIEN1.EIREN
SSC1	8	level	2 per_clk cycles	SSC1.SSC_TIR1: **SCU_IRCON2**.TIR	MODIEN1.TIREN
SSC1	8	level	2 per_clk cycles	SSC1.SSC_RIR1: **SCU_IRCON2**.RIR	MODIEN1.RIREN
SSC2	9	level	2 per_clk cycles	SSC2.SSC_EIR1: **SCU_IRCON3**.EIR	MODIEN1.EIREN
SSC2	9	level	2 per_clk cycles	SSC2.SSC_TIR1: **SCU_IRCON3**.TIR	MODIEN1.TIREN
SSC2	9	level	2 per_clk cycles	SSC2.SSC_RIR1: **SCU_IRCON3**.RIR	MODIEN1.RIREN
INTISR<10,11> → UART1/UART2					

Table 167 All Interrupt Flags and Enable (cont'd)

Service Request	Node ID	Level/Edge Sensitive	Duration	SFR Flag	Interrupt Enable
UART1 Receive	10	level	copy of RI bit, set until cleared by software	UART1: **SCU_SCON1**.RI	UART1: MODIEN2.RIEN
UART1 Transmit	10	level	copy of TI bit, set until cleared by software	UART1: **SCU_SCON1**.TI	UART1: MODIEN2.TIEN
LIN sync byte error	10	level		Synch Byte Error: LINST.ERRSYN	SYNCST.SYNEN
LIN end of sync byte	10	level		End of Synch Byte: LINST.EOFSYN	SYNCST.SYNEN
Timer 2	10	level		Timer2 Overflow: T2_T2CON.TF2	T2_T2CON1.TF2EN
T2EX	10			T2EX: T2_T2CON.EXF2	T2_T2CON1.EXF2EN
LIN OT	10	level		LIN: SYS_IS.LIN_OT_IS	SYS_IRQ_CTRL.LIN_OT_IE
LIN OC	10	level		LIN: SYS_IS.LIN_OC_IS	SYS_IRQ_CTRL.LIN_OC_IE
TXD_TMOUT	10			LIN: SYS_IS.LIN_TMOUT_IS	SYS_IRQ_CTRL.LIN_TMOUT_IE
T21EX	10			T21EX: T21T2CON.EXF2	T21T2CON1.EXF2EN
UART2 Receive	11	level	copy of RI bit, set until cleared by software	UART2: **SCU_SCON2**.RI	UART2: MODIEN2.RIEN
UART2 Transmit	11	level	copy of TI bit, set until cleared by software	UART2: **SCU_SCON2**.TI	UART2: MODIEN2.TIEN
exint2	11	level		EINT2: **SCU_EXICON0**.EXINT2	MODIEN4.IE2
Timer 21	11	level		Timer21 Overflow: T2_T2CON.TF2	T21_T2CON1.TF2EN
T21EX	11			T21EX: T21_T2CON.EXF2	T21_T2CON1.EXF2EN
INTISR<12,13> → EXTINT0/EXTINT1					
exint0	12	level		EINT0: **SCU_EXICON0**.EXINT0	MODIEN3.IE0

Table 167 All Interrupt Flags and Enable (cont'd)

Service Request	Node ID	Level/Edge Sensitive	Duration	SFR Flag	Interrupt Enable
exint1	13	level		EINT1: SCU_EXICON0.EXINT1	MODIEN4.IE1
INTISR<14> → Wakeup					
wakeup	14	edge		Wake: SCU_IRCON5.WAKEUP	SCU_WAKECON.WAKEUPEN
INTISR<17,18> → LS1, LS2					
LS1	17_0	level	set until cleared by software	LS1_OC: LS_IRQS.LS1_OC_STS	LS_IRQEN.LS1_OC_IEN
LS1	17_1	edge	set until cleared by software	LS1_OT: LS_IRQS.LS1_OT_STS	LS_IRQEN.LS1_OT_IEN
LS1	17_2	edge	set until cleared by software	LS1_OL: LS_IRQS.LS1_OL_STS	LS_IRQEN.LS1_OL_IEN
LS2	18_0	level	set until cleared by software	LS2_OC: LS_IRQS.LS2_OC_STS	LS_IRQEN.LS2_OC_IEN
LS2	18_1	edge	set until cleared by software	LS2_OT: LS_IRQS.LS2_OT_STS	LS_IRQEN.LS2_OT_IEN
LS2	18_2	edge	set until cleared by software	LS2_OL: LS_IRQS.LS2_OL_STS	LS_IRQEN.LS2_OL_IEN
INTISR<19,20> → HS1,HS2					
HS1	19_0	level	set until cleared by software	HS1_OC: HS_1_IS.OC_STS	HS_1_IEN.OC_IEN
HS1	19_1	edge	set until cleared by software	HS1_OT: HS_1_IS.OT_STS	HS_1_IEN.OT_IEN
HS1	19_2	edge	set until cleared by software	HS2_OL: HS_1_IS.OL_STS	HS_1_IEN.OL_IEN
HS2	20_0	level	set until cleared by software	HS2_OC: HS_2_IS.OC_STS	HS_2_IEN.OC_IEN
HS2	20_1	edge	set until cleared by software	HS2_OT: HS_2_IS.OT_STS	HS_2_IEN.OT_IEN
HS2	20_2	edge	set until cleared by software	HS2_OL: HS_2_IS.OL_STS	HS_2_IEN.OL_IEN

Table 167 All Interrupt Flags and Enable (cont'd)

Service Request	Node ID	Level/Edge Sensitive	Duration	SFR Flag	Interrupt Enable
INTISR<22> → Wakeup					
WAKEUP	22_0		set until cleared by software	**SCU_EXICON1**.MON1	MONIEN.MON1IE
WAKEUP	22_1		set until cleared by software	**SCU_EXICON1**.MON2	MONIEN.MON2IE
WAKEUP	22_2		set until cleared by software	**SCU_EXICON1**.MON3	MONIEN.MON3IE
WAKEUP	22_3		set until cleared by software	**SCU_EXICON1**.MON4	MONIEN.MON4IE
WAKEUP	22_4		set until cleared by software	**SCU_EXICON1**.MON5	MONIEN.MON5IE

1) Each CCU6 interrupt can be assigned to any of the CCU6 interrupt nodes [3:0] via CCU6 registers INPL/INPH.

13.4 Interrupt Structure

An interrupt event source may be generated from the on-chip peripherals or from external. Detection of interrupt events is controlled by the respective on-chip peripherals. Interrupt status flags are available for determining which interrupt event has occurred, especially useful for an interrupt node which is shared by several event sources. Each interrupt node (except NMI) has a global enable/disable bit. In most cases, additional enable bits are provided for enabling/disabling particular interrupt events (provided for NMI events). No interrupt will be requested for any occurred event that has its interrupt enable bit disabled.

The TLE984xQX has, in general, two interrupt structures distinguished mainly by the manner in which the pending interrupt request (one per interrupt vector/node going directly to the core) is generated (due to the events) and cleared.

Common among these two interrupt structures is the interrupt masking bit, EA, which is used to globally enable or disable all interrupt requests (except NMI) to the core. Resetting bit EA to 0 only masks the pending interrupt requests from the core, but does not block the capture of incoming interrupt requests.

13.4.1 Interrupt Structure 1

For interrupt structure 1 (see **Figure 73**), the interrupt event will set the interrupt status flag which doubles as a pending interrupt request to the core. An active pending interrupt request will interrupt the core only if it is corresponding interrupt node is enabled. Once an interrupt node is serviced (interrupt acknowledged), its pending interrupt request (represented by the interrupt status flag) may be automatically cleared by hardware (the core).

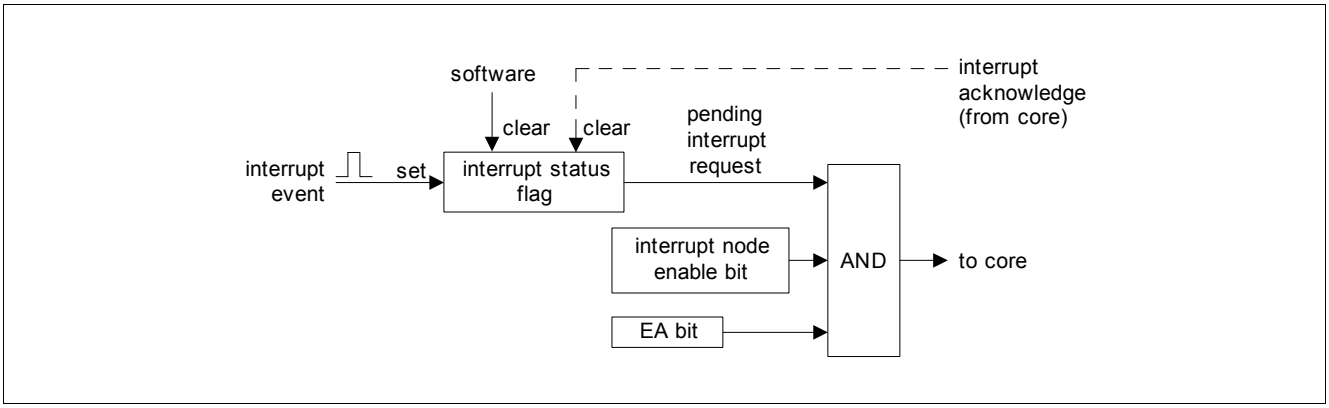

Figure 73 Interrupt Structure 1

For the TLE984xQX, interrupt sources like ADC10, MU and Bridge Driver (each have a dedicated interrupt node) will have their respective interrupt status flags in the dedicated registers. This flags are not cleared by the core once their corresponding pending interrupt request is serviced. They have to cleared by software. For the UART which has its dedicated interrupt node, interrupt status flags RI and TI in register SCON will not be cleared by the core even when its pending interrupt request is serviced. The UART interrupt status flags (and hence the pending interrupt request) can only be cleared by software.

Note: The supply prewarning NMI, prewarning overtemperature & MI_CLK WDT, NMI events are of interrupt structure 1. However, only the supply prewarning NMI request source is of interrupt structure 1.

13.5 Interrupt Source and Vector

Each interrupt event source has an associated interrupt vector address for the interrupt node it belongs to. This vector is accessed to service the corresponding interrupt node request. The interrupt service of each interrupt node can be individually enabled or disabled via an enable bit. The assignment of the TLE984xQX interrupt sources to the interrupt vector address and the corresponding interrupt node enable bits are summarized in Table 165.

Table 168 Interrupt Vector Address

Interrupt Node	Vector Address	Assignment for TLE984xQX	Enable Bit	SFR	Interrupt Structure
NMI	XXXX_H	Watchdog Timer NMI	NMIWDT	SCU_NMICON	1
		PLL NMI	NMIPLL		1
		NVM Operation Complete NMI	NMINVM		1
		Overtemperature NMI	NMIOT		1
		Oscillator Watchdog NMI	NMIOWD		1
		NVM Map Error NMI	NMIMAP		1
		ECC Error NMI	NMIECC		1
		Supply Prewarning NMI	NMISUP		1
INTISR[0]	XXXX_H	GPT1_T2, GPT1_T3, GPT1_T4	GPT12	GPT12IEN	2
INTISR[1]	XXXX_H	GPT2_T5, GPT2_T6, GPT2_CR	GPT12	GPT12IEN	2
INTISR[2]	XXXX_H	MU	EMU	SYS_IRQ_CTRL	1
INTISR[3]	XXXX_H	ADC10		ADC1	1
INTISR[4]	XXXX_H	CCU6 Node 0	CCU6SR0	IRCON3.0	2
INTISR[5]	XXXX_H	CCU6 Node 1	CCU6SR1	IRCON3.4	2
INTISR[6]	XXXX_H	CCU6 Node 2	CCU6SR2	IRCON4.0	2
INTISR[7]	XXXX_H	CCU6 Node 3	CCU6SRC3	IRCON4.4	2
INTISR[8]	XXXX_H	SSC1	EIREN	MODIEN1.0	2
			TIREN	MODIEN1.1	2
			RIREN	MODIEN1.2	2
INTISR[9]	XXXX_H	SSC2	EIREN	MODIEN2.0	2
			TIREN	MODIEN2.1	2
			RIREN	MODIEN2.2	2
INTISR[10]	XXXX_H	UART1 Receive	RIEN1	MODIEN2.0	2
		UART1 Transmit	TIEN1	MODIEN2.1	2
		Timer 2 Overflow	TF2EN	T2_T2CON1.1	2
		T2EX	EXF2EN	T2_T2CON1.0	2
		LIN_OT_STS	LIN_OT_IE	SYS_IRQ_CTRL	2
		LIN_OC_STS	LIN_OC_IE	SYS_IRQ_CTRL	2

Table 168 Interrupt Vector Address (cont'd)

Interrupt Node	Vector Address	Assignment for TLE984xQX	Enable Bit	SFR	Interrupt Structure
		TXD_TMOUT	LIN_TMOUT_IE	SYS_IRQ_CTRL/SCU_IEN0	2
		EOFSYN	SYNEN	SYNCST	2
		ERRSYN			2
INTISR[11]	XXXX_H	UART2 Receive	RIEN2	MODIEN2.6	2
		UART2 Transmit	TIEN2	MODIEN2.7	2
		Timer 21 Overflow	TF2EN/	T21T2CON1.1	2
		T21EX	EXF2EN	T21T2CON1.0	2
INTISR[12]	XXXX_H	EINT0	IE0	MODIEN3	2
INTISR[13]	XXXX_H	EINT1	IE1	MODIEN4	2
INTISR[14]	XXXX_H	Wake	WAKECON	WAKEUPEN	2
INTISR[17]	XXXX_H	LS1_OC	LS1_OC_IE	HS_LS_IRQ_CTRL	1
		LS1_OT	LS1_OT_IE	HS_LS_IRQ_CTRL	1
		LS1_OL	LS1_OL_IE	HS_LS_IRQ_CTRL	1
INTISR[18]	XXXX_H	LS2_OC	LS2_OC_IE	HS_LS_IRQ_CTRL	1
		LS2_OT	LS2_OT_IE	HS_LS_IRQ_CTRL	1
		LS2_OL	LS2_OL_IE	HS_LS_IRQ_CTRL	1
INTISR[19]	XXXX_H	HS1_OC	HS1_OC_IE	HS_1_IEN	1
		HS1_OT	HS1_OT_IE	HS_1_IEN	1
		HS1_OL	HS1_OL_IE	HS_1_IEN	1
INTISR[20]	XXXX_H	HS2_OC	HS2_OC_IE	HS_2_IEN	1
		HS2_OT	HS2_OT_IE	HS_2_IEN	1
		HS2_OL	HS2_OL_IE	HS_2_IEN	1
INTISR[21]	XXXX_H	DU1	DU1UP_IEN / DU1LO_IEN	ADC1_IRQEN_1	1
		DU2	DU2UP_IEN / DU2LO_IEN	ADC1_IRQEN_1	1
		DU3	DU3UP_IEN / DU3LO_IEN	ADC1_IRQEN_1	1
		DU4	DU4UP_IEN / DU4LO_IEN	ADC1_IRQEN_1	1
INTISR[22]	XXXX_H	MON1	MON1IE	MONIEN	1
		MON2	MON2IE	MONIEN	1

Table 168 Interrupt Vector Address (cont'd)

Interrupt Node	Vector Address	Assignment for TLE984xQX	Enable Bit	SFR	Interrupt Structure
		MON3	MON3IE	MONIEN	1
		MON4	MON4IE	MONIEN	1
		MON5	MON5IE	MONIEN	1
INTISR[23]		Port2.1	P2_1_UP_IEN / P2_1_LO_IEN	ADC1_IRQEN_2	1
		Port2.2	P2_2_UP_IEN / P2_2_LO_IEN	ADC1_IRQEN_2	1
		Port2.3	P2_3_UP_IEN / P2_3_LO_IEN	ADC1_IRQEN_2	1
		Port2.6	P2_6_UP_IEN / P2_6_LO_IEN	ADC1_IRQEN_2	1
		Port2.7	P2_7_UP_IEN / P2_7_LO_IEN	ADC1_IRQEN_2	1

13.6 Interrupt Priority

An interrupt that is currently being serviced can only be interrupted by a higher-priority interrupt, but not by another interrupt of the same or lower priority. Hence, an interrupt of the highest priority cannot be interrupted by any other interrupt request.

If two or more requests of different priority levels are received simultaneously, the request with the highest priority is serviced first. If requests of the same priority are received simultaneously, an internal polling sequence determines which request is serviced first. Thus, within each priority level, there is a second priority structure determined by the polling sequence as shown in **Table 167**.

Table 169 Interrupt Node Table

Service Request	Node ID	Description
GPT1	0	GPT1 interrupt (T2-T4)
GPT2	1	GPT2 interrupt (T5-T6, CR)
MU	2	Measurement Unit / ADC2, VBG
ADC1	3	ADC 10 bit interrupt / VREF5V Overload / VREF5V OV/UV
CCU0	4	CCU6 node 0 interrupt
CCU1	5	CCU6 node 1 interrupt
CCU2	6	CCU6 node 2 interrupt
CCU3	7	CCU6 node 3 interrupt
ssc1	8	SSC1 interrupt (receive, transmit, error)
ssc2	9	SSC2 interrupt (receive, transmit, error)
uart1	10	UART1 (ASC-LIN) interrupt (receive, transmit), t2, linsync1, LIN
uart2	11	UART2 interrupt (receive, transmit), t21, linsync2, External interrupt (EINT2)
exint0	12	External interrupt (EINT0), wakeup
exint1	13	External interrupt (EINT1)
wakeup	14	wakeup interrupt
LS1	17	Low Side Driver 1
LS2	18	Low Side Driver 2
HS1	19	High Side Driver 1
HS2	20	High Side Driver 2
DU	21	Differential Unit - DPP1 (only TLE9845QX)
MONx	22	MONx Interrupt - DPP1
Port 2.x	23	Port 2.x Interrupt - DPP1

The interrupt priority is configured in the corresponding NVIC control register:

Table 170

Register Short name	Register Long Name	Offset Address	Reset Value
CPU_NVIC_IPR0	Interrupt Priority	400_H	0000 0000_H
CPU_NVIC_IPR1	Interrupt Priority	404_H	0000 0000_H
CPU_NVIC_IPR2	Interrupt Priority	408_H	0000 0000_H

Table 170 (cont'd)

Register Short name	Register Long Name	Offset Address	Reset Value
CPU_NVIC_IPR3	Interrupt Priority	$40C_H$	0000 0000$_H$
CPU_NVIC_IPR4	Interrupt Priority	410_H	0000 0000$_H$
CPU_NVIC_IPR5	Interrupt Priority	414_H	0000 0000$_H$

For further description see ARM_Architecture_v7n_Reference_Manual.

13.7 Interrupt Handling

See also ARM_Architecture_v7n_Reference_Manual. The most important Interrupt Registers are listed below. This registers are dedicated to the 16 available interrupt nodes. For all nodes which are a combination of several interrupt requests, the corresponding control and status registers are located in the System Control Unit (SCU) or the System Control Unit for the Power Modules (SCU_PM).

Table 171

Register Short name	Register Long Name	Offset Address	Reset Value
CPU_NVIC_ISER	Interrupt Set-Enable	100_H	0000 0000$_H$
CPU_NVIC_ICER	Interrupt Clear-Enable	180_H	0000 0000$_H$
CPU_NVIC_ISPR	Interrupt Set-Pending	200_H	0000 0000$_H$
CPU_NVIC_ICPR	Interrupt Clear-Pending	280_H	0000 0000$_H$

13.8 Interrupt Registers

Interrupt registers are used for interrupt node enable, external interrupt control, interrupt flags and interrupt priority setting.

Table 172 Register Address Space

Module	Base Address	End Address	Note
SCU	50005000_H	$50005FFF_H$	SCU

Table 173 Register Overview

Register Short Name	Register Long Name	Offset Address	Reset Value
Interrupt Registers, Interrupt Node Enable Registers			
SCU_IEN0	Interrupt Enable Register 0	$01C_H$	$0000\ 0000_H$
SCU_NMICON	NMI Control Register	024_H	$0000\ 0000_H$
Interrupt Registers, External Interrupt Control Registers			
SCU_EXICON0	External Interrupt Control Register 0	028_H	$0000\ 0030_H$
SCU_EXICON1	External Interrupt Control Register 1	$02C_H$	$0000\ 0030_H$
SCU_WAKECON	Wakeup Interrupt Control Register	078_H	$0000\ 0000_H$
Interrupt Registers, Interrupt Flag Registers			
SCU_SCON1	UART1 Control/Status Register	xxx_H	$0000\ 0000_H$
SCU_SCON2	UART2 Control/Status Register	xxx_H	$0000\ 0000_H$
SCU_IRCON0	Interrupt Request Register 0	004_H	$0000\ 0000_H$
SCU_IRCON0CLR	Interrupt Request 0 Clear Register	178_H	$0000\ 0000_H$
SCU_IRCON1	Interrupt Request Register 1	008_H	$0000\ 0000_H$
SCU_IRCON1CLR	Interrupt Request 1 Clear Register	$17C_H$	$0000\ 0000_H$
SCU_IRCON2	Interrupt Request Register 2	$00C_H$	$0000\ 0000_H$
SCU_IRCON2CLR	Interrupt Request 2 Clear Register	190_H	$0000\ 0000_H$
SCU_IRCON3	Interrupt Request Register 3	010_H	$0000\ 0000_H$
SCU_IRCON3CLR	Interrupt Request 3 Clear Register	194_H	$0000\ 0000_H$
SCU_IRCON4	Interrupt Request Register 4	014_H	$0000\ 0000_H$
SCU_IRCON4CLR	Interrupt Request 4 Clear Register	198_H	$0000\ 0000_H$
SCU_IRCON5	Interrupt Request Register 5	$07C_H$	$0000\ 0000_H$
SCU_IRCON5CLR	Interrupt Request 5 Clear Register	$19C_H$	$0000\ 0000_H$
SCU_NMISR	NMI Status Register	018_H	$0000\ 0000_H$
SCU_NMISRCLR	NMI Status Clear Register	000_H	$0000\ 0000_H$
SCU_GPT12IRC	Timer and Counter Control/Status Register	160_H	$0000\ 0000_H$
SCU_GPT12ICLR	Timer and Counter Control/Status Clear Register	180_H	$0000\ 0000_H$

The registers are addressed wordwise.

13.8.1 Interrupt Node Enable Registers

Register IEN0 contains the global interrupt masking bit (EA), which can be cleared to block all pending interrupt requests at once.

The NMI interrupt vector is shared by a number of sources, each of which can be enabled or disabled individually via register NMICON.

After reset, the enable bits in IEN0, IEN1 and NMICON are cleared to 0. This implies that all interrupt nodes are disabled by default.

Interrupt Enable Register 0

SCU_IEN0	Offset	Reset Value
Interrupt Enable Register 0	$01C_H$	see Table 174

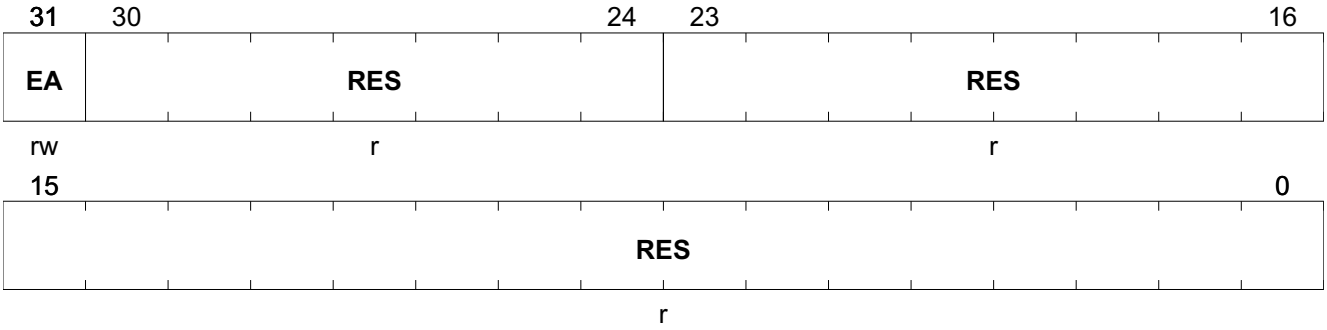

Field	Bits	Type	Description
EA	31	rw	**Global Interrupt Mask** 0_B All pending interrupt requests (except NMI) are blocked from the core. 1_B Pending interrupt requests are not blocked from the core.
RES	30:24	r	**Reserved** Returns 0 if read; should be written with 0.
RES	23:0	r	**Reserved** Returns 0 if read; should be written with 0.

Table 174 RESET of SCU_IEN0

Register Reset Type	Reset Values	Reset Short Name	Reset Mode	Note
RESET_TYPE_4	00000000_H	RESET_TYPE_4		

NMI Control Register

SCU_NMICON	Offset	Reset Value
NMI Control Register	024_H	see Table 175

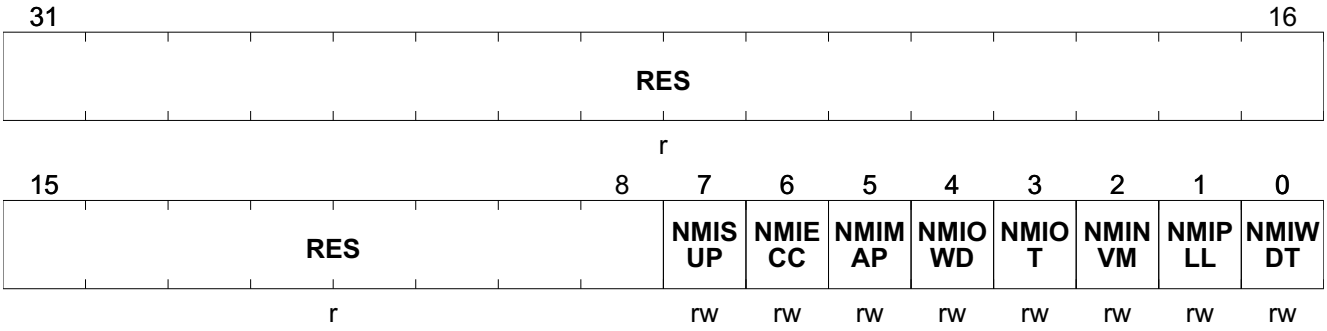

Field	Bits	Type	Description
RES	31:8	r	**Reserved** Returns 0 if read; should be written with 0.
NMISUP	7	rw	**Supply Prewarning NMI Enable** 0_B Supply NMI is disabled. 1_B Supply NMI is enabled.
NMIECC	6	rw	**ECC Error NMI Enable** 0_B ECC Error NMI is disabled. 1_B ECC Error NMI is enabled.
NMIMAP	5	rw	**NVM Map Error NMI Enable** 0_B NVM Map Error NMI is disabled. 1_B NVM Map Error NMI is enabled.
NMIOWD	4	rw	**Oscillator Watchdog NMI Enable** 0_B Oscillator watchdog NMI is disabled. 1_B Oscillator watchdog NMI is enabled.
NMIOT	3	rw	**NMI OT Enable** 0_B NMI OT is disabled. 1_B NMI OT is enabled.
NMINVM	2	rw	**NVM Operation Complete NMI Enable** 0_B NVM operation complete NMI is disabled. 1_B NVM operation complete NMI is enabled.
NMIPLL	1	rw	**PLL Loss of Lock NMI Enable** 0_B PLL Loss of Lock NMI is disabled. 1_B PLL Loss of Lock NMI is enabled.
NMIWDT	0	rw	**Watchdog Timer NMI Enable** 0_B WDT NMI is disabled. 1_B WDT NMI is enabled.

Table 175 RESET of SCU_NMICON

Register Reset Type	Reset Values	Reset Short Name	Reset Mode	Note
RESET_TYPE_3	00000000_H	RESET_TYPE_3		

13.8.2 External Interrupt Control Registers

The external interrupts, EXT_INT[1:0], are driven into the XC8_EPOWER from the ports. External interrupts can be positive, negative or double edge triggered. Register EXICON0 specifies the active edge for the external interrupt. Among the external interrupts, external interrupt 0 and external interrupt 1 can be selected to bypass edge detection in the SCU, for direct feed-through to the core. This signal to the core can be further programmed to either low-level or negative transition activated, by the bits IT0 and IT1 in the TCON register. However for edge detection in SCU, TCON.IT0/1 must be set to falling edge triggered. An active edge event detected in SCU will generate internally two CCLK cycle low pulse for detection by core.

If the external interrupt is positive (negative) edge triggered, the external source must hold the request pin low (high) for at least one CCLK cycle, and then hold it high (low) for at least one CCLK cycle to ensure that the transition is recognized. If edge detection is bypassed for external interrupt 0 and external interrupt 1, the external source must hold the request pin “high” or “low” for at least two CCLK cycles.

External interrupt 2 share the interrupt node with other interrupt sources. Therefore in addition to the corresponding interrupt node enable, external interrupt 2 may be disabled individually, and is disabled by default after reset.

Note: Several external interrupts support alternative input pin, selected via MODPISEL register in the SCU. When switching inputs, the active edge/level trigger select and the level on the associated pins should be considered to prevent unintentional interrupt generation.

External Interrupt Control Register 0

Control Functionality according **SCU_EXICON0**

Reset Values of **SCU_EXICON0** according **Table 176**

SCU_EXICON0	Offset	Reset Value
External Interrupt Control Register 0	**028_H**	**see Table 176**

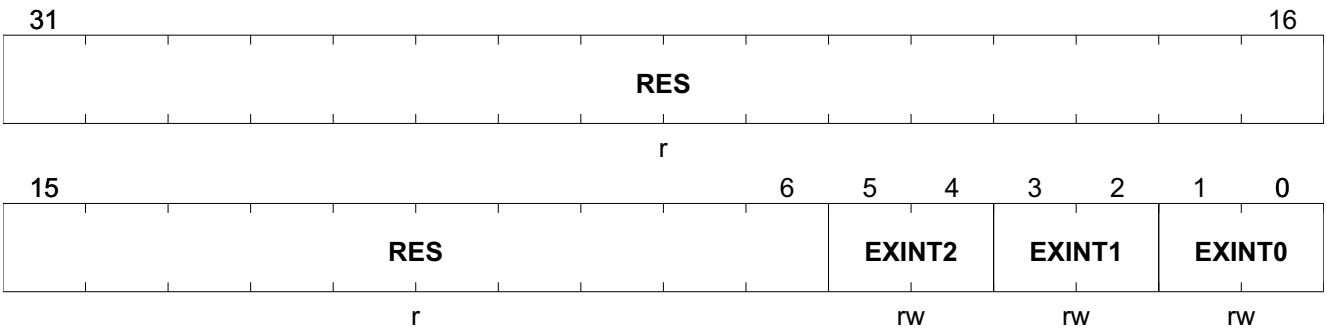

Field	Bits	Type	Description
RES	31:6	r	**Reserved** Returns 0 if read; should be written with 0.

Field	Bits	Type	Description
EXINT2	5:4	rw	**External Interrupt 2 Trigger Select** 00_B Interrupt on falling edge. 01_B Interrupt on rising edge. 10_B Interrupt on both rising and falling edge. 11_B Bypass the edge detection in SCU. The input signal directly feeds to the core.
EXINT1	3:2	rw	**External Interrupt 1 Trigger Select** 00_B Interrupt on falling edge. 01_B Interrupt on rising edge. 10_B Interrupt on both rising and falling edge. 11_B Bypass the edge detection in SCU. The input signal directly feeds to the core.
EXINT0	1:0	rw	**External Interrupt 0 Trigger Select** 00_B Interrupt on falling edge. 01_B Interrupt on rising edge. 10_B Interrupt on both rising and falling edge. 11_B Bypass the edge detection in SCU. The input signal directly feeds to the core.

Table 176 RESET of SCU_EXICON0

Register Reset Type	Reset Values	Reset Short Name	Reset Mode	Note
RESET_TYPE_3	0000 0030_H	RESET_TYPE_3		

External Interrupt Control Register 1

Control Functionality according **SCU_EXICON1**

Reset Values of **SCU_EXICON1** according **Table 177**

SCU_EXICON1	Offset	Reset Value
External Interrupt Control Register 1	**$02C_H$**	**see Table 177**

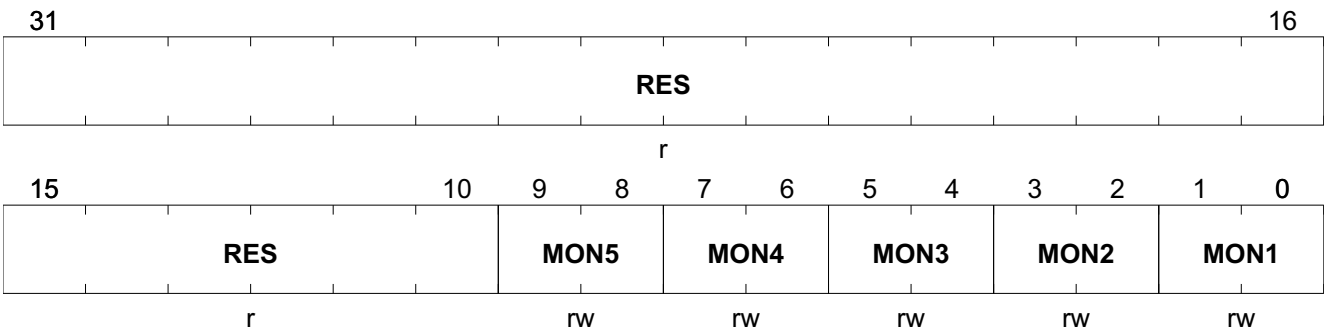

Field	Bits	Type	Description
RES	31:10	r	**Reserved** Returns 0 if read; should be written with 0.

Field	Bits	Type	Description
MON5	9:8	rw	**MON5 Input Trigger Select** 00_B external interrupt MON is disabled. 01_B Interrupt on rising edge. 10_B Interrupt on falling edge. 11_B Interrupt on both rising and falling edge.
MON4	7:6	rw	**MON4 Input Trigger Select** 00_B external interrupt MON is disabled. 01_B Interrupt on rising edge. 10_B Interrupt on falling edge. 11_B Interrupt on both rising and falling edge.
MON3	5:4	rw	**MON3 Input Trigger Select** 00_B external interrupt MON is disabled. 01_B Interrupt on rising edge. 10_B Interrupt on falling edge. 11_B Interrupt on both rising and falling edge.
MON2	3:2	rw	**MON2 Input Trigger Select** 00_B external interrupt MON is disabled. 01_B Interrupt on rising edge. 10_B Interrupt on falling edge. 11_B Interrupt on both rising and falling edge.
MON1	1:0	rw	**MON1 Input Trigger Select** 00_B external interrupt MON is disabled. 01_B Interrupt on rising edge. 10_B Interrupt on falling edge. 11_B Interrupt on both rising and falling edge.

Table 177 RESET of SCU_EXICON1

Register Reset Type	Reset Values	Reset Short Name	Reset Mode	Note
RESET_TYPE_3	0000 0030_H	RESET_TYPE_3		

Wakeup Interrupt Control Register

Control Functionality according **SCU_WAKECON**

Reset values of **SCU_WAKECON** according **Table 177**

SCU_WAKECON	Offset	Reset Value
Wakeup Interrupt Control Register	**078_H**	**see Table 178**

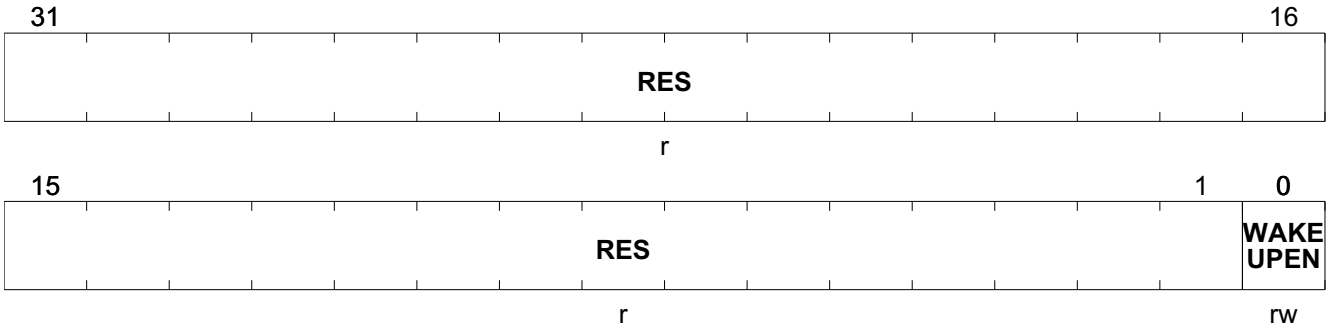

Field	Bits	Type	Description
RES	31:1	r	**Reserved** Returns 0 if read; should be written with 0.
WAKEUPEN	0	rw	**Wakeup Interrupt Enable** 0_B wakeup interrupt is disabled. 1_B wakeup interrupt is enabled.

Table 178 RESET of SCU_WAKECON

Register Reset Type	Reset Values	Reset Short Name	Reset Mode	Note
RESET_TYPE_3	0000 0000_H	RESET_TYPE_3		

13.8.3 Interrupt Flag Registers

The interrupt flags for the different interrupt sources are located in several special function registers. This section describes the interrupt flags located in system registers or external interrupts belonging to system. Other interrupt flags located in respective module registers are described in the specific module chapter. For a complete listing of the interrupt flags and their assignment to SFRs, refer to **Table 167**.

In case of software and hardware access to a flag bit at the same time, hardware will have higher priority.

Interrupt Request Register 0

SCU_IRCON0	Offset	Reset Value
Interrupt Request Register 0	004_H	see Table 179

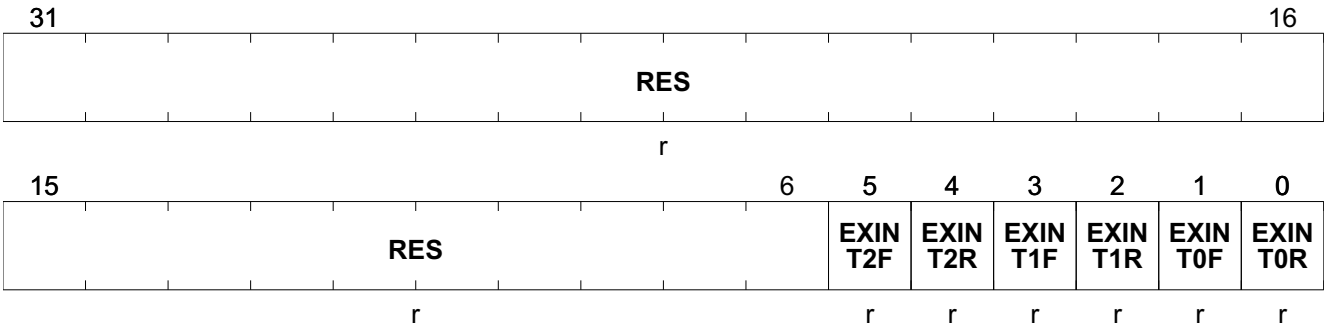

Field	Bits	Type	Description
RES	31:6	r	**Reserved** Returns 0 if read; should be written with 0.
EXINT2F	5	r	**Interrupt Flag for External Interrupt 2x on falling edge** This bit is set by hardware and can only be cleared by software. 0_B Interrupt on falling edge event has not occurred. 1_B Interrupt on falling edge event has occurred.
EXINT2R	4	r	**Interrupt Flag for External Interrupt 2x on rising edge** This bit is set by hardware and can only be cleared by software. 0_B Interrupt on rising edge event has not occurred. 1_B Interrupt on rising edge event has occurred.
EXINT1F	3	r	**Interrupt Flag for External Interrupt 1x on falling edge** This bit is set by hardware and can only be cleared by software. 0_B Interrupt on falling edge event has not occurred. 1_B Interrupt on falling edge event has occurred.
EXINT1R	2	r	**Interrupt Flag for External Interrupt 1x on rising edge** This bit is set by hardware and can only be cleared by software. 0_B Interrupt on rising edge event has not occurred. 1_B Interrupt on rising edge event has occurred.

Field	Bits	Type	Description
EXINT0F	1	r	**Interrupt Flag for External Interrupt 0x on falling edge** This bit is set by hardware and can only be cleared by software. 0_B Interrupt on falling edge event has not occurred. 1_B Interrupt on falling edge event has occurred.
EXINT0R	0	r	**Interrupt Flag for External Interrupt 0x on rising edge** This bit is set by hardware and can only be cleared by software. 0_B Interrupt on rising edge event has not occurred. 1_B Interrupt on rising edge event has occurred.

Table 179 RESET of SCU_IRCON0

Register Reset Type	Reset Values	Reset Short Name	Reset Mode	Note
RESET_TYPE_3	$0000\ 0000_H$	RESET_TYPE_3		

Interrupt Request 0 Clear Register

SCU_IRCON0CLR	Offset	Reset Value
Interrupt Request 0 Clear Register	178_H	see Table 180

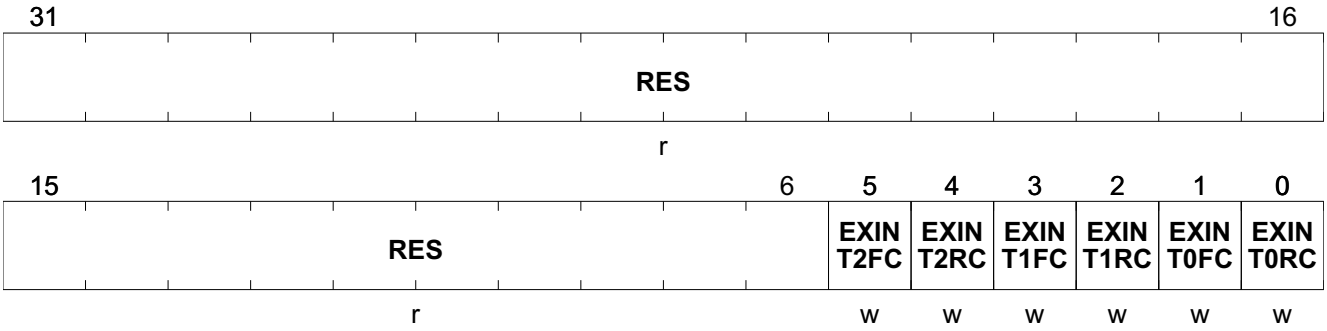

Field	Bits	Type	Description
RES	31:6	r	**Reserved** Returns 0 if read; should be written with 0.
EXINT2FC	5	w	**Interrupt Flag for External Interrupt 2x on falling edge** This bit is set by hardware and can only be cleared by software. 0_B Interrupt event is not cleared. 1_B Interrupt event is cleared
EXINT2RC	4	w	**Interrupt Flag for External Interrupt 2x on rising edge** This bit is set by hardware and can only be cleared by software. 0_B Interrupt event is not cleared. 1_B Interrupt event is cleared

Field	Bits	Type	Description
EXINT1FC	3	w	**Interrupt Flag for External Interrupt 1x on falling edge** This bit is set by hardware and can only be cleared by software. 0_B Interrupt event is not cleared. 1_B Interrupt event is cleared
EXINT1RC	2	w	**Interrupt Flag for External Interrupt 1x on rising edge** This bit is set by hardware and can only be cleared by software. 0_B Interrupt event is not cleared. 1_B Interrupt event is cleared
EXINT0FC	1	w	**Interrupt Flag for External Interrupt 0x on falling edge** This bit is set by hardware and can only be cleared by software. 0_B Interrupt event is not cleared. 1_B Interrupt event is cleared
EXINT0RC	0	w	**Interrupt Flag for External Interrupt 0x on rising edge** This bit is set by hardware and can only be cleared by software. 0_B Interrupt event is not cleared. 1_B Interrupt event is cleared

Table 180 RESET of SCU_IRCON0CLR

Register Reset Type	Reset Values	Reset Short Name	Reset Mode	Note
RESET_TYPE_3	0000 0000_H	RESET_TYPE_3		

Interrupt Request Register 1

SCU_IRCON1	Offset	Reset Value
Interrupt Request Register 1	008_H	see Table 181

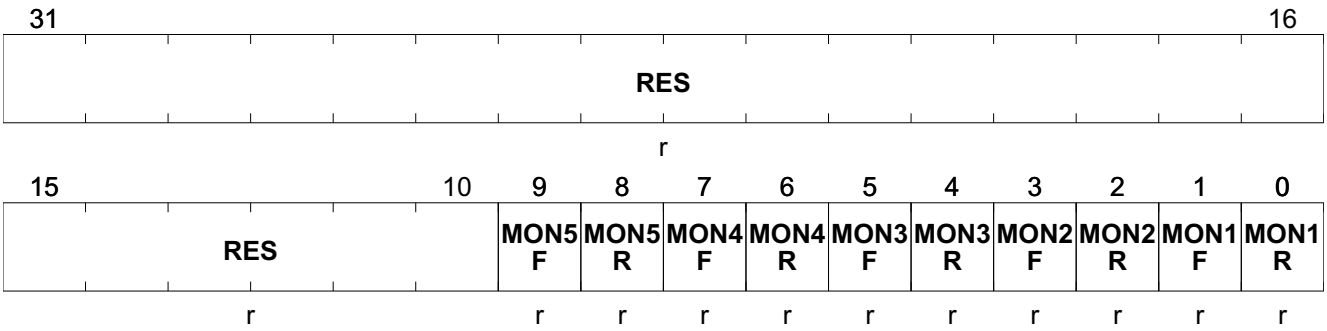

Field	Bits	Type	Description
RES	31:10	r	**Reserved** Returns 0 if read; should be written with 0.

Field	Bits	Type	Description
MON5F	9	r	**Interrupt Flag for MON5x on falling edge** This bit is set by hardware and can only be cleared by software. 0_B Interrupt on falling edge event has not occurred. 1_B Interrupt on falling edge event has occurred.
MON5R	8	r	**Interrupt Flag for MON5x on rising edge** This bit is set by hardware and can only be cleared by software. 0_B Interrupt on rising edge event has not occurred. 1_B Interrupt on rising edge event has occurred.
MON4F	7	r	**Interrupt Flag for MON4x on falling edge** This bit is set by hardware and can only be cleared by software. 0_B Interrupt on falling edge event has not occurred. 1_B Interrupt on falling edge event has occurred.
MON4R	6	r	**Interrupt Flag for MON4x on rising edge** This bit is set by hardware and can only be cleared by software. 0_B Interrupt on rising edge event has not occurred. 1_B Interrupt on rising edge event has occurred.
MON3F	5	r	**Interrupt Flag for MON3x on falling edge** This bit is set by hardware and can only be cleared by software. 0_B Interrupt on falling edge event has not occurred. 1_B Interrupt on falling edge event has occurred.
MON3R	4	r	**Interrupt Flag for MON3x on rising edge** This bit is set by hardware and can only be cleared by software. 0_B Interrupt on rising edge event has not occurred. 1_B Interrupt on rising edge event has occurred.
MON2F	3	r	**Interrupt Flag for MON2x on falling edge** This bit is set by hardware and can only be cleared by software. 0_B Interrupt on falling edge event has not occurred. 1_B Interrupt on falling edge event has occurred.
MON2R	2	r	**Interrupt Flag for MON2x on rising edge** This bit is set by hardware and can only be cleared by software. 0_B Interrupt on rising edge event has not occurred. 1_B Interrupt on rising edge event has occurred.
MON1F	1	r	**Interrupt Flag for MON1x on falling edge** This bit is set by hardware and can only be cleared by software. 0_B Interrupt on falling edge event has not occurred. 1_B Interrupt on falling edge event has occurred.

Field	Bits	Type	Description
MON1R	0	r	**Interrupt Flag for MON1x on rising edge** This bit is set by hardware and can only be cleared by software. 0_B Interrupt on rising edge event has not occurred. 1_B Interrupt on rising edge event has occurred.

Table 181 RESET of SCU_IRCON1

Register Reset Type	Reset Values	Reset Short Name	Reset Mode	Note
RESET_TYPE_3	$0000\ 0000_H$	RESET_TYPE_3		

Interrupt Request 1 Clear Register

SCU_IRCON1CLR	Offset	Reset Value
Interrupt Request 1 Clear Register	$17C_H$	see Table 182

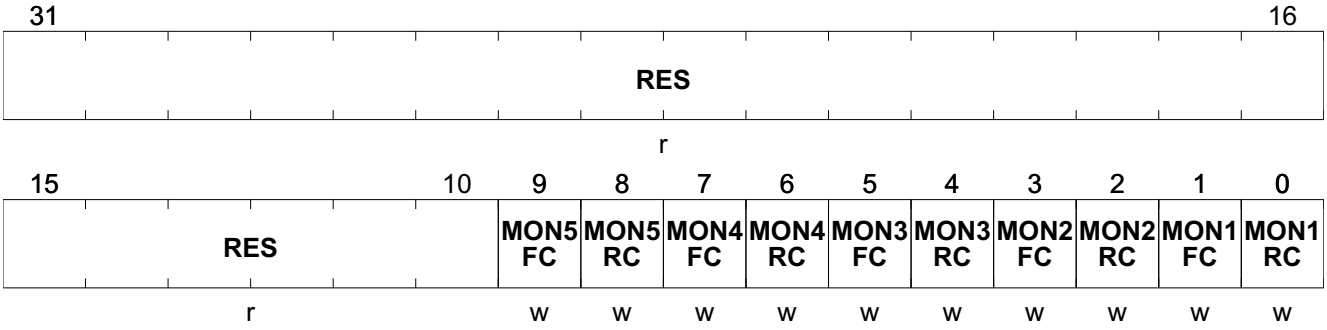

Field	Bits	Type	Description
RES	31:10	r	**Reserved** Returns 0 if read; should be written with 0.
MON5FC	9	w	**Interrupt Flag for MON5x on falling edge** This bit is set by hardware and can only be cleared by software. 0_B Interrupt event is not cleared. 1_B Interrupt event is cleared
MON5RC	8	w	**Interrupt Flag for MON5x on rising edge** This bit is set by hardware and can only be cleared by software. 0_B Interrupt event is not cleared. 1_B Interrupt event is cleared.
MON4FC	7	w	**Interrupt Flag for MON4x on falling edge** This bit is set by hardware and can only be cleared by software. 0_B Interrupt event is not cleared. 1_B Interrupt event is cleared

Field	Bits	Type	Description
MON4RC	6	w	**Interrupt Flag for MON4x on rising edge** This bit is set by hardware and can only be cleared by software. 0_B Interrupt event is not cleared. 1_B Interrupt event is cleared.
MON3FC	5	w	**Interrupt Flag for MON3x on falling edge** This bit is set by hardware and can only be cleared by software. 0_B Interrupt event is not cleared. 1_B Interrupt event is cleared
MON3RC	4	w	**Interrupt Flag for MON3x on rising edge** This bit is set by hardware and can only be cleared by software. 0_B Interrupt event is not cleared. 1_B Interrupt event is cleared
MON2FC	3	w	**Interrupt Flag for MON2x on falling edge** This bit is set by hardware and can only be cleared by software. 0_B Interrupt event is not cleared. 1_B Interrupt event is cleared
MON2RC	2	w	**Interrupt Flag for MON2x on rising edge** This bit is set by hardware and can only be cleared by software. 0_B Interrupt event is not cleared. 1_B Interrupt event is cleared
MON1FC	1	w	**Interrupt Flag for MON1x on falling edge** This bit is set by hardware and can only be cleared by software. 0_B Interrupt event is not cleared. 1_B Interrupt event is cleared
MON1RC	0	w	**Interrupt Flag for MON1x on rising edge** This bit is set by hardware and can only be cleared by software. 0_B Interrupt event is not cleared. 1_B Interrupt event is cleared

Table 182 RESET of SCU_IRCON1CLR

Register Reset Type	Reset Values	Reset Short Name	Reset Mode	Note
RESET_TYPE_3	$0000\ 0000_H$	RESET_TYPE_3		

Interrupt Request Register 2

SCU_IRCON2	Offset	Reset Value
Interrupt Request Register 2	$00C_H$	see Table 183

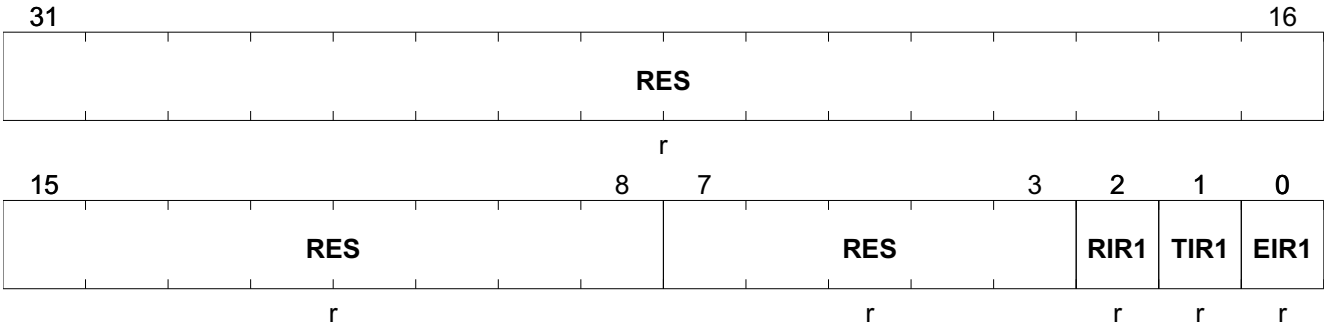

Field	Bits	Type	Description
RES	31:8	r	**Reserved** Returns 0 if read; should be written with 0.
RES	7:3	r	**Reserved** Returns 0 if read; should be written with 0.
RIR1	2	r	**Receive Interrupt Flag for SSC1** This bit is set by hardware and can only be cleared by software. 0_B Interrupt event has not occurred. 1_B Interrupt event has occurred.
TIR1	1	r	**Transmit Interrupt Flag for SSC1** This bit is set by hardware and can only be cleared by software. 0_B Interrupt event has not occurred. 1_B Interrupt event has occurred.
EIR1	0	r	**Error Interrupt Flag for SSC1** This bit is set by hardware and can only be cleared by software. 0_B Interrupt event has not occurred. 1_B Interrupt event has occurred.

Table 183 RESET of SCU_IRCON2

Register Reset Type	Reset Values	Reset Short Name	Reset Mode	Note
RESET_TYPE_3	$0000\ 0000_H$	RESET_TYPE_3		

Interrupt Request 2 Clear Register

SCU_IRCON2CLR	Offset	Reset Value
Interrupt Request 2 Clear Register	190_H	see Table 184

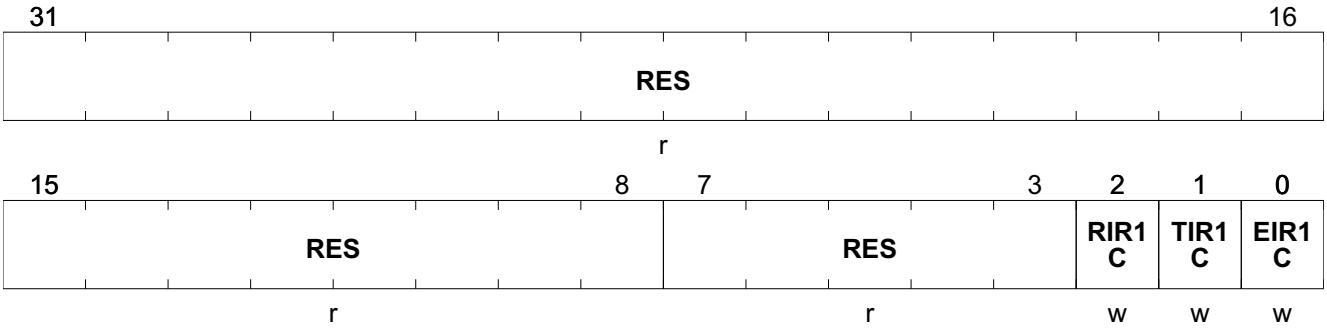

Field	Bits	Type	Description
RES	31:8	r	**Reserved** Returns 0 if read; should be written with 0.
RES	7:3	r	**Reserved** Returns 0 if read; should be written with 0.
RIR1C	2	w	**Receive Interrupt Flag for SSC1** This bit is set by hardware and can only be cleared by software. 0_B Interrupt event is not cleared. 1_B Interrupt event is cleared.
TIR1C	1	w	**Transmit Interrupt Flag for SSC1** This bit is set by hardware and can only be cleared by software. 0_B Interrupt event is not cleared. 1_B Interrupt event is cleared.
EIR1C	0	w	**Error Interrupt Flag for SSC1** This bit is set by hardware and can only be cleared by software. 0_B Interrupt event is not cleared. 1_B Interrupt event is cleared.

Table 184 RESET of SCU_IRCON2CLR

Register Reset Type	Reset Values	Reset Short Name	Reset Mode	Note
RESET_TYPE_3	$0000\ 0000_H$	RESET_TYPE_3		

Interrupt Request Register 3

SCU_IRCON3	Offset	Reset Value
Interrupt Request Register 3	010_H	see Table 185

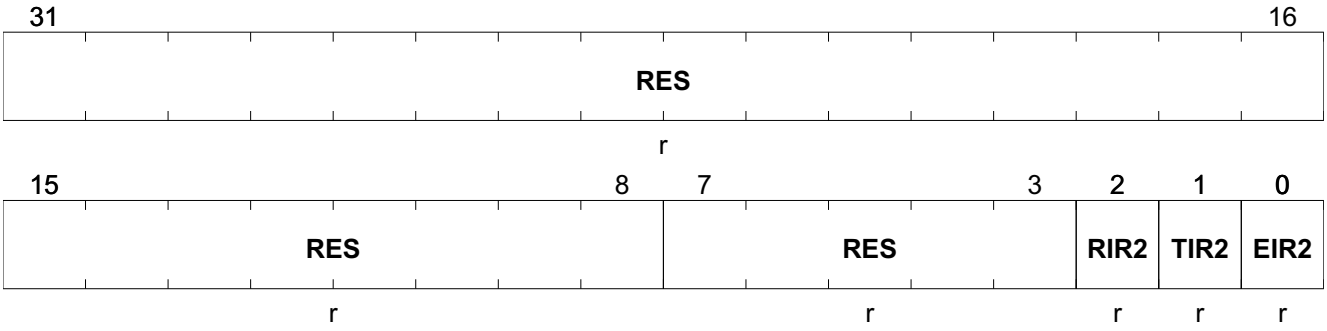

Field	Bits	Type	Description
RES	31:8	r	**Reserved** Returns 0 if read; should be written with 0.
RES	7:3	r	**Reserved** Returns 0 if read; should be written with 0.
RIR2	2	r	**Receive Interrupt Flag for SSC2** This bit is set by hardware and can only be cleared by software. 0_B Interrupt event has not occurred. 1_B Interrupt event has occurred.
TIR2	1	r	**Transmit Interrupt Flag for SSC2** This bit is set by hardware and can only be cleared by software. 0_B Interrupt event has not occurred. 1_B Interrupt event has occurred.
EIR2	0	r	**Error Interrupt Flag for SSC2** This bit is set by hardware and can only be cleared by software. 0_B Interrupt event has not occurred. 1_B Interrupt event has occurred.

Table 185 RESET of SCU_IRCON3

Register Reset Type	Reset Values	Reset Short Name	Reset Mode	Note
RESET_TYPE_3	$0000\ 0000_H$	RESET_TYPE_3		

Interrupt Request 3 Clear Register

SCU_IRCON3CLR	Offset	Reset Value
Interrupt Request 3 Clear Register	194_H	see Table 186

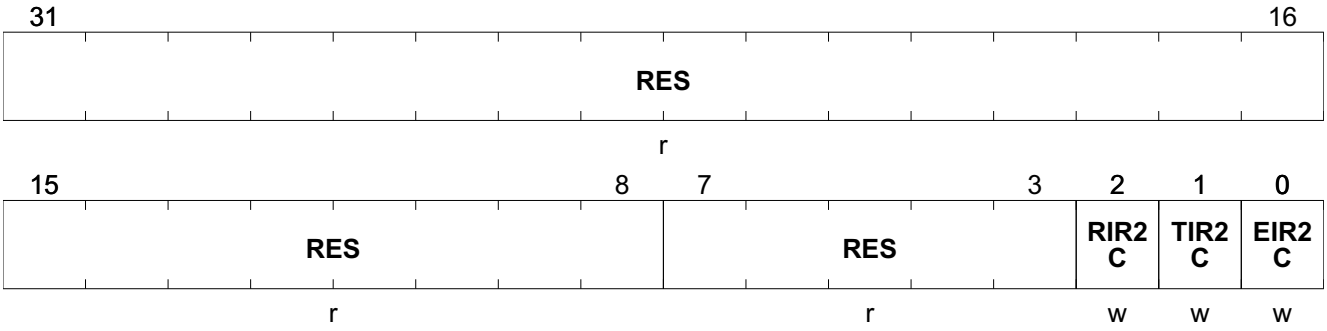

Field	Bits	Type	Description
RES	31:8	r	**Reserved** Returns 0 if read; should be written with 0.
RES	7:3	r	**Reserved** Returns 0 if read; should be written with 0.
RIR2C	2	w	**Receive Interrupt Flag for SSC2** This bit is set by hardware and can only be cleared by software. 0_B Interrupt event is not cleared. 1_B Interrupt event is cleared.
TIR2C	1	w	**Transmit Interrupt Flag for SSC2** This bit is set by hardware and can only be cleared by software. 0_B Interrupt event is not cleared. 1_B Interrupt event is cleared.
EIR2C	0	w	**Error Interrupt Flag for SSC2** This bit is set by hardware and can only be cleared by software. 0_B Interrupt event is not cleared. 1_B Interrupt event is cleared.

Table 186 RESET of SCU_IRCON3CLR

Register Reset Type	Reset Values	Reset Short Name	Reset Mode	Note
RESET_TYPE_3	$0000\ 0000_H$	RESET_TYPE_3		

Interrupt Request Register 4

SCU_IRCON4	Offset	Reset Value
Interrupt Request Register 4	014_H	see Table 187

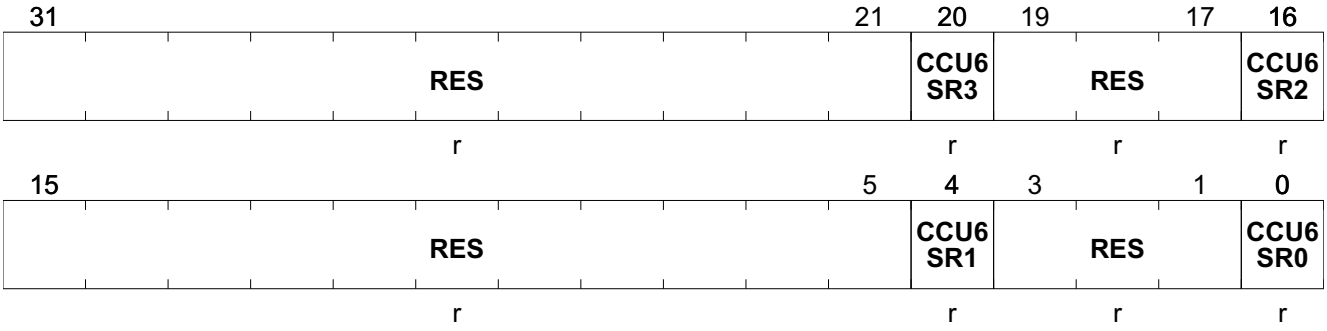

Field	Bits	Type	Description
RES	31:21	r	**Reserved** Returns 0 if read; should be written with 0.
CCU6SR3	20	r	**Interrupt Flag 1 for CCU6** This bit is set by hardware and can only be cleared by software. 0_B Interrupt event has not occurred. 1_B Interrupt event has occurred.
RES	19:17	r	**Reserved** Returns 0 if read; should be written with 0.
CCU6SR2	16	r	**Interrupt Flag 1 for CCU6** This bit is set by hardware and can only be cleared by software. 0_B Interrupt event has not occurred. 1_B Interrupt event has occurred.
RES	15:5	r	**Reserved** Returns 0 if read; should be written with 0.
CCU6SR1	4	r	**Interrupt Flag 1 for CCU6** This bit is set by hardware and can only be cleared by software. 0_B Interrupt event has not occurred. 1_B Interrupt event has occurred.
RES	3:1	r	**Reserved** Returns 0 if read; should be written with 0.
CCU6SR0	0	r	**Interrupt Flag 1 for CCU6** This bit is set by hardware and can only be cleared by software. 0_B Interrupt event has not occurred. 1_B Interrupt event has occurred.

Table 187 RESET of SCU_IRCON4

Register Reset Type	Reset Values	Reset Short Name	Reset Mode	Note
RESET_TYPE_3	$0000\ 0000_H$	RESET_TYPE_3		

Interrupt Request 4 Clear Register

SCU_IRCON4CLR	Offset	Reset Value
Interrupt Request 4 Clear Register	198_H	see Table 188

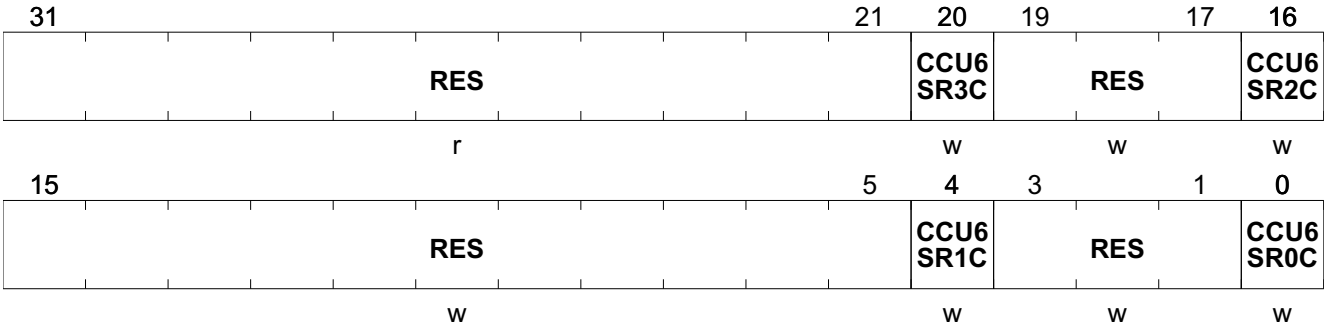

Field	Bits	Type	Description
RES	31:21	r	**Reserved** Returns 0 if read; should be written with 0.
CCU6SR3C	20	w	**Interrupt Flag 1 for CCU6** This bit is set by hardware and can only be cleared by software. 0_B Interrupt event is not cleared 1_B Interrupt event is cleared
RES	19:17	w	**Reserved** Returns 0 if read; should be written with 0.
CCU6SR2C	16	w	**Interrupt Flag 1 for CCU6** This bit is set by hardware and can only be cleared by software. 0_B Interrupt event is not cleared 1_B Interrupt event is cleared
RES	15:5	w	**Reserved** Returns 0 if read; should be written with 0.
CCU6SR1C	4	w	**Interrupt Flag 1 for CCU6** This bit is set by hardware and can only be cleared by software. 0_B Interrupt event is not cleared 1_B Interrupt event is cleared
RES	3:1	w	**Reserved** Returns 0 if read; should be written with 0.
CCU6SR0C	0	w	**Interrupt Flag 1 for CCU6** This bit is set by hardware and can only be cleared by software. 0_B Interrupt event is not cleared 1_B Interrupt event is cleared

Table 188 RESET of SCU_IRCON4CLR

Register Reset Type	Reset Values	Reset Short Name	Reset Mode	Note
RESET_TYPE_3	$0000\ 0000_H$	RESET_TYPE_3		

Interrupt Request Register 5

SCU_IRCON5	Offset	Reset Value
Interrupt Request Register 5	$07C_H$	see Table 189

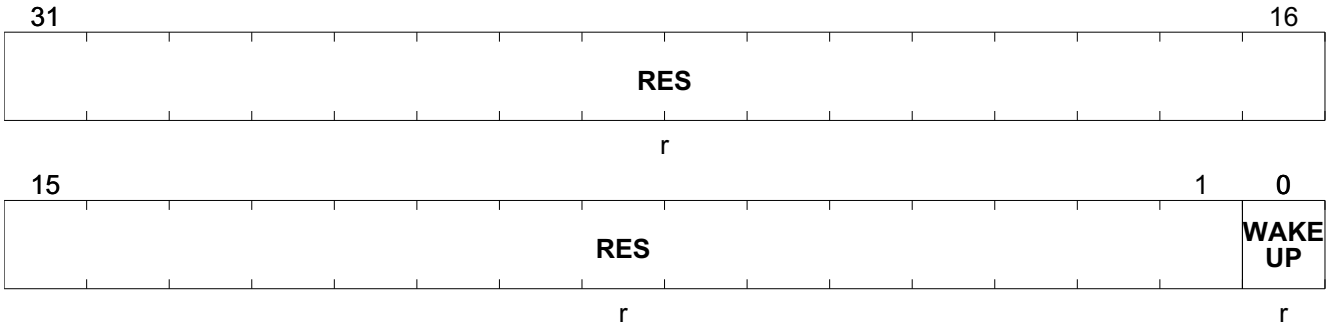

Field	Bits	Type	Description
RES	31:1	r	**Reserved** Returns 0 if read; should be written with 0.
WAKEUP	0	r	**Interrupt Flag for Wakeup** This bit is set by hardware and can only be cleared by software. 0_B Interrupt event has not occurred. 1_B Interrupt event has occurred.

Table 189 RESET of SCU_IRCON5

Register Reset Type	Reset Values	Reset Short Name	Reset Mode	Note
RESET_TYPE_3	$0000\ 0000_H$	RESET_TYPE_3		

Interrupt Request 5 Clear Register

SCU_IRCON5CLR	Offset	Reset Value
Interrupt Request 5 Clear Register	$19C_H$	see Table 190

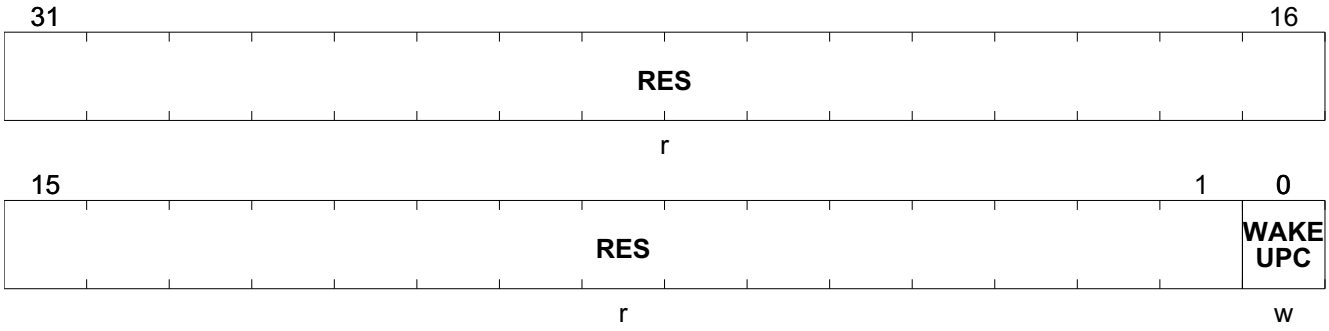

Field	Bits	Type	Description
RES	31:1	r	**Reserved** Returns 0 if read; should be written with 0.
WAKEUPC	0	w	**Clear Flag for Wakeup Interrupt** This bit is set by hardware and can only be cleared by software. 0_B Interrupt event is not cleared 1_B Interrupt event is cleared

Table 190 RESET of SCU_IRCON5CLR

Register Reset Type	Reset Values	Reset Short Name	Reset Mode	Note
RESET_TYPE_3	$0000\ 0000_H$	RESET_TYPE_3		

Timer and Counter Control/Status Register

SCU_GPT12IRC	Offset	Reset Value
Timer and Counter Control/Status Register	160_H	see Table 191

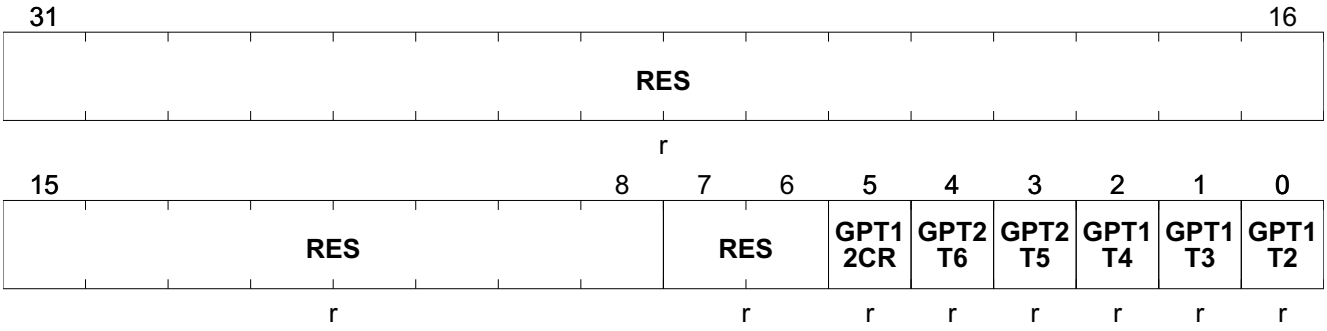

Field	Bits	Type	Description
RES	31:8	r	**Reserved** Returns 0 if read; should be written with 0.
RES	7:6	r	**Reserved** Returns 0 if read; should be written with 0.
GPT12CR	5	r	**GPT Module 1 Capture Reload Interrupt Status** Capture Reload Event of GPT1 Module Interrupt Status 0_B No Capture Reload Interrupt has occurred. 1_B Capture Reload Interrupt has occurred.
GPT2T6	4	r	**GPT Module 2Timer6 Interrupt Status** Timer 6 of GPT Module Interrupt Status 0_B No Timer 6 Interrupt has occurred. 1_B Timer 6 Interrupt has occurred.
GPT2T5	3	r	**GPT Module 2 Timer5 Interrupt Status** Timer 5 of GPT2 Module Interrupt Status 0_B No Timer 5 Interrupt has occurred. 1_B Timer 5 Interrupt has occurred.
GPT1T4	2	r	**GPT Module 1 Timer4 Interrupt Status** Timer 4 of GPT1 Module Interrupt Status 0_B No Timer 4 Interrupt has occurred. 1_B Timer 4 Interrupt has occurred.
GPT1T3	1	r	**GPT Module 1 Timer3 Interrupt Status** Timer 3 of GPT1 Module Interrupt Status 0_B No Timer 3 Interrupt has occurred. 1_B Timer 3 Interrupt has occurred.
GPT1T2	0	r	**GPT Module 1 Timer 2 Interrupt Status** Timer 2 of GPT1 Module Interrupt Status 0_B No Timer 2 Interrupt has occurred. 1_B Timer 2 Interrupt has occurred.

Table 191 RESET of SCU_GPT12IRC

Register Reset Type	Reset Values	Reset Short Name	Reset Mode	Note
RESET_TYPE_3	$0000\ 0000_H$	RESET_TYPE_3		

Timer and Counter Control/Status Register

SCU_GPT12ICLR	Offset	Reset Value
Timer and Counter Control/Status Clear Register	180_H	see Table 192

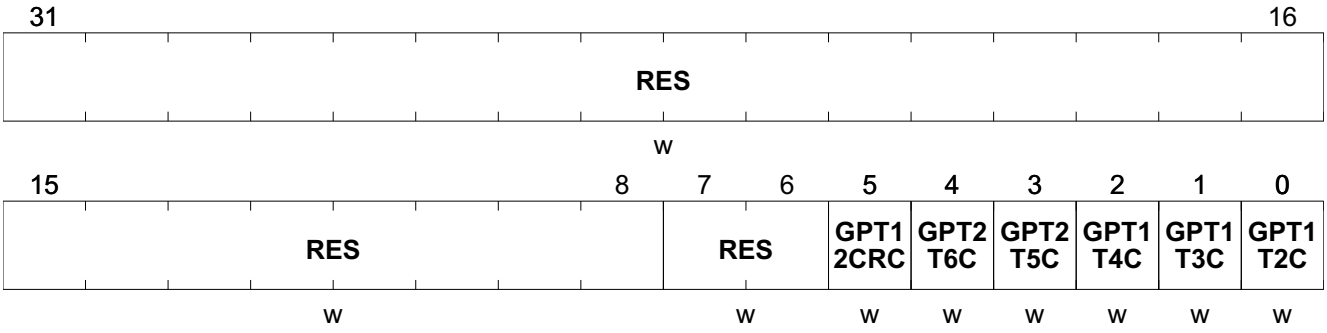

Field	Bits	Type	Description
RES	31:8	w	**Reserved** Returns 0 if read; should be written with 0.
RES	7:6	w	**Reserved** Returns 0 if read; should be written with 0.
GPT12CRC	5	w	**GPT Module 1 Capture Reload Interrupt Status** Capture Reload Event of GPT1 Module Interrupt Status 0_B Interrupt event is not cleared 1_B Interrupt event is cleared
GPT2T6C	4	w	**GPT Module 2 Timer6 Interrupt Status** Timer 6 of GPT Module Interrupt Status 0_B Interrupt event is not cleared 1_B Interrupt event is cleared
GPT2T5C	3	w	**GPT Module 2 Timer5 Interrupt Status** Timer 5 of GPT2 Module Interrupt Status 0_B Interrupt event is not cleared 1_B Interrupt event is cleared
GPT1T4C	2	w	**GPT Module 1 Timer4 Interrupt Status** Timer 4 of GPT1 Module Interrupt Status 0_B Interrupt event is not cleared 1_B Interrupt event is cleared
GPT1T3C	1	w	**GPT Module 1 Timer3 Interrupt Status** Timer 3 of GPT1 Module Interrupt Status 0_B Interrupt event is not cleared 1_B Interrupt event is cleared
GPT1T2C	0	w	**GPT Module 1 Timer 2 Interrupt Status** Timer 2 of GPT1 Module Interrupt Status 0_B Interrupt event is not cleared 1_B Interrupt event is cleared

Table 192 RESET of SCU_GPT12ICLR

Register Reset Type	Reset Values	Reset Short Name	Reset Mode	Note
RESET_TYPE_3	$0000\ 0000_H$	RESET_TYPE_3		

UART1 Control/Status Register

Refer to Register **UART_SCON** in **Chapter 19**.

SCU_SCON1	Offset	Reset Value
UART1 Control/Status Register	xxx_H	see Table 193

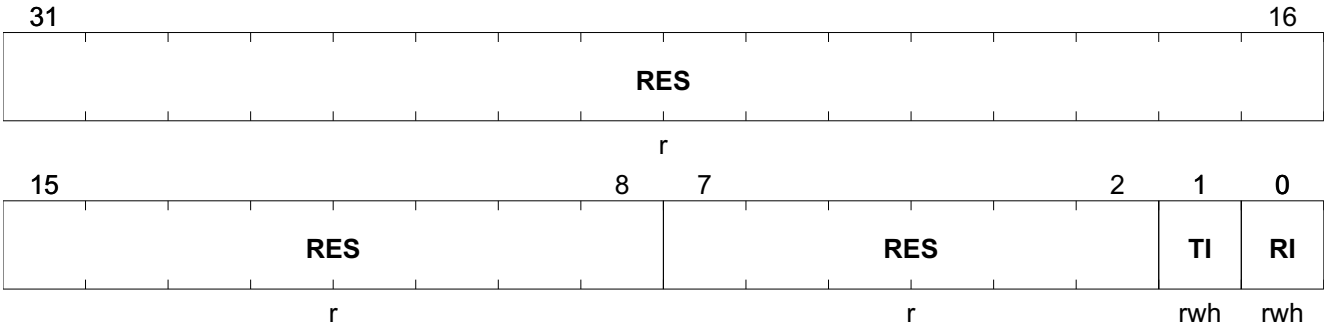

Field	Bits	Type	Description
RES	31:8	r	**Reserved** Returns 0 if read; should be written with 0.
RES	7:2	r	**Reserved** Returns 0 if read; should be written with 0.
TI	1	rwh	**Serial Interface Transmitter Interrupt Flag** Set by hardware at the end of a serial data transmission. Must be cleared by software.
RI	0	rwh	**Serial Interface Receiver Interrupt Flag** Set by hardware if a serial data byte has been received. Must be cleared by software.

Table 193 RESET of SCU_SCON1

Register Reset Type	Reset Values	Reset Short Name	Reset Mode	Note
RESET_TYPE_3	00000000_H	RESET_TYPE_3		

UART2 Control/Status Register

Refer to Register **UART_SCON** in **Chapter 19**.

SCU_SCON2	Offset	Reset Value
UART2 Control/Status Register	xxx_H	see Table 194

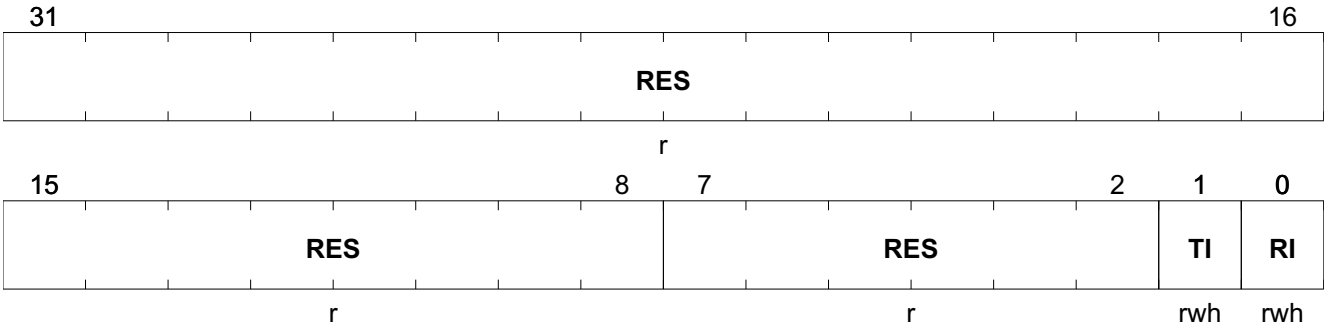

Field	Bits	Type	Description
RES	31:8	r	**Reserved** Returns 0 if read; should be written with 0.
RES	7:2	r	**Reserved** Returns 0 if read; should be written with 0.
TI	1	rwh	**Serial Interface Transmitter Interrupt Flag** Set by hardware at the end of a serial data transmission. Must be cleared by software.
RI	0	rwh	**Serial Interface Receiver Interrupt Flag** Set by hardware if a serial data byte has been received. Must be cleared by software.

Table 194 RESET of SCU_SCON2

Register Reset Type	Reset Values	Reset Short Name	Reset Mode	Note
RESET_TYPE_3	00000000_H	RESET_TYPE_3		

NMI Status Register

Each NMI event and status flag is retained across these resets: 1) WDT reset, 2) soft reset. These include all the flags of NMISR register: FNMIWDT, FNMIPLL, FNMINVM, FNMIOCDS, FNMIOWD, FNMIMAP, and indirectly, FNMIECC and FNMISUP. In the case of NMIs with shared source i.e. watchdog, ECC or supply prewarning NMI, the respective indicator or event flags not located in NMISR are also retained. Refer to Chapter 1.6.5 for identifying the NMI event.

SCU_NMISR	Offset	Reset Value
NMI Status Register	018_H	see Table 195

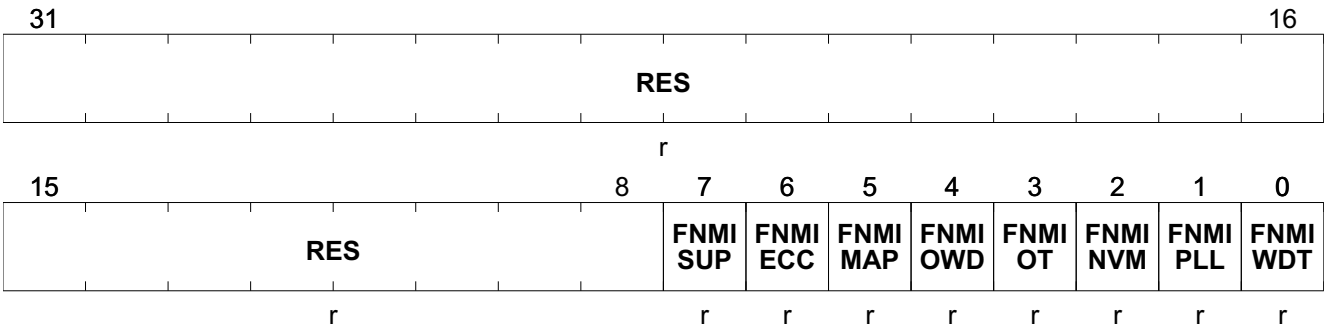

Field	Bits	Type	Description
RES	31:8	r	**Reserved** Returns 0 if read; should be written with 0.
FNMISUP	7	r	**Supply Prewarning NMI Flag** This flag is cleared automatically by hardware when the corresponding event flags are cleared. 0_B No supply prewarning NMI has occurred. 1_B Supply prewarning has occurred.
FNMIECC	6	r	**ECC Error NMI Flag** This flag is cleared automatically by hardware when the corresponding enabled event flags are cleared. 0_B No uncorrectable ECC error has occurred on NVM, XRAM. 1_B Uncorrectable ECC error has occurred on NVM, RAM.
FNMIMAP	5	r	**NVM Map Error NMI Flag** This bit is set by hardware and can only be cleared by software. 0_B No NVM Map Error NMI has occurred. 1_B NVM Map Error has occurred.
FNMIOWD	4	r	**Oscillator Watchdog NMI Flag** This bit is set by hardware and can only be cleared by software. 0_B No oscillator watchdog NMI has occurred. 1_B Oscillator watchdog event has occurred.

Field	Bits	Type	Description
FNMIOT	3	r	**Overtemperature NMI Flag** This bit is set by hardware and can only be cleared by software. As this is a shared NMI source, this flag should be cleared after checking and clearing the corresponding event flags. 0_B No OT NMI has occurred. 1_B OT NMI event has occurred.
FNMINVM	2	r	**NVM Operation Complete NMI Flag** This bit is set by hardware and can only be cleared by software. 0_B No NVM NMI has occurred. 1_B NVM operation complete event has occurred.
FNMIPLL	1	r	**PLL NMI Flag** This bit is set by hardware and can only be cleared by software. 0_B No PLL NMI has occurred. 1_B PLL loss-of-lock to the external crystal has occurred.
FNMIWDT	0	r	**Watchdog Timer NMI Flag** This bit is set by hardware and can only be cleared by software. As this is a shared NMI source, this flag should be cleared after checking and clearing the corresponding event flags. 0_B No watchdog NMI has occurred. 1_B WDT prewarning has occurred.

Table 195 RESET of SCU_NMISR

Register Reset Type	Reset Values	Reset Short Name	Reset Mode	Note
RESET_TYPE_3	$0000\ 0000_H$	RESET_TYPE_3		

NMI Status Register

Each NMI event and status flag is retained across these resets: 1) WDT reset, 2) soft reset. These include all the flags of NMISR register: FNMIWDT, FNMIPLL, FNMINVM, FNMIOCDS, FNMIOWD, FNMIMAP, and indirectly, FNMIECC and FNMISUP. In the case of NMIs with shared source i.e. watchdog, ECC or supply prewarning NMI, the respective indicator or event flags not located in NMISR are also retained. Refer to Chapter 1.6.5 for identifying the NMI event.

SCU_NMISRCLR	Offset	Reset Value
NMI Status Clear Register	000_H	see Table 196

31	30	29	28	27	26	25	24	23	22	21	20	19	18	17	16
RES															
r															

15	14	13	12	11	10	9	8	7	6	5	4	3	2	1	0
RES								FNMI SUPC	FNMI ECCC	FNMI MAPC	FNMI OWDC	FNMI OTC	FNMI NVMC	FNMI PLLC	FNMI WDTC
r								w	w	w	w	w	w	w	w

Field	Bits	Type	Description
RES	31:8	r	**Reserved** Returns 0 if read; should be written with 0.
FNMISUPC	7	w	**Supply Prewarning NMI Flag** This flag is cleared automatically by hardware when the corresponding event flags are cleared. *Note: this bit has no effect on the FNMISUP. The flag FNMISUP is a combination of all supply related flags. Those can be cleared by the corresponding bits in the SCU_PM module.* 0_B Interrupt event is not cleared 1_B Interrupt event is cleared
FNMIECCC	6	w	**ECC Error NMI Flag** This flag is cleared automatically by hardware when the corresponding enabled event flags are cleared. 0_B Interrupt event is not cleared 1_B Interrupt event is cleared
FNMIMAPC	5	w	**NVM Map Error NMI Flag** This bit is set by hardware and can only be cleared by software. 0_B Interrupt event is not cleared 1_B Interrupt event is cleared

Field	Bits	Type	Description
FNMIOWDC	4	w	**Oscillator Watchdog NMI Flag** This bit is set by hardware and can only be cleared by software. 0_B Interrupt event is not cleared 1_B Interrupt event is cleared
FNMIOTC	3	w	**Overtemperature NMI Flag** This bit is set by hardware and can only be cleared by software. As this is a shared NMI source, this flag should be cleared after checking and clearing the corresponding event flags. 0_B Interrupt event is not cleared 1_B Interrupt event is cleared
FNMINVMC	2	w	**NVM Operation Complete NMI Flag** This bit is set by hardware and can only be cleared by software. 0_B Interrupt event is not cleared 1_B Interrupt event is cleared
FNMIPLLC	1	w	**PLL NMI Flag** This bit is set by hardware and can only be cleared by software. 0_B Interrupt event is not cleared 1_B Interrupt event is cleared
FNMIWDTC	0	w	**Watchdog Timer NMI Flag** This bit is set by hardware and can only be cleared by software. As this is a shared NMI source, this flag should be cleared after checking and clearing the corresponding event flags. 0_B Interrupt event is not cleared 1_B Interrupt event is cleared

Table 196 RESET of SCU_NMISRCLR

Register Reset Type	Reset Values	Reset Short Name	Reset Mode	Note
RESET_TYPE_3	$0000\ 0000_H$	RESET_TYPE_3		

13.9 Interrupt Priority Registers

Each interrupt node can be individually programmed to one of the 16 priority levels available. The user can set them in the corresponding **NVIC_IPRx** Register (see Core Chapter).

14 Watchdog Timer (WDT1)

14.1 Features

In Active Mode, the WDT1 acts as a windowed watchdog timer, which provides a highly reliable and safe way to recover from software or hardware failures.

The WDT1 is always enabled in Active Mode. In Sleep Mode, Stop Mode and Debug Mode the WDT1 is disabled.

Functional Features

- Watchdog Timer is operating with a from the system clock (f_{SYS}) independent clock source (f_{LP_CLK})
- Windowed Watchdog Timer with programmable timing (16, 32, 48, …, 1008ms period) in Active Mode
- Long open window (200 ms) after power-up, reset, wake-up
- Short open window (30 ms) to facilitate Flash programming
- System safety shutdown to Sleep Mode after 5 missed WDT1 services (see **Chapter 6.4.1.2**)
- Watchdog is disabled in Debug Mode
- Watchdog cannot be deactivated in Normal Mode
- Watchdog reset is stored in reset status register **PMU_RESET_STS**

14.2 Introduction

The behavior of the Watchdog Timer in Active Mode is depicted in **Figure 74**.

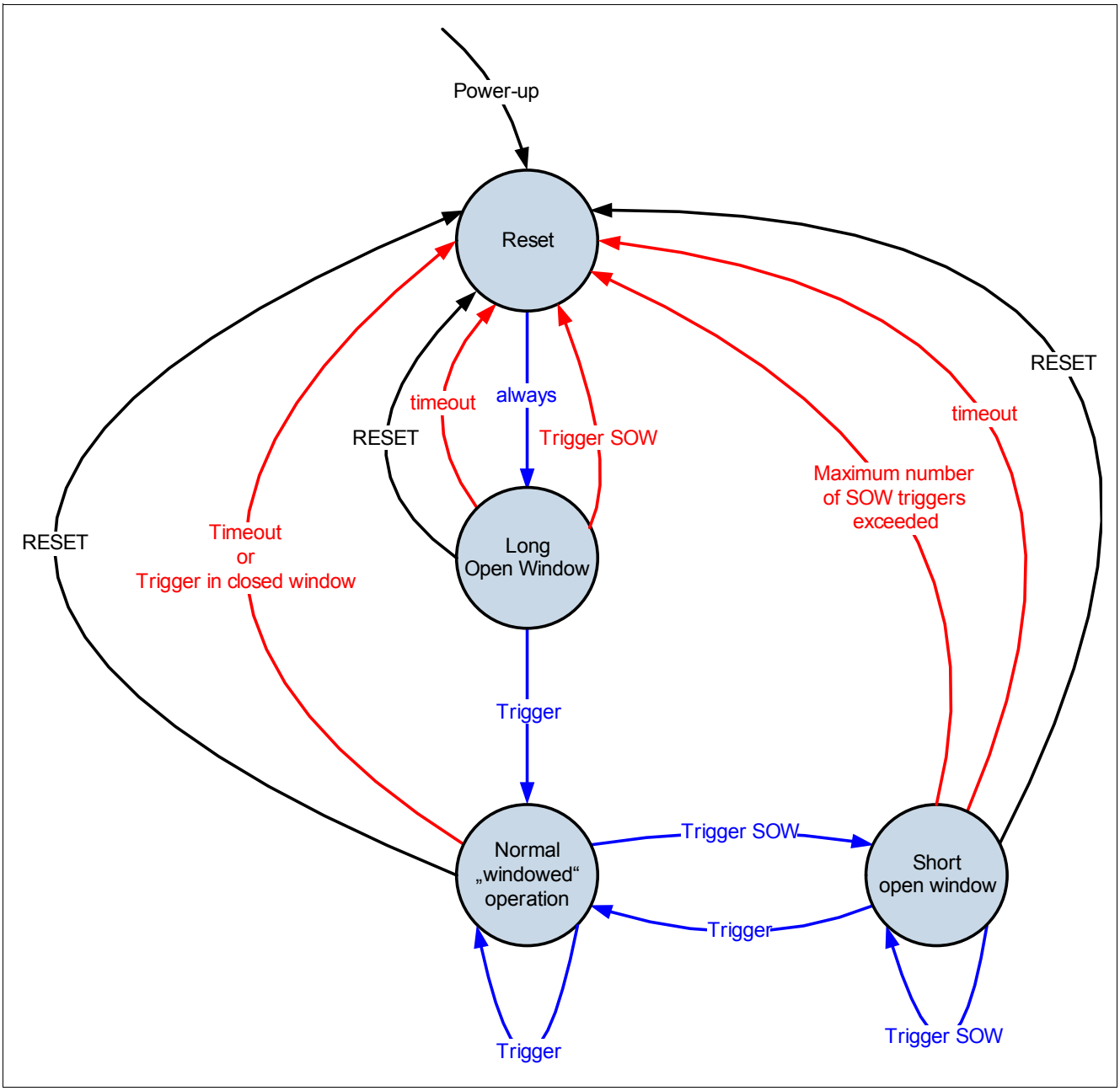

Figure 74 Watchdog Timer Behavior

14.3 Functional Description

14.3.1 Modes of Operation

The mode transition from the low power modes (WDT1 off) to active (WDT1 on) automatically initializes WDT1 to start in long open window mode.

14.3.2 Normal Operation

The software has to trigger the watchdog by writing to the WDT1_TRIG register. By triggering the watchdog also the length of the next watchdog period is selected inherently. The next period starts immediately with the trigger.

After Reset the WDT1 is starting with a long open window. The WDT1 has to be triggered within this long open window otherwise a reset will be generated at the end of the long open window. If the watchdog is not served properly consecutively 5 times, the system will enter sleep mode. After an initial successful trigger the WDT1 operates in a window watchdog mode. Configuring of a short open window inside the long open window is not allowed and will also cause a WDT1 reset.

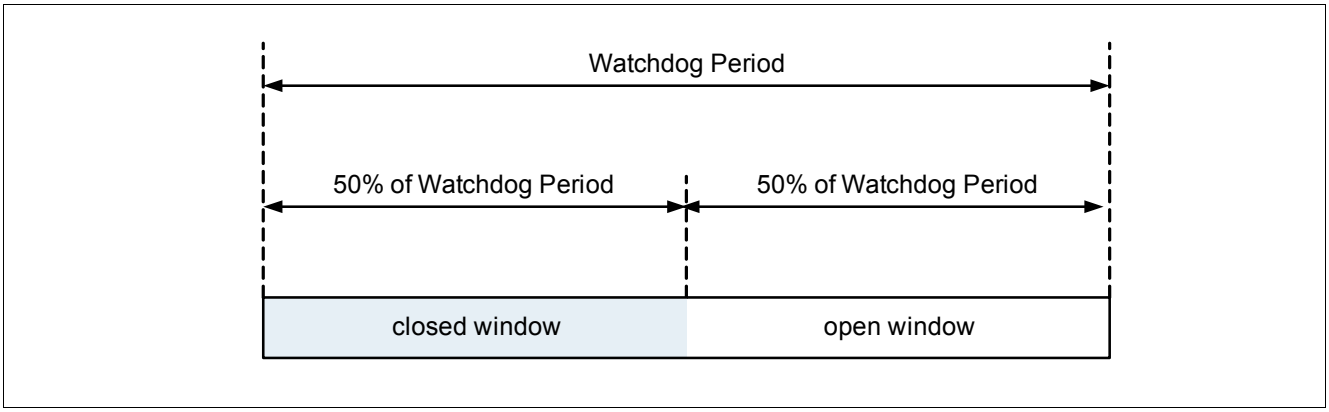

Figure 75 Windowed Watchdog

The first half of the watchdog period is the closed window and the second half is the open window. A trigger of the watchdog has to be done in the open window only. Any trigger in the closed window or failing to trigger the watchdog within the watchdog period will cause a reset. The reset will be indicated by the bit **PMU_ExtWDT** in the reset status register **PMU_RESET_STS** located inside PMU.

Effective open window (safe trigger point)

Due to the variations in the clock source of the WDT1 the effective usable open window, and therefore a safe trigger point, is shorter than 50% of the watchdog period as shown in **Figure 76**.

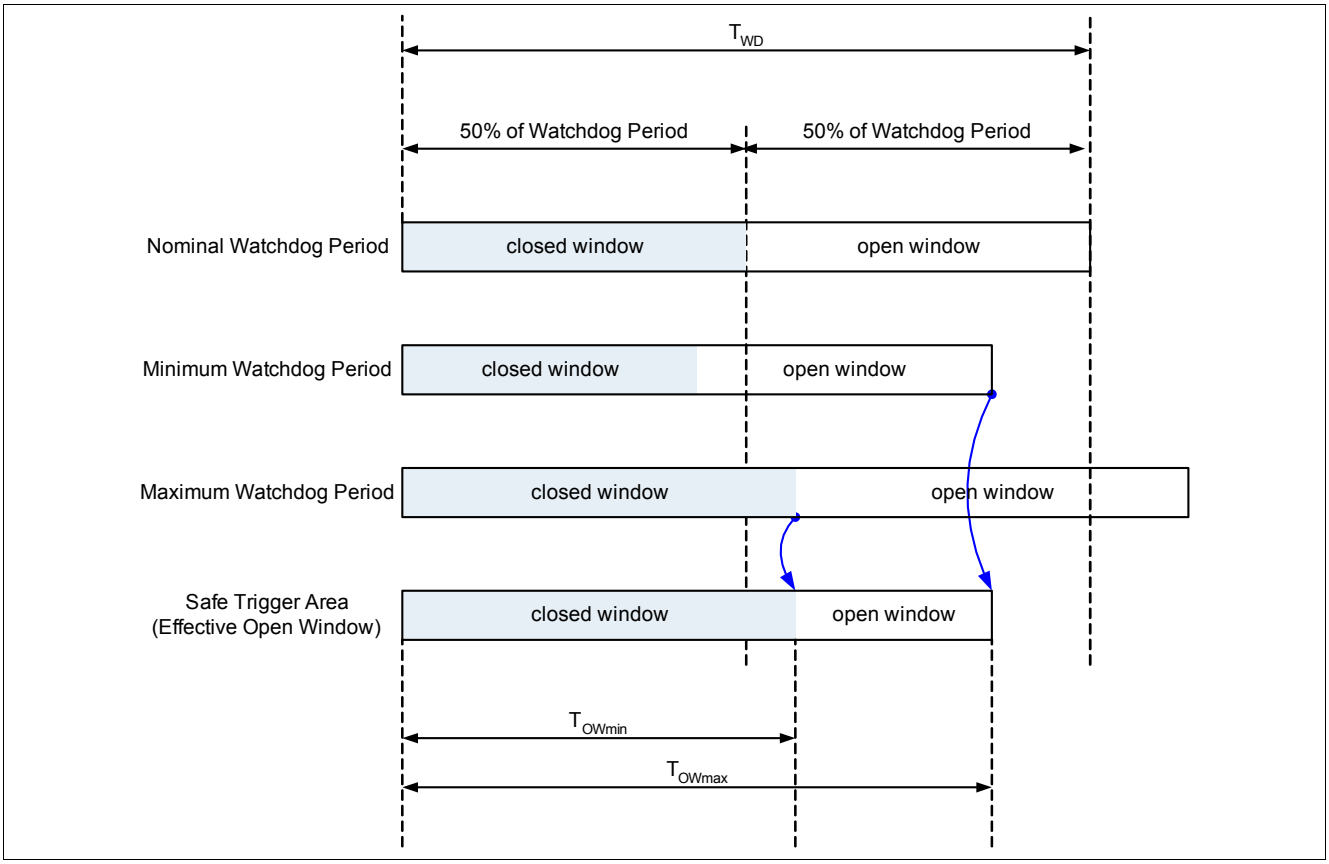

Figure 76 Effective Open Window

E.g. for a variation of 20% and a nominal watchdog period of T_{WD} the start of the effective open window T_{OWmin} is shifted back by 10%, and the end of the effective open window T_{OWmax} is shifted forward by 20%.

Short Open Window (SOW)

Under certain programming conditions, e.g. NVM programming, it might be desired to interrupt the normal windowed watchdog operation. For this purpose a special trigger of a short open window (see **Figure 77**) allows to discard the current window period (also within the closed window) and immediately starts a short open window. The short open window has a fixed length of TSOW independent of the settings of the WDP_SEL bits.

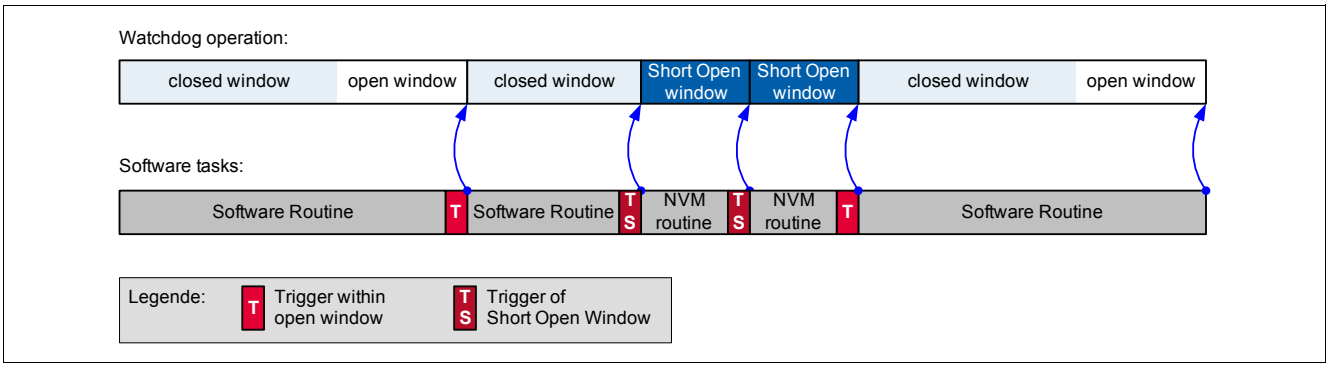

Figure 77 Short Open Window

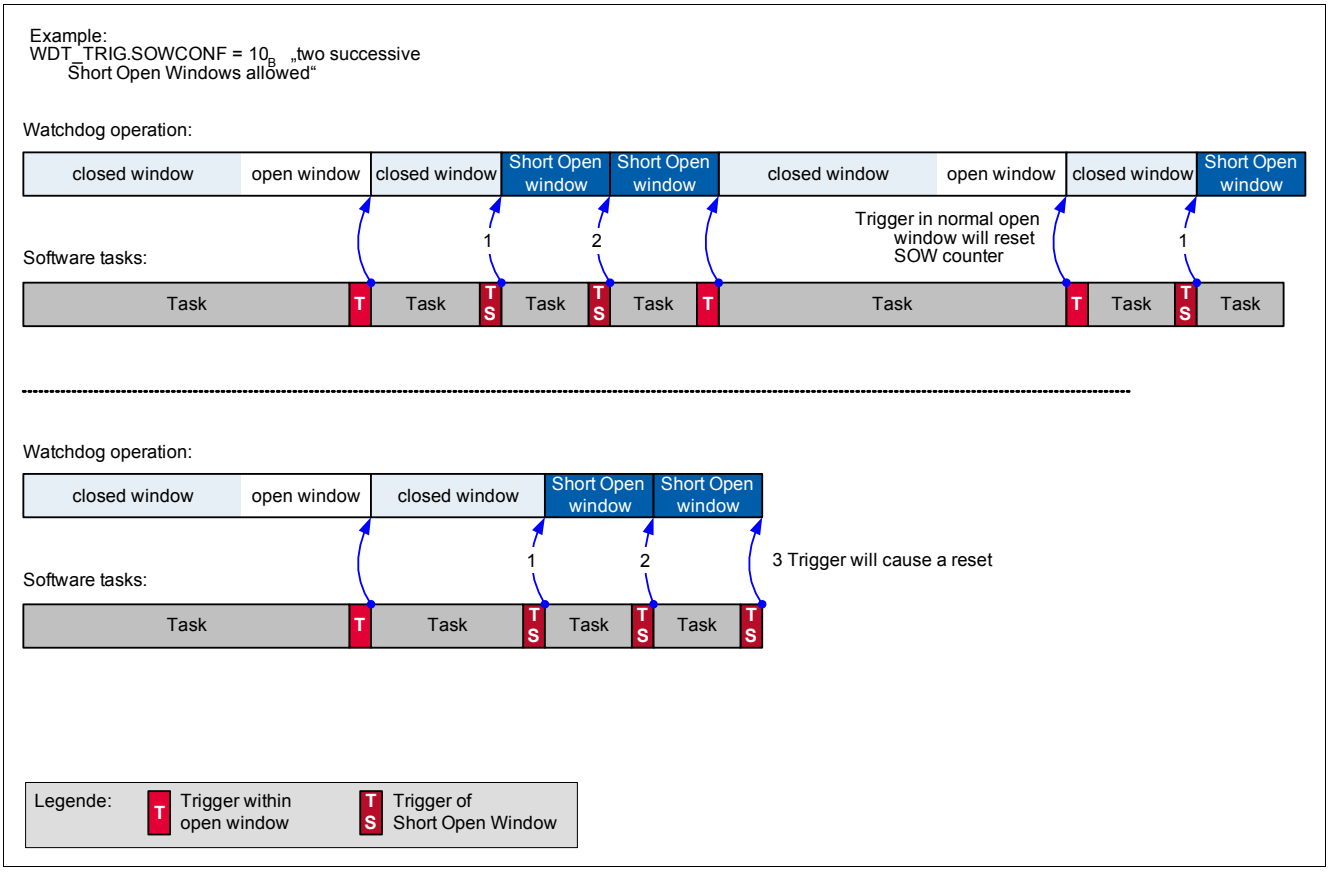

Figure 78 SOW Counter

The mechanism of inserting Short Open Windows has to be enabled/configured with the bits SOWCONF. The configuration allows to insert a maximum of three consecutive Short Open Windows. Each Trigger of the Short Open Window will increase a SOW counter, if the SOW counter exceeds the maximum configured value a reset will be generated. The SOW counter value is reset to 0 by a normal Trigger.

14.3.2.1 Watchdog Register Overview

Table 197 Register Address Space

Module	Base Address	End Address	Note
SCUPM	50006000_H	$50006FFF_H$	SCU_PM

Table 198 Register Overview

Register Short Name	Register Long Name	Offset Address	Reset Value
Watchdog Register Overview,			
SCUPM_WDT1_TRIG	WDT1 Watchdog Control	34_H	**see Table 199**

The registers are addressed bytewise.

14.3.2.1.1 Watchdog Register

WDT1 Watchdog Control

SCUPM_WDT1_TRIG	Offset	Reset Value
WDT1 Watchdog Control	34_H	see Table 199

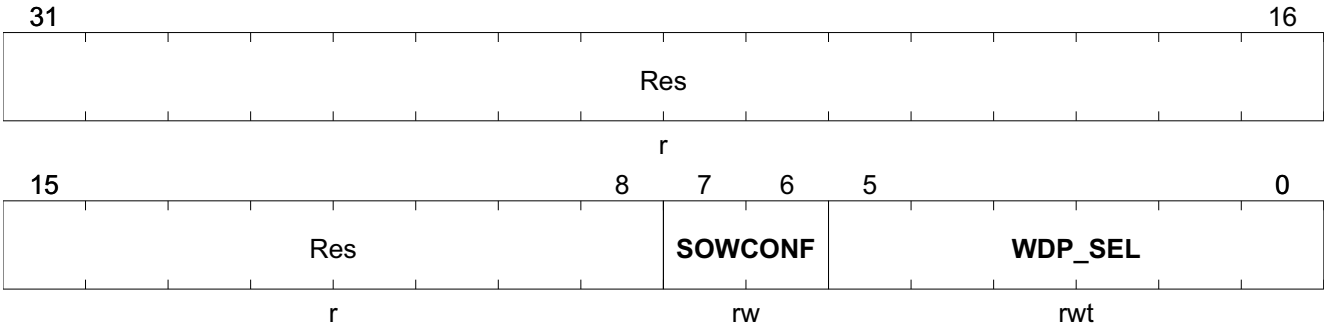

Field	Bits	Type	Description
Res	31:8	r	**Reserved** Always read as 0
SOWCONF	7:6	rw	**Short Open Window Configuration** 0_H **DIS** Short Open Windows disabled[1)] 1_H **SOW1** one successive Short Open Window allowed 2_H **SOW2** two successive Short Open Windows allowed 3_H **SOW3** three successive Short Open Windows allowed
WDP_SEL	5:0	rwt	**Watchdog Period Selection and trigger** Selects the time for the next Watchdog period and allows to trigger the short open window. 00_H **SOW_TRIG** trigger short open window 01_H **WP_1** Watchdog period 16 ms 02_H **WP_2** Watchdog period 32 ms 03_H **WP_3** Watchdog period 48 ms $\cdots_H$ **...** $3F_H$ **WP_63** Watchdog period 1008 ms

1) Writing 00_H to the WDT_TRIG register will cause a reset

Table 199 RESET of SCUPM_WDT1_TRIG

Register Reset Type	Reset Values	Reset Short Name	Reset Mode	Note
RESET_TYPE_3	$0000\ 0000_H$	RESET_TYPE_3		

15 GPIO Ports and Peripheral I/O

This chapter describes the GPIO of the TLE984xQX. It contains the following sections:

- Functional description of the GPIO Ports (see **Section 15.2**)
- GPIO Port register descriptions (see **Section 15.3**)
- TLE984xQX implementation specific details and registers of the GPIO module (see **Section 15.4**)

The TLE984xQX has 18 port pins organized into three parallel ports: Port 0 (P0), Port 1 (P1) and Port 2 (P2). Each port pin has a pair of internal pull-up and pull-down devices that can be individually enabled or disabled. P0 and P1 are bidirectional and can be used as general purpose input/output (GPIO) or to perform alternate input/output functions for the on-chip peripherals. When configured as an output, the open drain mode can be selected. On Port 2 (P2) analog inputs are shared with general purpose input.

15.1 Features

- 10 GPIOs (P0.x & P1.x), 6 analog inputs (P2.x) and two additional analog inputs shared with a XTAL feature (P2.4, P2.5).
- Strong pull-up at Reset-pin and Hall-inputs (except P2.x)

Bidirectional Port Features (P0, P1)

- Configurable pin direction
- Configurable pull-up/pull-down devices
- Configurable open drain mode
- Configurable drive strength
- Transfer of data through digital inputs and outputs (general purpose I/O)
- Alternate input/output for on-chip peripherals

Analog Port Features (P2)

- Configurable pull-up/pull-down devices
- Transfer of data through digital inputs
- Alternate inputs for on-chip peripherals

15.2 Introduction

15.2.1 Port 0 and Port 1

Figure 79 shows the block diagram of an TLE984xQX bidirectional port pin. Each port pin is equipped with a number of control and data bits, thus enabling very flexible usage of the pin. By defining the contents of the control register, each individual pin can be configured as an input or an output. The user can also configure each pin as an open drain pin with or without internal pull-up/pull-down device.

Each bidirectional port pin can be configured for input or output operation. Switching between input and output mode is accomplished through the register Px_DIR (x = 0 or 1), which enables or disables the output and input drivers. A port pin can only be configured as either input or output mode at any one time.

In input mode (default after reset), the output driver is switched off (high-impedance). The actual voltage level present at the port pin is translated into a logic 0 or 1 via a Schmitt-Trigger device and can be read via the register Px_DATA.

In output mode, the output driver is activated and drives the value supplied through the multiplexer to the port pin. In the output driver, each port line can be switched to open drain mode or normal mode (push-pull mode) via the register Px_OD.

The output multiplexer in front of the output driver enables the port output function to be used for different purposes. If the pin is used for general purpose output, the multiplexer is switched by software to the data register Px_DATA. Software can set or clear the bit in Px_DATA and therefore directly influence the state of the port pin. If an on-chip peripheral uses the pin for output signals, alternate output lines (AltDataOut) can be switched via the multiplexer to the output driver circuitry. Selection of the alternate function is defined in registers Px_ALTSEL0 and Px_ALTSEL1. When a port pin is used as an alternate function, its direction must be set accordingly in the register Px_DIR.

Each pin can also be programmed to activate an internal weak pull-up or pull-down device. Register Px_PUDSEL selects whether a pull-up or the pull-down device is activated while register Px_PUDEN enables or disables the pull device.

The port structure used in this device offers the possibility to select the output driver strength and the slew rate. These selections are independent from the output port functionality, such as open-drain, push/pull or input only. The driver strength for each pin can be adapted to the application requirements by registers Px_POCONy (y = 0, 1 or 2) in SCU_DM.

The temperature compensation signals TC[1:0] of all output drivers are connected to all outputs and are controlled by register SCU_TCCR.TC[1:0] in SCU_DM.

*Note: For the definition of Px_POCONy and TCCR registers, refer to **Chapter 7.7.2** of SCU_DM chapter.*

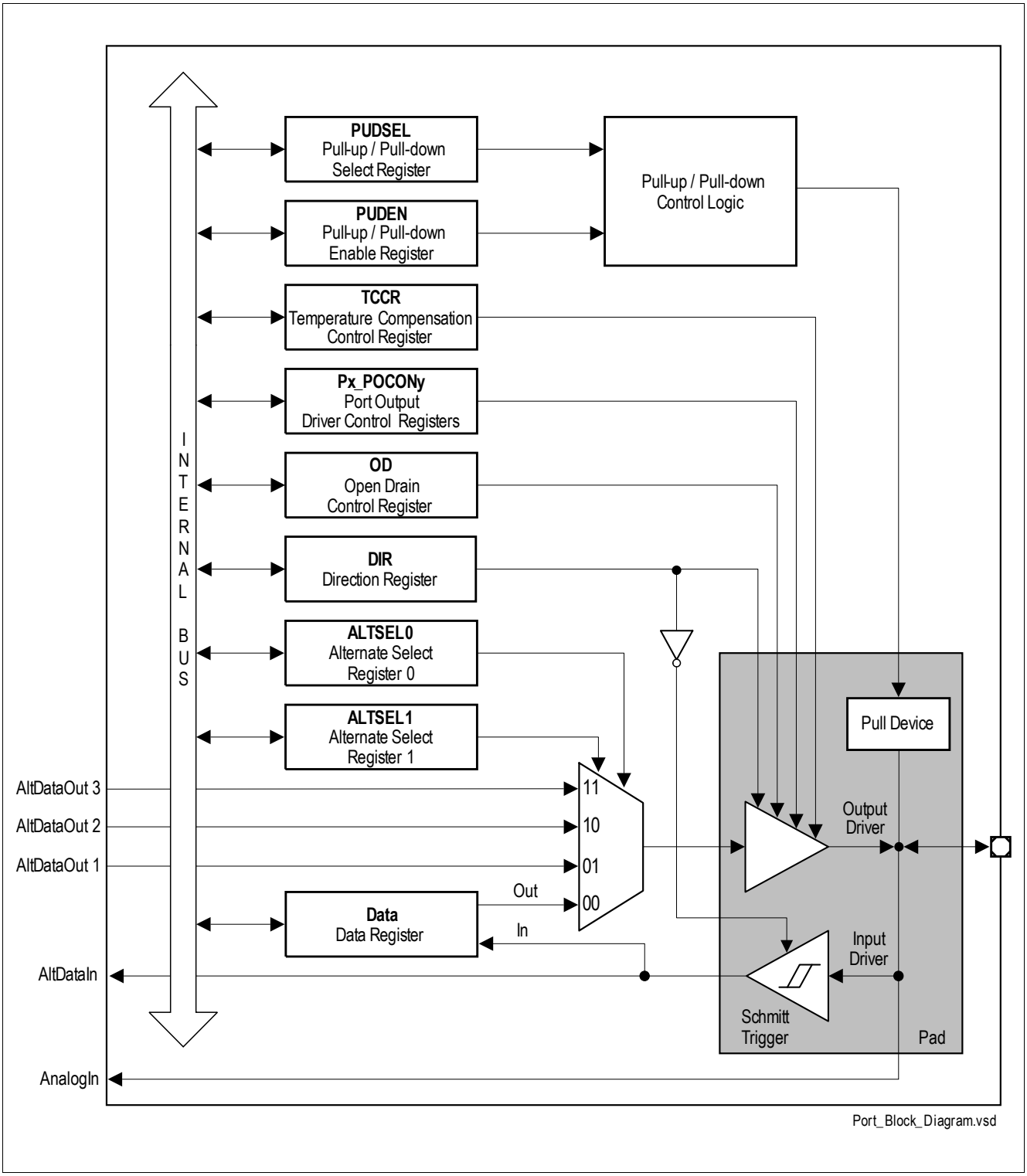

Figure 79 General Structure of Bidirectional Port

15.2.2 Port 2

Figure 80 shows the structure of an input-only port pin. Each P2 pin can only function in input mode. Register P2_DIR is provided to enable or disable the input driver. When the input driver is enabled, the actual voltage level present at the port pin is translated into a logic 0 or 1 via a Schmitt-Trigger device and can be read via the register P2_DATA. Each pin can also be programmed to activate an internal weak pull-up or pull-down device. Register P2_PUDSEL selects whether a pull-up or the pull-down device is activated while register P2_PUDEN enables or disables the pull device. The analog input (AnalogIn) bypasses the digital circuitry and Schmitt-Trigger device for direct feed-through to the ADC input channel.

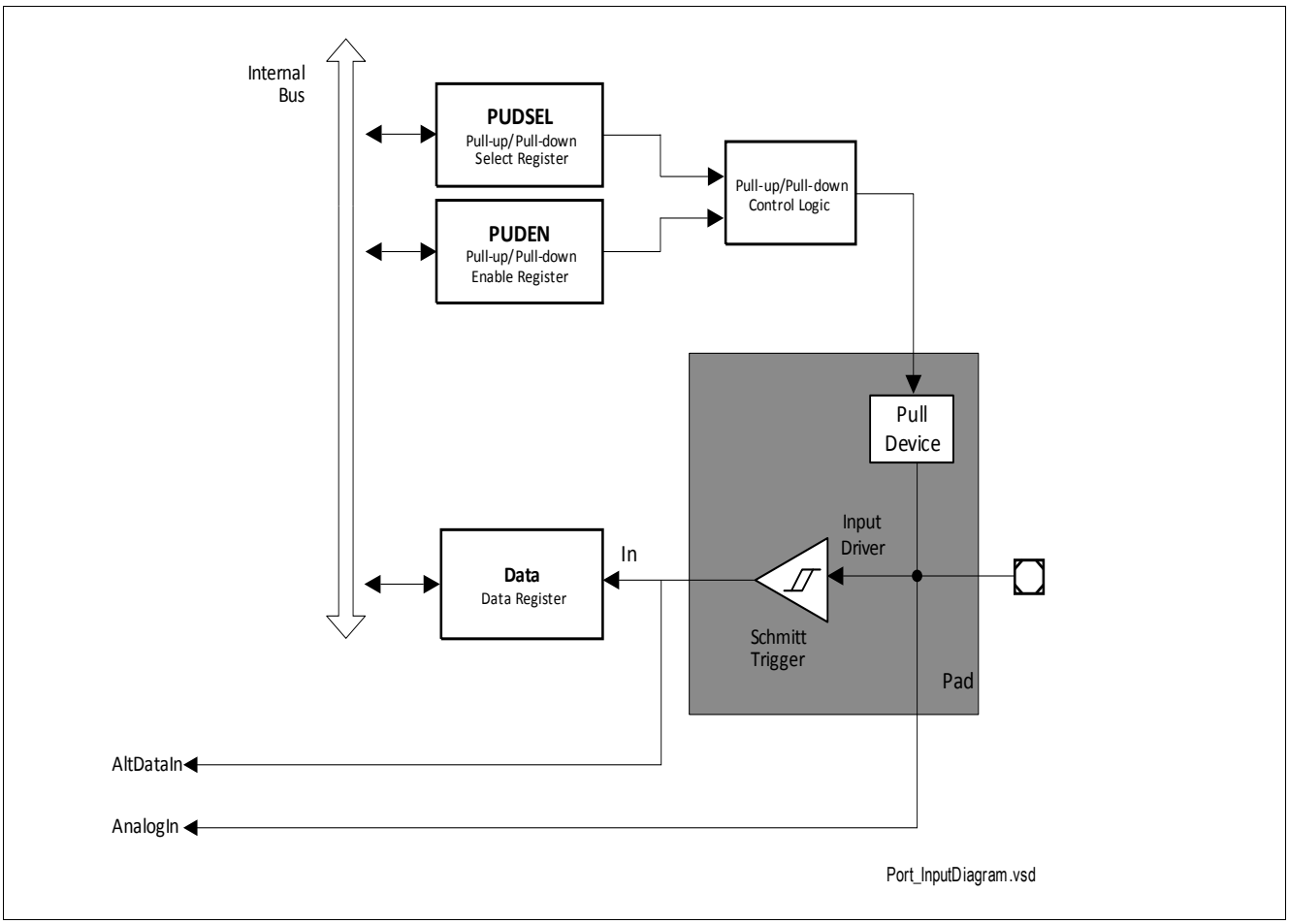

Figure 80 General Structure of Input Port

15.3 General Port Register Description

Each port consists of 8-bit control and data registers. The registers are defined in Table 200.

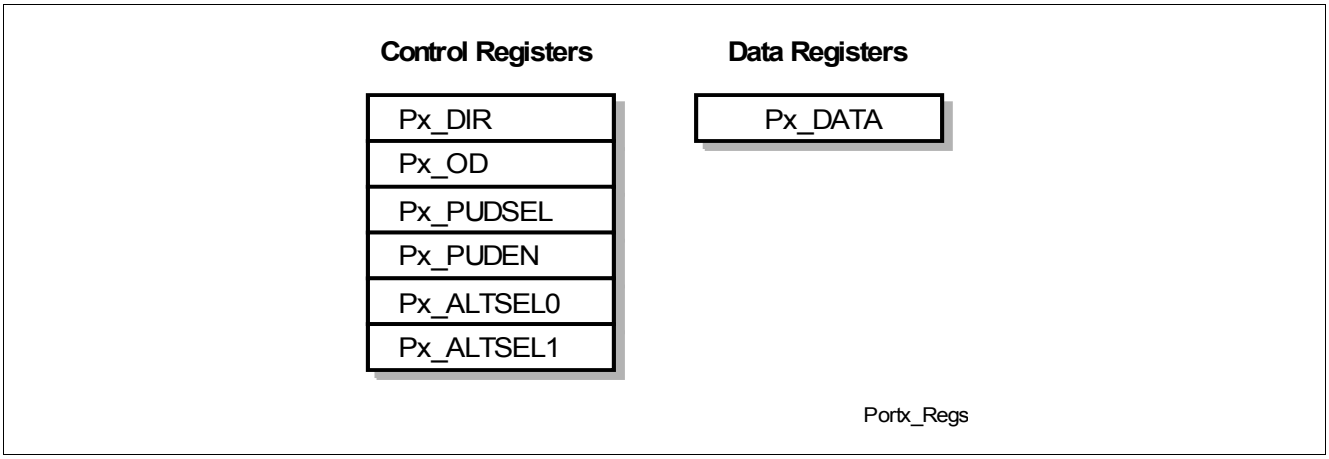

Figure 81 Port Registers

Table 200 Port Registers

Register Short Name	Register Long Name	Description
Px_DATA	Port x Data Register	**Page 389**
Px_DIR	Port x Direction Register	**Page 390**
Px_OD	Port x Open Drain Control Register	**Page 392**
Px_PUDSEL	Port x Pull-Up/Pull-Down Select Register	**Page 393**
Px_PUDEN	Port x Pull-Up/Pull-Down Enable Register	**Page 393**
Px_ALTSEL0	Port x Alternate Select Register 0	**Page 396**
Px_ALTSEL1	Port x Alternate Select Register 1	**Page 396**

Note: Not all the registers are implemented for each port.

15.3.1 Port Data Register

Port x Data Register

If a port pin is used as general purpose output, output data is written into register Px_DATA of port x. When the port pin is used as general purpose input, the value at a port pin can be read through the register Px_DATA. The data register Px_DATA always contains a latched value of the assigned port pin.

Px_DATA	Offset	Reset Value
Port x Data Register	xx_H	see Table 201

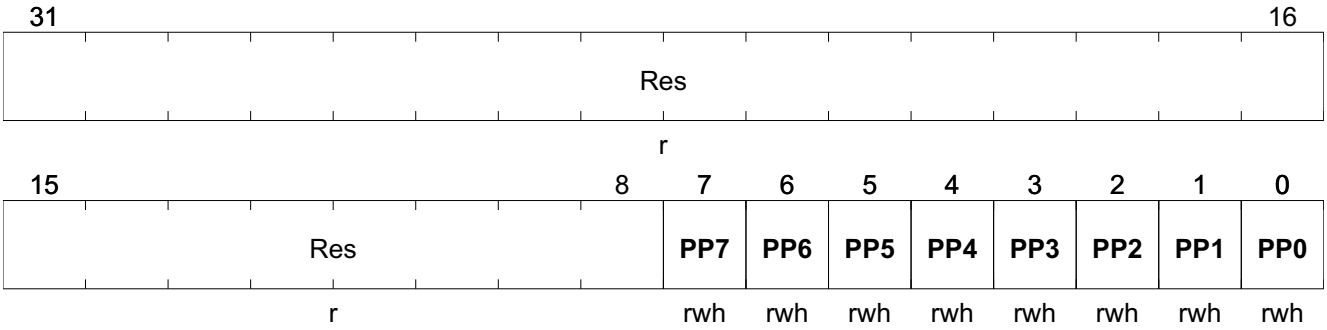

Field	Bits	Type	Description
Res	31:8	r	**Reserved** Always read as 0
PP7	7	rwh	**Portx Pin 7 Data Value** 0_B Port x pin 7 data value = 0 1_B Port x pin 7 data value = 1
PP6	6	rwh	**Portx Pin 6 Data Value** 0_B Port x pin 6 data value = 0 1_B Port x pin 6 data value = 1
PP5	5	rwh	**Portx Pin 5 Data Value** 0_B Port x pin 5 data value = 0 1_B Port x pin 5 data value = 1
PP4	4	rwh	**Portx Pin 4 Data Value** 0_B Port x pin 4 data value = 0 1_B Port x pin 4 data value = 1
PP3	3	rwh	**Portx Pin 3 Data Value** 0_B Port x pin 3 data value = 0 1_B Port x pin 3 data value = 1
PP2	2	rwh	**Portx Pin 2 Data Value** 0_B Port x pin 2 data value = 0 1_B Port x pin 2 data value = 1
PP1	1	rwh	**Portx Pin 1 Data Value** 0_B Port x pin 1 data value = 0 1_B Port x pin 1 data value = 1

Field	Bits	Type	Description
PP0	0	rwh	**Portx Pin 0 Data Value** 0_B Port x pin 0 data value = 0 1_B Port x pin 0 data value = 1

Table 201 RESET of Px_DATA

Register Reset Type	Reset Values	Reset Short Name	Reset Mode	Note
RESET_TYPE_3	00000000_H	RESET_TYPE_3		

Bit Px_DATA.n can only be written if the corresponding pin is set to output, i.e. Px_DIR.n = 1. The contents of Px_DATA.n are output on the assigned pin if the pin is assigned as GPIO pin and the direction is switched/set to output. A read operation of Px_DATA returns the register value and not the state of the Px_DATA pins.

15.3.2 Direction Register

The direction of bidirectional port pins is controlled by the respective direction register Px_DIR. For input-only port pins, register Px_DIR is used to enable or disable the input drivers.

Port x Direction Register

Px_DIR	Offset	Reset Value
Port x Direction Register	**xx_H**	**see Table 202**

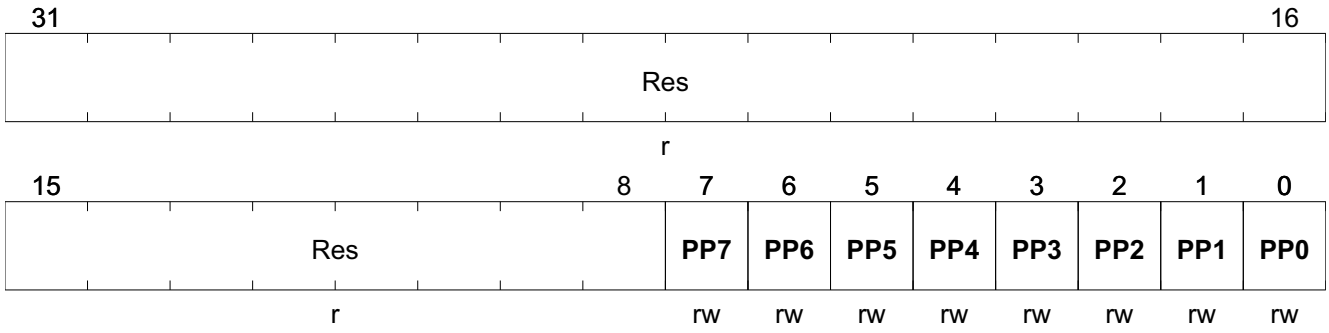

Field	Bits	Type	Description
Res	31:8	r	**Reserved** Always read as 0
PP7	7	rw	**Bidirectional: Port x Pin 7 Direction Control or Input-only: Port x Pin 7 Driver Control** 0_B Direction is set to input (default) or Input driver is enabled (default) 1_B Direction is set to output or Input driver is disabled
PP6	6	rw	**Bidirectional: Port x Pin 6 Direction Control or Input-only: Port x Pin 6 Driver Control** 0_B Direction is set to input (default) or Input driver is enabled (default) 1_B Direction is set to output or Input driver is disabled

Field	Bits	Type	Description
PP5	5	rw	**Bidirectional: Port x Pin 5 Direction Control or Input-only: Port x Pin 5 Driver Control** 0_B Direction is set to input (default) or Input driver is enabled (default) 1_B Direction is set to output or Input driver is disabled
PP4	4	rw	**Bidirectional: Port x Pin 4 Direction Control or Input-only: Port x Pin 4 Driver Control** 0_B Direction is set to input (default) or Input driver is enabled (default) 1_B Direction is set to output or Input driver is disabled
PP3	3	rw	**Bidirectional: Port x Pin 3 Direction Control or Input-only: Port x Pin 3 Driver Control** 0_B Direction is set to input (default) or Input driver is enabled (default) 1_B Direction is set to output or Input driver is disabled
PP2	2	rw	**Bidirectional: Port x Pin 2 Direction Control or Input-only: Port x Pin 2 Driver Control** 0_B Direction is set to input (default) or Input driver is enabled (default) 1_B Direction is set to output or Input driver is disabled
PP1	1	rw	**Bidirectional: Port x Pin 1 Direction Control or Input-only: Port x Pin 1 Driver Control** 0_B Direction is set to input (default) or Input driver is enabled (default) 1_B Direction is set to output or Input driver is disabled
PP0	0	rw	**Bidirectional: Port x Pin 0 Direction Control or Input-only: Port x Pin 0 Driver Control** 0_B Direction is set to input (default) or Input driver is enabled (default) 1_B Direction is set to output or Input driver is disabled

Table 202 RESET of Px_DIR

Register Reset Type	Reset Values	Reset Short Name	Reset Mode	Note
RESET_TYPE_3	00000000_H	RESET_TYPE_3		

15.3.3 Open Drain Control Register

Port x Open Drain Control Register

Each pin in output mode can be switched to Open Drain Mode. If driven with 1, no driver will be activated and the pin output state depends on the internal pull-up/pull-down device setting; if driven with 0, the driver's pull-down transistor will be activated.

The open drain mode is controlled by the register Px_OD.

Px_OD	Offset	Reset Value
Port x Open Drain Control Register	**xx_H**	**see Table 203**

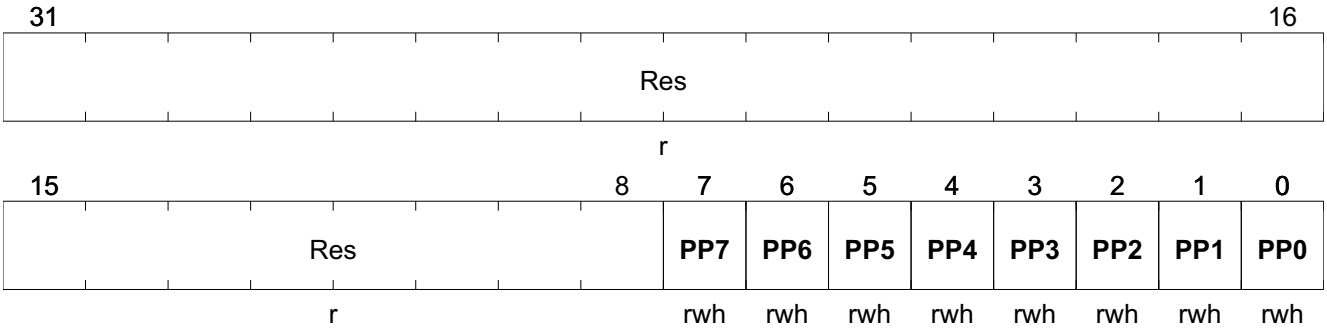

Field	Bits	Type	Description
Res	31:8	r	**Reserved** Always read as 0
PP7	7	rwh	**Port 7 Pin n Open Drain Mode** 0_B **Normal Mode** , output is actively driven for 0 and 1 state (default) 1_B **Open Drain Mode** , output is actively driven only for 0 state
PP6	6	rwh	**Port 6 Pin n Open Drain Mode** 0_B **Normal Mode** , output is actively driven for 0 and 1 state (default) 1_B **Open Drain Mode** , output is actively driven only for 0 state
PP5	5	rwh	**Port 5 Pin n Open Drain Mode** 0_B **Normal Mode** , output is actively driven for 0 and 1 state (default) 1_B **Open Drain Mode** , output is actively driven only for 0 state
PP4	4	rwh	**Port 4 Pin n Open Drain Mode** 0_B **Normal Mode** , output is actively driven for 0 and 1 state (default) 1_B **Open Drain Mode** , output is actively driven only for 0 state

Field	Bits	Type	Description
PP3	3	rwh	**Port 3 Pin n Open Drain Mode** 0_B **Normal Mode** , output is actively driven for 0 and 1 state (default) 1_B **Open Drain Mode** , output is actively driven only for 0 state
PP2	2	rwh	**Port 2 Pin n Open Drain Mode** 0_B **Normal Mode** , output is actively driven for 0 and 1 state (default) 1_B **Open Drain Mode** , output is actively driven only for 0 state
PP1	1	rwh	**Port 1 Pin n Open Drain Mode** 0_B **Normal Mode** , output is actively driven for 0 and 1 state (default) 1_B **Open Drain Mode** , output is actively driven only for 0 state
PP0	0	rwh	**Port 0 Pin n Open Drain Mode** 0_B **Normal Mode** , output is actively driven for 0 and 1 state (default) 1_B **Open Drain Mode** , output is actively driven only for 0 state

Table 203 RESET of Px_OD

Register Reset Type	Reset Values	Reset Short Name	Reset Mode	Note
RESET_TYPE_3	00000000_H	RESET_TYPE_3		

15.3.4 Pull-Up/Pull-Down Device Register

Port x Pull-Up/Pull-Down Select Register

Internal pull-up/pull-down devices can be optionally applied to a port pin. This offers the possibility to configure the following input characteristics:

- tristate
- high-impedance with a weak pull-up device
- high-impedance with a weak pull-down device

and the following output characteristics:

- push/pull (optional pull-up/pull-down)
- open drain with internal pull-up
- open drain with external pull-up

The pull-up/pull-down device can be fixed or controlled via the registers Px_PUDSEL and Px_PUDEN. Register Px_PUDSEL selects the type of pull-up/pull-down device, while register Px_PUDEN enables or disables it. The pull-up/pull-down device can be selected pinwise.

Note: The selected pull-up/pull-down device is enabled by setting the respective bit in the Px_PUDEN register.

Px_PUDSEL	Offset	Reset Value
Port x Pull-Up/Pull-Down Select Register	**xx_H**	**see Table 204**

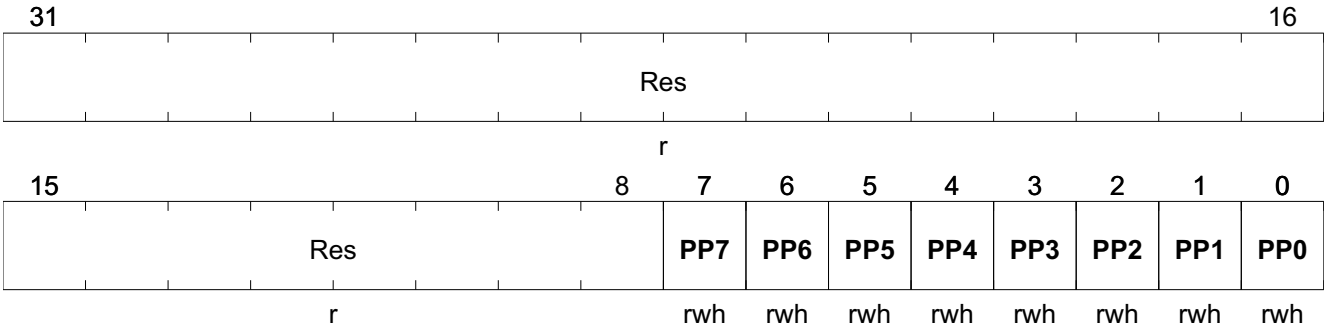

Field	Bits	Type	Description
Res	31:8	r	**Reserved** Always read as 0
PP7	7	rwh	**Pull-Up/Pull-Down Select Port x Bit 7** 0_B Pull-down device is selected 1_B Pull-up device is selected
PP6	6	rwh	**Pull-Up/Pull-Down Select Port x Bit 6** 0_B Pull-down device is selected 1_B Pull-up device is selected
PP5	5	rwh	**Pull-Up/Pull-Down Select Port x Bit 5** 0_B Pull-down device is selected 1_B Pull-up device is selected
PP4	4	rwh	**Pull-Up/Pull-Down Select Port x Bit 4** 0_B Pull-down device is selected 1_B Pull-up device is selected
PP3	3	rwh	**Pull-Up/Pull-Down Select Port x Bit 3** 0_B Pull-down device is selected 1_B Pull-up device is selected
PP2	2	rwh	**Pull-Up/Pull-Down Select Port x Bit 2** 0_B Pull-down device is selected 1_B Pull-up device is selected
PP1	1	rwh	**Pull-Up/Pull-Down Select Port x Bit 1** 0_B Pull-down device is selected 1_B Pull-up device is selected
PP0	0	rwh	**Pull-Up/Pull-Down Select Port x Bit 0** 0_B Pull-down device is selected 1_B Pull-up device is selected

Table 204 RESET of Px_PUDSEL

Register Reset Type	Reset Values	Reset Short Name	Reset Mode	Note
RESET_TYPE_3	00000000_H	RESET_TYPE_3		

Port x Pull-Up/Pull-Down Enable Register

Px_PUDEN	Offset	Reset Value
Port x Pull-Up/Pull-Down Enable Register	xx_H	see Table 205

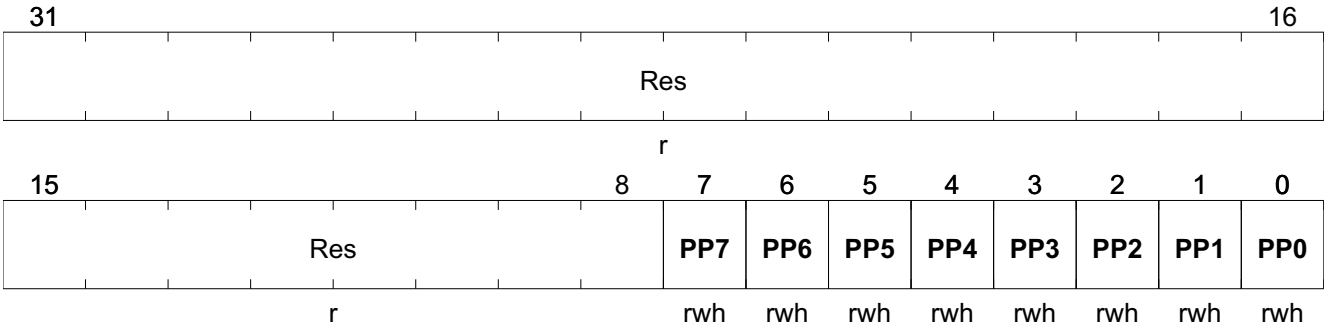

Field	Bits	Type	Description
Res	31:8	r	**Reserved** Always read as 0
PP7	7	rwh	**Pull-Up/Pull-Down Enable at Port x Bit 7** 0_B Pull-up or Pull-down device is disabled 1_B Pull-up or Pull-down device is enabled
PP6	6	rwh	**Pull-Up/Pull-Down Enable at Port x Bit 6** 0_B Pull-up or Pull-down device is disabled 1_B Pull-up or Pull-down device is enabled
PP5	5	rwh	**Pull-Up/Pull-Down Enable at Port x Bit 5** 0_B Pull-up or Pull-down device is disabled 1_B Pull-up or Pull-down device is enabled
PP4	4	rwh	**Pull-Up/Pull-Down Enable at Port x Bit 4** 0_B Pull-up or Pull-down device is disabled 1_B Pull-up or Pull-down device is enabled
PP3	3	rwh	**Pull-Up/Pull-Down Enable at Port x Bit 3** 0_B Pull-up or Pull-down device is disabled 1_B Pull-up or Pull-down device is enabled
PP2	2	rwh	**Pull-Up/Pull-Down Enable at Port x Bit 2** 0_B Pull-up or Pull-down device is disabled 1_B Pull-up or Pull-down device is enabled
PP1	1	rwh	**Pull-Up/Pull-Down Enable at Port x Bit 1** 0_B Pull-up or Pull-down device is disabled 1_B Pull-up or Pull-down device is enabled
PP0	0	rwh	**Pull-Up/Pull-Down Enable at Port x Bit 0** 0_B Pull-up or Pull-down device is disabled 1_B Pull-up or Pull-down device is enabled

Table 205 RESET of Px_PUDEN

Register Reset Type	Reset Values	Reset Short Name	Reset Mode	Note
RESET_TYPE_3	00000000_H	RESET_TYPE_3		

15.3.5 Alternate Input Functions

The number of alternate functions that uses a pin for input is not limited. Each port control logic of an I/O pin provides several input paths:

- Digital input value via register
- Direct digital input value

15.3.6 Alternate Output Functions

Port x Alternate Select Register

Alternate functions are selected via an output multiplexer which can select up to four output lines. This multiplexer can be controlled by the following signals:

- Register Px_ALTSEL0
- Register Px_ALTSEL1

Selection of alternate functions is defined in registers Px_ALTSEL0 and Px_ALTSEL1.

Px_ALTSELn (n=0-1)	Offset	Reset Value
Port x Alternate Select Register	xx_H	see Table 206

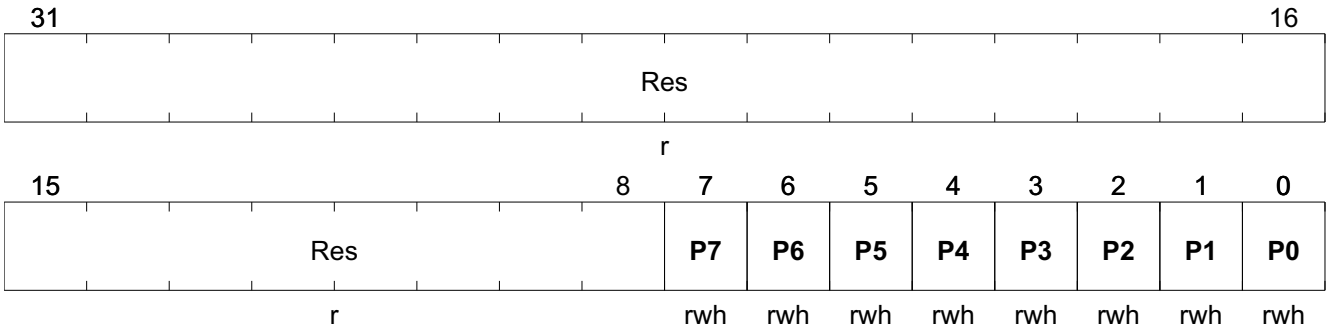

Field	Bits	Type	Description
Res	31:8	r	**Reserved** Always read as 0
P7	7	rwh	**See Table 207**
P6	6	rwh	**See Table 207**
P5	5	rwh	**See Table 207**
P4	4	rwh	**See Table 207**
P3	3	rwh	**See Table 207**
P2	2	rwh	**See Table 207**

Field	Bits	Type	Description
P1	1	rwh	See Table 207
P0	0	rwh	See Table 207

Table 206 RESET of Px_ALTSELn (n=0-1)

Register Reset Type	Reset Values	Reset Short Name	Reset Mode	Note
RESET_TYPE_3	00000000_H	RESET_TYPE_3		

Table 207 Function of Bits Px_ALTSEL0.Pn and Px_ALTSEL1.Pn

Px_ALTSEL0.Pn	Px_ALTSEL1.Pn	Function
0	0	Normal GPIO
1	0	Alternate Select 1
0	1	Alternate Select 2
1	1	Alternate Select 3

15.3.7 Port Output Control

Px_POCONy registers controls the output driver strength for each of the bidirectional port pin through the bit field PDMn, where x denotes the port number and n denotes the pin number.

Port Output Control Register

SCU_Px_POCON0	Offset	Reset Value
Port Output Control Register	xx_H	see Table 208

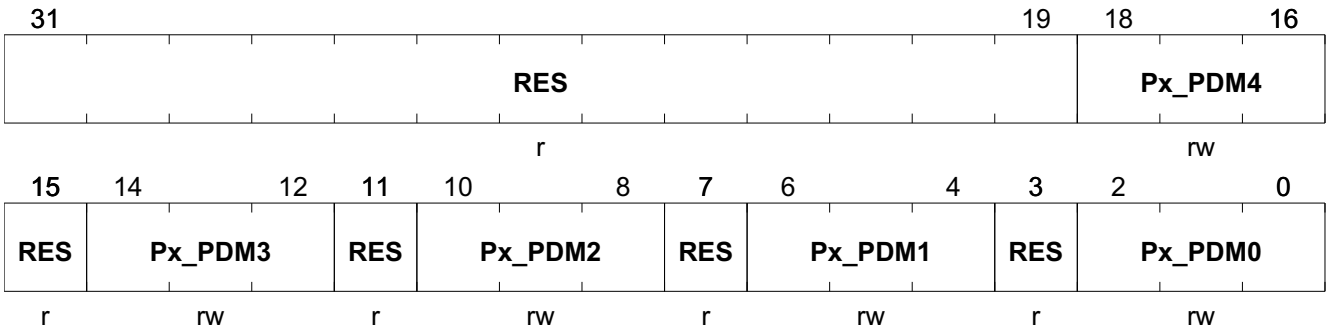

Field	Bits	Type	Description
RES	31:19	r	**Reserved** Returns 0 if read; should be written with 0.

Field	Bits	Type	Description
Px_PDM4	18:16	rw	**Px.x Port Driver Mode** Code Driver Strength[1] and Edge Shape[2] 000_B **Not used** 001_B **Not used** 010_B **Not used** 011_B **Weak Driver** 100_B **Medium Driver** 101_B **Medium Driver** 110_B **Medium Driver** 111_B **Weak Driver**
RES	15	r	**Reserved** Returns 0 if read; should be written with 0.
Px_PDM3	14:12	rw	**Px.x Port Driver Mode** Code Driver Strength[1] and Edge Shape[2] 000_B **Not used** 001_B **Not used** 010_B **Not used** 011_B **Weak Driver** 100_B **Medium Driver** 101_B **Medium Driver** 110_B **Medium Driver** 111_B **Weak Driver**
RES	11	r	**Reserved** Returns 0 if read; should be written with 0.
Px_PDM2	10:8	rw	**Px.x Port Driver Mode** Code Driver Strength[1] and Edge Shape[2] 000_B **Strong driver and sharp edge mode** 001_B **Strong driver and medium edge mode** 010_B **Strong driver and soft edge mode** 011_B **Weak Driver** 100_B **Medium Driver** 101_B **Medium Driver** 110_B **Medium Driver** 111_B **Weak Driver**
RES	7	r	**Reserved** Returns 0 if read; should be written with 0.
Px_PDM1	6:4	rw	**Px.x Port Driver Mode** Code Driver Strength[1] and Edge Shape[2] 000_B **Not used** 001_B **Not used** 010_B **Not used** 011_B **Weak Driver** 100_B **Medium Driver** 101_B **Medium Driver** 110_B **Medium Driver** 111_B **Weak Driver**
RES	3	r	**Reserved** Returns 0 if read; should be written with 0.

Field	Bits	Type	Description
Px_PDM0	2:0	rw	**Px.x Port Driver Mode** Code Driver Strength[1] and Edge Shape[2] 000_B **Not used** 001_B **Not used** 010_B **Not used** 011_B **Weak Driver** 100_B **Medium Driver** 101_B **Medium Driver** 110_B **Medium Driver** 111_B **Weak Driver**

1) Defines the current the respective driver can deliver to the external circuitry.

2) Defines the switching characteristics to the respective new output driver. This also influences the peak currents through the driver when producing an edge, i.e. when changing the output level.

Table 208 RESET of SCU_Px_POCON0

Register Reset Type	Reset Values	Reset Short Name	Reset Mode	Note
RESET_TYPE_3	00000000_H	RESET_TYPE_3		

15.4 TLE984xQX Port Implementation Details

15.4.1 Port 0

15.4.1.1 Overview

Port 0 is a general purpose bidirectional port. The port registers of Port 0 are shown in **Table 82**.

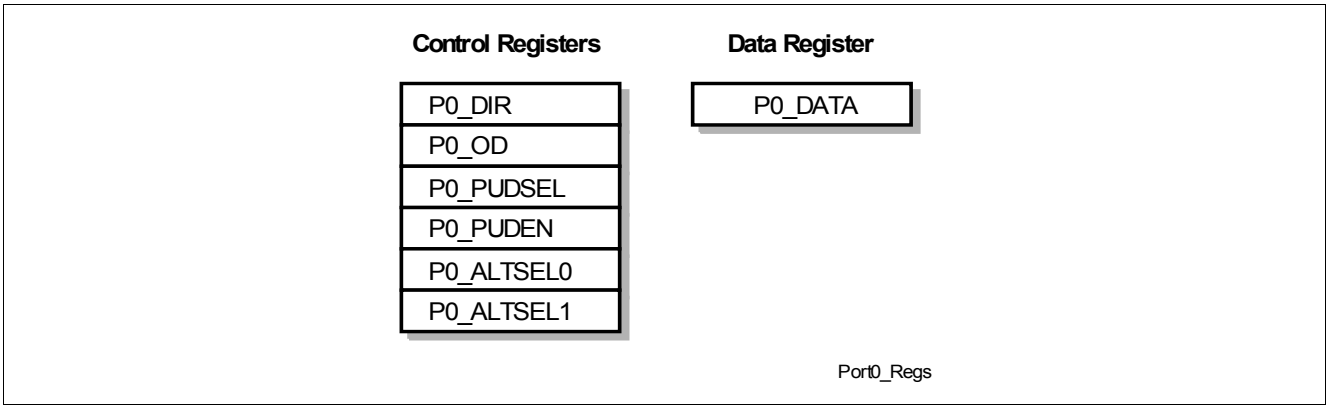

Figure 82 Port 0 Registers

Table 209 Port 0 Registers

Register Short Name	Register Long Name
P0_DATA	Port 0 Data Register
P0_DIR	Port 0 Direction Register
P0_OD	Port 0 Open Drain Control Register
P0_PUDSEL	Port 0 Pull-Up/Pull-Down Select Register
P0_PUDEN	Port 0 Pull-Up/Pull-Down Enable Register
P0_ALTSEL0	Port 0 Alternate Select Register 0
P0_ALTSEL1	Port 0 Alternate Select Register 1

15.4.1.2 Port 0 Functions

Port 0 alternate function mapping according **Table 210**

Table 210 Port 0 Input/Output Functions

Port Pin	Input/Output	Select	Connected Signal(s)	From/to Module
P0.0	Input	GPI	P0_DATA.P0	
		INP1	T12HR_0	CCU6
		INP2	T4INA	GPT12
		INP3	T2_0	Timer 2
		INP4	SWD_CLK	SWD
		INP5	EXINT2_3	SCU
	Output	GPO	P0_DATA.P0	
		ALT1	T3OUT_0	GPT12
		ALT2	EXF21_0	Timer 21
		ALT3	UART2_RXDO	UART2
P0.1	Input	GPI	P0_DATA.P1	
		INP1	T13HR_0	CCU6
		INP2	UART1_RXD	UART1
		INP3	T2EX_1	Timer 2
		INP4	T21_0	Timer 21
		INP5	EXINT0_3	SCU
		INP6	T4INC	GPT12
		INP7	CAPINA	GPT12
		INP8	SSC12_S_SCK	SSC1/2
		INP9	CC62_0	CCU6
	Output	GPO	P0_DATA.P1	
		ALT1	T6OUT_0	GPT12
		ALT2	CC62_0	CCU6
		ALT3	SSC12_M_SCK	SSC1/2
P0.2	Input	GPI	P0_DATA.P2	
		INP1	T2EUDA	GPT12
		INP2	CTRAP_0	CCU6
		INP3	SSC12_M_MRST	SSC1/2
		INP4	T21EX_0	Timer 21
		INP5	EXINT1_3	SCU
	Output	GPO	P0_DATA.P2	
		ALT1	SSC12_S_MRST	SSC1/2
		ALT2	UART1_TXD	UART1
		ALT3	EXF2_0	Timer 2

Table 210 Port 0 Input/Output Functions (cont'd)

Port Pin	Input/Output	Select	Connected Signal(s)	From/to Module
P0.3	Input	GPI	P0_DATA.P3	
		INP1	SSC1_S_SCK	SSC1
		INP2	T4EUDA	GPT12
		INP3	CAPINB	GPT12
		INP4	EXINT1_2	SCU
		INP5	T3EUDD	GPT12
		INP6	CCPOS0_1	CCU6
	Output	GPO	P0_DATA.P3	
		ALT1	SSC1_M_SCK	SSC1
		ALT2	T6OFL	GPT12
		ALT3	T6OUT_1	GPT12
P0.4	Input	GPI	P0_DATA.P4	
		INP1	SSC1_S_MTSR	SSC1
		INP2	CC60_0	CCU6
		INP3	T21_2	Timer 21
		INP4	EXINT2_2	SCU
		INP5	T3EUDA	GPT12
		INP6	CCPOS1_1	CCU6
	Output	GPO	P0_DATA.P4	
		ALT1	SSC1_M_MTSR	SSC1
		ALT2	CC60_0	CCU6
		ALT3	CLKOUT_0	SCU
P0.5	Input	GPI	P0_DATA.P5	
		INP1	SSC1_M_MRST	SSC1
		INP2	EXINT0_0	SCU
		INP3	T21EX_2	Timer 21
		INP4	T5INA	GPT12
		INP5	CCPOS2_1	CCU6
	Output	GPO	P0_DATA.P5	
		ALT1	SSC1_S_MRST	SSC1
		ALT2	COUT60_0	CCU6
		ALT3	LIN_RXD	LIN

15.4.1.3 Port 0 Register Description

Table 211 Register Address Space

Module	Base Address	End Address	Note
PORT	48028000_H	$48029FFF_H$	Ports
SCU	$5000\ 5000_H$	$5000\ 5FFF_H$	System Control Unit - Digital Modules

Table 212 Register Overview

Register Short Name	Register Long Name	Offset Address	Reset Value
Port 0 Register Description,			
P0_DATA	Port 0 Data Register	00_H	$000000XX_H$
P0_DIR	Port 0 Direction Register	04_H	00000000_H
P0_OD	Port 0 Open Drain Control Register	08_H	00000000_H
P0_PUDSEL	Port 0 Pull-Up/Pull-Down Select Register	$0C_H$	$0000003B_H$
P0_PUDEN	Port 0 Pull-Up/Pull-Down Enable Register	10_H	$0000003F_H$
P0_ALTSEL0	Port 0 Alternate Select Register 0	14_H	00000000_H
P0_ALTSEL1	Port 0 Alternate Select Register 1	18_H	00000000_H
SCU_P0_POCON0	Port Output Control Register	$0E8_H$	00000000_H

The registers are addressed wordwise.

Data Register

P0_DATA **Offset** **Reset Value**

Port 0 Data Register **00_H** **see Table 213**

31	30	29	28	27	26	25	24	23	22	21	20	19	18	17	16
Res										PP5_STS	PP4_STS	PP3_STS	PP2_STS	PP1_STS	PP0_STS
r										r	r	r	r	r	r

15	14	13	12	11	10	9	8	7	6	5	4	3	2	1	0
RES										PP5	PP4	PP3	PP2	PP1	PP0
r										rwh	rwh	rwh	rwh	rwh	rwh

Field	Bits	Type	Description
Res	31:22	r	**Reserved** Always read as 0

Field	Bits	Type	Description
PP5_STS	21	r	**Port 0 Pin 5 Data Value (read back of Port Data when IO is configured as output)** 0_B **0** Port 0 pin 5 data value = 0 1_B **1** Port 0 pin 5 data value = 1
PP4_STS	20	r	**Port 0 Pin 4 Data Value (read back of Port Data when IO is configured as output)** 0_B **0** Port 0 pin 4 data value = 0 1_B **1** Port 0 pin 4 data value = 1
PP3_STS	19	r	**Port 0 Pin 3 Data Value (read back of Port Data when IO is configured as output)** 0_B **0** Port 0 pin 3 data value = 0 1_B **1** Port 0 pin 3 data value = 1
PP2_STS	18	r	**Port 0 Pin 2 Data Value (read back of Port Data when IO is configured as output)** 0_B **0** Port 0 pin 2 data value = 0 1_B **1** Port 0 pin 2 data value = 1
PP1_STS	17	r	**Port 0 Pin 1 Data Value (read back of Port Data when IO is configured as output)** 0_B **0** Port 0 pin 1 data value = 0 1_B **1** Port 0 pin 1 data value = 1
PP0_STS	16	r	**Port 0 Pin 0 Data Value (read back of Port Data when IO is configured as output)** 0_B **0** Port 0 pin 0 data value = 0 1_B **1** Port 0 pin 0 data value = 1
RES	15:6	r	**Reserved** Returns 0 if read.
PP5	5	rwh	**Port 0 Pin 5 Data Value** 0_B **0** Port 0 pin 5 data value = 0 1_B **1** Port 0 pin 5 data value = 1
PP4	4	rwh	**Port 0 Pin 4 Data Value** 0_B **0** Port 0 pin 4 data value = 0 1_B **1** Port 0 pin 4 data value = 1
PP3	3	rwh	**Port 0 Pin 3 Data Value** 0_B **0** Port 0 pin 3 data value = 0 1_B **1** Port 0 pin 3 data value = 1
PP2	2	rwh	**Port 0 Pin 2 Data Value** 0_B **0** Port 0 pin 2 data value = 0 1_B **1** Port 0 pin 2 data value = 1
PP1	1	rwh	**Port 0 Pin 1 Data Value** 0_B **0** Port 0 pin 1 data value = 0 1_B **1** Port 0 pin 1 data value = 1
PP0	0	rwh	**Port 0 Pin 0 Data Value** 0_B **0** Port 0 pin 0 data value = 0 1_B **1** Port 0 pin 0 data value = 1

Table 213 RESET of P0_DATA

Register Reset Type	Reset Values	Reset Short Name	Reset Mode	Note
RESET_TYPE_3	$000000XX_H$	RESET_TYPE_3		

Direction Register

P0_DIR — **Offset** — **Reset Value**

Port 0 Direction Register — **04_H** — **see Table 214**

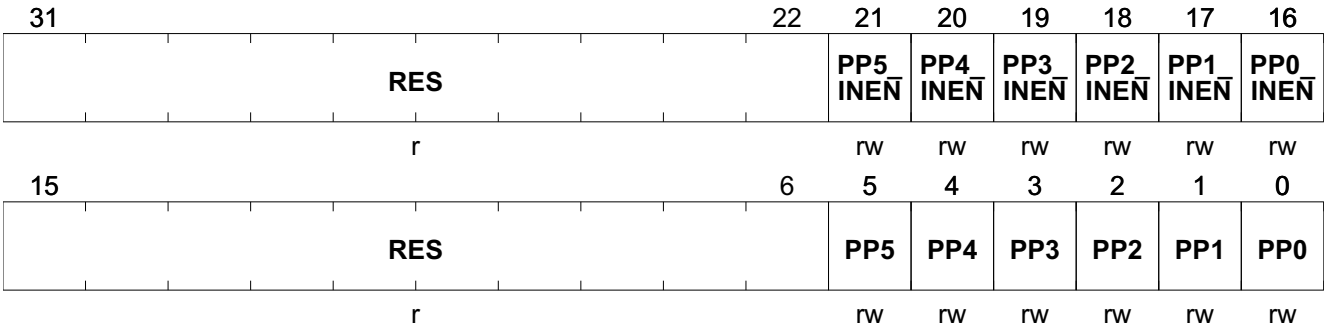

Field	Bits	Type	Description
RES	31:22	r	**Reserved** Returns 0 if read.
PP5_INEN	21	rw	**Port 0 Pin 5 Input Schmitt Trigger enable (only valid if IO is configured as output)** 0_B **0** Schmitt Trigger is disabled (default) 1_B **1** Schmitt Trigger is enabled
PP4_INEN	20	rw	**Port 0 Pin 4 Input Schmitt Trigger enable (only valid if IO is configured as output)** 0_B **0** Schmitt Trigger is disabled (default) 1_B **1** Schmitt Trigger is enabled
PP3_INEN	19	rw	**Port 0 Pin 3 Input Schmitt Trigger enable (only valid if IO is configured as output)** 0_B **0** Schmitt Trigger is disabled (default) 1_B **1** Schmitt Trigger is enabled
PP2_INEN	18	rw	**Port 0 Pin 2 Input Schmitt Trigger enable (only valid if IO is configured as output)** 0_B **0** Schmitt Trigger is disabled (default) 1_B **1** Schmitt Trigger is enabled
PP1_INEN	17	rw	**Port 0 Pin 1 Input Schmitt Trigger enable (only valid if IO is configured as output)** 0_B **0** Schmitt Trigger is disabled (default) 1_B **1** Schmitt Trigger is enabled

Field	Bits	Type	Description
PP0_INEN	16	rw	**Port 0 Pin 0 Input Schmitt Trigger enable (only valid if IO is configured as output)** 0_B **0** Schmitt Trigger is disabled (default) 1_B **1** Schmitt Trigger is enabled
RES	15:6	r	**Reserved** Returns 0 if read.
PP5	5	rw	**Port 0 Pin 5 Direction Control** 0_B **0** Direction is set to input (default) 1_B **1** Direction is set to output
PP4	4	rw	**Port 0 Pin 4 Direction Control** 0_B **0** Direction is set to input (default) 1_B **1** Direction is set to output
PP3	3	rw	**Port 0 Pin 3 Direction Control** 0_B **0** Direction is set to input (default) 1_B **1** Direction is set to output
PP2	2	rw	**Port 0 Pin 2 Direction Control** 0_B **0** Direction is set to input (default) 1_B **1** Direction is set to output
PP1	1	rw	**Port 0 Pin 1 Direction Control** 0_B **0** Direction is set to input (default) 1_B **1** Direction is set to output
PP0	0	rw	**Port 0 Pin 0 Direction Control** 0_B **0** Direction is set to input (default) 1_B **1** Direction is set to output

Table 214 RESET of P0_DIR

Register Reset Type	Reset Values	Reset Short Name	Reset Mode	Note
RESET_TYPE_3	00000000_H	RESET_TYPE_3		

Open Drain Control Register

P0_OD	Offset	Reset Value
Port 0 Open Drain Control Register	08_H	see Table 215

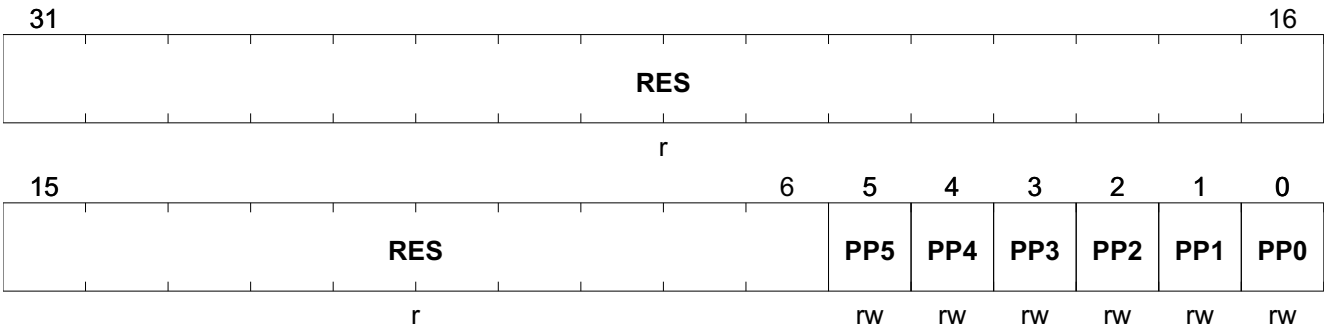

Field	Bits	Type	Description
RES	31:6	r	**Reserved** Returns 0 if read.
PP5	5	rw	**Port 0 Pin 5 Open Drain Mode** 0_B **Normal Mode** Output is actively driven for 0 and 1 state (default) 1_B **Open Drain Mode** Output is actively driven only for 0 state
PP4	4	rw	**Port 0 Pin 4 Open Drain Mode** 0_B **Normal Mode** Output is actively driven for 0 and 1 state (default) 1_B **Open Drain Mode** Output is actively driven only for 0 state
PP3	3	rw	**Port 0 Pin 3 Open Drain Mode** 0_B **Normal Mode** Output is actively driven for 0 and 1 state (default) 1_B **Open Drain Mode** Output is actively driven only for 0 state
PP2	2	rw	**Port 0 Pin 2 Open Drain Mode** 0_B **Normal Mode** Output is actively driven for 0 and 1 state (default) 1_B **Open Drain Mode** Output is actively driven only for 0 state
PP1	1	rw	**Port 0 Pin 1 Open Drain Mode** 0_B **Normal Mode** Output is actively driven for 0 and 1 state (default) 1_B **Open Drain Mode** Output is actively driven only for 0 state
PP0	0	rw	**Port 0 Pin 0 Open Drain Mode** 0_B **Normal Mode** Output is actively driven for 0 and 1 state (default) 1_B **Open Drain Mode** Output is actively driven only for 0 state

Table 215 RESET of P0_OD

Register Reset Type	Reset Values	Reset Short Name	Reset Mode	Note
RESET_TYPE_3	00000000_H	RESET_TYPE_3		

Port 0 Pull-Up/Pull-Down Select Register

P0_PUDSEL	Offset	Reset Value
Port 0 Pull-Up/Pull-Down Select Register	$0C_H$	see Table 216

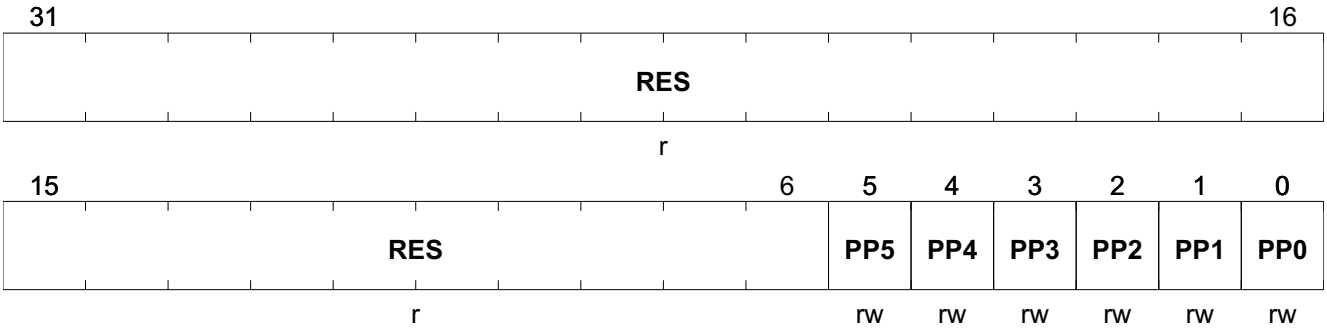

Field	Bits	Type	Description
RES	31:6	r	**Reserved** Returns 0 if read.
PP5	5	rw	**Pull-Up/Pull-Down Select Port 0 Bit 5** 0_B **Pull-down** Pull-down device is selected 1_B **Pull-up** Pull-up device is selected (default)
PP4	4	rw	**Pull-Up/Pull-Down Select Port 0 Bit 4** 0_B **Pull-down** Pull-down device is selected 1_B **Pull-up** Pull-up device is selected (default)
PP3	3	rw	**Pull-Up/Pull-Down Select Port 0 Bit 3** 0_B **Pull-down** Pull-down device is selected 1_B **Pull-up** Pull-up device is selected (default)
PP2	2	rw	**Pull-Up/Pull-Down Select Port 0 Bit 2** 0_B **Pull-down** Pull-down device is selected 1_B **Pull-up** Pull-up device is selected (default)
PP1	1	rw	**Pull-Up/Pull-Down Select Port 0 Bit 1** 0_B **Pull-down** Pull-down device is selected 1_B **Pull-up** Pull-up device is selected (default)
PP0	0	rw	**Pull-Up/Pull-Down Select Port 0 Bit 0** 0_B **Pull-down** Pull-down device is selected 1_B **Pull-up** Pull-up device is selected (default)

Table 216 RESET of P0_PUDSEL

Register Reset Type	Reset Values	Reset Short Name	Reset Mode	Note
RESET_TYPE_3	$0000003B_H$	RESET_TYPE_3		

Port 0 Pull-Up/Pull-Down Enable Register

P0_PUDEN	Offset	Reset Value
Port 0 Pull-Up/Pull-Down Enable Register	10_H	see Table 217

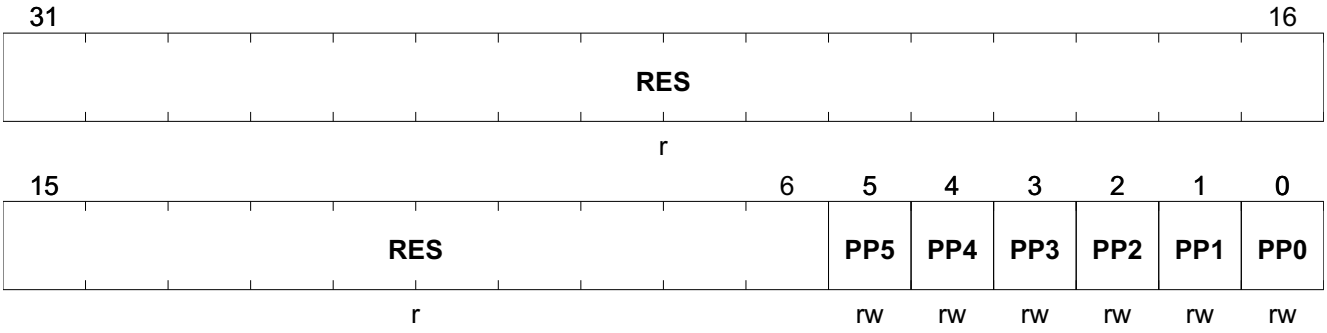

Field	Bits	Type	Description
RES	31:6	r	**Reserved** Returns 0 if read.
PP5	5	rw	**Pull-Up/Pull-Down Enable at Port 0 Bit 5** 0_B **Disabled** Pull-up or Pull-down device is disabled 1_B **Enabled** Pull-up or Pull-down device is enabled (default)
PP4	4	rw	**Pull-Up/Pull-Down Enable at Port 0 Bit 4** 0_B **Disabled** Pull-up or Pull-down device is disabled 1_B **Enabled** Pull-up or Pull-down device is enabled (default)
PP3	3	rw	**Pull-Up/Pull-Down Enable at Port 0 Bit 3** 0_B **Disabled** Pull-up or Pull-down device is disabled 1_B **Enabled** Pull-up or Pull-down device is enabled (default)
PP2	2	rw	**Pull-Up/Pull-Down Enable at Port 0 Bit 2** 0_B **Disabled** Pull-up or Pull-down device is disabled 1_B **Enabled** Pull-up or Pull-down device is enabled (default)
PP1	1	rw	**Pull-Up/Pull-Down Enable at Port 0 Bit 1** 0_B **Disabled** Pull-up or Pull-down device is disabled 1_B **Enabled** Pull-up or Pull-down device is enabled (default)
PP0	0	rw	**Pull-Up/Pull-Down Enable at Port 0 Bit 0** 0_B **Disabled** Pull-up or Pull-down device is disabled 1_B **Enabled** Pull-up or Pull-down device is enabled (default)

Table 217 RESET of P0_PUDEN

Register Reset Type	Reset Values	Reset Short Name	Reset Mode	Note
RESET_TYPE_3	$0000003F_H$	RESET_TYPE_3		

Alternate Output Select Register

P0_ALTSEL0	Offset	Reset Value
Port 0 Alternate Select Register 0	14_H	see Table 218

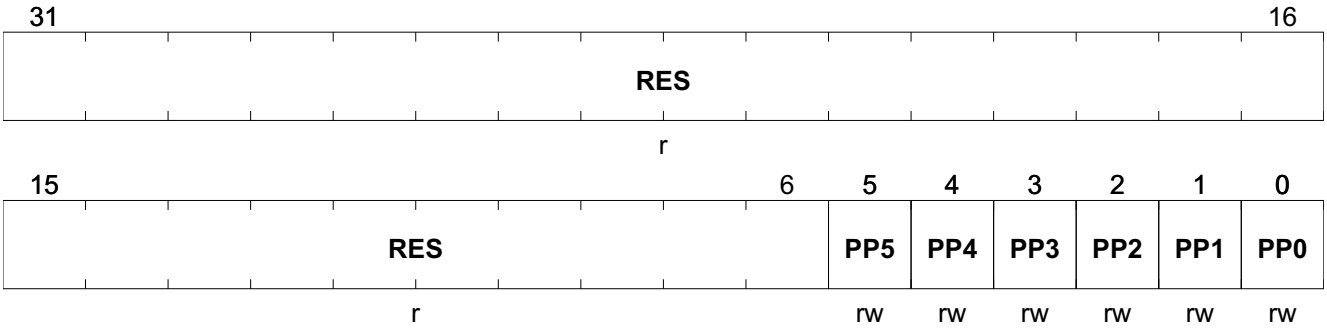

Field	Bits	Type	Description
RES	31:6	r	**Reserved** Returns 0 if read.
PP5	5	rw	**See Table 221**
PP4	4	rw	**See Table 221**
PP3	3	rw	**See Table 221**
PP2	2	rw	**See Table 221**
PP1	1	rw	**See Table 221**
PP0	0	rw	**See Table 221**

Table 218 RESET of P0_ALTSEL0

Register Reset Type	Reset Values	Reset Short Name	Reset Mode	Note
RESET_TYPE_3	00000000_H	RESET_TYPE_3		

Table 219 Function of Bits P0_ALTSEL0.PPn and P0_ALTSEL1.PPn

P0_ALTSEL0.PPn	P0_ALTSEL1.PPn	Function
0	0	Normal GPIO
1	0	Alternate Select 1
0	1	Alternate Select 2
1	1	Alternate Select 3

Alternate Output Select Register

P0_ALTSEL1	Offset	Reset Value
Port 0 Alternate Select Register 1	18_H	see Table 220

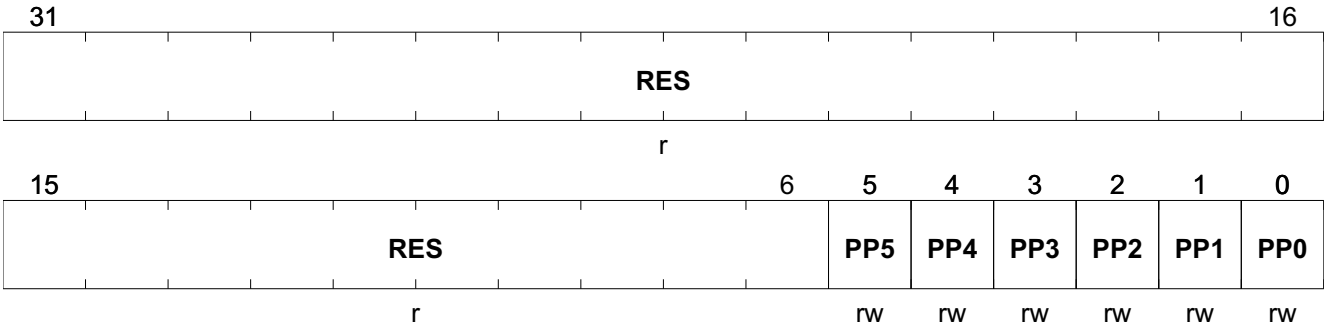

Field	Bits	Type	Description
RES	31:6	r	**Reserved** Returns 0 if read.
PP5	5	rw	**See Table 221**
PP4	4	rw	**See Table 221**
PP3	3	rw	**See Table 221**
PP2	2	rw	**See Table 221**
PP1	1	rw	**See Table 221**
PP0	0	rw	**See Table 221**

Table 220 RESET of P0_ALTSEL1

Register Reset Type	Reset Values	Reset Short Name	Reset Mode	Note
RESET_TYPE_3	00000000_H	RESET_TYPE_3		

Table 221 Function of Bits P0_ALTSEL0.PPn and P0_ALTSEL1.PPn

P0_ALTSEL0.PPn	P0_ALTSEL1.PPn	Function
0	0	Normal GPIO
1	0	Alternate Select 1
0	1	Alternate Select 2
1	1	Alternate Select 3

Port Output Control Register

SCU_P0_POCON0	Offset	Reset Value
Port Output Control Register	$0E8_H$	see Table 222

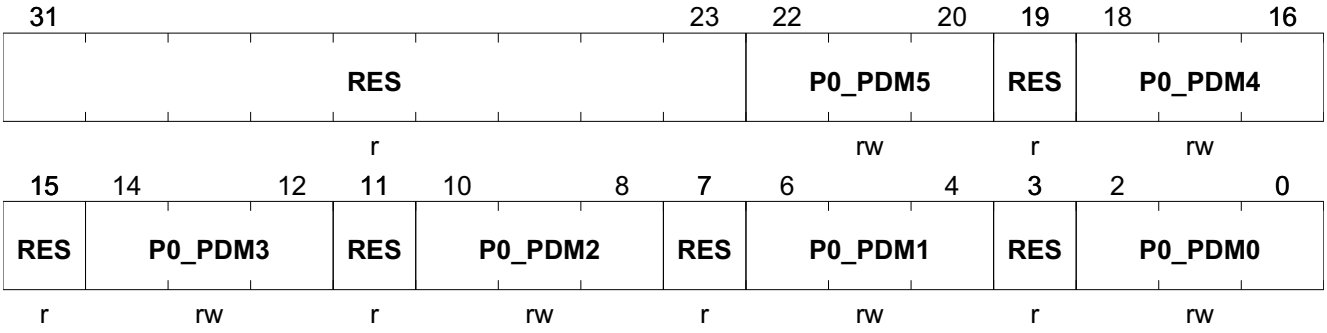

Field	Bits	Type	Description
RES	31:23	r	**Reserved** Returns 0 if read; should be written with 0.
P0_PDM5	22:20	rw	**P0.5 Port Driver Mode** Code Driver Strength[1] and Edge Shape[2] 000_B **Strong driver and sharp edge mode** 001_B **Strong driver and medium edge mode** 010_B **Strong driver and soft edge mode** 011_B **Weak Driver** 100_B **Medium Driver** 101_B **Medium Driver** 110_B **Medium Driver** 111_B **Weak Driver**
RES	19	r	**Reserved** Returns 0 if read; should be written with 0.
P0_PDM4	18:16	rw	**P0.4 Port Driver Mode** Code Driver Strength[1] and Edge Shape[2] 000_B **Strong driver and sharp edge mode** 001_B **Strong driver and medium edge mode** 010_B **Strong driver and soft edge mode** 011_B **Weak Driver** 100_B **Medium Driver** 101_B **Medium Driver** 110_B **Medium Driver** 111_B **Weak Driver**
RES	15	r	**Reserved** Returns 0 if read; should be written with 0.
P0_PDM3	14:12	rw	**P0.3 Port Driver Mode** Code Driver Strength[1] and Edge Shape[2] 000_B **Strong driver and sharp edge mode** 001_B **Strong driver and medium edge mode** 010_B **Strong driver and soft edge mode** 011_B **Weak Driver** 100_B **Medium Driver** 101_B **Medium Driver** 110_B **Medium Driver** 111_B **Weak Driver**

Field	Bits	Type	Description
RES	11	r	**Reserved** Returns 0 if read; should be written with 0.
P0_PDM2	10:8	rw	**P0.2 Port Driver Mode** Code Driver Strength[1] and Edge Shape[2] 000_B **Strong driver and sharp edge mode** 001_B **Strong driver and medium edge mode** 010_B **Strong driver and soft edge mode** 011_B **Weak Driver** 100_B **Medium Driver** 101_B **Medium Driver** 110_B **Medium Driver** 111_B **Weak Driver**
RES	7	r	**Reserved** Returns 0 if read; should be written with 0.
P0_PDM1	6:4	rw	**P0.1 Port Driver Mode** Code Driver Strength[1] and Edge Shape[2] 000_B **Medium Driver** 001_B **Not used** 010_B **Not used** 011_B **Weak Driver** 100_B **Medium Driver** 101_B **Medium Driver** 110_B **Medium Driver** 111_B **Weak Driver**
RES	3	r	**Reserved** Returns 0 if read; should be written with 0.
P0_PDM0	2:0	rw	**P0.0 Port Driver Mode** Code Driver Strength[1] and Edge Shape[2] 000_B **Medium Driver** 001_B **Not used** 010_B **Not used** 011_B **Weak Driver** 100_B **Medium Driver** 101_B **Medium Driver** 110_B **Medium Driver** 111_B **Weak Driver**

1) Defines the current the respective driver can deliver to the external circuitry.

2) Defines the switching characteristics to the respective new output driver. This also influences the peak currents through the driver when producing an edge, i.e. when changing the output level.

Table 222 RESET of SCU_P0_POCON0

Register Reset Type	Reset Values	Reset Short Name	Reset Mode	Note
RESET_TYPE_3	00000000_H	RESET_TYPE_3		

15.4.2 Port 1

15.4.2.1 Overview

Port 1 is a general purpose bidirectional port. The port registers of Port 1 are shown in Table 83.

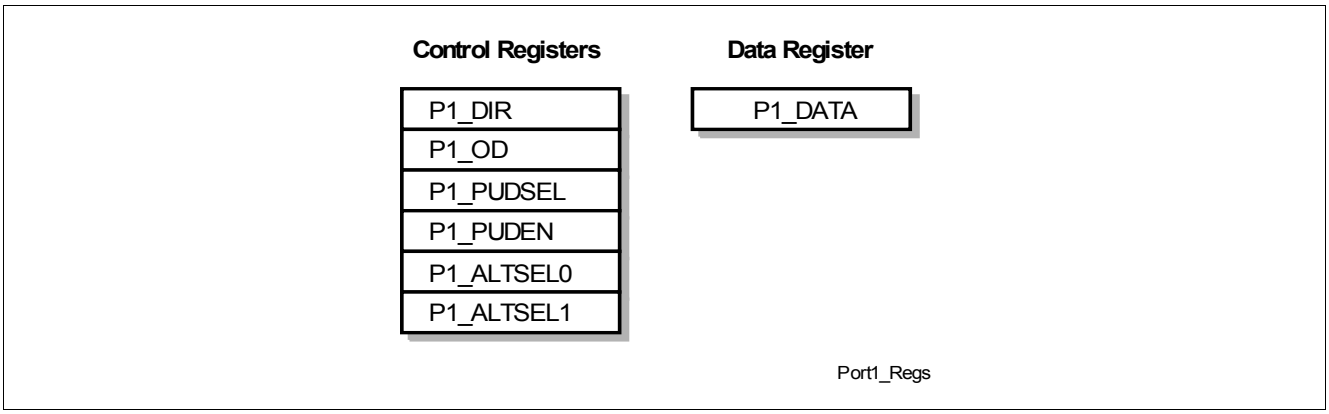

Figure 83 Port 1 Registers

Table 223 Port 1 Registers

Register Short Name	Register Long Name
P1_DATA	Port 1 Data Register
P1_DIR	Port 1 Direction Register
P1_OD	Port 1 Open Drain Control Register
P1_PUDSEL	Port 1 Pull-Up/Pull-Down Select Register
P1_PUDEN	Port 1 Pull-Up/Pull-Down Enable Register
P1_ALTSEL0	Port 1 Alternate Select Register 0
P1_ALTSEL1	Port 1 Alternate Select Register 1

15.4.2.2 Port 1 Functions

Port 1alternate function mapping according Table 224

Table 224 Port 1 Input / Output Functions

Port Pin	Input/Output	Select	Connected Signal(s)	From/to Module
P1.0	Input	GPI	P1_DATA.P0	
		INP1	T3INC	GPT12
		INP2	CC61_0	CCU6
		INP3	SSC2_S_SCK	SSC2
		INP4	T4EUDB	GPT12
	Output	GPO	P1_DATA.P0	
		ALT1	SSC2_M_SCK	SSC2
		ALT2	CC61_0	CCU6
		ALT3	UART2_TXD	UART2

Table 224 Port 1 Input / Output Functions (cont'd)

Port Pin	Input/Output	Select	Connected Signal(s)	From/to Module
P1.1	Input	GPI	P1_DATA.P1	
		INP1	T6EUDA	GPT12
		INP2	T5INB	GPT12
		INP3	T3EUDC	GPT12
		INP4	SSC2_S_MTSR	SSC2
		INP5	T21EX_3	Timer 21
		INP6	UART2_RXD	UART2
	Output	GPO	P1_DATA.P1	
		ALT1	SSC2_M_MTSR	SSC2
		ALT2	COUT61_0	CCU6
		ALT3	EXF21_1	Timer 21
P1.2	Input	GPI	P1_DATA.P2	
		INP1	EXINT0_1	SCU
		INP2	T21_1	Timer 21
		INP3	T2INA	GPT12
		INP4	SSC2_M_MRST	SSC2
		INP5	CCPOS2_2	CCU6
	Output	GPO	P1_DATA.P2	
		ALT1	SSC2_S_MRST	SSC2
		ALT2	COUT63_0	CCU6
		ALT3	T3OUT_1	GPT12
P1.4	Input	GPI	P1_DATA.P4	
		INP1	EXINT2_1	SCU
		INP2	T21EX_1	Timer 21
		INP3	T2INB	GPT12
		INP4	T5EUDA	GPT12
		INP5	SSC12_S_MTSR	SSC1/2
		INP6	CCPOS1_2	CCU6
	Output	GPO	P1_DATA.P4	
		ALT1	CLKOUT_1	SCU
		ALT2	COUT62_0	CCU6
		ALT3	SSC12_M_MTSR	SSC1/2

15.4.2.3 Port 1 Register Description

Table 225 Register Overview

Register Short Name	Register Long Name	Offset Address	Reset Value
Port 1 Register Description,			
P1_DATA	Port 1 Data Register	20_H	$000000XX_H$
P1_DIR	Port 1 Direction Register	24_H	00000000_H
P1_OD	Port 1 Open Drain Control Register	28_H	00000000_H
P1_PUDSEL	Port 1 Pull-Up/Pull-Down Select Register	$2C_H$	00000017_H
P1_PUDEN	Port 1 Pull-Up/Pull-Down Enable Register	30_H	00000000_H
P1_ALTSEL0	Port 1 Alternate Select Register 0	34_H	00000000_H
P1_ALTSEL1	Port 1 Alternate Select Register 1	38_H	00000000_H
SCU_P1_POCON0	Port Output Control Register	$0F8_H$	00000000_H

The registers are addressed wordwise.

Data Register

P1_DATA	Offset	Reset Value
Port 1 Data Register	20_H	see Table 226

31	21	20	19	18	17	16
RES		PP4_STS	RES	PP2_STS	PP1_STS	PP0_STS
r		rwh	r	rwh	rwh	rwh

15	5	4	3	2	1	0
RES		PP4	RES	PP2	PP1	PP0
r		rwh	r	rwh	rwh	rwh

Field	Bits	Type	Description
RES	31:21	r	**Reserved** Returns 0 if read.
PP4_STS	20	rwh	**Port 1 Pin 4 Data Value (read back of Port Data when IO is configured as output)** 0_B **0** Port 1 pin 4 data value = 0 1_B **1** Port 1 pin 4 data value = 1
RES	19	r	**Reserved** Returns 0 if read.

Field	Bits	Type	Description
PP2_STS	18	rwh	**Port 1 Pin 2 Data Value (read back of Port Data when IO is configured as output)** 0_B **0** Port 1 pin 2 data value = 0 1_B **1** Port 1 pin 2 data value = 1
PP1_STS	17	rwh	**Port 1 Pin 1 Data Value (read back of Port Data when IO is configured as output)** 0_B **0** Port 1 pin 1 data value = 0 1_B **1** Port 1 pin 1 data value = 1
PP0_STS	16	rwh	**Port 1 Pin 0 Data Value (read back of Port Data when IO is configured as output)** 0_B **0** Port 1 pin 0 data value = 0 1_B **1** Port 1 pin 0 data value = 1
RES	15:5	r	**Reserved** Returns 0 if read.
PP4	4	rwh	**Port 1 Pin 4 Data Value** 0_B **0** Port 1 pin 4 data value = 0 1_B **1** Port 1 pin 4 data value = 1
RES	3	r	**Reserved** Returns 0 if read.
PP2	2	rwh	**Port 1 Pin 2 Data Value** 0_B **0** Port 1 pin 2 data value = 0 1_B **1** Port 1 pin 2 data value = 1
PP1	1	rwh	**Port 1 Pin 1 Data Value** 0_B **0** Port 1 pin 1 data value = 0 1_B **1** Port 1 pin 1 data value = 1
PP0	0	rwh	**Port 1 Pin 0 Data Value** 0_B **0** Port 1 pin 0 data value = 0 1_B **1** Port 1 pin 0 data value = 1

Table 226 RESET of P1_DATA

Register Reset Type	Reset Values	Reset Short Name	Reset Mode	Note
RESET_TYPE_3	$000000XX_H$	RESET_TYPE_3		

Direction Register

P1_DIR	Offset	Reset Value
Port 1 Direction Register	**24_H**	**see Table 227**

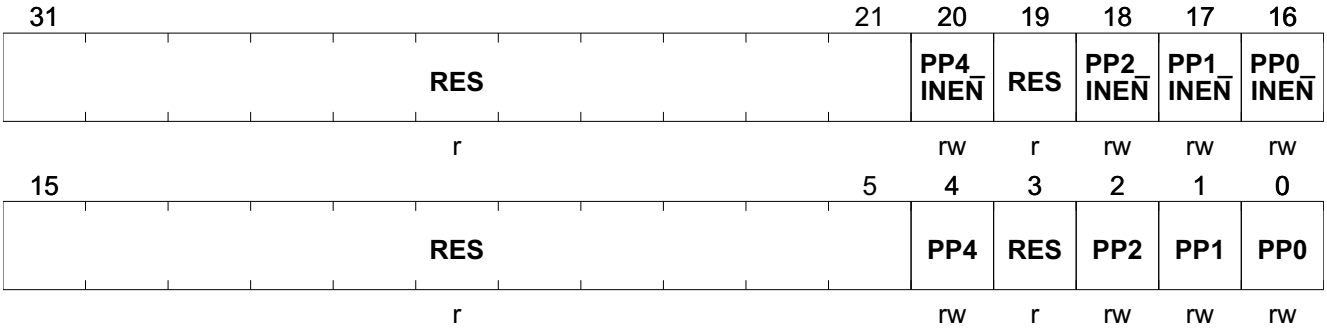

Field	Bits	Type	Description
RES	31:21	r	**Reserved** Returns 0 if read.
PP4_INEN	20	rw	**Port 1 Pin 4 Input Schmitt Trigger enable (only valid if IO is configured as output)** 0_B **0** Schmitt Trigger is disabled (default) 1_B **1** Schmitt Trigger is enabled
RES	19	r	**Reserved** Returns 0 if read.
PP2_INEN	18	rw	**Port 1 Pin 2 Input Schmitt Trigger enable (only valid if IO is configured as output)** 0_B **0** Schmitt Trigger is disabled (default) 1_B **1** Schmitt Trigger is enabled
PP1_INEN	17	rw	**Port 1 Pin 1 Input Schmitt Trigger enable (only valid if IO is configured as output)** 0_B **0** Schmitt Trigger is disabled (default) 1_B **1** Schmitt Trigger is enabled
PP0_INEN	16	rw	**Port 1 Pin 0 Input Schmitt Trigger enable (only valid if IO is configured as output)** 0_B **0** Schmitt Trigger is disabled (default) 1_B **1** Schmitt Trigger is enabled
RES	15:5	r	**Reserved** Returns 0 if read.
PP4	4	rw	**Port 1 Pin 4 Direction Control** 0_B **Input** Direction is set to input (default) 1_B **Output** Direction is set to output
RES	3	r	**Reserved** Returns 0 if read.
PP2	2	rw	**Port 1 Pin 2 Direction Control** 0_B **Input** Direction is set to input (default) 1_B **Output** Direction is set to output
PP1	1	rw	**Port 1 Pin 1 Direction Control** 0_B **Input** Direction is set to input (default) 1_B **Output** Direction is set to output

Field	Bits	Type	Description
PP0	0	rw	**Port 1 Pin 0 Direction Control** 0_B **Input** Direction is set to input (default) 1_B **Output** Direction is set to output

Table 227 RESET of P1_DIR

Register Reset Type	Reset Values	Reset Short Name	Reset Mode	Note
RESET_TYPE_3	00000000_H	RESET_TYPE_3		

Open Drain Control Register

P1_OD	Offset	Reset Value
Port 1 Open Drain Control Register	28_H	see Table 228

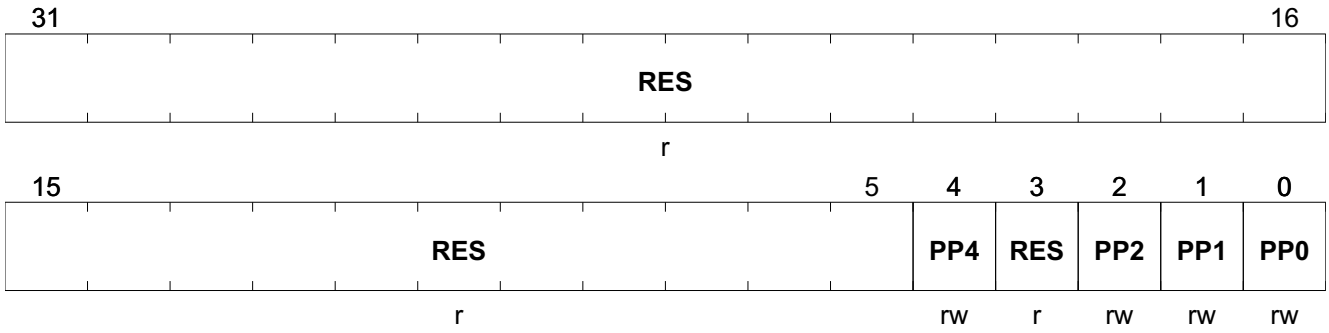

Field	Bits	Type	Description
RES	31:5	r	**Reserved** Returns 0 if read.
PP4	4	rw	**Port 1 Pin 4 Open Drain Mode** 0_B **Normal Mode** Output is actively driven for 0 and 1 state (default) 1_B **Open Drain Mode** Output is actively driven only for 0 state
RES	3	r	**Reserved** Returns 0 if read.
PP2	2	rw	**Port 1 Pin 2 Open Drain Mode** 0_B **Normal Mode** Output is actively driven for 0 and 1 state (default) 1_B **Open Drain Mode** Output is actively driven only for 0 state
PP1	1	rw	**Port 1 Pin 1 Open Drain Mode** 0_B **Normal Mode** Output is actively driven for 0 and 1 state (default) 1_B **Open Drain Mode** Output is actively driven only for 0 state

Field	Bits	Type	Description
PP0	0	rw	**Port 1 Pin 0 Open Drain Mode** 0_B **Normal Mode** Output is actively driven for 0 and 1 state (default) 1_B **Open Drain Mode** Output is actively driven only for 0 state

Table 228 RESET of P1_OD

Register Reset Type	Reset Values	Reset Short Name	Reset Mode	Note
RESET_TYPE_3	00000000_H	RESET_TYPE_3		

Pull-Up/Pull-Down Device Register

P1_PUDSEL — **Offset** — **Reset Value**

Port 1 Pull-Up/Pull-Down Select Register — **$2C_H$** — **see Table 229**

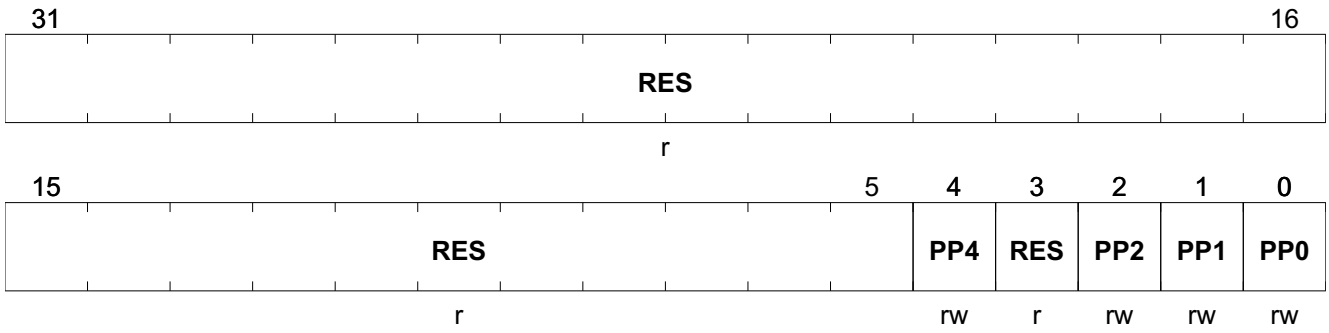

Field	Bits	Type	Description
RES	31:5	r	**Reserved** Returns 0 if read.
PP4	4	rw	**Pull-Up/Pull-Down Select Port 1 Bit 4** 0_B **Pull-down** Pull-down device is selected 1_B **Pull-up** Pull-up device is selected (default)
RES	3	r	**Reserved** Returns 0 if read.
PP2	2	rw	**Pull-Up/Pull-Down Select Port 1 Bit 2** 0_B **Pull-down** Pull-down device is selected 1_B **Pull-up** Pull-up device is selected (default)
PP1	1	rw	**Pull-Up/Pull-Down Select Port 1 Bit 1** 0_B **Pull-down** Pull-down device is selected 1_B **Pull-up** Pull-up device is selected (default)
PP0	0	rw	**Pull-Up/Pull-Down Select Port 1 Bit 0** 0_B **Pull-down** Pull-down device is selected 1_B **Pull-up** Pull-up device is selected (default)

Table 229 RESET of P1_PUDSEL

Register Reset Type	Reset Values	Reset Short Name	Reset Mode	Note
RESET_TYPE_3	00000017_H	RESET_TYPE_3		

Port 1 Pull-Up/Pull-Down Enable Register

P1_PUDEN	Offset	Reset Value
Port 1 Pull-Up/Pull-Down Enable Register	30_H	see Table 230

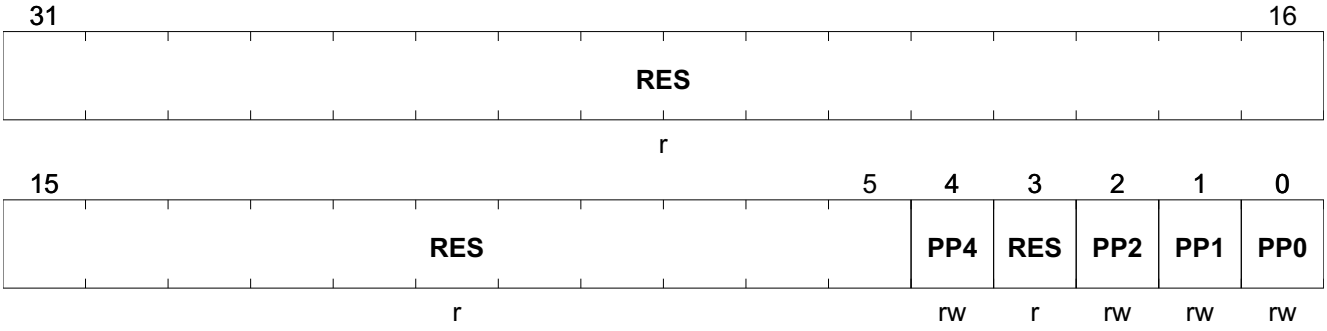

Field	Bits	Type	Description
RES	31:5	r	**Reserved** Returns 0 if read.
PP4	4	rw	**Pull-Up/Pull-Down Enable at Port 1 Bit 4** 0_B **Disabled** Pull-up or Pull-down device is disabled (default) 1_B **Enabled** Pull-up or Pull-down device is enabled
RES	3	r	**Reserved** Returns 0 if read.
PP2	2	rw	**Pull-Up/Pull-Down Enable at Port 1 Bit 2** 0_B **Disabled** Pull-up or Pull-down device is disabled (default) 1_B **Enabled** Pull-up or Pull-down device is enabled
PP1	1	rw	**Pull-Up/Pull-Down Enable at Port 1 Bit 1** 0_B **Disabled** Pull-up or Pull-down device is disabled (default) 1_B **Enabled** Pull-up or Pull-down device is enabled
PP0	0	rw	**Pull-Up/Pull-Down Enable at Port 1 Bit 0** 0_B **Disabled** Pull-up or Pull-down device is disabled (default) 1_B **Enabled** Pull-up or Pull-down device is enabled

Table 230 RESET of P1_PUDEN

Register Reset Type	Reset Values	Reset Short Name	Reset Mode	Note
RESET_TYPE_3	00000000_H	RESET_TYPE_3		

Alternate Output Select Register

P1_ALTSEL0	Offset	Reset Value
Port 1 Alternate Select Register 0	34_H	see Table 231

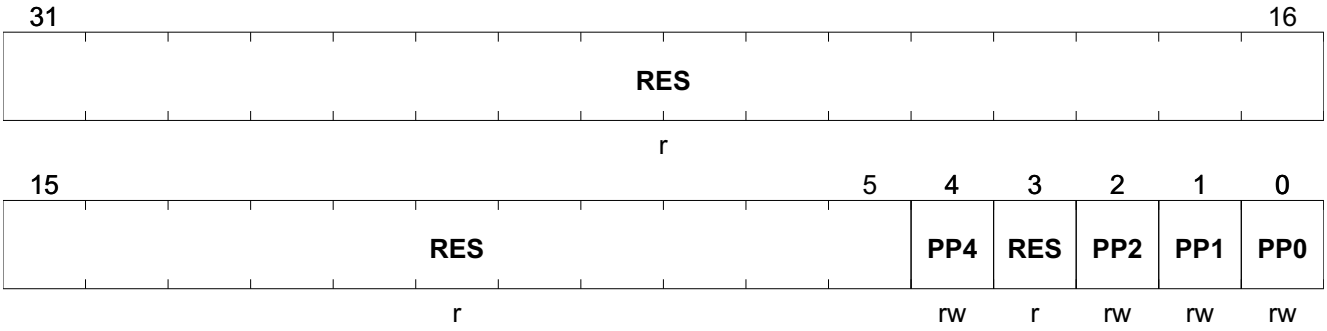

Field	Bits	Type	Description
RES	31:5	r	**Reserved** Returns 0 if read.
PP4	4	rw	**See Table 234**
RES	3	r	**Reserved** Returns 0 if read.
PP2	2	rw	**See Table 234**
PP1	1	rw	**See Table 234**
PP0	0	rw	**See Table 234**

Table 231 RESET of P1_ALTSEL0

Register Reset Type	Reset Values	Reset Short Name	Reset Mode	Note
RESET_TYPE_3	00000000_H	RESET_TYPE_3		

Table 232 Function of Bits P1_ALTSEL0.PPn and P1_ALTSEL1.PPn

P1_ALTSEL0.PPn	P1_ALTSEL1.PPn	Function
0	0	Normal GPIO
1	0	Alternate Select 1
0	1	Alternate Select 2
1	1	Alternate Select 3

Alternate Output Select Register

P1_ALTSEL1	Offset	Reset Value
Port 1 Alternate Select Register 1	38_H	see Table 233

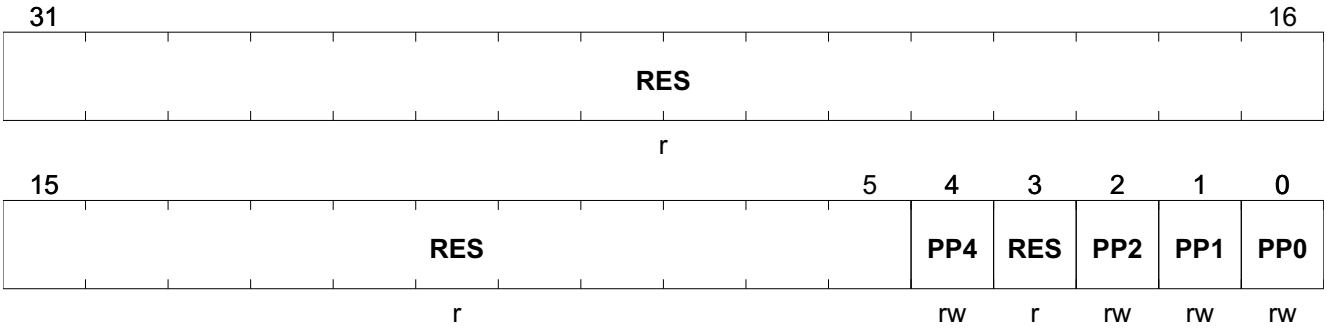

Field	Bits	Type	Description
RES	31:5	r	**Reserved** Returns 0 if read.
PP4	4	rw	**See Table 234**
RES	3	r	**Reserved** Returns 0 if read.
PP2	2	rw	**See Table 234**
PP1	1	rw	**See Table 234**
PP0	0	rw	**See Table 234**

Table 233 RESET of P1_ALTSEL1

Register Reset Type	Reset Values	Reset Short Name	Reset Mode	Note
RESET_TYPE_3	00000000_H	RESET_TYPE_3		

Table 234 Function of Bits P1_ALTSEL0.PPn and P1_ALTSEL1.PPn

P1_ALTSEL0.PPn	P1_ALTSEL1.PPn	Function
0	0	Normal GPIO
1	0	Alternate Select 1
0	1	Alternate Select 2
1	1	Alternate Select 3

Port Output Control Register

SCU_P1_POCON0	Offset	Reset Value
Port Output Control Register	$0F8_H$	see Table 235

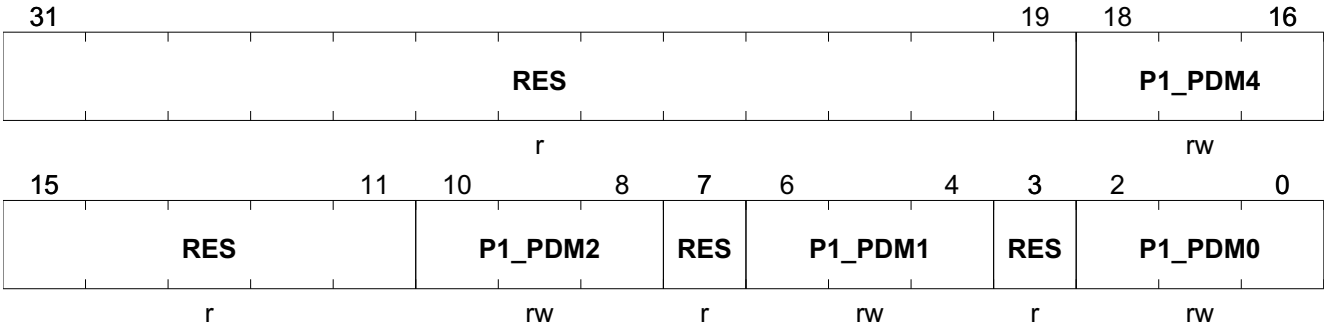

Field	Bits	Type	Description
RES	31:19	r	**Reserved** Returns 0 if read; should be written with 0.
P1_PDM4	18:16	rw	**P1.4 Port Driver Mode** Code Driver Strength[1] and Edge Shape[2] 000_B **Strong driver and sharp edge mode** 001_B **Strong driver and medium edge mode** 010_B **Strong driver and soft edge mode** 011_B **Weak Driver** 100_B **Medium Driver** 101_B **Medium Driver** 110_B **Medium Driver** 111_B **Weak Driver**
RES	15:11	r	**Reserved** Returns 0 if read; should be written with 0.
P1_PDM2	10:8	rw	**P1.2 Port Driver Mode** Code Driver Strength[1] and Edge Shape[2] 000_B **Medium Driver** 001_B **Not used** 010_B **Not used** 011_B **Weak Driver** 100_B **Medium Driver** 101_B **Medium Driver** 110_B **Medium Driver** 111_B **Weak Driver**
RES	7	r	**Reserved** Returns 0 if read; should be written with 0.

Field	Bits	Type	Description
P1_PDM1	6:4	rw	**P1.1 Port Driver Mode** Code Driver Strength[1] and Edge Shape[2] 000_B **Medium Driver** 001_B **Not used** 010_B **Not used** 011_B **Weak Driver** 100_B **Medium Driver** 101_B **Medium Driver** 110_B **Medium Driver** 111_B **Weak Driver**
RES	3	r	**Reserved** Returns 0 if read; should be written with 0.
P1_PDM0	2:0	rw	**P1.0 Port Driver Mode** Code Driver Strength[1] and Edge Shape[2] 000_B **Medium Driver** 001_B **Not used** 010_B **Not used** 011_B **Weak Driver** 100_B **Medium Driver** 101_B **Medium Driver** 110_B **Medium Driver** 111_B **Weak Driver**

1) Defines the current the respective driver can deliver to the external circuitry.

2) Defines the switching characteristics to the respective new output driver. This also influences the peak currents through the driver when producing an edge, i.e. when changing the output level.

Table 235 RESET of SCU_P1_POCON0

Register Reset Type	Reset Values	Reset Short Name	Reset Mode	Note
RESET_TYPE_3	00000000_H	RESET_TYPE_3		

15.4.3 Port 2

15.4.3.1 Overview

Port 2 is a general purpose input-only port. The port registers of Port 2 are shown in **Table 84**.

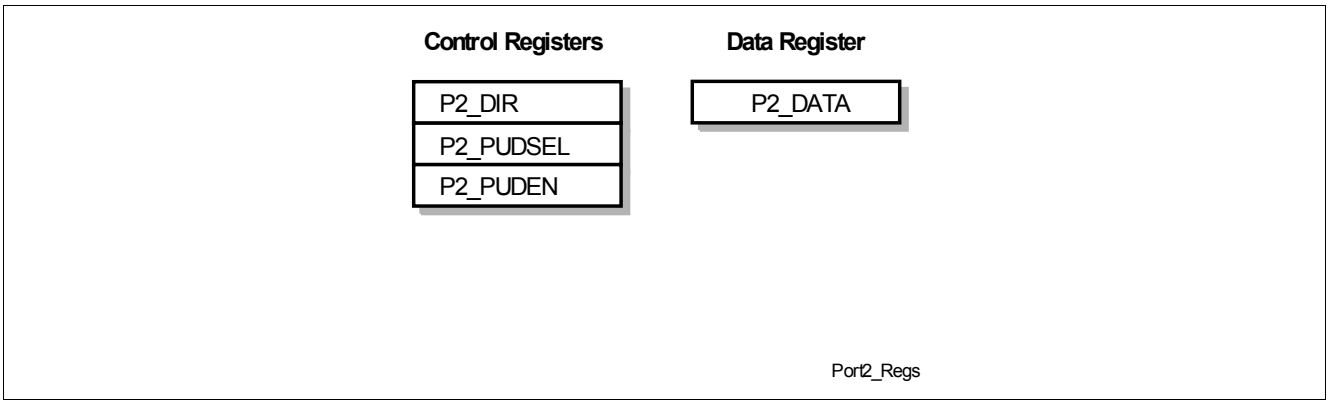

Figure 84 Port 2 Registers

Table 236 Port 2 Registers

Register Short Name	Register Long Name
P2_DATA	Port 2 Data Register
P2_DIR	Port 2 Direction Register
P2_PUDSEL	Port 2 Pull-Up/Pull-Down Select Register
P2_PUDEN	Port 2 Pull-Up/Pull-Down Enable Register

15.4.3.2 Port 2 Functions

Port 2 alternate function mapping according **Table 237**

Table 237 Port 2 Input Functions

Port Pin	Input/Output	Select	Connected Signal(s)	From/to Module
P2.0	Input	GPI	P2_DATA.P0	
		INP1	EXINT1_1	SCU
		INP2	CCPOS0_2	CCU6
		INP3	T5EUDB	GPT12
		ANALOG	AN0	ADC
P2.1	Input	GPI	P2_DATA.P1	
		INP1	CCPOS0_0	CCU6
		INP2	EXINT1_0	SCU
		INP3	T12HR_1	CCU6
		INP4	CC61_1	CCU6
		ANALOG	AN1	ADC

Table 237 Port 2 Input Functions (cont'd)

Port Pin	Input/Output	Select	Connected Signal(s)	From/to Module
P2.2	Input	GPI	P2_DATA.P2	
		INP1	T6EUDB	GPT12
		INP2	T2EX_0	Timer 2
		INP3	T12HR_2	CCU6
		ANALOG	AN2	ADC
P2.3	Input	GPI	P2_DATA.P3	
		INP1	CCPOS1_0	CCU6
		INP2	EXINT0_2	SCU
		INP3	CTRAP_1	CCU6
		INP4	T3IND	GPT12
		INP5	CC60_1	CCU6
		ANALOG	AN3	ADC
P2.4	Input	GPI	P2_DATA.P4	
		INP1	T2EUDB	GPT12
		INP2	T2_2	Timer 2
		INP3	T2EX_2	Timer 2
		INP4	CCPOS0_3	CCU6
		INP5	CTRAP_2	CCU6
		IN	XTAL (in)[1)]	XTAL
P2.5	Input / Output	GPI	P2_DATA.P5	
		INP1	T3EUDB	GPT12
		INP2	T4EUDC	GPT12
		INP3	T2_1	Timer 2
		INP4	LIN_TXD	LIN
		INP5	CCPOS1_3	CCU6
		OUT	XTAL (out)[1)]	XTAL
P2.6	Input	GPI	P2_DATA.P6	
		INP1	T4EUDD	GPT12
		INP2	T2EX_3	Timer 2
		INP3	CCPOS2_3	CCU6
		INP4	T13HR_2	CCU6
		ANALOG	AN6	ADC
P2.7	Input	GPI	P2_DATA.P7	
		INP1	CCPOS2_0	CCU6
		INP2	EXINT2_0	SCU
		INP3	T13HR_1	CCU6
		INP4	CC62_1	CCU6
		ANALOG	AN7	ADC

1) configurable by user

15.4.3.3 Port 2 Register Description

Table 238 Register Overview

Register Short Name	Register Long Name	Offset Address	Reset Value
Port 2 Register Description,			
P2_DATA	Port 2 Data Register	40_H	$000000XX_H$
P2_DIR	Port 2 Direction Register	44_H	00000000_H
P2_PUDSEL	Port 2 Pull-Up/Pull-Down Select Register	$4C_H$	00000000_H
P2_PUDEN	Port 2 Pull-Up/Pull-Down Enable Register	50_H	00000000_H

The registers are addressed wordwise.

Data Register

P2_DATA	**Offset**	**Reset Value**
Port 2 Data Register	**40_H**	**see Table 239**

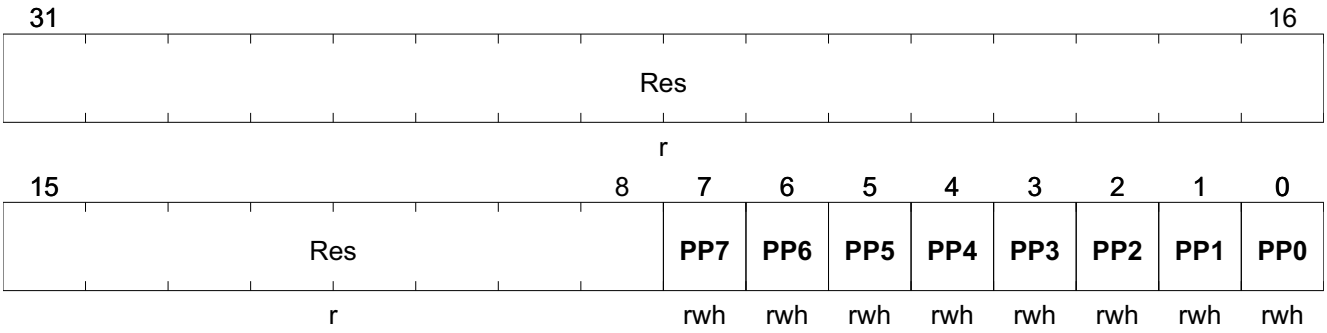

Field	Bits	Type	Description
Res	31:8	r	**Reserved** Always read as 0
PP7	7	rwh	**Port 2 Pin 7 Data Value** 0_B **0** Port 2 pin 7 data value = 0 1_B **1** Port 2 pin 7 data value = 1
PP6	6	rwh	**Port 2 Pin 6 Data Value** 0_B **0** Port 2 pin 6 data value = 0 1_B **1** Port 2 pin 6 data value = 1
PP5	5	rwh	**Port 2 Pin 5 Data Value** 0_B **0** Port 2 pin 5 data value = 0 1_B **1** Port 2 pin 5 data value = 1

Field	Bits	Type	Description
PP4	4	rwh	**Port 2 Pin 4 Data Value** 0_B **0** Port 2 pin 4 data value = 0 1_B **1** Port 2 pin 4 data value = 1
PP3	3	rwh	**Port 2 Pin 3 Data Value** 0_B **0** Port 2 pin 3 data value = 0 1_B **1** Port 2 pin 3 data value = 1
PP2	2	rwh	**Port 2 Pin 2 Data Value** 0_B **0** Port 2 pin 2 data value = 0 1_B **1** Port 2 pin 2 data value = 1
PP1	1	rwh	**Port 2 Pin 1 Data Value** 0_B **0** Port 2 pin 1 data value = 0 1_B **1** Port 2 pin 1 data value = 1
PP0	0	rwh	**Port 2 Pin 0 Data Value** 0_B **0** Port 2 pin 0 data value = 0 1_B **1** Port 2 pin 0 data value = 1

Table 239 RESET of P2_DATA

Register Reset Type	Reset Values	Reset Short Name	Reset Mode	Note
RESET_TYPE_3	$000000XX_H$	RESET_TYPE_3		

Direction Register

P2_DIR **Offset** **Reset Value**

Port 2 Direction Register **44_H** **see Table 240**

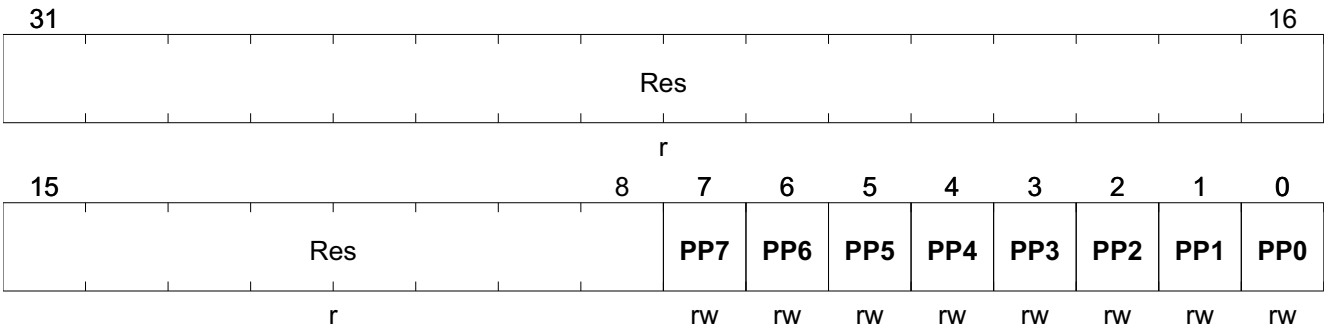

Field	Bits	Type	Description
Res	31:8	r	**Reserved** Always read as 0
PP7	7	rw	**Port 2 Pin 7 Driver Control** 0_B **Enabled** Input driver is enabled 1_B **Disabled** Input driver is disabled (default)
PP6	6	rw	**Port 2 Pin 6 Driver Control** 0_B **Enabled** Input driver is enabled 1_B **Disabled** Input driver is disabled (default)

Field	Bits	Type	Description
PP5	5	rw	**Port 2 Pin 5 Driver Control** 0_B **Enabled** Input driver is enabled 1_B **Disabled** Input driver is disabled (default)
PP4	4	rw	**Port 2 Pin 4 Driver Control** 0_B **Enabled** Input driver is enabled 1_B **Disabled** Input driver is disabled (default)
PP3	3	rw	**Port 2 Pin 3 Driver Control** 0_B **Enabled** Input driver is enabled 1_B **Disabled** Input driver is disabled (default)
PP2	2	rw	**Port 2 Pin 2 Driver Control** 0_B **Enabled** Input driver is enabled 1_B **Disabled** Input driver is disabled (default)
PP1	1	rw	**Port 2 Pin 1 Driver Control** 0_B **Enabled** Input driver is enabled 1_B **Disabled** Input driver is disabled (default)
PP0	0	rw	**Port 2 Pin 0 Driver Control** 0_B **Enabled** Input driver is enabled 1_B **Disabled** Input driver is disabled (default)

Table 240 RESET of P2_DIR

Register Reset Type	Reset Values	Reset Short Name	Reset Mode	Note
RESET_TYPE_3	00000000_H	RESET_TYPE_3		

Pull-Up/Pull-Down Device Register

P2_PUDSEL — **Offset** — **Reset Value**

Port 2 Pull-Up/Pull-Down Select Register — **$4C_H$** — **see Table 241**

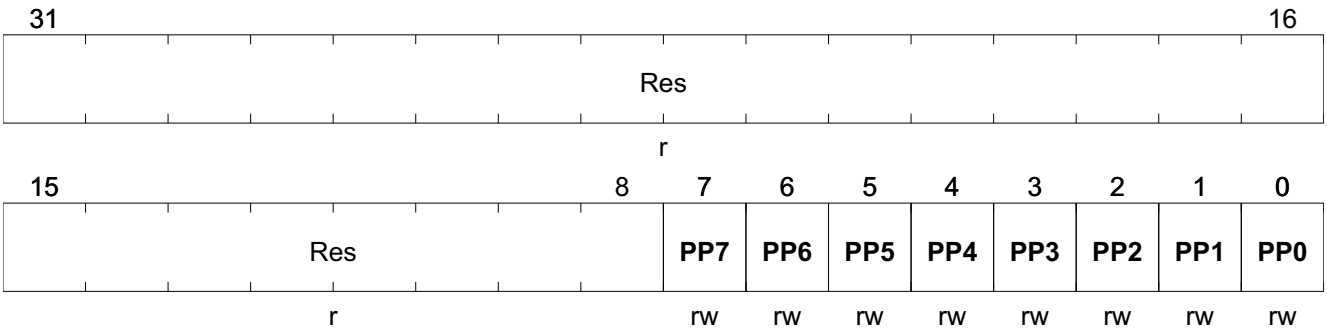

Field	Bits	Type	Description
Res	31:8	r	**Reserved** Always read as 0
PP7	7	rw	**Pull-Up/Pull-Down Select Port 2 Bit 7** 0_B **Pull-down** Pull-down device is selected 1_B **Pull-up** Pull-up device is selected (default)

Field	Bits	Type	Description
PP6	6	rw	**Pull-Up/Pull-Down Select Port 2 Bit 6** 0_B **Pull-down** Pull-down device is selected 1_B **Pull-up** Pull-up device is selected (default)
PP5	5	rw	**Pull-Up/Pull-Down Select Port 2 Bit 5** 0_B **Pull-down** Pull-down device is selected 1_B **Pull-up** Pull-up device is selected (default)
PP4	4	rw	**Pull-Up/Pull-Down Select Port 2 Bit 4** 0_B **Pull-down** Pull-down device is selected 1_B **Pull-up** Pull-up device is selected (default)
PP3	3	rw	**Pull-Up/Pull-Down Select Port 2 Bit 3** 0_B **Pull-down** Pull-down device is selected 1_B **Pull-up** Pull-up device is selected (default)
PP2	2	rw	**Pull-Up/Pull-Down Select Port 2 Bit 2** 0_B **Pull-down** Pull-down device is selected 1_B **Pull-up** Pull-up device is selected (default)
PP1	1	rw	**Pull-Up/Pull-Down Select Port 2 Bit 1** 0_B **Pull-down** Pull-down device is selected 1_B **Pull-up** Pull-up device is selected (default)
PP0	0	rw	**Pull-Up/Pull-Down Select Port 2 Bit 0** 0_B **Pull-down** Pull-down device is selected 1_B **Pull-up** Pull-up device is selected (default)

Table 241 RESET of P2_PUDSEL

Register Reset Type	Reset Values	Reset Short Name	Reset Mode	Note
RESET_TYPE_3	00000000_H	RESET_TYPE_3		

Pull-Up/Pull-Down Enable Register

P2_PUDEN	Offset	Reset Value
Port 2 Pull-Up/Pull-Down Enable Register	50_H	see Table 242

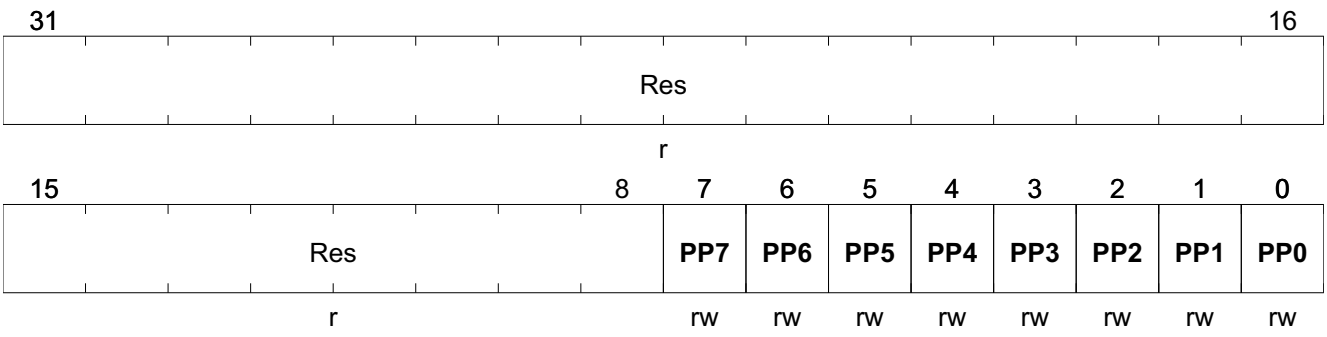

Field	Bits	Type	Description
Res	31:8	r	**Reserved** Always read as 0

Field	Bits	Type	Description
PP7	7	rw	**Pull-Up/Pull-Down Enable at Port 2 Bit 7** 0_B **Disabled** Pull-up or Pull-down device is disabled (default) 1_B **Enabled** Pull-up or Pull-down device is enabled
PP6	6	rw	**Pull-Up/Pull-Down Enable at Port 2 Bit 6** 0_B **Disabled** Pull-up or Pull-down device is disabled (default) 1_B **Enabled** Pull-up or Pull-down device is enabled
PP5	5	rw	**Pull-Up/Pull-Down Enable at Port 2 Bit 5** 0_B **Disabled** Pull-up or Pull-down device is disabled (default) 1_B **Enabled** Pull-up or Pull-down device is enabled
PP4	4	rw	**Pull-Up/Pull-Down Enable at Port 2 Bit 4** 0_B **Disabled** Pull-up or Pull-down device is disabled (default) 1_B **Enabled** Pull-up or Pull-down device is enabled
PP3	3	rw	**Pull-Up/Pull-Down Enable at Port 2 Bit 3** 0_B **Disabled** Pull-up or Pull-down device is disabled (default) 1_B **Enabled** Pull-up or Pull-down device is enabled
PP2	2	rw	**Pull-Up/Pull-Down Enable at Port 2 Bit 2** 0_B **Disabled** Pull-up or Pull-down device is disabled (default) 1_B **Enabled** Pull-up or Pull-down device is enabled
PP1	1	rw	**Pull-Up/Pull-Down Enable at Port 2 Bit 1** 0_B **Disabled** Pull-up or Pull-down device is disabled (default) 1_B **Enabled** Pull-up or Pull-down device is enabled
PP0	0	rw	**Pull-Up/Pull-Down Enable at Port 2 Bit 0** 0_B **Disabled** Pull-up or Pull-down device is disabled (default) 1_B **Enabled** Pull-up or Pull-down device is enabled

Table 242 RESET of P2_PUDEN

Register Reset Type	Reset Values	Reset Short Name	Reset Mode	Note
RESET_TYPE_3	00000000_H	RESET_TYPE_3		

16 General Purpose Timer Units (GPT12)

16.1 Features

16.1.1 Features Block GPT1

The following list summarizes the supported features:

- f_{GPT}/4 maximum resolution
- 3 independent timers/counters
- Timers/counters can be concatenated
- 4 operating modes:
  - Timer Mode
  - Gated Timer Mode
  - Counter Mode
  - Incremental Interface Mode
- Reload and Capture functionality
- Shared interrupt: Node 0

16.1.2 Features Block GPT2

The following list summarizes the supported features:

- f_{GPT}/2 maximum resolution
- 2 independent timers/counters
- Timers/counters can be concatenated
- 3 operating modes:
  - Timer Mode
  - Gated Timer Mode
  - Counter Mode
- Extended capture/reload functions via 16-bit capture/reload register CAPREL
- Shared interrupt: Node 1

16.2 Introduction

The General Purpose Timer Unit blocks GPT1 and GPT2 have very flexible multifunctional timer structures which may be used for timing, event counting, pulse width measurement, pulse generation, frequency multiplication, and other purposes.

They incorporate five 16-bit timers that are grouped into the two timer blocks GPT1 and GPT2. Each timer in each block may operate independently in a number of different modes such as Gated timer or Counter Mode, or may be concatenated with another timer of the same block.

Each block has alternate input/output functions and specific interrupts associated with it. Input signals can be selected from several sources by register PISEL.

The GPT module is clocked with clock f_{GPT}. f_{GPT} is a clock derived from f_{SYS}.

16.2.1 Block Diagram GPT1

Block GPT1 contains three timers/counters: The core timer T3 and the two auxiliary timers T2 and T4. The maximum resolution is $f_{GPT}/4$. The auxiliary timers of GPT1 may optionally be configured as reload or capture registers for the core timer. These registers are listed in **Section 16.3.8.1**.

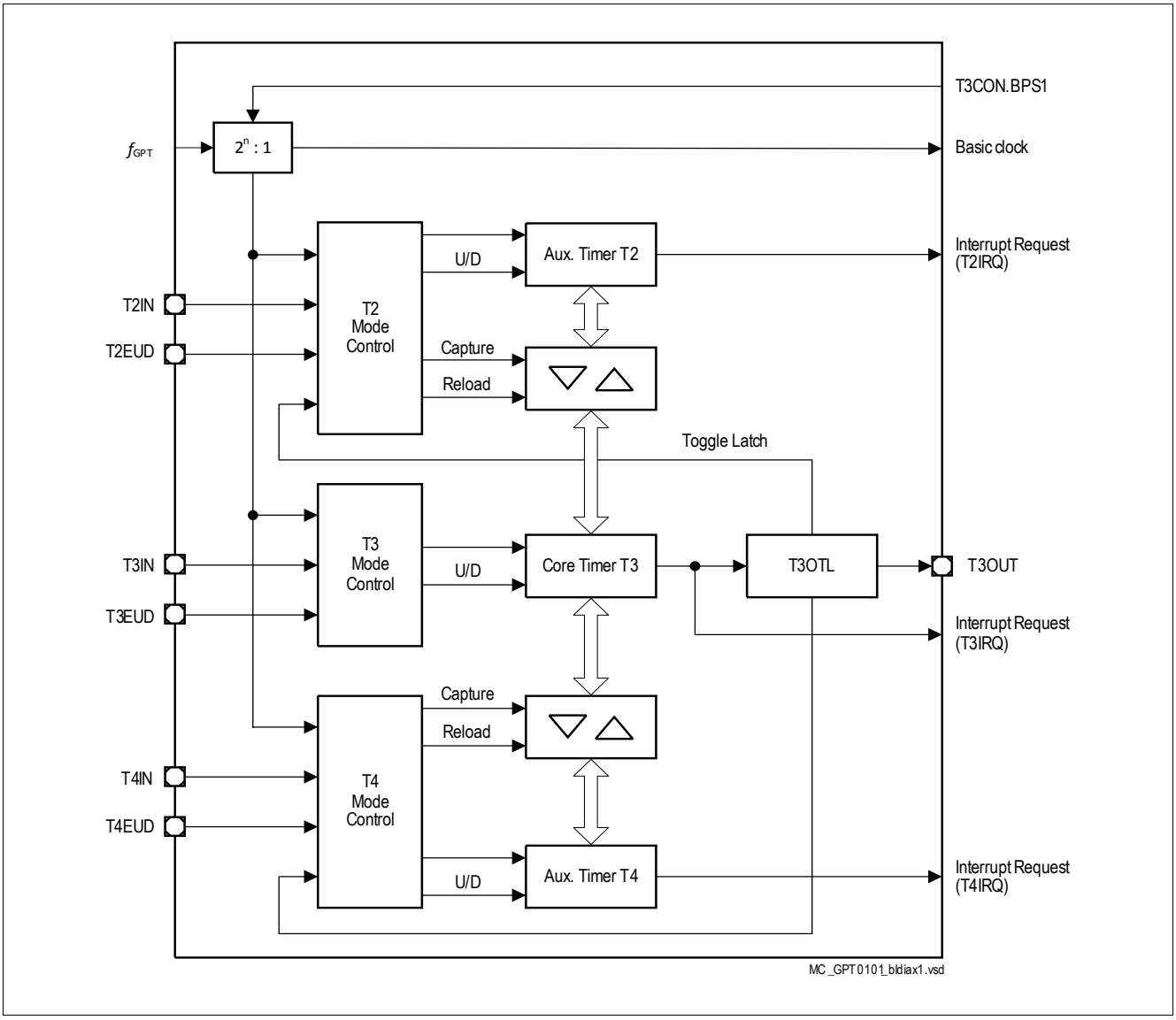

Figure 85 GPT1 Block Diagram (n = 2 … 5)

16.2.2 Block Diagram GPT2

Block GPT2 contains two timers/counters: The core timer T6 and the auxiliary timer T5. The maximum resolution is $f_{GPT}/2$. An additional Capture/Reload register (CAPREL) supports capture and reload operation with extended functionality. These registers are listed in **Section 16.4.8.1**.

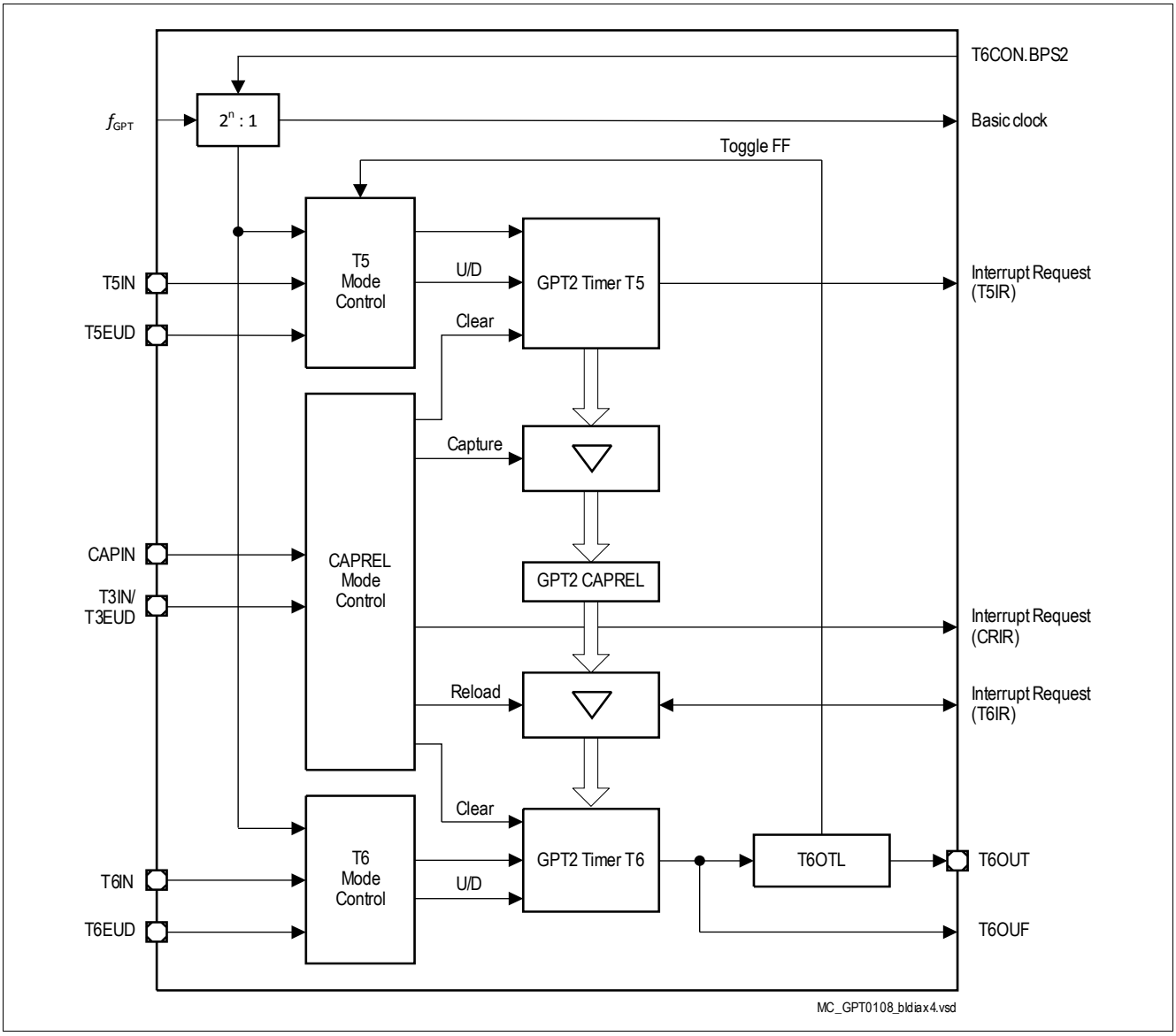

Figure 86 GPT2 Block Diagram (n = 1 … 4)

16.3 Timer Block GPT1

From a programmer's point of view, the GPT1 block is composed of a set of SFRs as summarized below. Those portions of port and direction registers which are used for alternate functions by the GPT1 block are shaded.

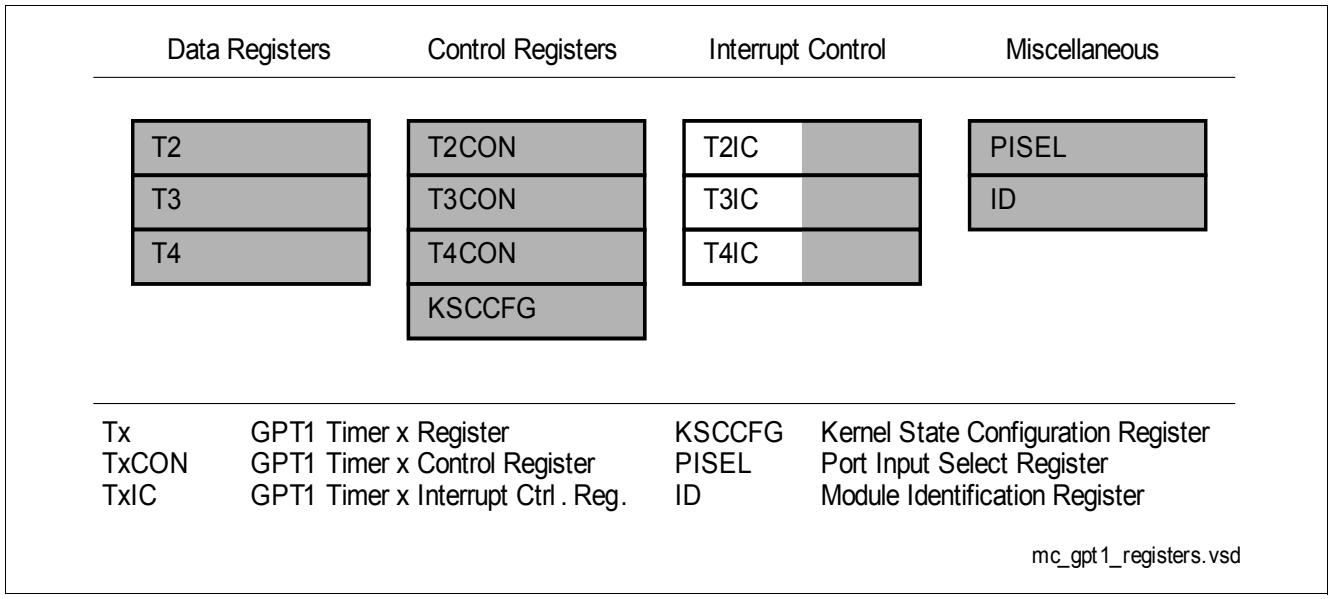

Figure 87 SFRs Associated with Timer Block GPT1

All three timers of block GPT1 (T2, T3, T4) can run in one of 4 basic modes: Timer Mode, Gated Timer Mode, Counter Mode, or Incremental Interface Mode. All timers can count up or down. Each timer of GPT1 is controlled by a separate control register TxCON.

Each timer has an input pin TxIN (alternate pin function) associated with it, which serves as the gate control in Gated Timer Mode, or as the count input in Counter Mode. The count direction (up/down) may be programmed via software or may be dynamically altered by a signal at the External Up/Down control input TxEUD (alternate pin function). An overflow/underflow of core timer T3 is indicated by the Output Toggle Latch T3OTL, whose state may be output on the associated pin T3OUT (alternate pin function). The auxiliary timers T2 and T4 may additionally be concatenated with the core timer T3 (through T3OTL) or may be used as capture or reload registers for the core timer T3.

The current contents of each timer can be read or modified by the CPU by accessing the corresponding timer count registers T2, T3, or T4, located in the non-bitaddressable SFR space (see **Section 16.3.8.1**). When any of the timer registers is written to by the CPU in the state immediately preceding a timer increment, decrement, reload, or capture operation, the CPU write operation has priority in order to guarantee correct results.

The interrupts of GPT1 are controlled through the GPTM1IEN and GPTM1IRC. These registers are not part of the GPT1 block.

The input and output lines of GPT1 are connected to pins. The control registers for the port functions are located in the respective port modules.

*Note: The timing requirements for external input signals can be found in **Section 16.3.5**, **Section 16.6.1** summarizes the module interface signals, including pins.*

16.3.1 GPT1 Core Timer T3 Control

The current contents of the core timer T3 are reflected by its count register T3. This register can also be written to by the CPU, for example, to set the initial start value.

The core timer T3 is configured and controlled via its control register T3CON.

Timer T3 Run Control

The core timer T3 can be started or stopped by software through bit T3R (Timer T3 Run Bit). This bit is relevant in all operating modes of T3. Setting bit T3R will start the timer, clearing bit T3R stops the timer.

In Gated Timer Mode, the timer will only run if T3R = 1 and the gate is active (high or low, as programmed).

Note: When bit T2RC or T4RC in timer control register T2CON or T4CON is set, bit T3R will also control (start and stop) the auxiliary timer(s) T2 and/or T4.

Count Direction Control

The count direction of the GPT1 timers (core timer and auxiliary timers) can be controlled either by software or by the external input pin TxEUD (Timer Tx External Up/Down Control Input). These options are selected by bits TxUD and TxUDE in the respective control register TxCON. When the up/down control is provided by software (bit TxUDE = 0), the count direction can be altered by setting or clearing bit TxUD. When bit TxUDE = 1, pin TxEUD is selected to be the controlling source of the count direction. However, bit TxUD can still be used to reverse the actual count direction, as shown in **Table 255**. The count direction can be changed regardless of whether or not the timer is running.

Note: When pin TxEUD is used as external count direction control input, it must be configured as input.

Timer T3 Output Toggle Latch

The overflow/underflow signal of timer T3 is connected to a block named ‘Toggle Latch’, shown in the Timer Mode diagrams. **Figure 88** illustrates the details of this block. An overflow or underflow of T3 will clock two latches: The first latch represents bit T3OTL in control register T3CON. The second latch is an internal latch toggled by T3OTL’s output. Both latch outputs are connected to the input control blocks of the auxiliary timers T2 and T4. The output level of the shadow latch will match the output level of T3OTL, but is delayed by one clock cycle. When the T3OTL value changes, this will result in a temporarily different output level from T3OTL and the shadow latch, which can trigger the selected count event in T2 and/or T4.

When software writes to T3OTL, both latches are set or cleared simultaneously. In this case, both signals to the auxiliary timers carry the same level and no edge will be detected. Bit T3OE (overflow/underflow output enable) in register T3CON enables the state of T3OTL to be monitored via an external pin T3OUT. When T3OTL is linked to an external port pin (must be configured as output), T3OUT can be used to control external HW. If T3OE = 1, pin T3OUT outputs the state of T3OTL. If T3OE = 0, pin T3OUT outputs a high level (as long as the T3OUT alternate function is selected for the port pin).

The trigger signals can serve as an input for the counter function or as a trigger source for the reload function of the auxiliary timers T2 and T4.

As can be seen from **Figure 88**, when latch T3OTL is modified by software to determine the state of the output line, also the internal shadow latch is set or cleared accordingly. Therefore, no trigger condition is detected by T2/T4 in this case.

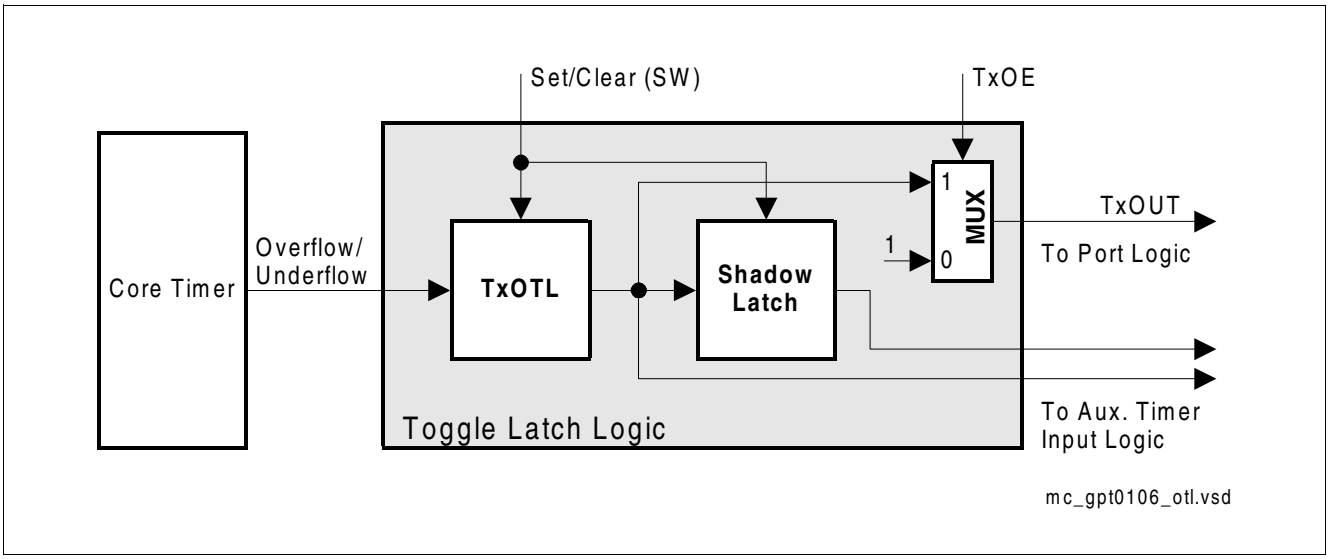

Figure 88 Block Diagram of the Toggle Latch Logic of Core Timer T3 (x = 3)

16.3.2 GPT1 Core Timer T3 Operating Modes

Timer T3 can operate in one of several modes.

Timer T3 in Timer Mode

Timer mode for the core timer T3 is selected by setting bitfield T3M in register T3CON to 000_B. In Timer Mode, T3 is clocked with the module's input clock f_{GPT} divided by two programmable prescalers controlled by bitfields BPS1 and T3I in register T3CON. Please see **Section 16.3.5** for details on the input clock options.

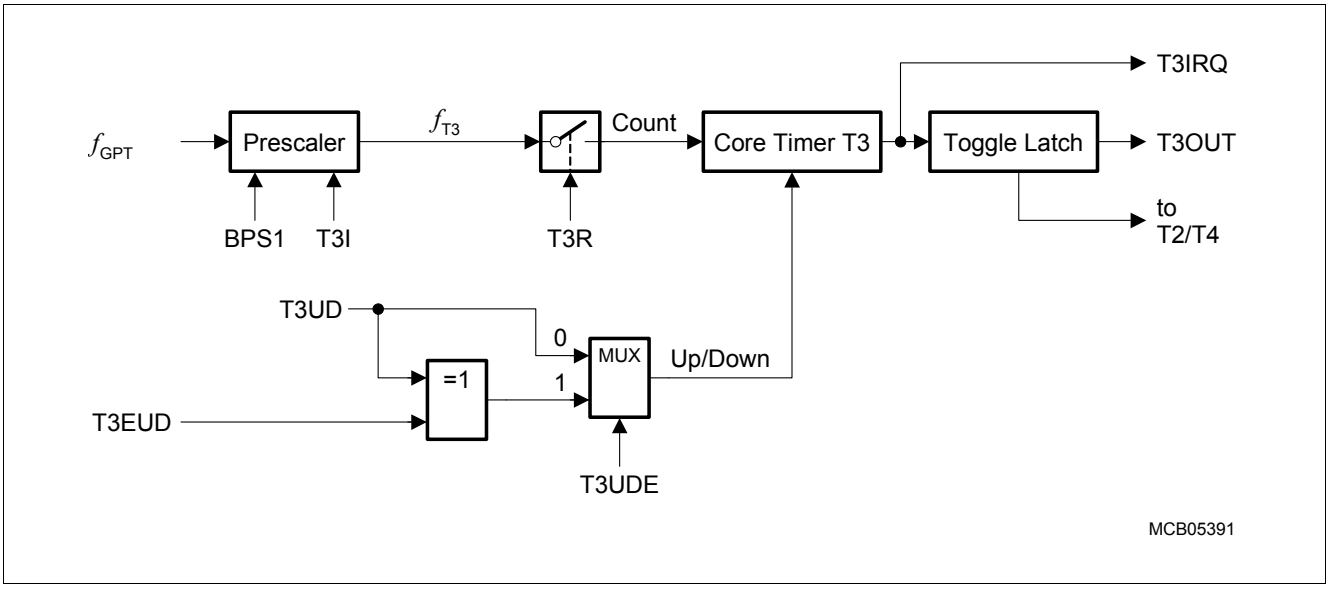

Figure 89 Block Diagram of Core Timer T3 in Timer Mode

Timer T3 in Gated Timer Mode

Gated Timer Mode for the core timer T3 is selected by setting bitfield T3M in register T3CON to 010_B or 011_B. Bit T3M.0 (T3CON.3) selects the active level of the gate input. The same options for the input frequency are available in Gated Timer Mode as in Timer Mode (see **Section 16.3.5**). However, the input clock to the timer in this mode is gated by the external input pin T3IN (Timer T3 External Input).
To enable this operation, the associated pin T3IN must be configured as input.

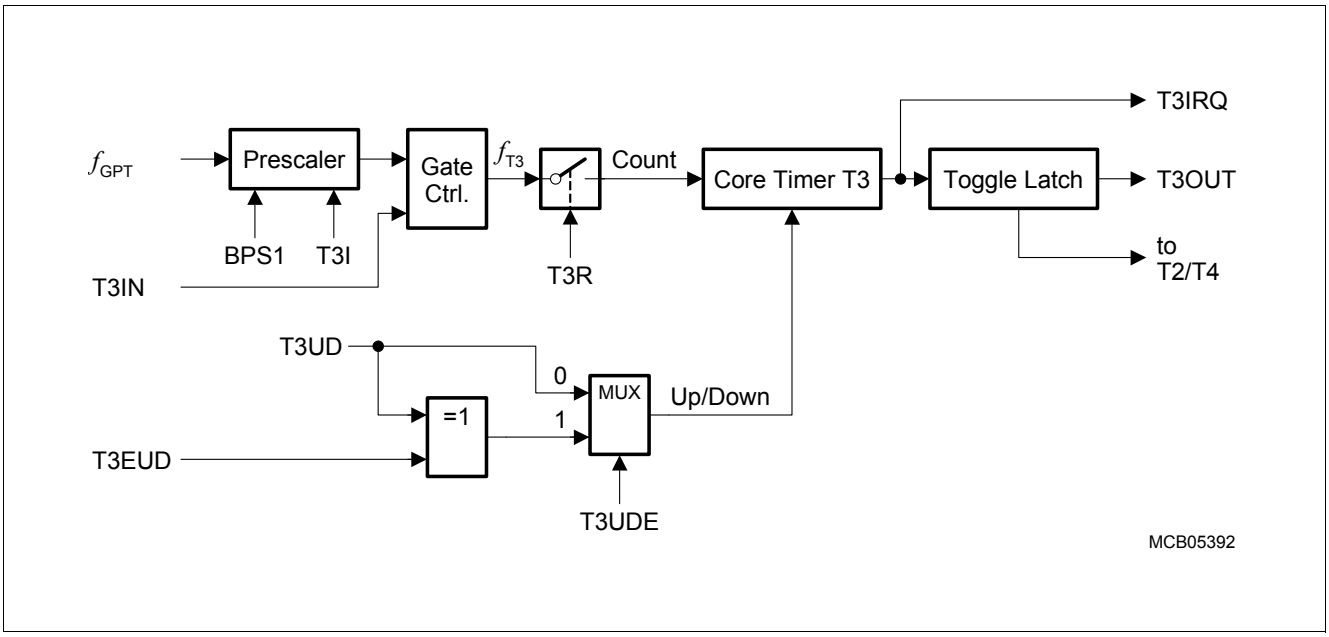

Figure 90 Block Diagram of Core Timer T3 in Gated Timer Mode

If T3M = 010_B, the timer is enabled when T3IN shows a low level. A high level at this line stops the timer. If T3M = 011_B, line T3IN must have a high level in order to enable the timer. Additionally, the timer can be turned on or off by software using bit T3R. The timer will only run if T3R is 1 and the gate is active. It will stop if either T3R is 0 or the gate is inactive.

Note: A transition of the gate signal at pin T3IN does not cause an interrupt request.

Timer T3 in Counter Mode

Counter Mode for the core timer T3 is selected by setting bitfield T3M in register T3CON to 001_B. In Counter Mode, timer T3 is clocked by a transition at the external input pin T3IN. The event causing an increment or decrement of the timer can be a positive, a negative, or both a positive and a negative transition at this line. Bitfield T3I in control register T3CON selects the triggering transition (see **Table 257**).

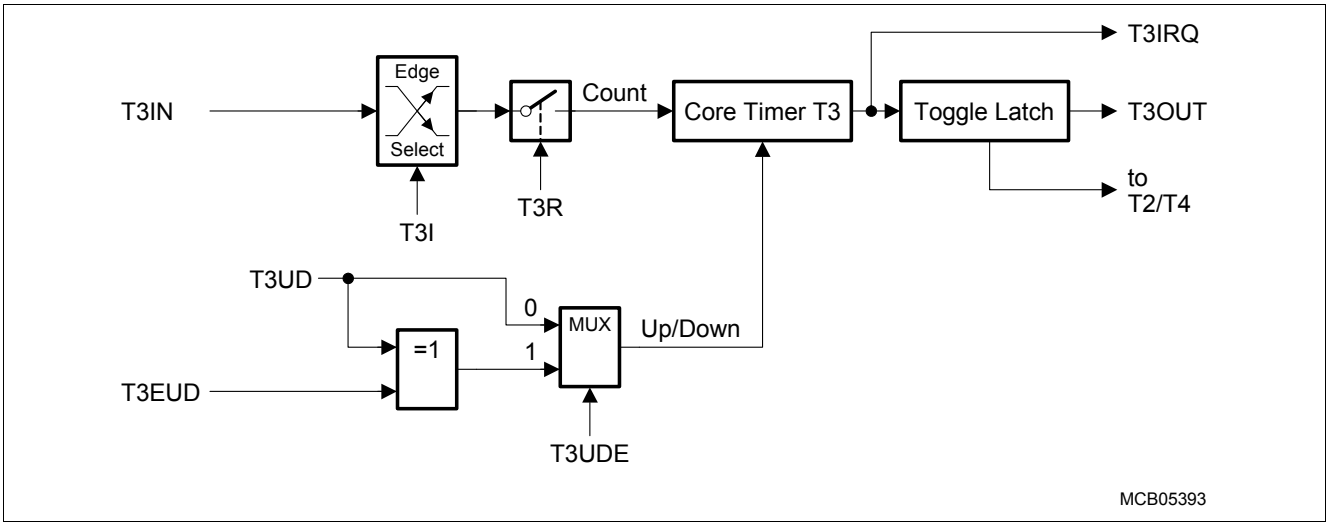

Figure 91 Block Diagram of Core Timer T3 in Counter Mode

For Counter Mode operation, pin T3IN must be configured as input. The maximum input frequency allowed in Counter Mode depends on the selected prescaler value. To ensure that a transition of the count input signal applied to T3IN is recognized correctly, its level must be held high or low for a minimum number of module clock cycles before it changes. This information can be found in **Section 16.3.5**.

Timer T3 in Incremental Interface Mode

Incremental interface mode for the core timer T3 is selected by setting bitfield T3M in register T3CON to 110_B or 111_B. In Incremental Interface Mode, the two inputs associated with core timer T3 (T3IN, T3EUD) are used to interface to an incremental encoder. T3 is clocked by each transition on one or both of the external input pins to provide 2-fold or 4-fold resolution of the encoder input.

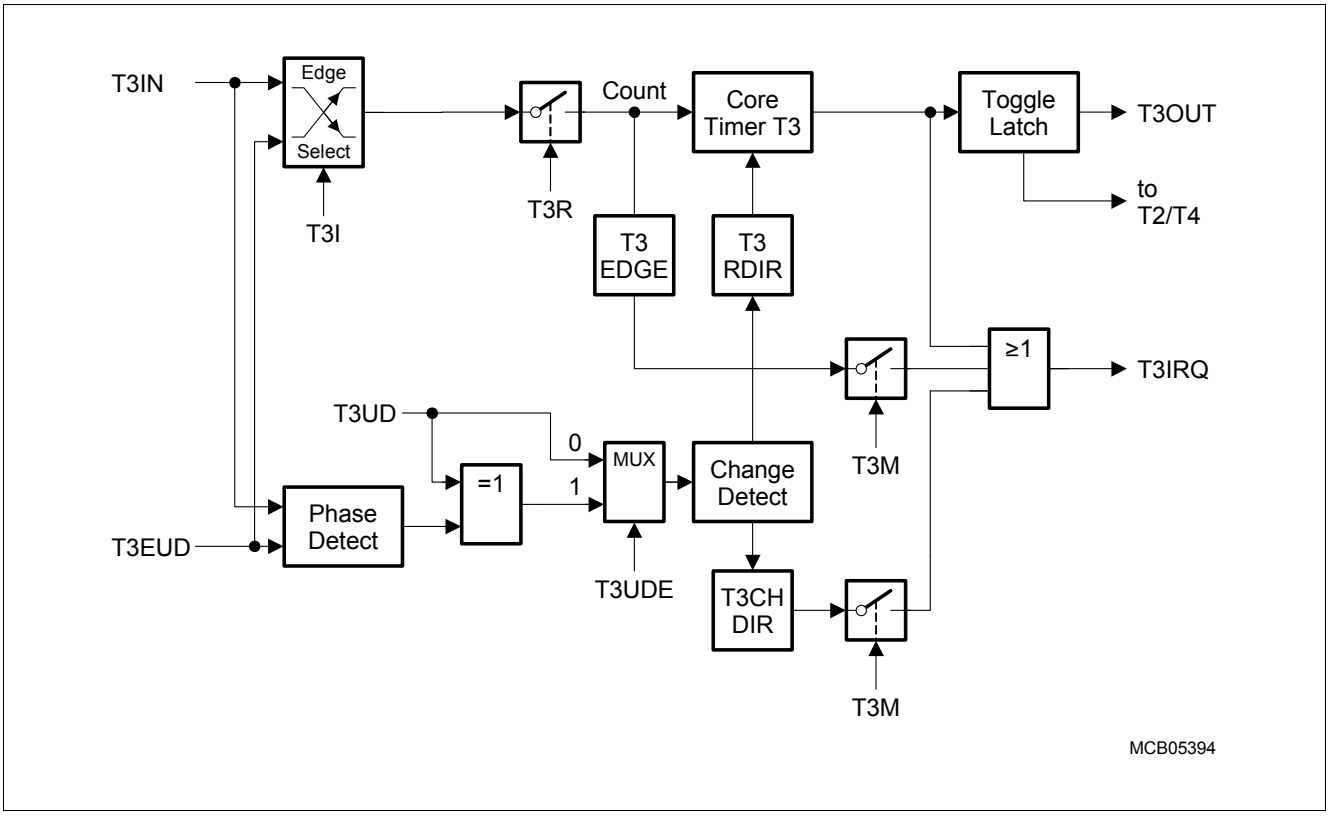

Figure 92 Block Diagram of Core Timer T3 in Incremental Interface Mode

Bitfield T3I in control register T3CON selects the triggering transitions (see **Table 259**). The sequence of the transitions of the two input signals is evaluated and generates count pulses as well as the direction signal. So T3 is modified automatically according to the speed and the direction of the incremental encoder and, therefore, its contents always represent the encoder's current position.

The interrupt request (T3IRQ) generation mode can be selected: In Rotation Detection Mode (T3M = 110_B), an interrupt request is generated each time the count direction of T3 changes. In Edge Detection Mode (T3M = 111_B), an interrupt request is generated each time a count edge for T3 is detected. Count direction, changes in the count direction, and count requests are monitored by status bits T3RDIR, T3CHDIR, and T3EDGE in register T3CON.

The incremental encoder can be connected directly to the TLE984xQX without external interface logic. In a standard system, however, comparators will be employed to convert the encoder's differential outputs (such as A, $\overline{A}$) to digital signals (such as A). This greatly increases noise immunity.

Note: The third encoder output T0, which indicates the mechanical zero position, may be connected to an external interrupt input and trigger a reset of timer T3.
If input T4IN is available, T0 can be connected there and clear T3 automatically without requiring an interrupt.

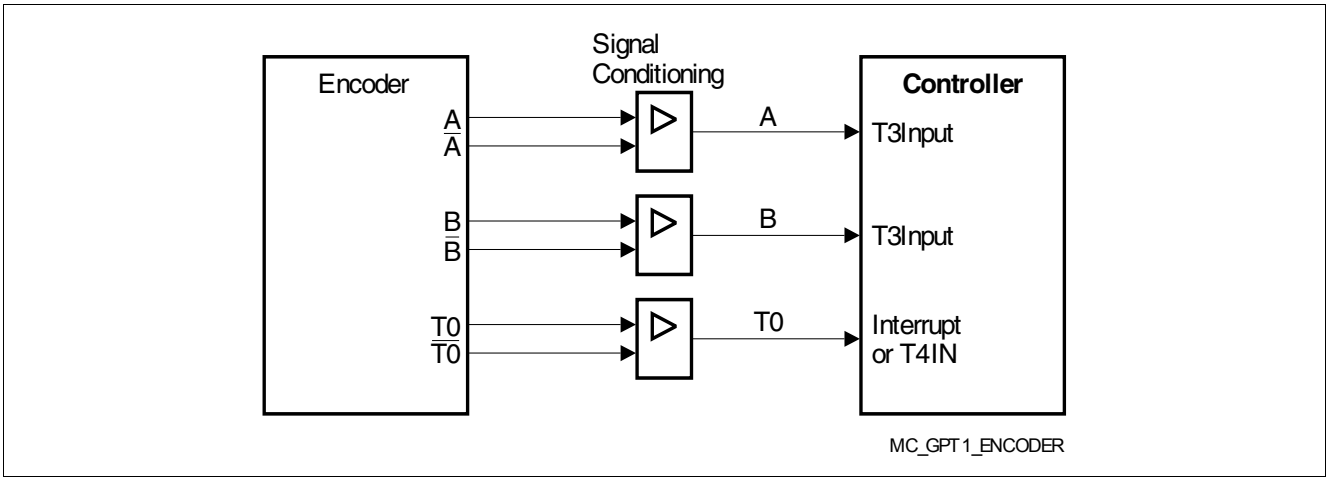

Figure 93 Connection of the Encoder to the TLE984xQX

For incremental interface operation, the following conditions must be met:

- Bitfield T3M must be 110_B or 111_B.
- Both pins T3IN and T3EUD must be configured as input.
- Pin T4IN must be configured as input, if used for T0.
- Bit T3UDE must be 1 to enable automatic external direction control.

The maximum count frequency allowed in Incremental Interface Mode depends on the selected prescaler value. To ensure that a transition of any input signal is recognized correctly, its level must be held high or low for a minimum number of module clock cycles before it changes. This information can be found in **Section 16.3.5**.

As in Incremental Interface Mode two input signals with a 90° phase shift are evaluated, their maximum input frequency can be half the maximum count frequency.

In Incremental Interface Mode, the count direction is automatically derived from the sequence in which the input signals change, which corresponds to the rotation direction of the connected sensor. **Table 243** summarizes the possible combinations.

Table 243 GPT1 Core Timer T3 (Incremental Interface Mode) Count Direction

Level on Respective other Input	T3IN Input		T3EUD Input	
	Rising ↑	**Falling ↓**	**Rising ↑**	**Falling ↓**
High	Down	Up	Up	Down
Low	Up	Down	Down	Up

Figure 94 and **Figure 95** give examples of T3's operation, visualizing count signal generation and direction control. They also show how input jitter is compensated, which might occur if the sensor rests near to one of its switching points.

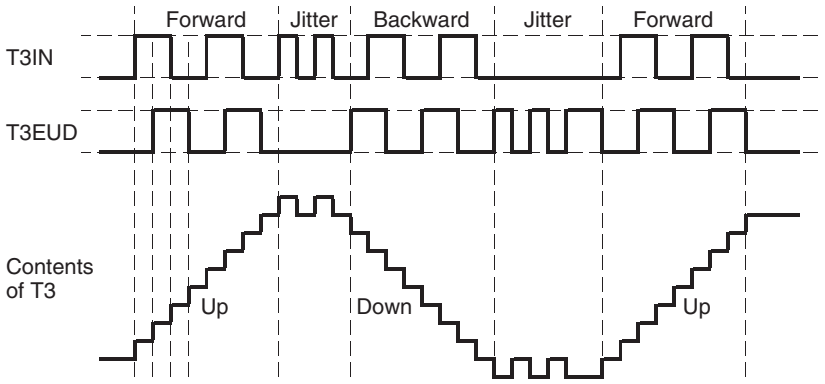

Note: This example shows the timer behaviour assuming that T3 counts upon any transition on input, i.e. T3I = '011 $_B$'.

Figure 94 Evaluation of Incremental Encoder Signals, 2 Count Inputs

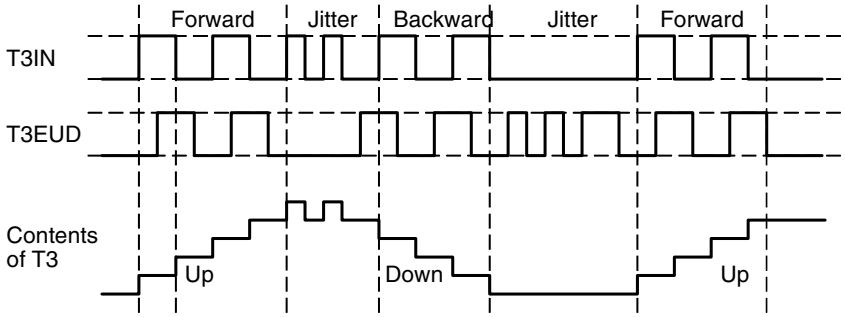

Note: This example shows the timer behaviour assuming that T3 counts upon any transition on input T3IN, i.e. T3I = '001$_B$'.

Figure 95 Evaluation of Incremental Encoder Signals, 1 Count Input

Note: Timer T3 operating in Incremental Interface Mode automatically provides information on the sensor's current position. Dynamic information (speed, acceleration, deceleration) may be obtained by measuring the incoming signal periods (see ***"Combined Capture Modes" on Page 479****).*

16.3.3 GPT1 Auxiliary Timers T2/T4 Control

Auxiliary timers T2 and T4 have exactly the same functionality. They can be configured for Timer Mode, Gated Timer Mode, Counter Mode, or Incremental Interface Mode with the same options for the timer frequencies and the count signal as the core timer T3. In addition to these 4 counting modes, the auxiliary timers can be concatenated with the core timer, or they may be used as reload or capture registers in conjunction with the core timer. The start/stop function of the auxiliary timers can be remotely controlled by the T3 run control bit. Several timers may thus be controlled synchronously.

The current contents of an auxiliary timer are reflected by its count register T2 or T4, respectively. These registers can also be written to by the CPU, for example, to set the initial start value.

The individual configurations for timers T2 and T4 are determined by their control registers T2CON and T4CON, which are organized identically. Note that functions which are present in all 3 timers of block GPT1 are controlled in the same bit positions and in the same manner in each of the specific control registers.

Note: The auxiliary timers have no output toggle latch and no alternate output function.

Timer T2/T4 Run Control

Each of the auxiliary timers T2 and T4 can be started or stopped by software in two different ways:

- Through the associated timer run bit (T2R or T4R). In this case it is required that the respective control bit TxRC = 0.
- Through the core timer's run bit (T3R). In this case the respective remote control bit must be set (TxRC = 1).

The selected run bit is relevant in all operating modes of T2/T4. Setting the bit will start the timer, clearing the bit stops the timer.

In Gated Timer Mode, the timer will only run if the selected run bit is set and the gate is active (high or low, as programmed).

Note: If remote control is selected T3R will start/stop timer T3 and the selected auxiliary timer(s) synchronously.

Count Direction Control

The count direction of the GPT1 timers (core timer and auxiliary timers) is controlled in the same way, either by software or by the external input pin TxEUD. Please refer to the description in **Table 255**.

Note: When pin TxEUD is used as external count direction control input, it must be configured as input.

16.3.4 GPT1 Auxiliary Timers T2/T4 Operating Modes

The operation of the auxiliary timers in the basic operating modes is almost identical with the core timer's operation, with very few exceptions. Additionally, some combined operating modes can be selected.

Timers T2 and T4 in Timer Mode

Timer mode for an auxiliary timer Tx is selected by setting its bitfield TxM in register TxCON to 000_B.

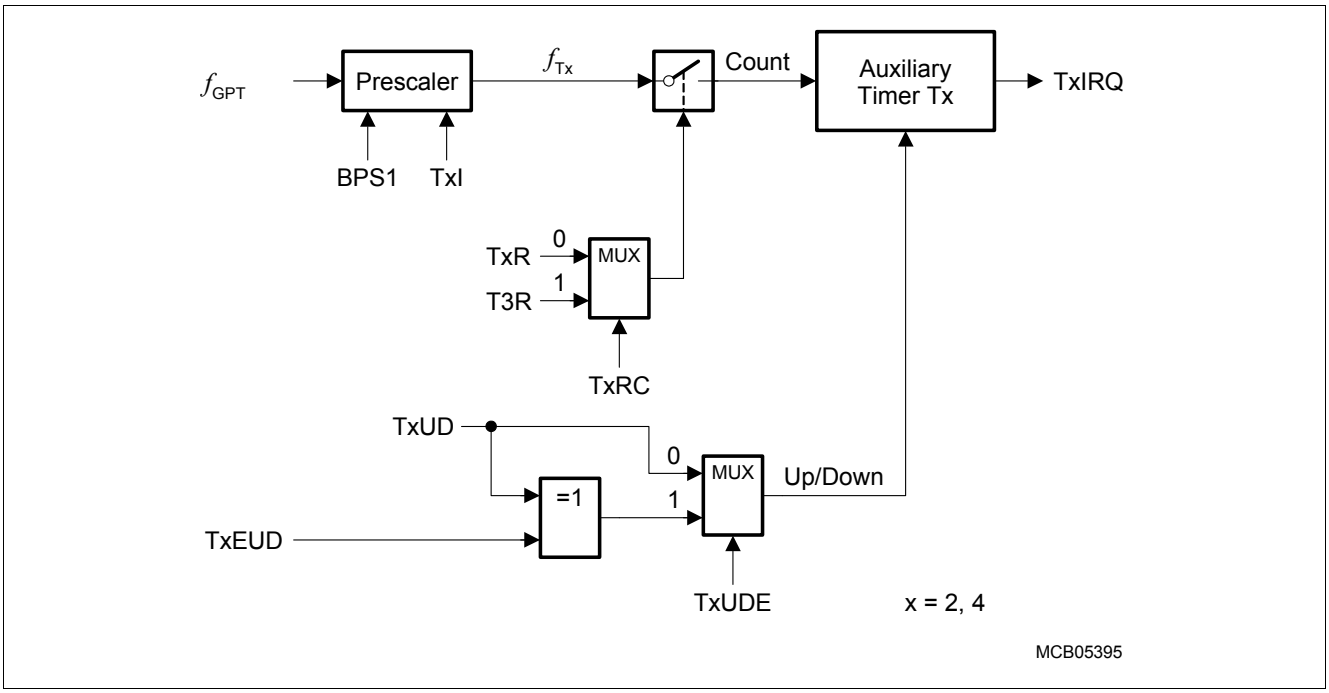

Figure 96 Block Diagram of an Auxiliary Timer in Timer Mode

Timers T2 and T4 in Gated Timer Mode

Gated Timer Mode for an auxiliary timer Tx is selected by setting bitfield TxM in register TxCON to 010_B or 011_B. Bit TxM.0 (TxCON.3) selects the active level of the gate input.

Note: A transition of the gate signal at line TxIN does not cause an interrupt request.

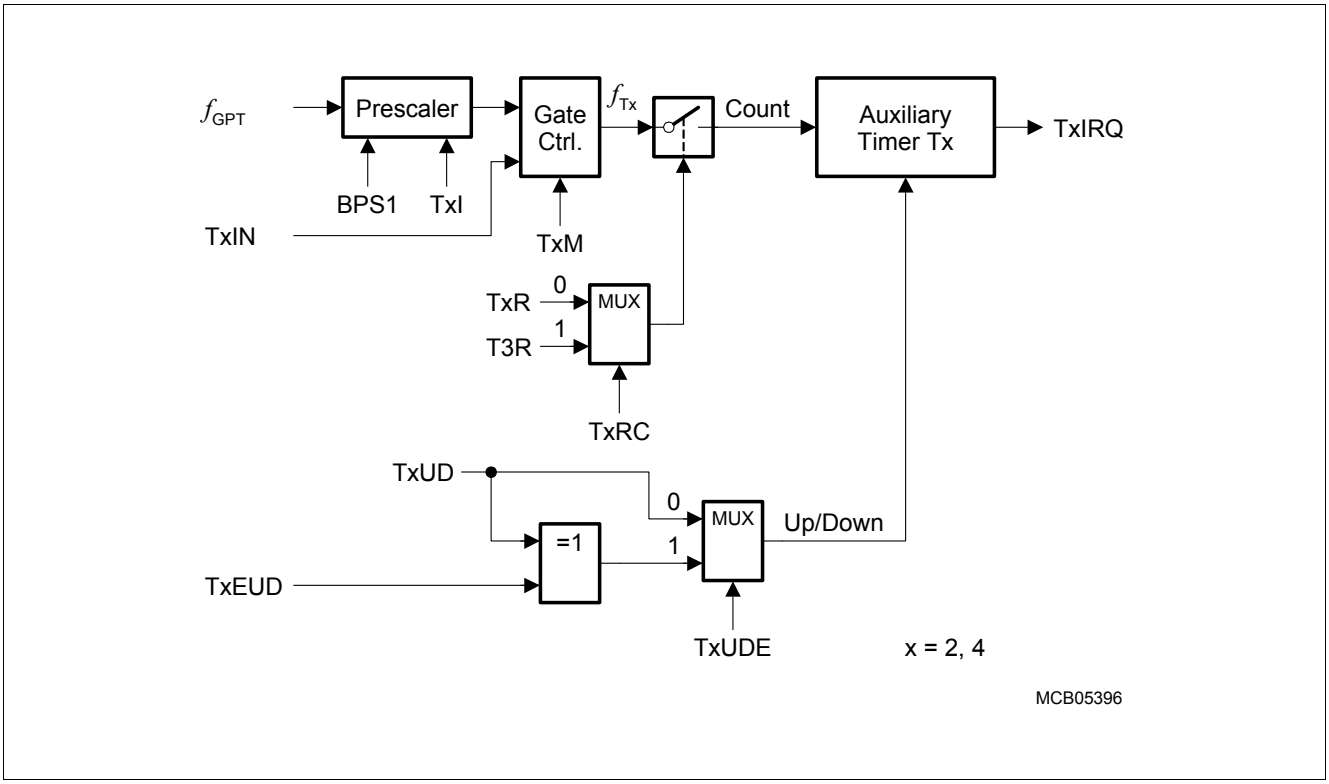

Figure 97 Block Diagram of an Auxiliary Timer in Gated Timer Mode

Note: There is no output toggle latch for T2 and T4.
Start/stop of an auxiliary timer can be controlled locally or remotely.

Timers T2 and T4 in Counter Mode

Counter Mode for an auxiliary timer Tx is selected by setting bitfield TxM in register TxCON to 001_B. In Counter Mode, an auxiliary timer can be clocked either by a transition at its external input line TxIN, or by a transition of timer T3's toggle latch T3OTL. The event causing an increment or decrement of a timer can be a positive, a negative, or both a positive and a negative transition at either the respective input pin or at the toggle latch. Bitfield TxI in control register TxCON selects the triggering transition (see **Table 258**).

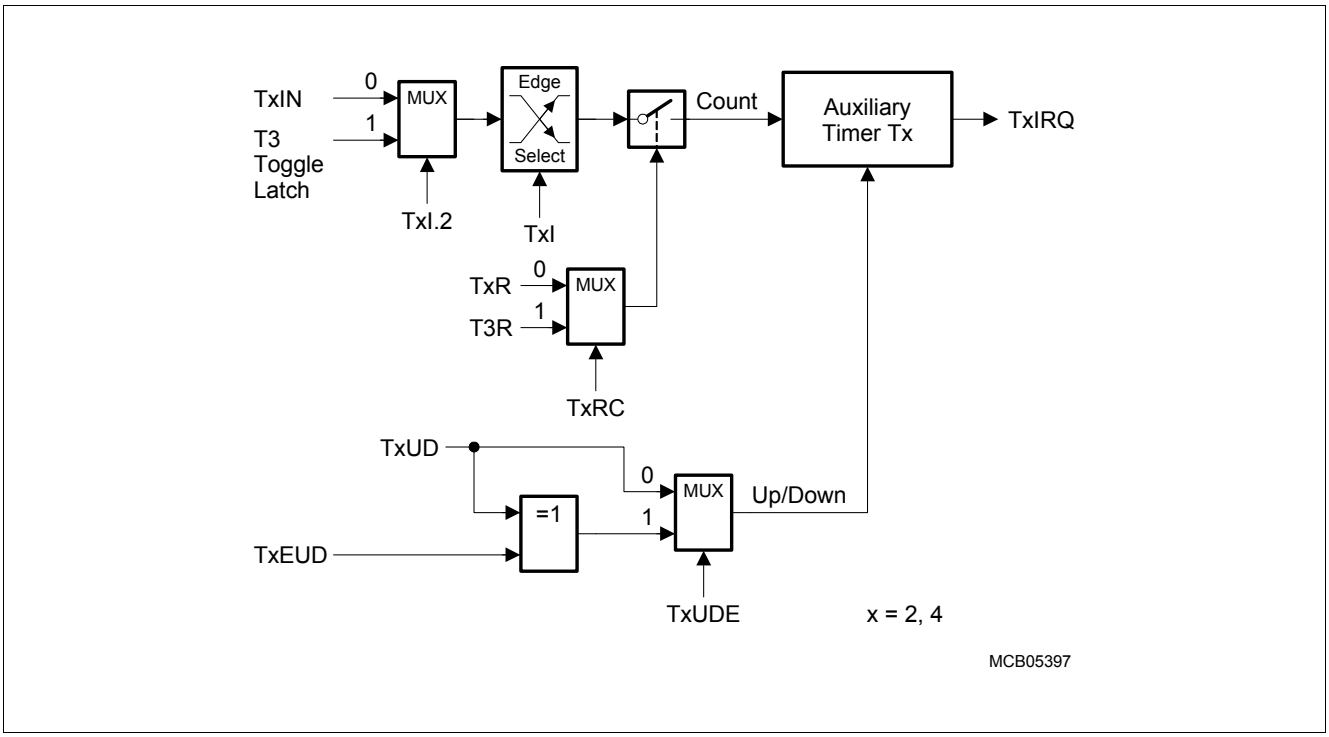

Figure 98 Block Diagram of an Auxiliary Timer in Counter Mode

Note: Only state transitions of T3OTL which are caused by the overflows/underflows of T3 will trigger the counter function of T2/T4. Modifications of T3OTL via software will NOT trigger the counter function of T2/T4.

For counter operation, pin TxIN must be configured as input. The maximum input frequency allowed in Counter Mode depends on the selected prescaler value. To ensure that a transition of the count input signal applied to TxIN is recognized correctly, its level must be held high or low for a minimum number of module clock cycles before it changes. This information can be found in **Section 16.3.5**.

Timer Concatenation

Using the toggle bit T3OTL as a clock source for an auxiliary timer in Counter Mode concatenates the core timer T3 with the respective auxiliary timer. This concatenation forms either a 32-bit or a 33-bit timer/counter, depending on which transition of T3OTL is selected to clock the auxiliary timer.

- **32-bit Timer/Counter:** If both a positive and a negative transition of T3OTL are used to clock the auxiliary timer, this timer is clocked on every overflow/underflow of the core timer T3. Thus, the two timers form a 32-bit timer.
- **33-bit Timer/Counter:** If either a positive or a negative transition of T3OTL is selected to clock the auxiliary timer, this timer is clocked on every second overflow/underflow of the core timer T3. This configuration forms a 33-bit timer (16-bit core timer + T3OTL + 16-bit auxiliary timer).
  As long as bit T3OTL is not modified by software, it represents the state of the internal toggle latch, and can be regarded as part of the 33-bit timer.

The count directions of the two concatenated timers are not required to be the same. This offers a wide variety of different configurations.

T3, which represents the low-order part of the concatenated timer, can operate in Timer Mode, Gated Timer Mode or Counter Mode in this case.

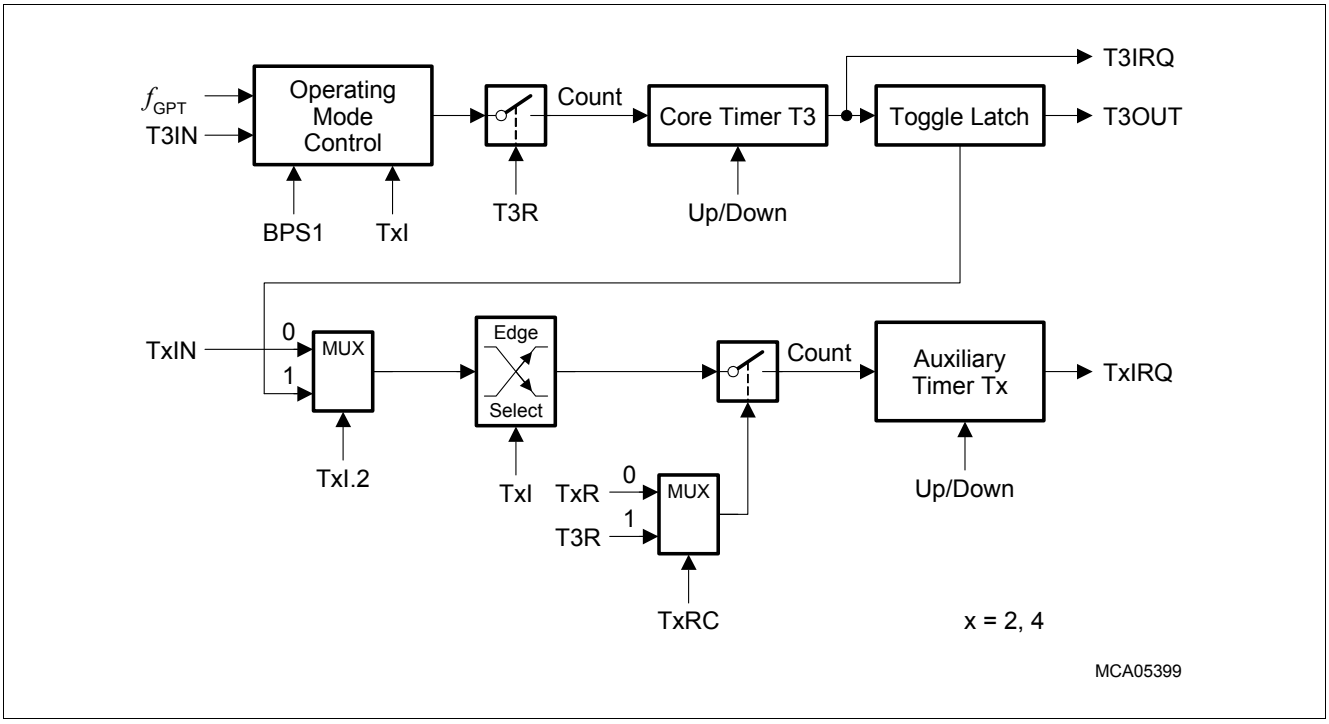

Figure 99 Concatenation of Core Timer T3 and an Auxiliary Timer

For measuring longer time periods, the core timer T3 may be concatenated with an auxiliary timer (T2/T4). The core timer contains the low part, and the auxiliary timer contains the high part of the extended timer value.

Timers T2 and T4 in Capture Mode

Capture mode for an auxiliary timer Tx is selected by setting bitfield TxM in the respective register TxCON to 101_B. In capture mode, the contents of the core timer T3 are latched into an auxiliary timer register in response to a signal transition at the respective auxiliary timer's external input pin TxIN. The capture trigger signal can be a positive, a negative, or both a positive and a negative transition.

The two least significant bits of bitfield TxI select the active transition (see **Table 258**). Bit 2 of TxI is irrelevant for capture mode and must be cleared (TxI.2 = 0).

Note: When programmed for capture mode, the respective auxiliary timer (T2 or T4) stops independently of its run flag T2R or T4R.

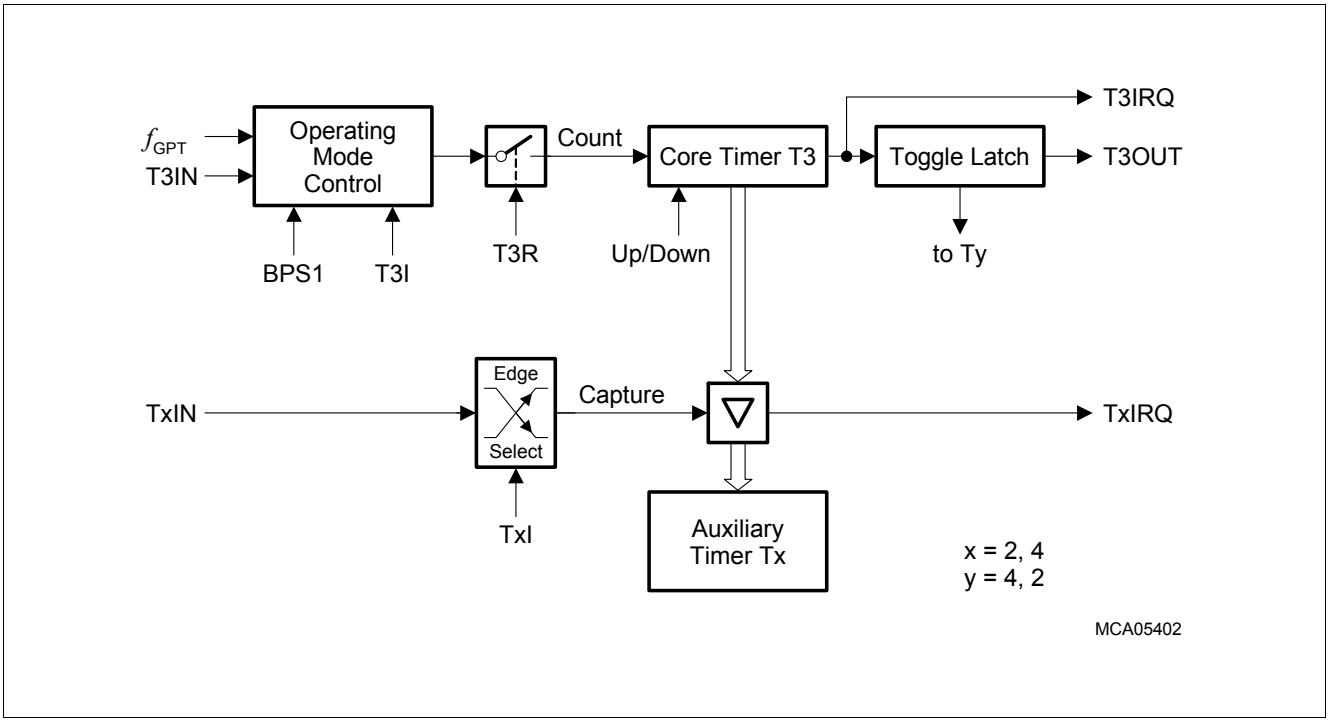

Figure 100 GPT1 Auxiliary Timer in Capture Mode

Upon a trigger (selected transition) at the corresponding input pin TxIN the contents of the core timer are loaded into the auxiliary timer register and the associated interrupt request flag TxIR will be set.

For capture mode operation, the respective timer input pin TxIN must be configured as input. To ensure that a transition of the capture input signal applied to TxIN is recognized correctly, its level must be held high or low for a minimum number of module clock cycles, detailed in **Section 16.3.5**.

Timers T2 and T4 in Incremental Interface Mode

Incremental interface mode for an auxiliary timer Tx is selected by setting bitfield TxM in the respective register TxCON to 110_B or 111_B. In Incremental Interface Mode, the two inputs associated with an auxiliary timer Tx (TxIN, TxEUD) are used to interface to an incremental encoder. Tx is clocked by each transition on one or both of the external input pins to provide 2-fold or 4-fold resolution of the encoder input.

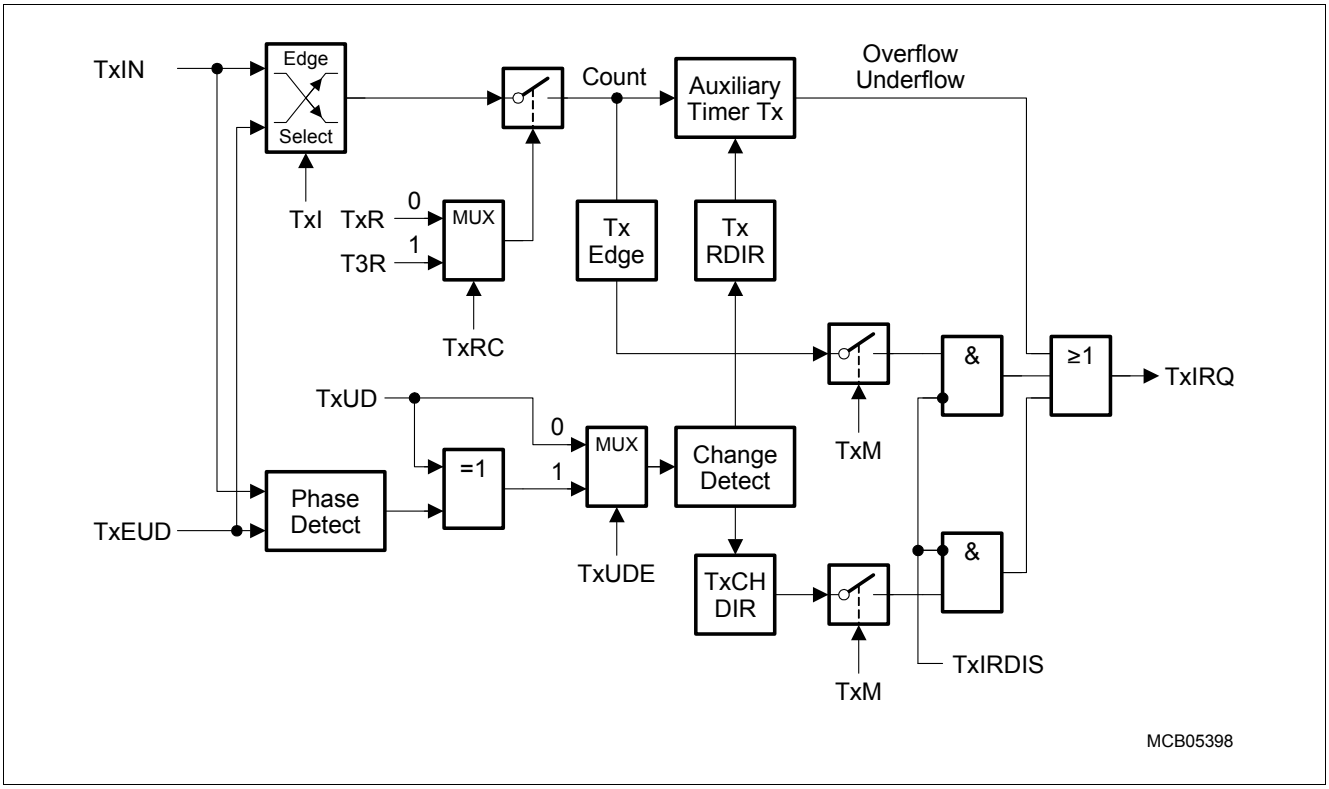

Figure 101 Block Diagram of an Auxiliary Timer in Incremental Interface Mode

The operation of the auxiliary timers T2 and T4 in Incremental Interface Mode and the interrupt generation are the same as described for the core timer T3. The descriptions, figures and tables apply accordingly.

Note: Timers T2 and T4 operating in Incremental Interface Mode automatically provide information on the sensor's current position. For dynamic information (speed, acceleration, deceleration) see ***"Combined Capture Modes" on Page 479****).*

Timers T2 and T4 in Reload Mode

Reload Mode for an auxiliary timer Tx is selected by setting bitfield TxM in the respective register TxCON to 100_B. In reload mode, the core timer T3 is reloaded with the contents of an auxiliary timer register, triggered by one of two different signals. The trigger signal is selected the same way as the clock source for Counter Mode (see **Table 258**), i.e. a transition of the auxiliary timer's input TxIN or the toggle latch T3OTL may trigger the reload.

Note: When programmed for reload mode, the respective auxiliary timer (T2 or T4) stops independently of its run flag T2R or T4R.
The timer input pin TxIN must be configured as input if it shall trigger a reload operation.

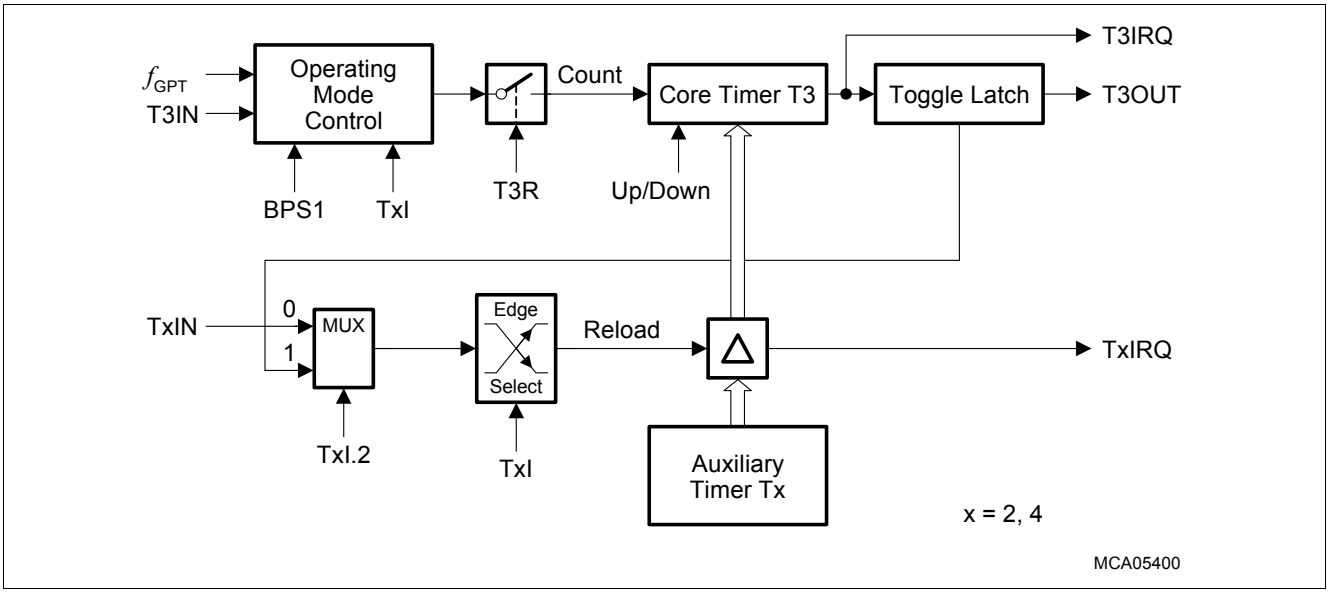

Figure 102 GPT1 Auxiliary Timer in Reload Mode

Upon a trigger signal, T3 is loaded with the contents of the respective timer register (T2 or T4) and the respective interrupt request flag (T2IR or T4IR) is set.

Note: When a T3OTL transition is selected for the trigger signal, the interrupt request flag T3IR will also be set upon a trigger, indicating T3's overflow or underflow. Modifications of T3OTL via software will NOT trigger the counter function of T2/T4.

To ensure that a transition of the reload input signal applied to TxIN is recognized correctly, its level must be held high or low for a minimum number of module clock cycles, detailed in **Section 16.3.5**.

The reload mode triggered by the T3 toggle latch can be used in a number of different configurations. The following functions can be performed, depending on the selected active transition:

- If both a positive and a negative transition of T3OTL are selected to trigger a reload, the core timer will be reloaded with the contents of the auxiliary timer each time it overflows or underflows. This is the standard reload mode (reload on overflow/underflow).
- If either a positive or a negative transition of T3OTL is selected to trigger a reload, the core timer will be reloaded with the contents of the auxiliary timer on every second overflow or underflow.
- Using this "single-transition" mode for both auxiliary timers allows to perform very flexible Pulse Width Modulation (PWM). One of the auxiliary timers is programmed to reload the core timer on a positive transition of T3OTL, the other is programmed for a reload on a negative transition of T3OTL. With this combination the core timer is alternately reloaded from the two auxiliary timers.

Figure 103 shows an example for the generation of a PWM signal using the "single-transition" reload mechanism. T2 defines the high time of the PWM signal (reloaded on positive transitions) and T4 defines the low time of the PWM signal (reloaded on negative transitions). The PWM signal can be output on pin T3OUT if T3OE = 1. With this method, the high and low time of the PWM signal can be varied in a wide range.

Note: The output toggle latch T3OTL is accessible via software and may be changed, if required, to modify the PWM signal.
However, this will NOT trigger the reloading of T3.

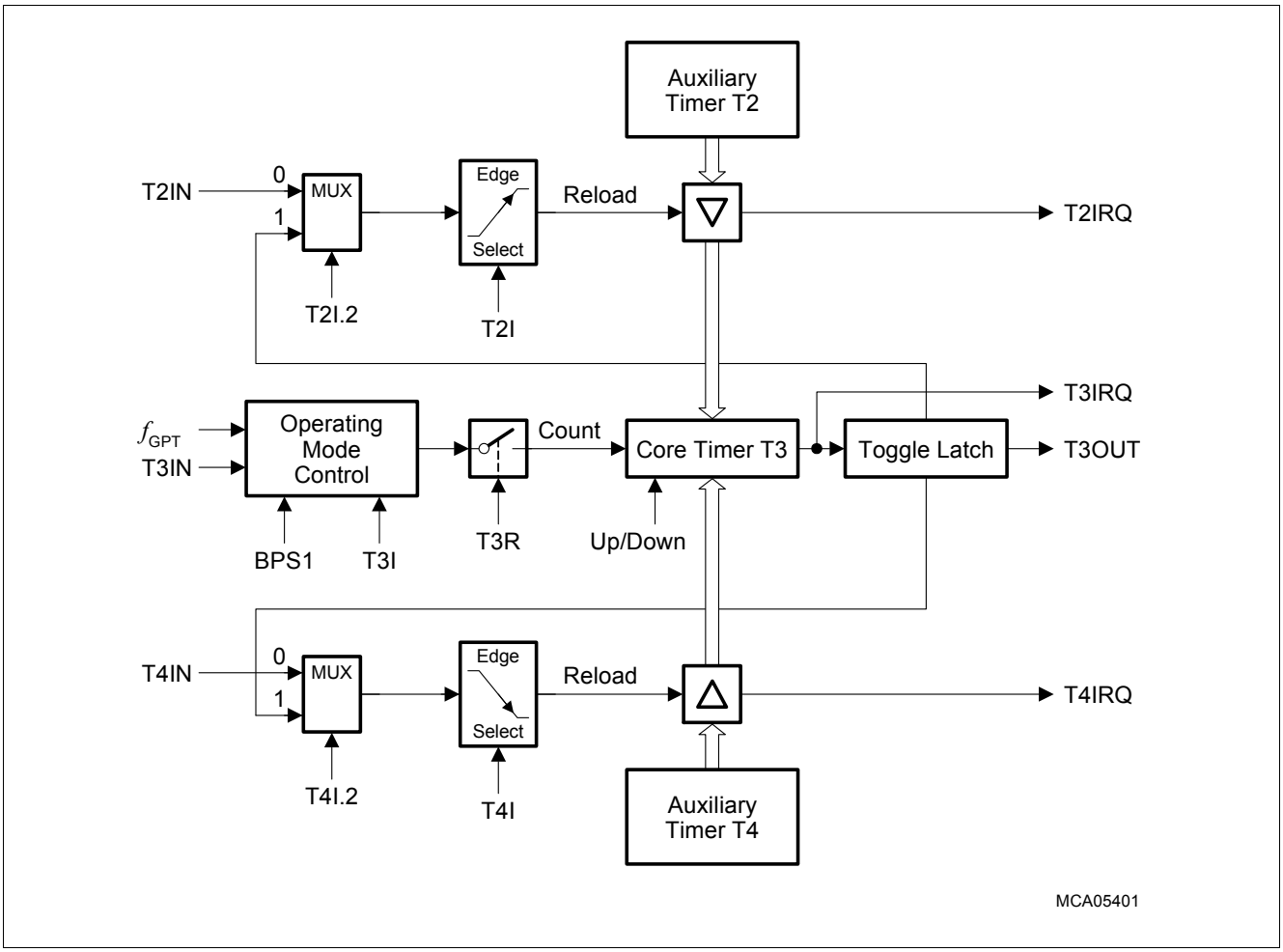

Figure 103 GPT1 Timer Reload Configuration for PWM Generation

Note: Although possible, selecting the same reload trigger event for both auxiliary timers should be avoided. In such a case, both reload registers would try to load the core timer at the same time. If this combination is selected, T2 is disregarded and the contents of T4 is reloaded.

16.3.5 GPT1 Clock Signal Control

All actions within the timer block GPT1 are triggered by transitions of its basic clock. This basic clock is derived from the system clock by a basic block prescaler, controlled by bitfield BPS1 in register T3CON (see **Figure 85**). The count clock can be generated in two different ways:

- **Internal count clock**, derived from GPT1's basic clock via a programmable prescaler, is used for (gated) Timer Mode.
- **External count clock**, derived from the timer's input pin(s), is used for Counter Mode.

For both ways, the basic clock determines the maximum count frequency and the timer's resolution:

Table 244 Basic Clock Selection for Block GPT1

Block Prescaler[1]	BPS1 = 01_B	BPS1 = 00_B[2]	BPS1 = 11_B	BPS1 = 10_B
Prescaling Factor for GPT1: F(BPS1)	F(BPS1) = 4	F(BPS1) = 8	F(BPS1) = 16	F(BPS1) = 32
Maximum External Count Frequency	$f_{GPT}/8$	$f_{GPT}/16$	$f_{GPT}/32$	$f_{GPT}/64$
Input Signal Stable Time	$4 \times t_{GPT}$	$8 \times t_{GPT}$	$16 \times t_{GPT}$	$32 \times t_{GPT}$

1) Please note the non-linear encoding of bitfield BPS1.

2) Default after reset.

Note: When initializing the GPT1 block, and the block prescaler BPS1 in register T3CON needs to be set to a value different from its reset value (00_B), it must be initialized first before any mode involving external trigger signals is configured. These modes include counter, incremental interface, capture, and reload mode. Otherwise, unintended count/capture/reload events may occur.
In this case (e.g. when changing BPS1 during operation of the GPT1 block), disable related interrupts before modification of BPS1, and afterwards clear the corresponding service request flags and re-initialize those registers (T2, T3, T4) that might be affected by a count/capture/reload event.

Internal Count Clock Generation

In Timer Mode and Gated Timer Mode, the count clock for each GPT1 timer is derived from the GPT1 basic clock by a programmable prescaler, controlled by bitfield TxI in the respective timer's control register TxCON.

The count frequency f_{Tx} for a timer Tx and its resolution r_{Tx} are scaled linearly with lower clock frequencies, as can be seen from the following formula:

$$f_{Tx} = \frac{f_{GPT}}{F(BPS1) \bullet 2^{<TxI>}} \qquad r_{Tx}[\mu s] = \frac{F(BPS1) \bullet 2^{<TxI>}}{f_{GPT}[MHz]} \tag{5}$$

The effective count frequency depends on the common module clock prescaler factor F(BPS1) as well as on the individual input prescaler factor $2^{<TxI>}$. **Table 256** summarizes the resulting overall divider factors for a GPT1 timer that result from these cascaded prescalers.

Table 245 lists GPT1 timer's parameters (such as count frequency, resolution, and period) resulting from the selected overall prescaler factor and the module clock f_{GPT}. Note that some numbers may be rounded.

Table 245 GPT1 Timer Parameters

Module Clock f_{GPT} = 10 MHz			Overall Prescaler Factor	Module Clock f_{GPT} = 40 MHz		
Frequency	**Resolution**	**Period**		**Frequency**	**Resolution**	**Period**
2.5 MHz	400 ns	26.21 ms	4	10.0 MHz	100 ns	6.55 ms
1.25 MHz	800 ns	52.43 ms	8	5.0 MHz	200 ns	13.11 ms
625.0 kHz	1.6 µs	104.9 ms	16	2.5 MHz	400 ns	26.21 ms
312.5 kHz	3.2 µs	209.7 ms	32	1.25 MHz	800 ns	52.43 ms
156.25 kHz	6.4 µs	419.4 ms	64	625.0 kHz	1.6 µs	104.9 ms
78.125 kHz	12.8 µs	838.9 ms	128	312.5 kHz	3.2 µs	209.7 ms
39.06 kHz	25.6 µs	1.678 s	256	156.25 kHz	6.4 µs	419.4 ms
19.53 kHz	51.2 µs	3.355 s	512	78.125 kHz	12.8 µs	838.9 ms

Table 245 GPT1 Timer Parameters (cont'd)

Module Clock f_{GPT} = 10 MHz			Overall Prescaler Factor	Module Clock f_{GPT} = 40 MHz		
Frequency	**Resolution**	**Period**		**Frequency**	**Resolution**	**Period**
9.77 kHz	102.4 µs	6.711 s	1024	39.06 kHz	25.6 µs	1.678 s
4.88 kHz	204.8 µs	13.42 s	2048	19.53 kHz	51.2 µs	3.355 s
2.44 kHz	409.6 µs	26.84 s	4096	9.77 kHz	102.4 µs	6.711 s

External Count Clock Input

The external input signals of the GPT1 block are sampled with the GPT1 basic clock (see **Figure 85**). To ensure that a signal is recognized correctly, its current level (high or low) must be held active for at least one complete sampling period, before changing. A signal transition is recognized if two subsequent samples of the input signal represent different levels. Therefore, a minimum of two basic clock periods are required for the sampling of an external input signal. Thus, the maximum frequency of an input signal must not be higher than half the basic clock.

Table 246 summarizes the resulting requirements for external GPT1 input signals.

Table 246 GPT1 External Input Signal Limits

GPT1 Basic Clock = 10 MHz		Input Frequ. Factor	GPT1 Divider BPS1	Input Phase Duration	GPT1 Basic Clock = 40 MHz	
Max. Input Frequency	**Min. Level Hold Time**				**Max. Input Frequency**	**Min. Level Hold Time**
1.25 MHz	400 ns	$f_{GPT}/8$	01_B	4 × t_{GPT}	5.0 MHz	100 ns
625.0 kHz	800 ns	$f_{GPT}/16$	00_B	8 × t_{GPT}	2.5 MHz	200 ns
312.5 kHz	1.6 µs	$f_{GPT}/32$	11_B	16 × t_{GPT}	1.25 MHz	400 ns
156.25 kHz	3.2 µs	$f_{GPT}/64$	10_B	32 × t_{GPT}	625.0 kHz	800 ns

These limitations are valid for all external input signals to GPT1, including the external count signals in Counter Mode and Incremental Interface Mode, the gate input signals in Gated Timer Mode, and the external direction signals.

16.3.6 Interrupt Control for GPT1 Timers

When a timer overflows from $FFFF_H$ to 0000_H (when counting up), or when it underflows from 0000_H to $FFFF_H$ (when counting down), its interrupt request flag in register GPT12E_T2, GPT12E_T3, or GPT12E_T4 will be set. This will cause an interrupt to the respective timer interrupt vector, if the respective interrupt enable bit is set.

In **Reload Mode**, upon a trigger signal, T3 is loaded with the contents of the respective timer (T2 or T4) and the respective interrupt request flag in register GPT12E_T2 or GPT12E_T4 is set.

In **Incremental Interface Mode**, the interrupt request generation can be selected as follows:

- In Rotation Detection Mode (T3M = 110_B), an interrupt request is generated each time the count direction of T3 changes.
- In Edge Detection Mode (T3M = 111_B), an interrupt request is generated each time a count edge for T3 is detected.

In **Capture Mode**, upon a trigger (selected transition) at the corresponding input pin the content of the core timer T3 are loaded into the auxiliary timer register Tx and the associated interrupt request flag in register GPTE12_T2 or GPT12E_T4 will be set.

16.3.7 GPT12 Registers

Table 247 Register Address Space

Module	Base Address	End Address	Note
GPT12E	40010000_H	$40013FFF_H$	

Table 248 Register Overview

Register Short Name	Register Long Name	Offset Address	Reset Value
GPT1 Registers, GPT1 Timer Registers			
GPT12E_T2	Timer T2 Count Register	20_H	**Page 458**
GPT12E_T3	Timer T3 Count Register	24_H	**Page 458**
GPT12E_T4	Timer T4 Count Register	28_H	**Page 458**
GPT1 Registers, GPT1 Core Timer T3 Control Register			
GPT12E_T3CON	Timer T3 Control Register	$0C_H$	**Page 459**
GPT1 Registers, GPT1 Auxiliary Timers T2/T4 Control Registers			
GPT12E_T2CON	Timer T2 Control Register	08_H	**Page 461**
GPT12E_T4CON	Timer T4 Control Register	10_H	**Page 462**
GPT2 Registers, GPT2 Timer Registers			
GPT12E_CAPREL	Capture/Reload Register	$1C_H$	**Page 483**
GPT12E_T5	Timer 5 Count Register	$2C_H$	**Page 482**
GPT12E_T6	Timer 6 Count Register	30_H	**Page 482**
GPT2 Registers, GPT2 Timer Control Registers			
GPT12E_T5CON	Timer T5 Control Register	14_H	**Page 485**
GPT12E_T6CON	Timer T6 Control Register	18_H	**Page 483**
Miscellaneous GPT12 Registers,			
GPT12E_ID	Module Identification Register	00_H	**Page 489**
GPT12E_PISEL	Port Input Select Register	04_H	**Page 488**

The registers are addressed wordwise.

16.3.8 GPT1 Registers

16.3.8.1 GPT1 Timer Registers

Timer T2 Count Register

GPT12E_T2	Offset	Reset Value
Timer T2 Count Register	20_H	see Table 249

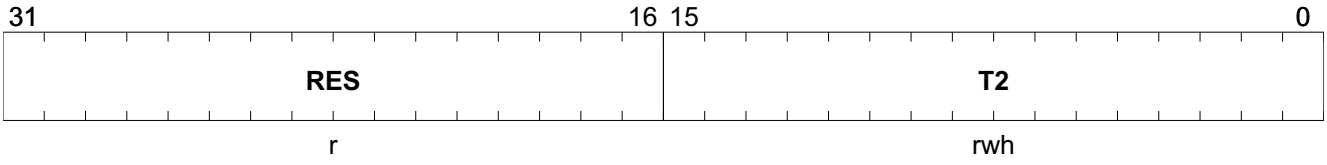

Field	Bits	Type	Description
RES	31:16	r	**Reserved**
T2	15:0	rwh	**Timer T2 Current Value** Contains the current value of the timer T2

Table 249 RESET of GPT12E_T2

Register Reset Type	Reset Values	Reset Short Name	Reset Mode	Note
RESET_TYPE_3	00000000_H	RESET_TYPE_3		

Timer T3 Count Register

GPT12E_T3	Offset	Reset Value
Timer T3 Count Register	24_H	see Table 250

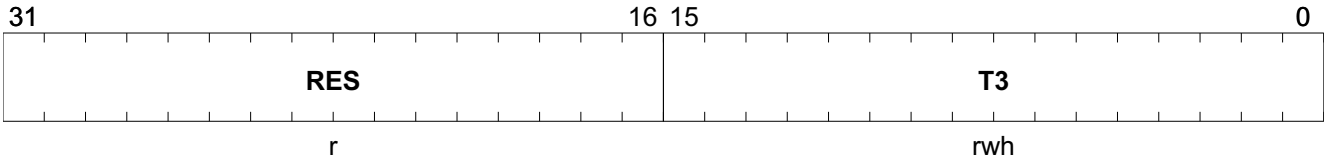

Field	Bits	Type	Description
RES	31:16	r	**Reserved**
T3	15:0	rwh	**Timer T3 Current Value** Contains the current value of the timer T3

Table 250 RESET of GPT12E_T3

Register Reset Type	Reset Values	Reset Short Name	Reset Mode	Note
RESET_TYPE_3	00000000_H	RESET_TYPE_3		

Timer T4 Count Register

GPT12E_T4	Offset	Reset Value
Timer T4 Count Register	28_H	see Table 251

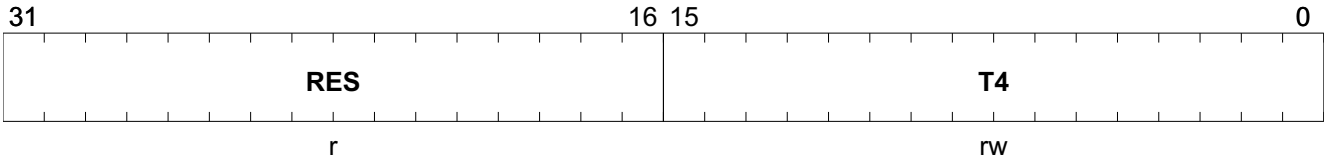

Field	Bits	Type	Description
RES	31:16	r	**Reserved**
T4	15:0	rw	**Timer T4 Current Value** Contains the current value of the timer T4

Table 251 RESET of GPT12E_T4

Register Reset Type	Reset Values	Reset Short Name	Reset Mode	Note
RESET_TYPE_3	00000000_H	RESET_TYPE_3		

16.3.8.2 GPT1 Core Timer T3 Control Register

Timer T3 Control Register

GPT12E_T3CON	Offset	Reset Value
Timer T3 Control Register	$0C_H$	see Table 252

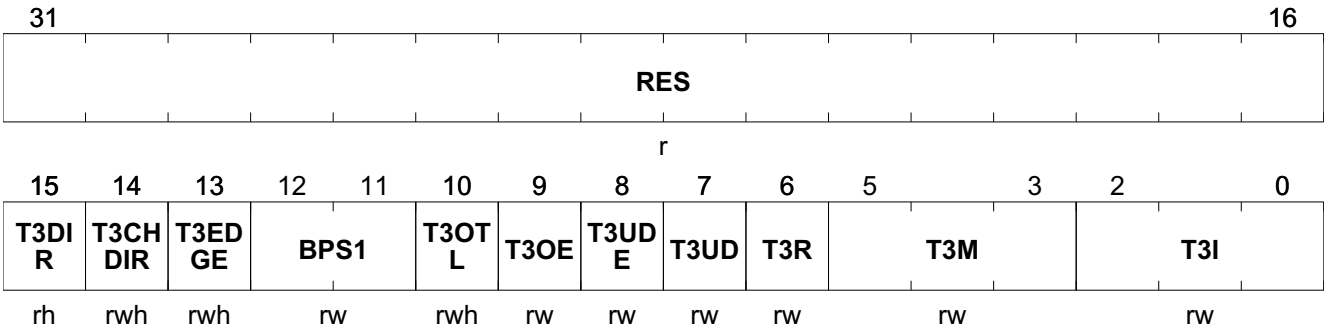

Field	Bits	Type	Description
RES	31:16	r	**Reserved** Read as 0; should be written with 0.
T3DIR	15	rh	**Timer T3 Rotation Direction Flag** 0_B **Up** Timer T3 counts up 1_B **Down** Timer T3 counts down
T3CHDIR	14	rwh	**Timer T3 Count Direction Change Flag** This bit is set each time the count direction of timer T3 changes. T3CHDIR must be cleared by software. 0_B **No change** No change of count direction was detected 1_B **Change** A change of count direction was detected

Field	Bits	Type	Description
T3EDGE	13	rwh	**Timer T3 Edge Detection Flag** The bit is set each time a count edge is detected. T3EDGE must be cleared by software. 0_B **No count** No count edge was detected 1_B **Count** A count edge was detected
BPS1	12:11	rw	**GPT1 Block Prescaler Control** Select basic clock for block GPT1 (see also **Section 16.3.5**) 00_B **8** f_{GPT}/8 01_B **4** f_{GPT}/4 10_B **32** f_{GPT}/32 11_B **16** f_{GPT}/16
T3OTL	10	rwh	**Timer T3 Overflow Toggle Latch** Toggles on each overflow/underflow of T3. Can be set or cleared by software (see separate description)
T3OE	9	rw	**Overflow/Underflow Output Enable** 0_B **Disabled** Alternate Output Function Disabled 1_B **T3OUT** State of T3 toggle latch is output on pin T3OUT
T3UDE	8	rw	**Timer T3 External Up/Down Enable**[1)] 0_B **T3UD** Count direction is controlled by bit T3UD; input T3EUD is disconnected 1_B **T3EUD** Count direction is controlled by input T3EUD
T3UD	7	rw	**Timer T3 Up/Down Control**[1)] 0_B **Up** Timer T3 counts up 1_B **Down** Timer T3 counts down
T3R	6	rw	**Timer T3 Input Run Bit** 0_B **Stop** Timer T3 stops 1_B **Run** Timer T3 runs
T3M	5:3	rw	**Timer T3 Input Mode Control** 000_B **Timer Mode** 001_B **Counter Mode** 010_B **Gated low** Gated Timer Mode with gate active low 011_B **Gated high** Gated Timer Mode with gate active high 100_B **Reserved** Do not use this combination 101_B **Reserved** Do not use this combination 110_B **Incremental Interface Mode** (Rotation Detection Mode) 111_B **Incremental Interface Mode** (Edge Detection Mode)
T3I	2:0	rw	**Timer T3 Input Parameter Selection** Depends on the operating mode, see respective sections for encoding: **Table 256** for Timer Mode and Gated Timer Mode **Table 257** for Counter Mode **Table 259** for Incremental Interface Mode

1) See **Table 269** for encoding of bits T3UD and T3UDE.

Table 252 RESET of GPT12E_T3CON

Register Reset Type	Reset Values	Reset Short Name	Reset Mode	Note
RESET_TYPE_3	00000000_H	RESET_TYPE_3		

16.3.8.3 GPT1 Auxiliary Timers T2/T4 Control Registers

Timer T2 Control Register

GPT12E_T2CON	Offset	Reset Value
Timer T2 Control Register	08_H	see Table 253

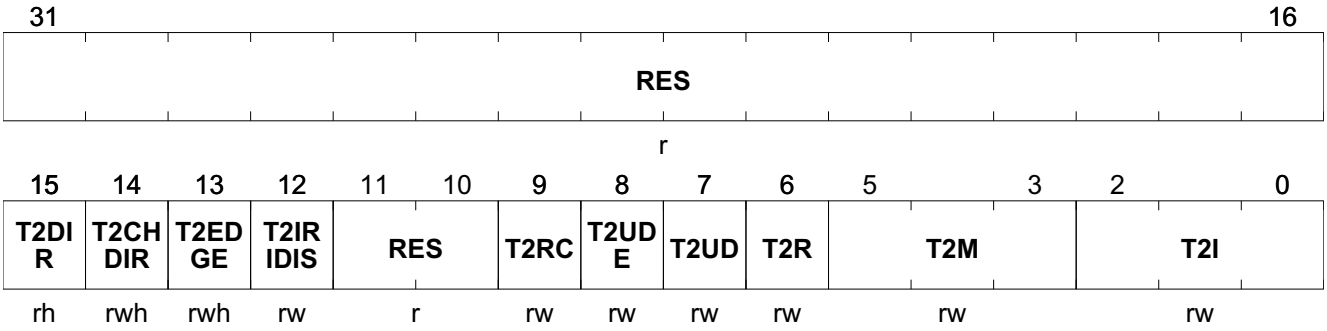

Field	Bits	Type	Description
RES	31:16	r	**Reserved** Read as 0; should be written with 0.
T2DIR	15	rh	**Timer T2 Rotation Direction** 0_B **Up** Timer T2 counts up 1_B **Down** Timer T2 counts down
T2CHDIR	14	rwh	**Timer T2 Count Direction Change** This bit is set each time the count direction of timer T2 changes. T2CHDIR must be cleared by software. 0_B **No change** No change of count direction was detected 1_B **Change** A change of count direction was detected
T2EDGE	13	rwh	**Timer T2 Edge Detection** The bit is set each time a count edge is detected. T2EDGE must be cleared by software. 0_B **No count** No count edge was detected 1_B **Count** A count edge was detected
T2IRIDIS	12	rw	**Timer T2 Interrupt Disable** 0_B **Enabled** Interrupt generation for T2CHDIR and T2EDGE interrupts in Incremental Interface Mode is enabled 1_B **Disabled** Interrupt generation for T2CHDIR and T2EDGE interrupts in Incremental Interface Mode is disabled
RES	11:10	r	**Reserved** Read as 0; should be written with 0.
T2RC	9	rw	**Timer T2 Remote Control** 0_B **T2R** Timer T2 is controlled by its own run bit T2R 1_B **T3R** Timer T2 is controlled by the run bit T3R of core timer T3, not by bit T2R

Field	Bits	Type	Description
T2UDE	8	rw	**Timer T2 External Up/Down Enable**[1)] 0_B **T2UD** Count direction is controlled by bit T2UD; input T2EUD is disconnected 1_B **T2EUD** Count direction is controlled by input T2EUD
T2UD	7	rw	**Timer T2 Up/Down Control**[1)] 0_B **Up** Timer T2 counts up 1_B **Down** Timer T2 counts down
T2R	6	rw	**Timer T2 Input Run Bit** 0_B **Stop** Timer T2 stops 1_B **Run** Timer T2 runs
T2M	5:3	rw	**Timer T2 Input Mode Control** 000_B **Timer Mode** 001_B **Counter Mode** 010_B **Gated low** Gated Timer Mode with gate active low 011_B **Gated high** Gated Timer Mode with gate active high 100_B **Reload Mode** 101_B **Capture Mode** 110_B **Incremental Interface Mode** (Rotation Detection Mode) 111_B **Incremental Interface Mode** (Edge Detection Mode)
T2I	2:0	rw	**Timer T2 Input Parameter Selection** Depends on the operating mode, see respective sections for encoding: **Table 256** for Timer Mode and Gated Timer Mode **Table 257** for Counter Mode **Table 259** for Incremental Interface Mode

1) See **Table 269** for encoding of bits T3UD and T3UDE.

Table 253 RESET of GPT12E_T2CON

Register Reset Type	Reset Values	Reset Short Name	Reset Mode	Note
RESET_TYPE_3	00000000_H	RESET_TYPE_3		

Timer T4 Control Register

GPT12E_T4CON	Offset	Reset Value
Timer T4 Control Register	10_H	see Table 254

31	30	29	28	27	26	25	24	23	22	21	20	19	18	17	16
RES															
r															

15	14	13	12	11	10	9	8	7	6	5	4	3	2	1	0
T4RDIR	T4CHDIR	T4EDGE	T4IRDIS	CLRT3EN	CLRT2EN	T4RC	T4UDE	T4UD	T4R	T4M			T4I		
rh	rwh	rwh	rw	rw	rw	rw	rw	rw	rw	rw			rw		

Field	Bits	Type	Description
RES	31:16	r	**Reserved** Read as 0; should be written with 0.
T4RDIR	15	rh	**Timer T4 Rotation Direction** 0_B **Up** Timer T4 counts up 1_B **Down** Timer T4 counts down
T4CHDIR	14	rwh	**Timer T4 Count Direction Change** The bit is set each time a count direction of timer T4 changes. T4EDGE must be cleared by software 0_B **No change** No change in count direction was detected 1_B **Change** A change in count direction was detected
T4EDGE	13	rwh	**Timer T4 Edge Direction** The bit is set each time a count edge is detected. T4EDGE has to be cleared by software 0_B **No count** No count edge was detected 1_B **Count** A count edge was detected
T4IRDIS	12	rw	**Timer T4 Interrupt Disable** 0_B **Enabled** Interrupt generation for T4CHDIR and T4EDGE interrupts in Incremental Interface Mode is enabled 1_B **Disabled** Interrupt generation for T4CHDIR and T4EDGE interrupts in Incremental Interface Mode is disabled
CLRT3EN	11	rw	**Clear Timer T3 Enable** Enables the automatic clearing of timer T3 upon a falling edge of the selected T4In input. 0_B **No effect** No effect of T4IN on Timer T3 1_B **Clear** A falling edge on T4In clears timer T3
CLRT2EN	10	rw	**Clear Timer T2 Enable** Enables the automatic clearing of timer T2 upon a falling edge of the selected T4EUD input. 0_B **No effect** No effect of T4EUD on timer T2 1_B **Clear** A falling edge on T4EUD clears timer T2
T4RC	9	rw	**Timer T4 Remote Control** 0_B **T4R** Timer T4 is controlled by its own run bit T4R 1_B **T3R** Timer T4 is controlled by the run bit T3R of core timer T3, but not by bit T4R
T4UDE	8	rw	**Timer T4 External Up/Down Enable**[1)] 0_B **T4UD** Count direction is controlled by bit T4UD; input T4EUD is disconnected 1_B **T4EUD** Count direction is controlled by input T4EUD
T4UD	7	rw	**Timer T2 Up/Down Control**[1)] 0_B **Up** Timer T2 counts up 1_B **Down** Timer T2 counts down
T4R	6	rw	**Timer T4 Input Run Bit** 0_B **Stop** Timer T4 stops 1_B **Run** Timer T4 runs

Field	Bits	Type	Description
T4M	5:3	rw	**Timer T4 Mode Control (Basic Operating Mode)** 000_B **Timer Mode** 001_B **Counter Mode** 010_B **Gated low** Gated Timer Mode with gate active low 011_B **Gated high** Gated Timer Mode with gate active high 100_B **Reload Mode** 101_B **Capture Mode** 110_B **Incremental Interface Mode** (Rotation Detection Mode) 111_B **Incremental Interface Mode** (Edge Detection Mode)
T4I	2:0	rw	**Timer T4 Input Parameter Selection** Depends on the operating mode, see respective sections for encoding: **Table 256** for Timer Mode and Gated Timer Mode **Table 257** for Counter Mode **Table 259** for Incremental Interface Mode

1) See **Table 269** for encoding of bits T3UD and T3UDE.

Table 254 RESET of GPT12E_T4CON

Register Reset Type	Reset Values	Reset Short Name	Reset Mode	Note
RESET_TYPE_3	00000000_H	RESET_TYPE_3		

16.3.8.4 Encoding

Encoding of GPT1 Timer Count Direction Control

Table 255 GPT1 Timer Count Direction Control

Pin TxEUD	Bit TxUDE	Bit TxUD	Count Direction	Bit TxRDIR
X	0	0	Count Up	0
X	0	1	Count Down	1
0	1	0	Count Up	0
1	1	0	Count Down	1
0	1	1	Count Down	1
1	1	1	Count Up	0

Timer Mode and Gated Timer Mode: Encoding of GPT1 Overall Prescaler Factor

Table 256 GPT1 Overall Prescaler Factors for Internal Count Clock (Timer Mode and Gated Timer Mode)

Individual Prescaler for Tx	Common Prescaler for Module Clock[1]			
	BPS1 = 01_B	**BPS1 = 00_B**	**BPS1 = 11_B**	**BPS1 = 10_B**
TxI = 000_B	4	8	16	32
TxI = 001_B	8	16	32	64
TxI = 010_B	16	32	64	128
TxI = 011_B	32	64	128	256

Table 256 GPT1 Overall Prescaler Factors for Internal Count Clock (Timer Mode and Gated Timer Mode)

Individual Prescaler for Tx	Common Prescaler for Module Clock[1)]			
	BPS1 = 01_B	**BPS1 = 00_B**	**BPS1 = 11_B**	**BPS1 = 10_B**
TxI = 100_B	64	128	256	512
TxI = 101_B	128	256	512	1024
TxI = 110_B	256	512	1024	2048
TxI = 111_B	512	1024	2048	4096

1) Please note the non-linear encoding of bitfield BPS1.

Counter Mode: Encoding of GPT1 Input Edge Selection

Table 257 GPT1 Core Timer T3 Input Edge Selection (Counter Mode)

T3I	Triggering Edge for Counter Increment/Decrement
000_B	None. Counter T3 is disabled
001_B	Positive transition (rising edge) on T3IN
010_B	Negative transition (falling edge) on T3IN
011_B	Any transition (rising or falling edge) on T3IN
$1XX_B$	Reserved. Do not use this combination

Table 258 GPT1 Auxiliary Timers T2/T4 Input Edge Selection (Counter Mode)

T2I/T4I	Triggering Edge for Counter Increment/Decrement
$X00_B$	None. Counter Tx is disabled
001_B	Positive transition (rising edge) on TxIN
010_B	Negative transition (falling edge) on TxIN
011_B	Any transition (rising or falling edge) on TxIN
101_B	Positive transition (rising edge) of T3 toggle latch T3OTL
110_B	Negative transition (falling edge) of T3 toggle latch T3OTL
111_B	Any transition (rising or falling edge) of T3 toggle latch T3OTL

Incremental Interface Mode: Encoding of Input Edge Selection

Table 259 GPT1 Core Timer T3 Input Edge Selection (Incremental Interface Mode)

T3I	Triggering Edge for Counter Increment/Decrement
000_B	None. Counter T3 stops.
001_B	Any transition (rising or falling edge) on T3IN.
010_B	Any transition (rising or falling edge) on T3EUD.
011_B	Any transition (rising or falling edge) on any T3 input (T3IN or T3EUD).
$1XX_B$	Reserved. Do not use this combination.

16.3.8.5 GPT1 Timer Interrupt Control Registers

The Interrupt Control and Status register are located in the SCU.

16.4 Timer Block GPT2

From a programmer's point of view, the GPT2 block is represented by a set of SFRs as summarized below. Those portions of port and direction registers which are used for alternate functions by the GPT2 block are shaded.

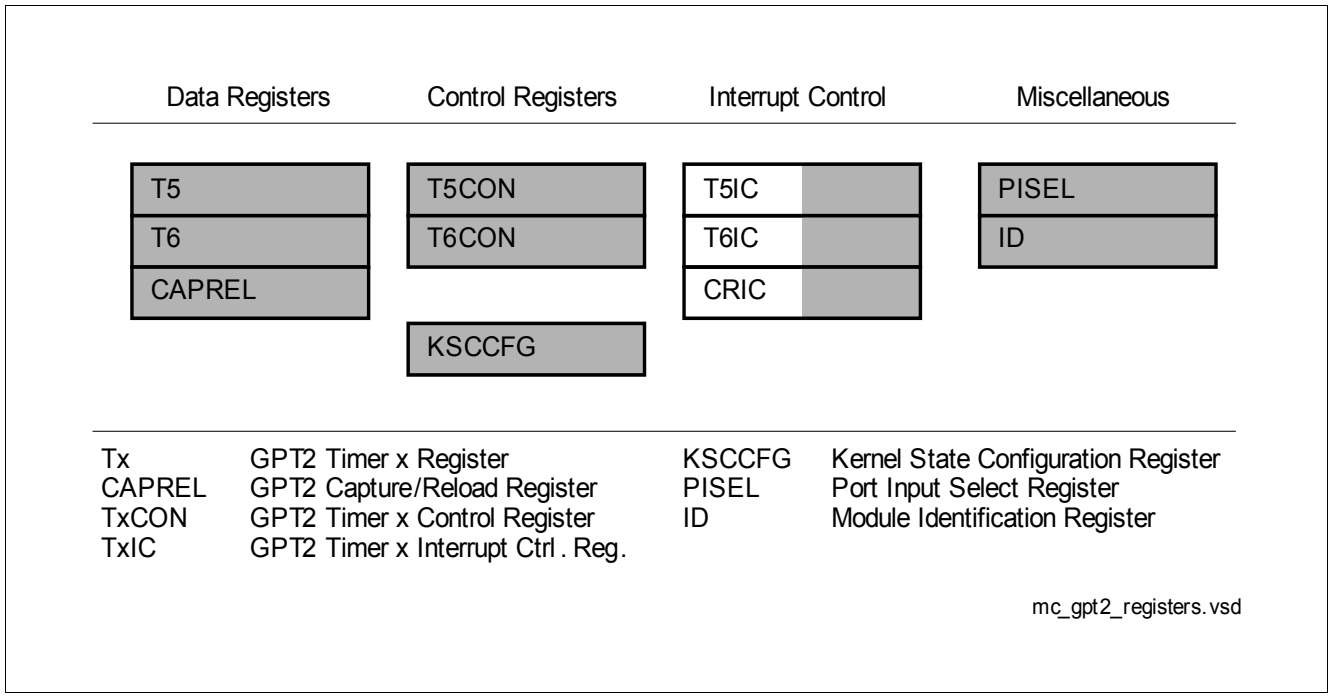

Figure 104 SFRs Associated with Timer Block GPT2

Both timers of block GPT2 (T5, T6) can run in one of 3 basic modes: Timer Mode, Gated Timer Mode, or Counter Mode. All timers can count up or down. Each timer of GPT2 is controlled by a separate control register TxCON.

Each timer has an input pin TxIN (alternate pin function) associated with it, which serves as the gate control in Gated Timer Mode, or as the count input in Counter Mode. The count direction (up/down) may be programmed via software or may be dynamically altered by a signal at the External Up/Down control input TxEUD (alternate pin function). An overflow/underflow of core timer T6 is indicated by the Output Toggle Latch T6OTL, whose state may be output on the associated pin T6OUT (alternate pin function). The auxiliary timer T5 may additionally be concatenated with core timer T6 (through T6OTL).

The Capture/Reload register CAPREL can be used to capture the contents of timer T5, or to reload timer T6. A special mode facilitates the use of register CAPREL for both functions at the same time. This mode allows frequency multiplication. The capture function is triggered by the input pin CAPIN, or by GPT1 timer's T3 input lines T3IN and T3EUD. The reload function is triggered by an overflow or underflow of timer T6. Overflows/underflows of timer T6 may also clock the timers of the CAPCOM units.

The current contents of each timer can be read or modified by the CPU by accessing the corresponding timer count registers T5 or T6, located in the SFR space (see **Section 16.4.8.1**). When any of the timer registers is written to by the CPU in the state immediately preceding a timer increment, decrement, reload, or capture operation, the CPU write operation has priority in order to guarantee correct results.

The interrupts of GPT2 are controlled through the GPTM1IEN and GPTM1IRC. These registers are not part of the GPT2 block.

The input and output lines of GPT2 are connected to pins. The control registers for the port functions are located in the respective port modules.

*Note: The timing requirements for external input signals can be found in **Section 16.4.6**, **Section 16.6.1** summarizes the module interface signals, including pins.*

16.4.1 GPT2 Core Timer T6 Control

The current contents of the core timer T6 are reflected by its count register T6. This register can also be written to by the CPU, for example, to set the initial start value.

The core timer T6 is configured and controlled via its control register T6CON.

Timer T6 Run Control

The core timer T6 can be started or stopped by software through bit T6R (timer T6 run bit). This bit is relevant in all operating modes of T6. Setting bit T6R will start the timer, clearing bit T6R stops the timer.

In Gated Timer Mode, the timer will only run if T6R = 1 and the gate is active (high or low, as programmed).

Note: When bit T5RC in timer control register T5CON is set, bit T6R will also control (start and stop) the Auxiliary Timer T5.

Count Direction Control

The count direction of the GPT2 timers (core timer and auxiliary timer) can be controlled either by software or by the external input pin TxEUD (Timer Tx External Up/Down Control Input). These options are selected by bits TxUD and TxUDE in the respective control register TxCON. When the up/down control is provided by software (bit TxUDE = 0), the count direction can be altered by setting or clearing bit TxUD. When bit TxUDE = 1, pin TxEUD is selected to be the controlling source of the count direction. However, bit TxUD can still be used to reverse the actual count direction, as shown in **Table 269**. The count direction can be changed regardless of whether or not the timer is running.

Note: When pin TxEUD is used as external count direction control input, it must be configured as input.

Timer T6 Output Toggle Latch

The overflow/underflow signal of timer T6 is connected to a block named ‘Toggle Latch’, shown in the Timer Mode diagrams. **Figure 105** illustrates the details of this block. An overflow or underflow of T6 will clock two latches: The first latch represents bit T6OTL in control register T6CON. The second latch is an internal latch toggled by T6OTL’s output. Both latch outputs are connected to the input control block of the auxiliary timer T5. The output level of the shadow latch will match the output level of T6OTL, but is delayed by one clock cycle. When the T6OTL value changes, this will result in a temporarily different output level from T6OTL and the shadow latch, which can trigger the selected count event in T5.

When software writes to T6OTL, both latches are set or cleared simultaneously. In this case, both signals to the auxiliary timers carry the same level and no edge will be detected. Bit T6OE (overflow/underflow output enable) in register T6CON enables the state of T6OTL to be monitored via an external pin T6OUT. When T6OTL is linked to an external port pin (must be configured as output), T6OUT can be used to control external HW. If T6OE = 1, pin T6OUT outputs the state of T6OTL. If T6OE = 0, pin T6OUT outputs a high level (while it selects the timer output signal).

As can be seen from **Figure 105**, when latch T6OTL is modified by software to determine the state of the output line, also the internal shadow latch is set or cleared accordingly. Therefore, no trigger condition is detected by T5 in this case.

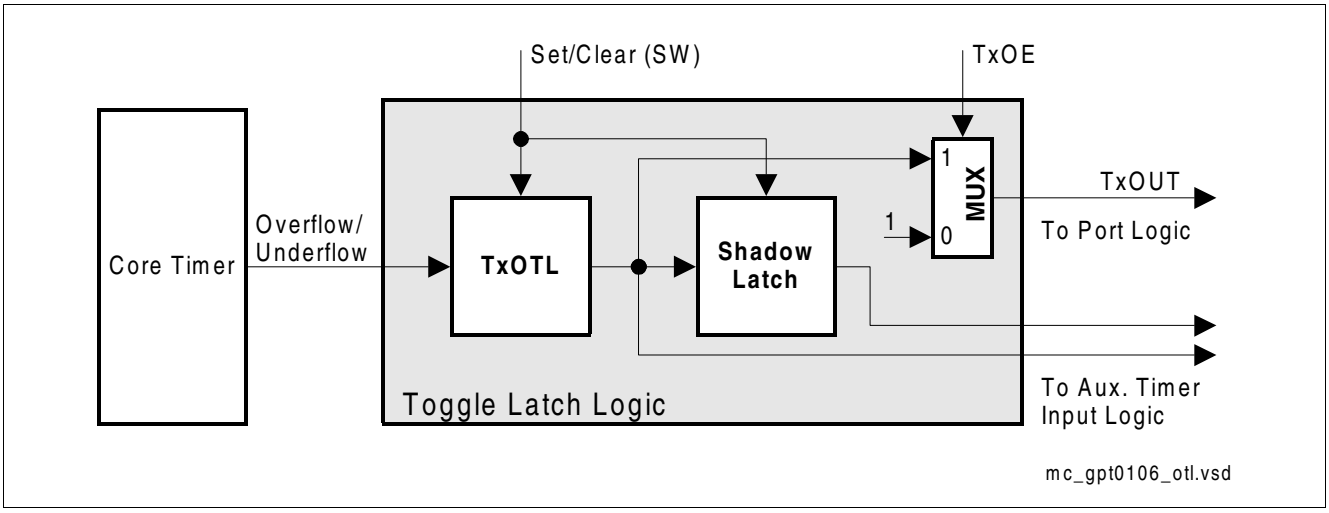

Figure 105 Block Diagram of the Toggle Latch Logic of Core Timer T6 (x = 6)

Note: T6 is also used to clock the timers in the CAPCOM units. For this purpose, there is a direct internal connection between the T6 overflow/underflow line and the CAPCOM timers (signal T6OUF).

16.4.2 GPT2 Core Timer T6 Operating Modes

Timer T6 can operate in one of several modes.

Timer T6 in Timer Mode

Timer mode for the core timer T6 is selected by setting bitfield T6M in register T6CON to 000_B. In this mode, T6 is clocked with the module's input clock f_{GPT} divided by two programmable prescalers controlled by bitfields BPS2 and T6I in register T6CON. Please see **Section 16.4.6** for details on the input clock options.

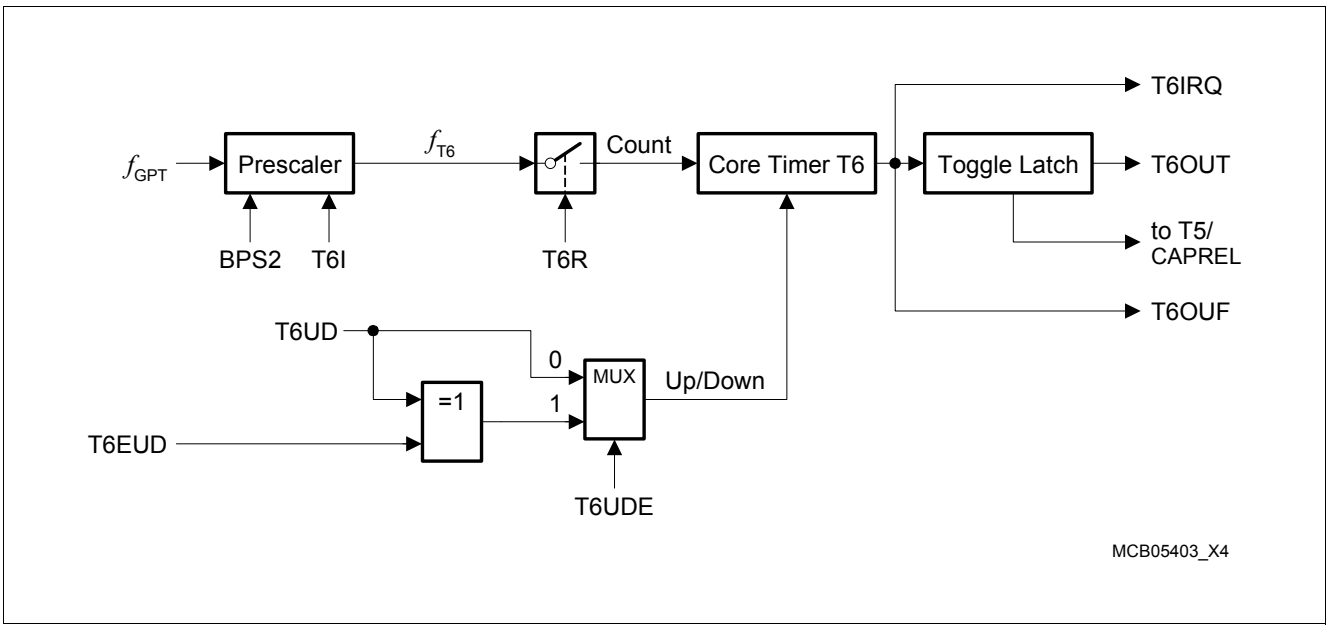

Figure 106 Block Diagram of Core Timer T6 in Timer Mode

Timer T6 in Gated Timer Mode

Gated Timer Mode for the core timer T6 is selected by setting bitfield T6M in register T6CON to 010_B or 011_B. Bit T6M.0 (T6CON.3) selects the active level of the gate input. The same options for the input frequency are available in Gated Timer Mode as in Timer Mode (see **Section 16.4.6**). However, the input clock to the timer in this mode is gated by the external input pin T6IN (Timer T6 External Input).
To enable this operation, the associated pin T6IN must be configured as input.

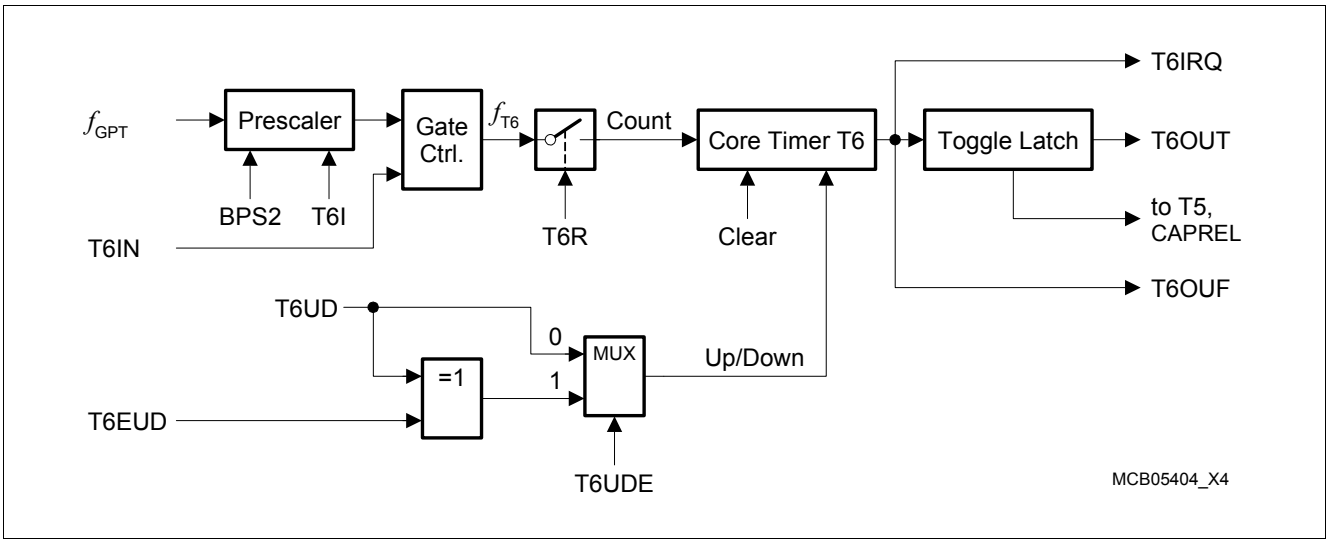

Figure 107 Block Diagram of Core Timer T6 in Gated Timer Mode

If T6M = 010_B, the timer is enabled when T6IN shows a low level. A high level at this line stops the timer. If T6M = 011_B, line T6IN must have a high level in order to enable the timer. Additionally, the timer can be turned on or off by software using bit T6R. The timer will only run if T6R is 1 and the gate is active. It will stop if either T6R is 0 or the gate is inactive.

Note: A transition of the gate signal at pin T6IN does not cause an interrupt request.

Timer T6 in Counter Mode

Counter Mode for the core timer T6 is selected by setting bitfield T6M in register T6CON to 001_B. In Counter Mode, timer T6 is clocked by a transition at the external input pin T6IN. The event causing an increment or decrement of the timer can be a positive, a negative, or both a positive and a negative transition at this line. Bitfield T6I in control register T6CON selects the triggering transition (see **Table 272**).

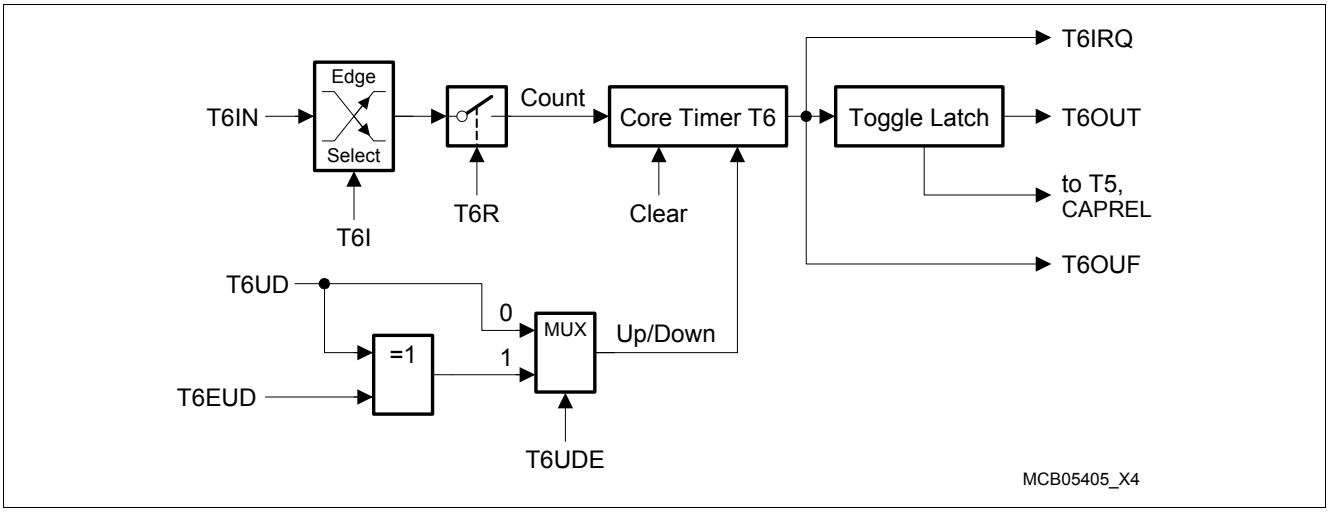

Figure 108 Block Diagram of Core Timer T6 in Counter Mode

For Counter Mode operation, pin T6IN must be configured as input. The maximum input frequency allowed in Counter Mode depends on the selected prescaler value. To ensure that a transition of the count input signal applied to T6IN is recognized correctly, its level must be held high or low for a minimum number of module clock cycles before it changes. This information can be found in **Section 16.4.6**.

16.4.3 GPT2 Auxiliary Timer T5 Control

Auxiliary timer T5 can be configured for Timer Mode, Gated Timer Mode, or Counter Mode with the same options for the timer frequencies and the count signal as the core timer T6. In addition to these 3 counting modes, the auxiliary timer can be concatenated with the core timer. The contents of T5 may be captured to register CAPREL upon an external or an internal trigger. The start/stop function of the auxiliary timers can be remotely controlled by the T6 run control bit. Several timers may thus be controlled synchronously.

The current contents of the auxiliary timer are reflected by its count register T5. This register can also be written to by the CPU, for example, to set the initial start value.

The individual configurations for timer T5 are determined by its control register T5CON. Some bits in this register also control the function of the CAPREL register. Note that functions which are present in all timers of block GPT2 are controlled in the same bit positions and in the same manner in each of the specific control registers.

Note: The auxiliary timer has no output toggle latch and no alternate output function.

Timer T5 Run Control

The auxiliary timer T5 can be started or stopped by software in two different ways:

- Through the associated timer run bit (T5R). In this case it is required that the respective control bit T5RC = 0.
- Through the core timer's run bit (T6R). In this case the respective remote control bit must be set (T5RC = 1).

The selected run bit is relevant in all operating modes of T5. Setting the bit will start the timer, clearing the bit stops the timer.

In Gated Timer Mode, the timer will only run if the selected run bit is set and the gate is active (high or low, as programmed).

Note: If remote control is selected T6R will start/stop timer T6 and the auxiliary timer T5 synchronously.

16.4.4 GPT2 Auxiliary Timer T5 Operating Modes

The operation of the auxiliary timer in the basic operating modes is almost identical with the core timer's operation, with very few exceptions. Additionally, some combined operating modes can be selected.

Timer T5 in Timer Mode

Timer Mode for the auxiliary timer T5 is selected by setting its bitfield T5M in register T5CON to 000_B.

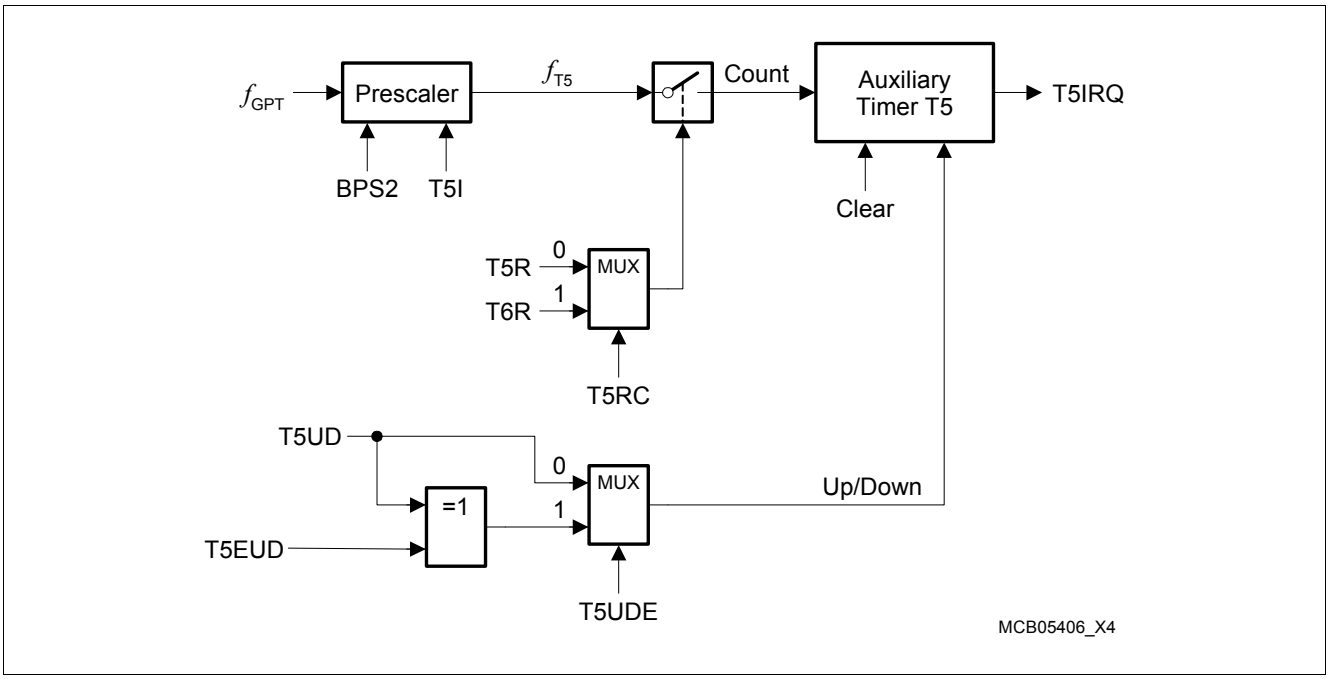

Figure 109 Block Diagram of Auxiliary Timer T5 in Timer Mode

Timer T5 in Gated Timer Mode

Gated Timer Mode for the auxiliary timer T5 is selected by setting bitfield T5M in register T5CON to 010_B or 011_B. Bit T5M.0 (T5CON.3) selects the active level of the gate input.

Note: A transition of the gate signal at line T5IN does not cause an interrupt request.

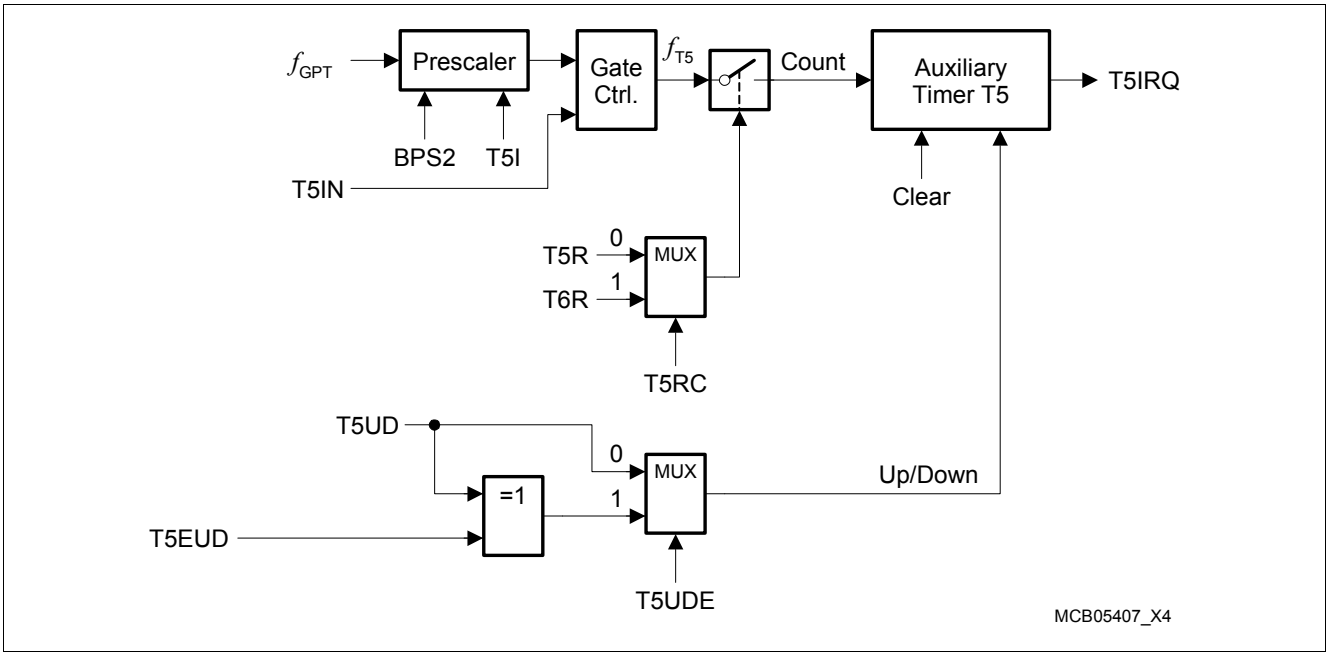

Figure 110 Block Diagram of Auxiliary Timer T5 in Gated Timer Mode

Note: There is no output toggle latch for T5.
Start/stop of the auxiliary timer can be controlled locally or remotely.

Timer T5 in Counter Mode

Counter Mode for auxiliary timer T5 is selected by setting bitfield T5M in register T5CON to 001_B. In Counter Mode, the auxiliary timer can be clocked either by a transition at its external input line T5IN, or by a transition of timer T6's toggle latch T6OTL. The event causing an increment or decrement of a timer can be a positive, a negative, or both a positive and a negative transition at either the respective input pin or at the toggle latch. Bitfield T5I in control register T5CON selects the triggering transition (see **Table 271**).

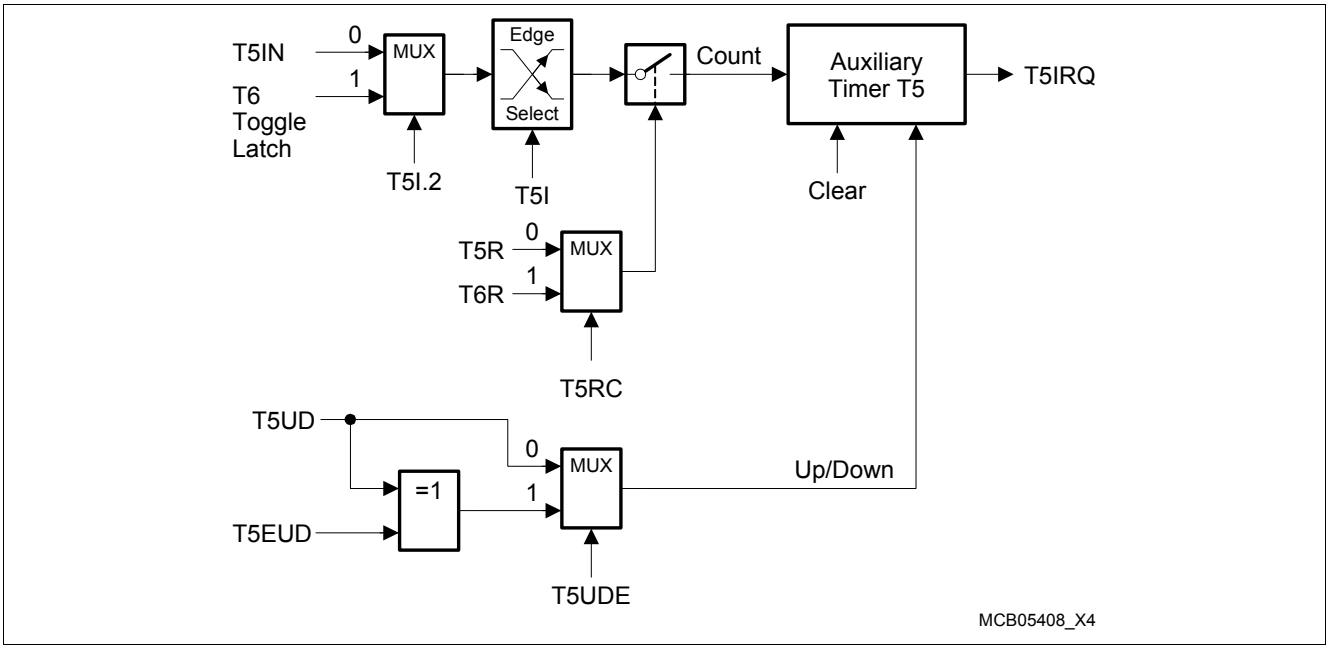

Figure 111 Block Diagram of Auxiliary Timer T5 in Counter Mode

Note: Only state transitions of T6OTL which are caused by the overflows/underflows of T6 will trigger the counter function of T5. Modifications of T6OTL via software will NOT trigger the counter function of T5.

For counter operation, pin T5IN must be configured as input. The maximum input frequency allowed in Counter Mode depends on the selected prescaler value. To ensure that a transition of the count input signal applied to T5IN is recognized correctly, its level must be held high or low for a minimum number of module clock cycles before it changes. This information can be found in **Section 16.4.6**.

Timer Concatenation

Using the toggle bit T6OTL as a clock source for the auxiliary timer in Counter Mode concatenates the core timer T6 with the auxiliary timer T5. This concatenation forms either a 32-bit or a 33-bit timer/counter, depending on which transition of T6OTL is selected to clock the auxiliary timer.

- **32-bit Timer/Counter:** If both a positive and a negative transition of T6OTL are used to clock the auxiliary timer, this timer is clocked on every overflow/underflow of the core timer T6. Thus, the two timers form a 32-bit timer.
- **33-bit Timer/Counter:** If either a positive or a negative transition of T6OTL is selected to clock the auxiliary timer, this timer is clocked on every second overflow/underflow of the core timer T6. This configuration forms a 33-bit timer (16-bit core timer + T6OTL + 16-bit auxiliary timer).
  As long as bit T6OTL is not modified by software, it represents the state of the internal toggle latch, and can be regarded as part of the 33-bit timer.

The count directions of the two concatenated timers are not required to be the same. This offers a wide variety of different configurations.

T6, which represents the low-order part of the concatenated timer, can operate in Timer Mode, Gated Timer Mode or Counter Mode in this case.

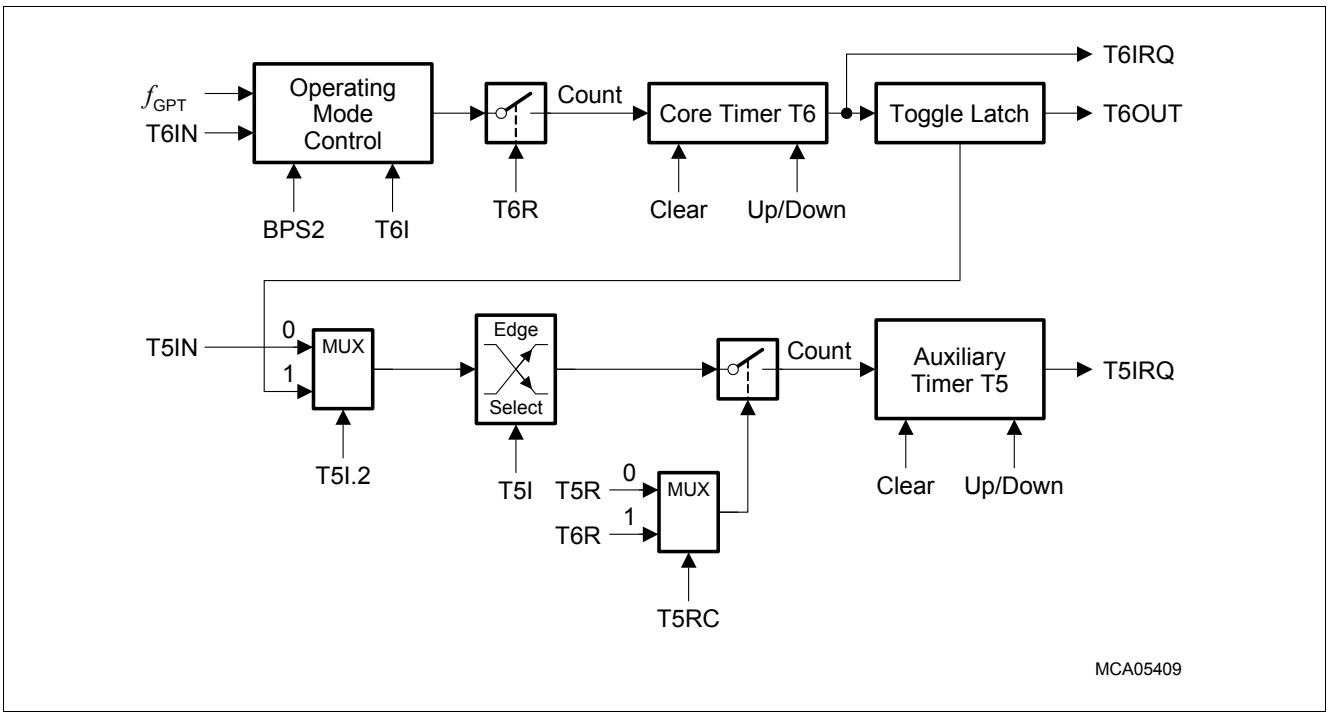

Figure 112 Concatenation of Core Timer T6 and Auxiliary Timer T5

16.4.5 GPT2 Register CAPREL Operating Modes

The Capture/Reload register CAPREL can be used to capture the contents of timer T5, or to reload timer T6. A special mode facilitates the use of register CAPREL for both functions at the same time. This mode allows frequency multiplication. The capture function is triggered by CAPIN, by T3IN and T3EUD, or by read GPT1 timers. The reload function is triggered by an overflow or underflow of timer T6.

In addition to the capture function, the capture trigger signal can also be used to clear the contents of timers T5 and T6 individually.

The functions of register CAPREL are controlled via several bit(field)s in the timer control registers T5CON and T6CON.

Capture/Reload Register CAPREL in Capture Mode

Capture mode for register CAPREL is selected by setting bit T5SC in control register T5CON (set bitfield CI in register T5CON to a non-zero value to select a trigger signal). In capture mode, the contents of the auxiliary timer T5 are latched into register CAPREL in response to a signal transition at the selected external input pin(s). Bit CT3 selects the external input line CAPIN or the input lines T3IN and/or T3EUD of GPT1 timer T3 as the source for a capture trigger. Either a positive, a negative, or both a positive and a negative transition at line CAPIN can be selected to trigger the capture function, or transitions on input T3IN or input T3EUD or both inputs, T3IN and T3EUD. The active edge is controlled by bitfield CI in register T5CON. **Table 260** summarizes these options.

Table 260 CAPREL Register Input Edge Selection

CT3	CI	Triggering Signal/Edge for Capture Mode
X	00_B	None. Capture Mode is disabled.
0	01_B	Positive transition (rising edge) on CAPIN.[1)]
0	10_B	Negative transition (falling edge) on CAPIN.
0	11_B	Any transition (rising or falling edge) on CAPIN.
1	01_B	Any transition (rising or falling edge) on T3IN.
1	10_B	Any transition (rising or falling edge) on T3EUD.
1	11_B	Any transition (rising or falling edge) on T3IN or T3EUD.

1) Rising edge must be selected if capturing is triggered by the internal GPT1 read signals (see register PISEL and **“Combined Capture Modes” on Page 479**).

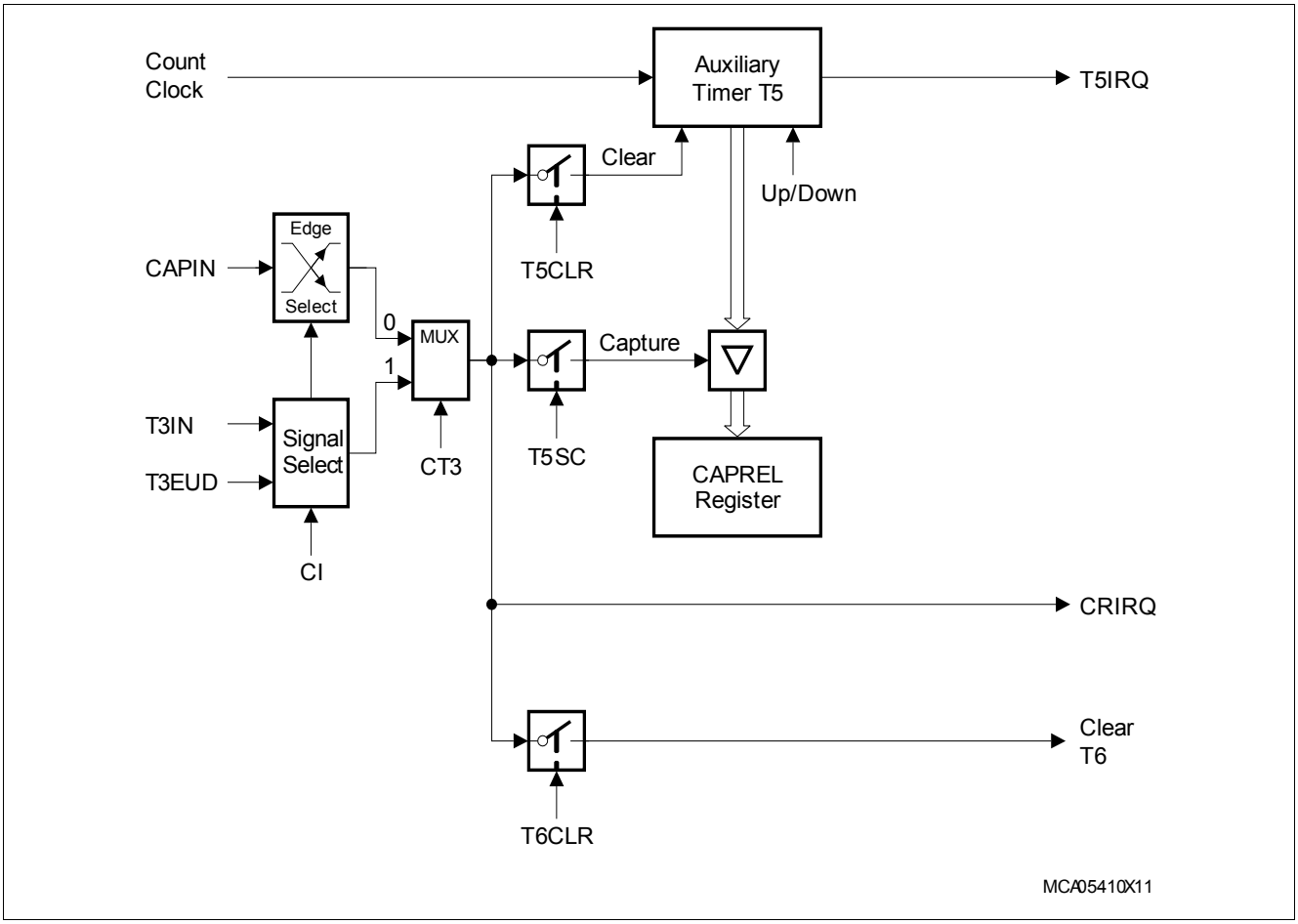

Figure 113 Capture/Reload Register CAPREL in Capture Mode

When a selected trigger is detected, the contents of the auxiliary timer T5 are latched into register CAPREL and the interrupt request line CRIRQ is activated. The same event can optionally clear timer T5 and/or timer T6. This option is enabled by bit T5CLR in register T5CON and bit T6CLR in register T6CON, respectively. If TxCLR = 0 the contents of timer Tx is not affected by a capture. If TxCLR = 1 timer Tx is cleared after the current timer T5 value has been latched into register CAPREL.

Note: Bit T5SC only controls whether or not a capture is performed. If T5SC is cleared the external input pin(s) can still be used to clear timer T5 and/or T6, or as external interrupt input(s). This interrupt is controlled by the CAPREL interrupt control register GPTM1IEN and GPTM1IRC.

When capture triggers T3IN or T3EUD are enabled (CT3 = 1), register CAPREL captures the contents of T5 upon transitions of the selected input(s). These values can be used to measure T3's input signals. This is useful, for example, when T3 operates in Incremental Interface Mode, in order to derive dynamic information (speed, acceleration) from the input signals.

For capture mode operation, the selected pins CAPIN, T3IN, or T3EUD must be configured as input. To ensure that a transition of a trigger input signal applied to one of these inputs is recognized correctly, its level must be held high or low for a minimum number of module clock cycles, detailed in **Section 16.4.6**.

Capture/Reload Register CAPREL in Reload Mode

Reload mode for register CAPREL is selected by setting bit T6SR in control register T6CON. In reload mode, the core timer T6 is reloaded with the contents of register CAPREL, triggered by an overflow or underflow of T6. This will not activate the interrupt request line CRIRQ associated with the CAPREL register. However, interrupt request line T6IRQ will be activated, indicating the overflow/underflow of T6.

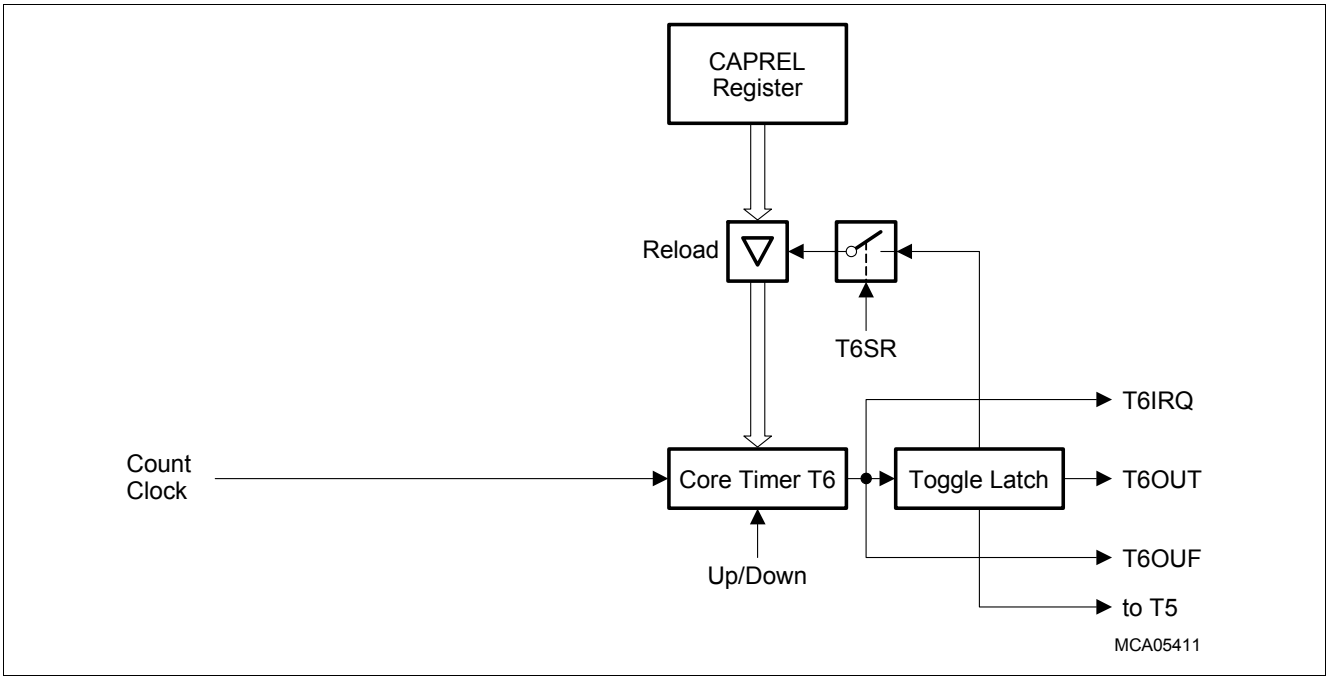

Figure 114 Capture/Reload Register CAPREL in Reload Mode

Capture/Reload Register CAPREL in Capture-And-Reload Mode

Since the reload function and the capture function of register CAPREL can be enabled individually by bits T5SC and T6SR, the two functions can be enabled simultaneously by setting both bits. This feature can be used to generate an output frequency that is a multiple of the input frequency.

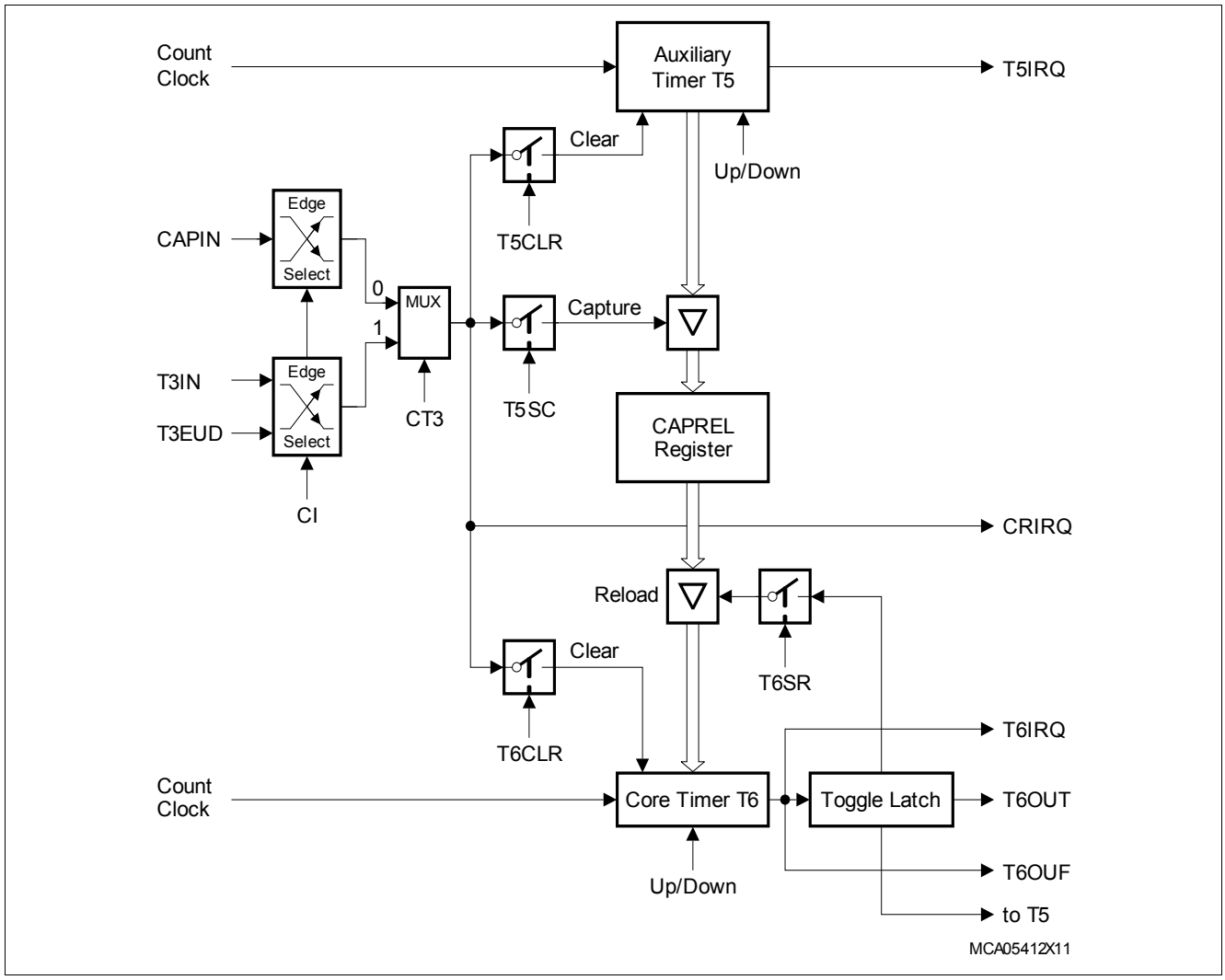

Figure 115 Capture/Reload Register CAPREL in Capture-And-Reload Mode

This combined mode can be used to detect consecutive external events which may occur aperiodically, but where a finer resolution, that means, more ‘ticks’ within the time between two external events is required.

For this purpose, the time between the external events is measured using timer T5 and the CAPREL register. Timer T5 runs in Timer Mode counting up with a frequency of e.g. $f_{GPT}/32$. The external events are applied to pin CAPIN. When an external event occurs, the contents of timer T5 are latched into register CAPREL and timer T5 is cleared (T5CLR = 1). Thus, register always contains the correct time between two events, measured in timer T5 increments. Timer T6, which runs in Timer Mode counting down with a frequency of e.g. $f_{GPT}/4$, uses the value in register CAPREL to perform a reload on underflow. This means, the value in register CAPREL represents the time between two underflows of timer T6, now measured in timer T6 increments. Since (in this example) timer T6 runs 8 times faster than timer T5, it will underflow 8 times within the time between two external events. Thus, the underflow signal of timer T6 generates 8 ‘ticks’. Upon each underflow, the interrupt request line T6IRQ will be activated and bit T6OTL will be toggled. The state of T6OTL may be output on pin T6OUT. This signal has 8 times more transitions than the signal which is applied to pin CAPIN.

Note: The underflow signal of Timer T6 can furthermore be used to clock one or more of the timers of the CAPCOM units, which gives the user the possibility to set compare events based on a finer resolution than that of the external events. This connection is accomplished via signal T6OUF.

Capture Correction

A certain deviation of the output frequency is generated by the fact that timer T5 will count actual time units (e.g. T5 running at 1 MHz will count up to the value $64_H/100_D$ for a 10 kHz input signal), while T6OTL will only toggle upon an underflow of T6 (i.e. the transition from 0000_H to $FFFF_H$). In the above mentioned example, T6 would count down from 64_H, so the underflow would occur after 101 timing ticks of T6. The actual output frequency then is 79.2 kHz, instead of the expected 80 kHz.

This deviation can be compensated for by using T6 overflows. In this case, T5 counts down and T6 counts up. Upon a signal transition on pin CAPIN, the count value in T5 is captured into CAPREL and T5 is cleared to 0000_H. In its next clock cycle, T5 underflows to $FFFF_H$, and continues to count down with the following clocks. T6 is reloaded from CAPREL upon an overflow, and continues to count up with its following clock cycles (8 times faster in the above example). In this case, T5 and T6 count the same number of steps with their respective internal count frequency.

In the above example, T5 running at 1 MHz will count down to the value $FF9C_H/-100_D$ for a 10 kHz input signal applied at CAPIN, while T6 counts up from $FF9C_H$ through $FFFF_H$ to 0000_H. So the overflow occurs after 100 timing ticks of T6, and the actual output frequency at T6OUT then is the expected 80 kHz.

However, in this case CAPREL does not directly contain the time between two CAPIN events, but rather its 2's complement. Software will have to convert this value, if it is required for the operation.

Combined Capture Modes

For incremental interface applications in particular, several timer features can be combined to obtain dynamic information such as speed, acceleration, or deceleration. The current position itself can be obtained directly from the timer register (T2, T3, T4).

The time information to determine the dynamic parameters is generated by capturing the contents of the free-running timer T5 into register CAPREL. Two trigger sources for this event can be selected:

- Capture trigger on sensor signal transitions
- Capture trigger on position read operations

Capturing on sensor signal transitions is available for timer T3 inputs. This mode is selected by setting bit CT3 and selecting the intended signal(s) via bitfield CI in register T5CON. CAPREL then indicates the time between two selected transitions (measured in T5 counts).

Capturing on position read operations is available for timers T2, T3, and T4. This mode is selected by clearing bit CT3 and selecting the rising edge via bitfield CI in register T5CON. Bitfield ISCAPIN in register PISEL then selects either a read access from T3 or a read access from any of T2 or T3 or T4. CAPREL then indicates the time between two read accesses.

These operating modes directly support the measurement of position and rotational speed. Acceleration and deceleration can then be determined by evaluating subsequent speed measurements.

16.4.6 GPT2 Clock Signal Control

All actions within the timer block GPT2 are triggered by transitions of its basic clock. This basic clock is derived from the module clock f_{GPT} by a basic block prescaler, controlled by bitfield BPS2 in register T6CON (see **Figure 86**). The count clock can be generated in two different ways:

- **Internal count clock**, derived from GPT2's basic clock via a programmable prescaler, is used for (gated) Timer Mode.
- **External count clock**, derived from the timer's input pin(s), is used for Counter Mode.

For both ways, the basic clock determines the maximum count frequency and the timer's resolution:

Table 261 Basic Clock Selection for Block GPT2

Block Prescaler[1]	BPS2 = 01_B	BPS2 = 00_B[2]	BPS2 = 11_B	BPS2 = 10_B
Prescaling Factor for GPT2: F(BPS2)	F(BPS2) = 2	F(BPS2) = 4	F(BPS2) = 8	F(BPS2) = 16
Maximum External Count Frequency	$f_{GPT}/4$	$f_{GPT}/8$	$f_{GPT}/16$	$f_{GPT}/32$
Input Signal Stable Time	$2 \times t_{GPT}$	$4 \times t_{GPT}$	$8 \times t_{GPT}$	$16 \times t_{GPT}$

1) Please note the non-linear encoding of bitfield BPS2.
2) Default after reset.

Note: When initializing the GPT2 block, and the block prescaler BPS2 in T6CON needs to be set to a value different from its reset value (00_B), it must be initialized first before any mode involving external trigger signals is configured. These modes include counter, capture, and reload mode. Otherwise, unintended count/capture/reload events may occur.
In this case (e.g. when changing BPS2 during operation of the GPT2 block), disable related interrupts before modification of BPS2, and afterwards clear the corresponding service request flags and re-initialize those registers (T5, T6, CAPREL) that might be affected by a count/capture/reload event.

Internal Count Clock Generation

In Timer Mode and Gated Timer Mode, the count clock for each GPT2 timer is derived from the GPT2 basic clock by a programmable prescaler, controlled by bitfield TxI in the respective timer's control register TxCON.

The count frequency f_{Tx} for a timer Tx and its resolution r_{Tx} are scaled linearly with lower clock frequencies, as can be seen from the following formula:

$$f_{Tx} = \frac{f_{GPT}}{F(BPS2) \bullet 2^{<TxI>}} \qquad r_{Tx}[\mu s] = \frac{F(BPS2) \bullet 2^{<TxI>}}{f_{GPT}[MHz]} \tag{6}$$

The effective count frequency depends on the common module clock prescaler factor F(BPS2) as well as on the individual input prescaler factor $2^{<TxI>}$. **Table 270** summarizes the resulting overall divider factors for a GPT2 timer that result from these cascaded prescalers.

Table 262 lists GPT2 timer's parameters (such as count frequency, resolution, and period) resulting from the selected overall prescaler factor and the module clock f_{GPT}. Note that some numbers may be rounded.

Table 262 GPT2 Timer Parameters

System Clock = 10 MHz			Overall Divider Factor	System Clock = 40 MHz		
Frequency	Resolution	Period		Frequency	Resolution	Period
5.0 MHz	200 ns	13.11 ms	2	20.0 MHz	50 ns	3.28 ms
2.5 MHz	400 ns	26.21 ms	4	10.0 MHz	100 ns	6.55 ms
1.25 MHz	800 ns	52.43 ms	8	5.0 MHz	200 ns	13.11 ms
625.0 kHz	1.6 µs	104.9 ms	16	2.5 MHz	400 ns	26.21 ms
312.5 kHz	3.2 µs	209.7 ms	32	1.25 MHz	800 ns	52.43 ms
156.25 kHz	6.4 µs	419.4 ms	64	625.0 kHz	1.6 µs	104.9 ms
78.125 kHz	12.8 µs	838.9 ms	128	312.5 kHz	3.2 µs	209.7 ms
39.06 kHz	25.6 µs	1.678 s	256	156.25 kHz	6.4 µs	419.4 ms
19.53 kHz	51.2 µs	3.355 s	512	78.125 kHz	12.8 µs	838.9 ms
9.77 kHz	102.4 µs	6.711 s	1024	39.06 kHz	25.6 µs	1.678 s
4.88 kHz	204.8 µs	13.42 s	2048	19.53 kHz	51.2 µs	3.355 s

External Count Clock Input

The external input signals of the GPT2 block are sampled with the GPT2 basic clock (see **Figure 86**). To ensure that a signal is recognized correctly, its current level (high or low) must be held active for at least one complete sampling period, before changing. A signal transition is recognized if two subsequent samples of the input signal represent different levels. Therefore, a minimum of two basic clock periods are required for the sampling of an external input signal. Thus, the maximum frequency of an input signal must not be higher than half the basic clock.

Table 263 summarizes the resulting requirements for external GPT2 input signals.

Table 263 GPT2 External Input Signal Limits

GPT2 Basic Clock = 10 MHz		Input Frequ. Factor	GPT2 Divider BPS2	Input Phase Duration	GPT2 Basic Clock = 40 MHz	
Max. Input Frequency	Min. Level Hold Time				Max. Input Frequency	Min. Level Hold Time
2.5 MHz	200 ns	$f_{GPT}/4$	01_B	$2 \times t_{GPT}$	10.0 MHz	50 ns
1.25 MHz	400 ns	$f_{GPT}/8$	00_B	$4 \times t_{GPT}$	5.0 MHz	100 ns
625.0 kHz	800 ns	$f_{GPT}/16$	11_B	$8 \times t_{GPT}$	2.5 MHz	200 ns
312.5 kHz	1.6 µs	$f_{GPT}/32$	10_B	$16 \times t_{GPT}$	1.25 MHz	400 ns

These limitations are valid for all external input signals to GPT2, including the external count signals in Counter Mode and the gate input signals in Gated Timer Mode.

16.4.7 Interrupt Control for GPT2 Timers and CAPREL

When a timer overflows from $FFFF_H$ to 0000_H (when counting up), or when it underflows from 0000_H to $FFFF_H$ (when counting down), its interrupt request flag in register GPT2_T5 or GPT2_T6I will be set. This will cause an interrupt to the respective timer interrupt vector, if the respective interrupt enable bit is set.

Whenever a transition according to the selection in bit field CI is detected at pin CAPIN, interrupt request flag in register GPT12_CR is set. Setting any request flag will cause an interrupt to the respective timer or CAPREL interrupt vector, if the respective interrupt enable bit is set.

There is an interrupt control register for each of the two timers (T5, T6) and for the CAPREL register. All interrupt control registers have the same structure described in section Interrupt Control.

16.4.8 GPT2 Registers

16.4.8.1 GPT2 Timer Registers

Timer 5 Count Register

GPT12E_T5	Offset	Reset Value
Timer 5 Count Register	$2C_H$	see Table 264

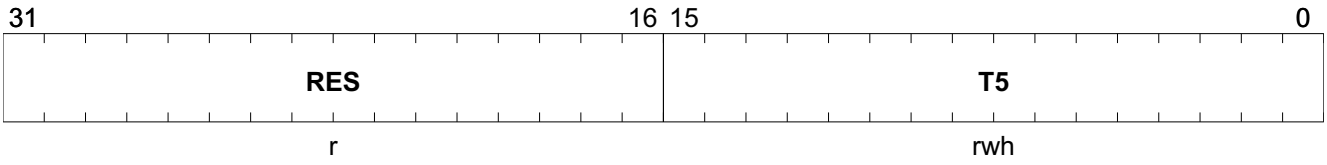

Field	Bits	Type	Description
RES	31:16	r	**Reserved**
T5	15:0	rwh	**Timer T5 Current Value** Contains the current value of the timer T2

Table 264 RESET of GPT12E_T5

Register Reset Type	Reset Values	Reset Short Name	Reset Mode	Note
RESET_TYPE_3	00000000_H	RESET_TYPE_3		

Timer 6 Count Register

GPT12E_T6	Offset	Reset Value
Timer 6 Count Register	30_H	see Table 265

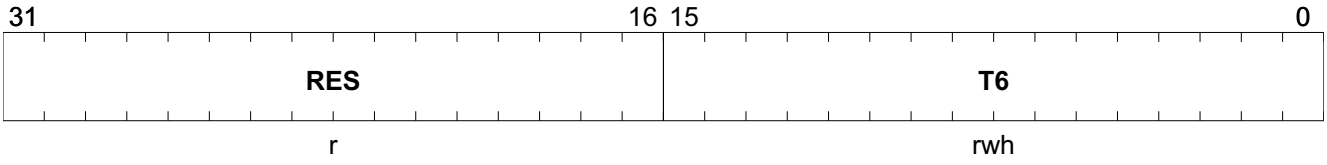

Field	Bits	Type	Description
RES	31:16	r	**Reserved**
T6	15:0	rwh	**Timer T6 Current Value** Contains the current value of the timer T6

Table 265 RESET of GPT12E_T6

Register Reset Type	Reset Values	Reset Short Name	Reset Mode	Note
RESET_TYPE_3	00000000_H	RESET_TYPE_3		

Capture/Reload Register

GPT12E_CAPREL	Offset	Reset Value
Capture/Reload Register	$1C_H$	see Table 266

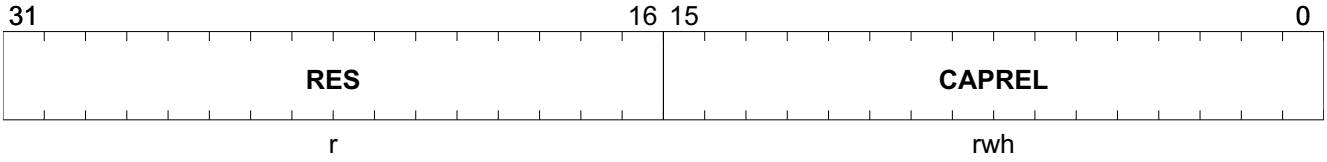

Field	Bits	Type	Description
RES	31:16	r	**Reserved**
CAPREL	15:0	rwh	**Current reload value or Captured value** Contains the current value of the timer CAPREL register

Table 266 RESET of GPT12E_CAPREL

Register Reset Type	Reset Values	Reset Short Name	Reset Mode	Note
RESET_TYPE_3	00000000_H	RESET_TYPE_3		

16.4.8.2 GPT2 Timer Control Registers

GPT2 Core Timer T6 Control Register

GPT12E_T6CON	Offset	Reset Value
Timer T6 Control Register	18_H	see Table 267

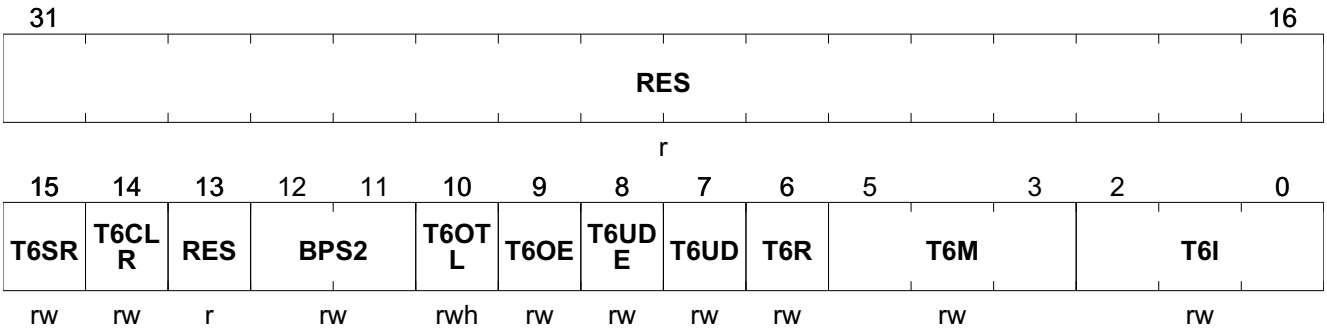

Field	Bits	Type	Description
RES	31:16	r	**Reserved**
T6SR	15	rw	**Timer T6 Reload Mode Enable** 0_B **Disabled** Reload from register CAPREL disabled 1_B **Enabled** Reload from register CAPREL enabled
T6CLR	14	rw	**Timer T6 Clear Enable Bit** 0_B **Not cleared** Timer T6 is not cleared on a capture event 1_B **Cleared** Timer T6 is cleared on a capture event
RES	13	r	**Reserved**
BPS2	12:11	rw	**GPT2 Block Prescaler Control** Select basic clock for block GPT1 (see also **Section 16.4.6**) 00_B **4** f_{GPT}/4 01_B **2** f_{GPT}/2 10_B **16** f_{GPT}/16 11_B **8** f_{GPT}/8
T6OTL	10	rwh	**Timer T6 Overflow Toggle Latch** Toggles on each overflow/underflow of T6. Can be set or cleared by software (see separate description)
T6OE	9	rw	**Overflow/Underflow Output Enable** 0_B **Disabled** Alternate Output Function Disabled 1_B **T6OUT** State of T6 toggle latch is output on pin T6OUT
T6UDE	8	rw	**Timer T6 External Up/Down Enable**[1)] 0_B **T6UD** Count direction is controlled by bit T6UD; input T6EUD is disconnected 1_B **T6EUD** Count direction is controlled by input T6EUD
T6UD	7	rw	**Timer T6 Up/Down Control**[1)] 0_B **Up** Timer T3 counts up 1_B **Down** Timer T3 counts down
T6R	6	rw	**Timer T6 Input Run Bit** 0_B **Stop** Timer T3 stops 1_B **Run** Timer T3 runs
T6M	5:3	rw	**Timer T6 Mode Control** 000_B **Timer Mode** 001_B **Counter Mode** 010_B **Gated low** Gated Timer Mode with gate active low 011_B **Gated high** Gated Timer Mode with gate active high 100_B **Reserved** Do not use this combination 101_B **Reserved** Do not use this combination 110_B **Reserved** Do not use this combination 111_B **Reserved** Do not use this combination
T6I	2:0	rw	**Timer T6 Input Parameter Selection** Depends on the operating mode, see respective sections for encoding: **Table 270** for Timer Mode and Gated Timer Mode **Table 272** for Counter Mode

1) See **Table 269** for encoding of bits T6UD and T6UDE.

Table 267 RESET of GPT12E_T6CON

Register Reset Type	Reset Values	Reset Short Name	Reset Mode	Note
RESET_TYPE_3	00000000_H	RESET_TYPE_3		

GPT2 Auxiliary Timer T5 Control Register

GPT12E_T5CON	Offset	Reset Value
Timer T5 Control Register	14_H	see Table 268

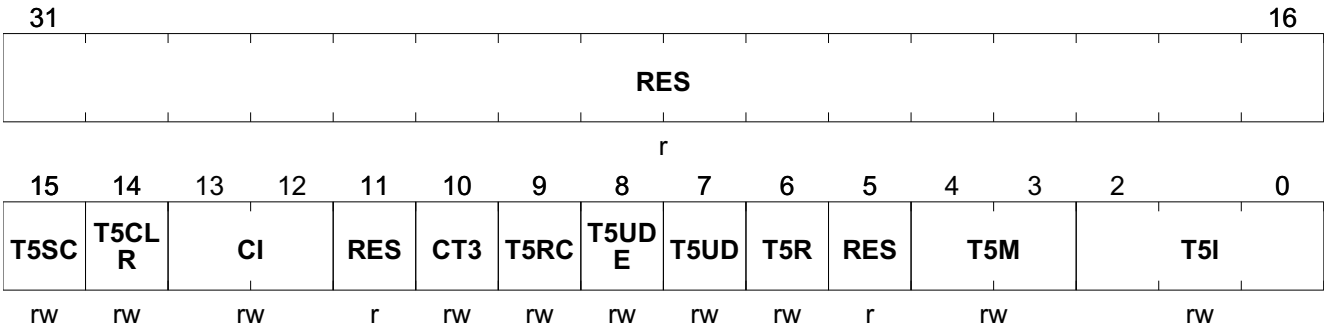

Field	Bits	Type	Description
RES	31:16	r	**Reserved**
T5SC	15	rw	**Timer T5 Capture Mode Enable** 0_B **Disabled** Capture into register CAPREL disabled 1_B **Enabled** Capture into register CAPREL enabled
T5CLR	14	rw	**Timer T5 Clear Enable Bit** 0_B **Not cleared** Timer T5 is not cleared on a capture event 1_B **Cleared** Timer T5 is cleared on a capture event
CI	13:12	rw	**Register CAPREL Capture Trigger Selection**[1)] 00_B **Disabled** Capture disabled 01_B **Positive** Positive transition (rising edge) on CAPIN[2)] or any transition on T3IN 10_B **Negative** Negative transition (falling edge) on CAPIN or any transition on T3EUD 11_B **Any** Any transition (rising or falling edge) on CAPIN or any transition on T3IN or T3EUD
RES	11	r	**Reserved**
CT3	10	rw	**Timer T3 Capture Trigger Enable** 0_B **CAPIN** Capture trigger from input line CAPIN 1_B **T3IN** Capture trigger from T3 input lines T3IN and/or T3EUD
T5RC	9	rw	**Timer T5 Remote Control** 0_B **T5R** Timer T5 is controlled by its own run bit T5R 1_B **T6R** Timer T5 is controlled by the run bit T6R of core timer T6, not by bit T5R

Field	Bits	Type	Description
T5UDE	8	rw	**Timer T5 External Up/Down Enable**[3] 0_B **T5UD** Count direction is controlled by bit T5UD; input T5EUD is disconnected 1_B **T5EUD** Count direction is controlled by input T5EUD
T5UD	7	rw	**Timer T2 Up/Down Control**[3] 0_B **Up** Timer T5 counts up 1_B **Down** Timer T5 counts down
T5R	6	rw	**Timer T5 Run Bit** 0_B **Stop** Timer T5 stops 1_B **Run** Timer T5 runs
RES	5	r	**Reserved** Contains the current value of the CAPREL register
T5M	4:3	rw	**Timer T5 Input Mode Control** 00_B **Timer Mode** 01_B **Counter Mode** 10_B **Gated low** Gated Timer Mode with gate active low 11_B **Gated high** Gated Timer Mode with gate active high
T5I	2:0	rw	**Timer T5 Input Parameter Selection** Depends on the operating mode, see respective sections for encoding: **Table 270** for Timer Mode and Gated Timer Mode **Table 271** for Counter Mode

1) To define the respective trigger source signal, also bit CT3 must be regarded (see **Table 260**).
2) Rising edge must be selected if capturing is triggered by the internal GPT1 read signals (see register PISEL and **"Combined Capture Modes" on Page 479**).
3) See **Table 269** for encoding of bits T5UD and T5UDE.

Table 268 RESET of GPT12E_T5CON

Register Reset Type	Reset Values	Reset Short Name	Reset Mode	Note
RESET_TYPE_3	00000000_H	RESET_TYPE_3		

16.4.8.3 Encoding

Encoding of Timer Count Direction Control

Table 269 GPT2 Timer Count Direction Control

Pin TxEUD	Bit TxUDE	Bit TxUD	Count Direction
X	0	0	Count Up
X	0	1	Count Down
0	1	0	Count Up
1	1	0	Count Down
0	1	1	Count Down
1	1	1	Count Up

Timer Mode and Gated Timer Mode: Encoding of Overall Prescaler Factor

Table 270 GPT2 Overall Prescaler Factors for Internal Count Clock (Timer Mode and Gated Timer Mode)

Individual Prescaler for Tx	Common Prescaler for Module Clock[1)]			
	BPS2 = 01_B	**BPS2 = 00_B**	**BPS2 = 11_B**	**BPS2 = 10_B**
TxI = 000_B	2	4	8	16
TxI = 001_B	4	8	16	32
TxI = 010_B	8	16	32	64
TxI = 011_B	16	32	64	128
TxI = 100_B	32	64	128	256
TxI = 101_B	64	128	256	512
TxI = 110_B	128	256	512	1024
TxI = 111_B	256	512	1024	2048

1) Please note the non-linear encoding of bitfield BPS2.

Counter Mode: Encoding of Input Edge Selection

Table 271 GPT2 Auxiliary Timer T5 Input Edge Selection (Counter Mode)

T5I	Triggering Edge for Counter Increment/Decrement
$X00_B$	None. Counter T5 is disabled
001_B	Positive transition (rising edge) on T5IN
010_B	Negative transition (falling edge) on T5IN
011_B	Any transition (rising or falling edge) on T5IN
101_B	Positive transition (rising edge) of T6 toggle latch T6OTL
110_B	Negative transition (falling edge) of T6 toggle latch T6OTL
111_B	Any transition (rising or falling edge) of T6 toggle latch T6OTL

Table 272 GPT2 Core Timer T6 Input Edge Selection (Counter Mode)

T6I	Triggering Edge for Counter Increment/Decrement
000_B	None. Counter T6 is disabled
001_B	Positive transition (rising edge) on T6IN
010_B	Negative transition (falling edge) on T6IN
011_B	Any transition (rising or falling edge) on T6IN
$1XX_B$	Reserved. Do not use this combination

16.4.8.4 GPT2 Timer and CAPREL Interrupt Control Registers

The Interrupt control register for GPT2 and CAPREL are located in the SCU.

16.5 Miscellaneous GPT12 Registers

The following registers are not assigned to a specific timer block. They control general functions and/or give general information.

Port Input Select Register

Register PISEL selects timer input signal from several sources under software control.

GPT12E_PISEL	Offset	Reset Value
Port Input Select Register	04_H	see Table 273

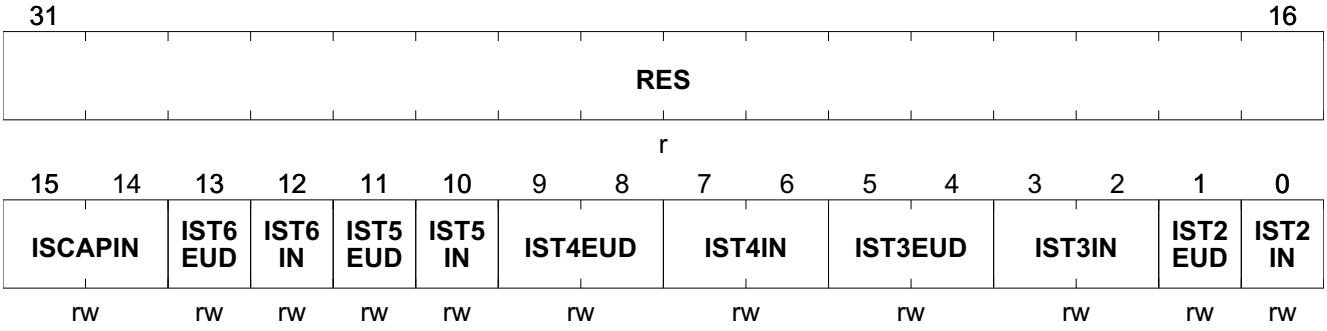

Field	Bits	Type	Description
RES	31:16	r	**Reserved**
ISCAPIN	15:14	rw	**Input Select for CAPIN** 00_B **CAPINA** Signal CAPINA is selected 01_B **CAPINB** Signal CAPINB is selected 10_B **CAPINC** Signal CAPINC (Read trigger from T3) is selected 11_B **CAPIND** Signal CAPIND (Read trigger from T2 or T3 or T4) is selected
IST6EUD	13	rw	**Input Select for T6EUD** 0_B **T6EUDA** Signal T6EUDA is selected 1_B **T6EUDB** Signal T6EUDB is selected
IST6IN	12	rw	**Input Select for T6IN** 0_B **T6INA** Signal T6INA is selected 1_B **T6INB** Signal T6INB is selected
IST5EUD	11	rw	**Input Select for T5EUD** 0_B **T5EUDA** Signal T5EUDA is selected 1_B **T5EUDB** Signal T5EUDB is selected
IST5IN	10	rw	**Input Select for T5IN** 0_B **T5INA** Signal T5INA is selected 1_B **T5INB** Signal T5INB is selected
IST4EUD	9:8	rw	**Input Select for TEUD** 00_B **T4EUDA** Signal T4EUDA is selected 01_B **T4EUDB** Signal T4EUDB is selected 10_B **T4EUDC** Signal T4EUDC is selected 11_B **T4EUDD** Signal T4EUDD is selected

Field	Bits	Type	Description
IST4IN	7:6	rw	**Input Select for T4IN** 00_B **T4INA** Signal T4INA is selected 01_B **T4INB** Signal T4INB is selected 10_B **T4INC** Signal T4INC is selected 11_B **T4IND** Signal T4IND is selected
IST3EUD	5:4	rw	**Input Select for T3EUD** 00_B **T3EUDA** Signal T3EUDA is selected 01_B **T3EUDB** Signal T3EUDB is selected 10_B **T3EUDC** Signal T3EUDC is selected 11_B **T3EUDD** Signal T3EUDD is selected
IST3IN	3:2	rw	**Input Select for T3IN** 00_B **T3INA** Signal T3INA is selected 01_B **T3INB** Signal T3INB is selected 10_B **T3INC** Signal T3INC is selected 11_B **T3IND** Signal T3IND is selected
IST2EUD	1	rw	**Input Select for T2EUD** 0_B **T2EUDA** Signal T2EUDA is selected 1_B **T2EUDB** Signal T2EUDB is selected
IST2IN	0	rw	**Input Select for T2IN** 0_B **T2INA** Signal T2INA is selected 1_B **T2INB** Signal T2INB is selected

Table 273 RESET of GPT12E_PISEL

Register Reset Type	Reset Values	Reset Short Name	Reset Mode	Note
RESET_TYPE_3	00000000_H	RESET_TYPE_3		

Note: PISEL's reset value represents the connections available in previous versions.

Module Identification Register

Register ID indicates the module version.

GPT12E_ID	Offset	Reset Value
Module Identification Register	**00_H**	**see Table 274**

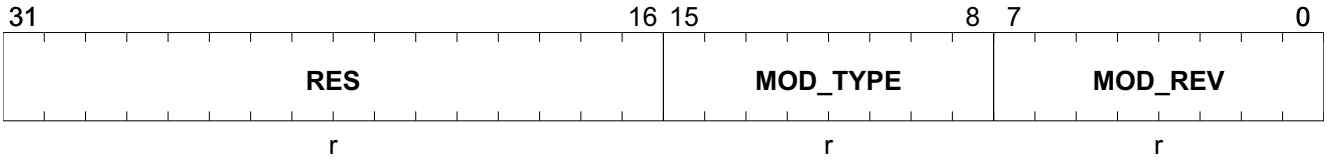

Field	Bits	Type	Description
RES	31:16	r	**Reserved**
MOD_TYPE	15:8	r	**Module Identification Number** This bitfield defines the module identification number (58_H = GPT12E)

Field	Bits	Type	Description
MOD_REV	7:0	r	**Module Revision Number** MOD:_REV defines the revision number. The value of a module revision starts with 01_H (first revision)

Table 274 RESET of GPT12E_ID

Register Reset Type	Reset Values	Reset Short Name	Reset Mode	Note
RESET_TYPE_3	00005804_H	RESET_TYPE_3		

16.6 Implementation of the GPT12 Module

This chapter describes the implementation of the GPT12 module in the TLE984x device.

16.6.1 Module Connections

Besides the described intra-module connections, the timer unit blocks GPT1 and GPT2 are connected to their environment in two basic ways:

- **Internal connections** interface the timers with on-chip resources such as clock generation unit, interrupt controller, or other timers.
  The GPT module is clocked with the TLE984x system clock, so $f_{GPT} = f_{SYS}$.
- **External connections** interface the timers with external resources via port pins.

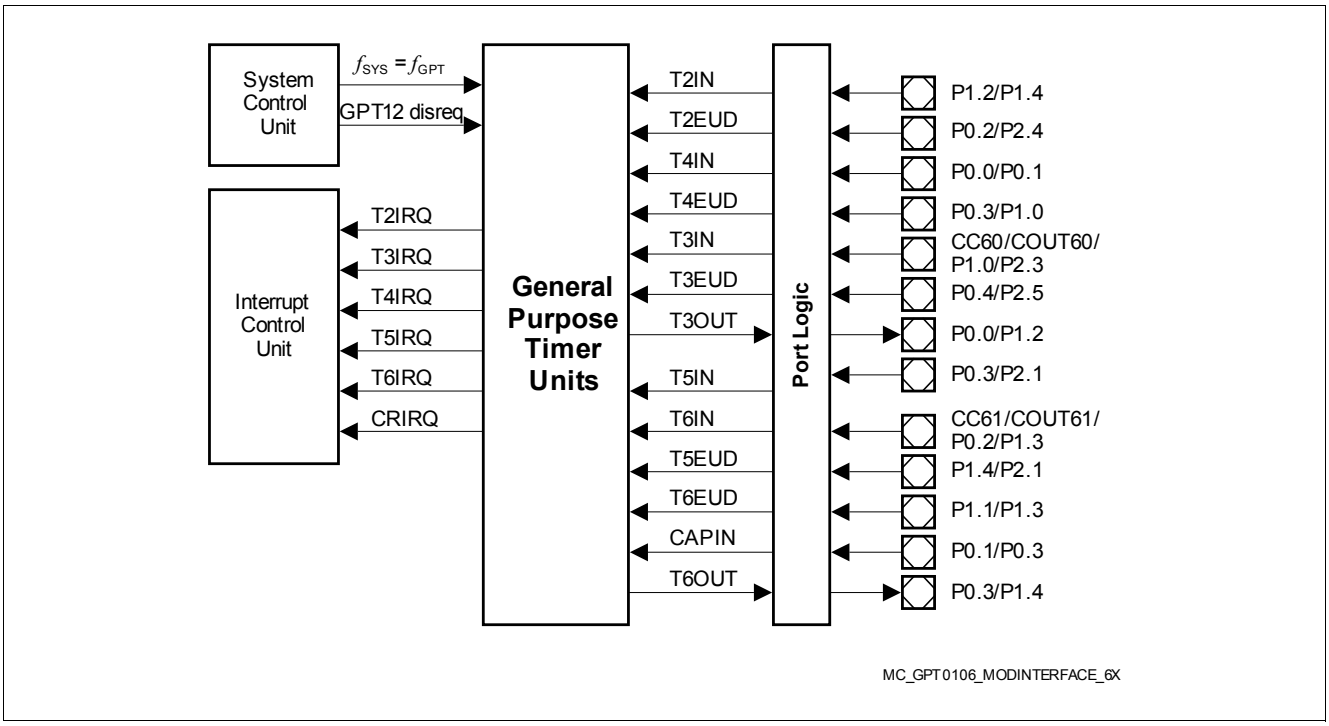

Figure 116 GPT Module Interfaces

Note: The GPT12E output signal 'T6OFL' is connected to the CAPCOM2 input 'TOUF' and to the GSC..

The following table **Table 275** (GPT12) shows the digital connections of the GPT12 module with other modules or pins in the TLE984x device.

Table 275 GPT12 Digital Connections in TLE984x

Signal	from/to Module	I/O to GPT	Can be used to/as
T2INA	P1.2	I	count input signals for timer T2
T2INB	P1.4	I	
T2EUDA	P0.2	I	direction input signals for timer T2
T2EUDB	P2.4	I	
T2IRQ	ICU/SCU	O	interrupt request from timer T2

Table 275 GPT12 Digital Connections in TLE984x (cont'd)

Signal	from/to Module	I/O to GPT	Can be used to/as
T3INA	CC60	I	count input signals for timer T3
T3INB	GPT12PISEL	I	
T3INC	P1.0	I	
T3IND	P2.3	I	
T3EUDA	P0.4	I	direction input signals for timer T3
T3EUDB	P2.5	I	
T3EUDC	P1.1	I	
T3EUDD	P0.3	I	
T3OUT_0, _1	P0.0	O	count output signal for timer T3
	P1.2	O	
T3IRQ	ICU/SCU	O	interrupt request from timer T3
T4INA	P0.0	I	count input signals for timer T4
T4INB	CC60	I	
T4INC	P0.1	I	
T4IND	GPT12PISEL	I	
T4EUDA	P0.3	I	direction input signals for timer T4
T4EUDB	P1.0	I	
T4EUDC	P2.5	I	
T4EUDD	P2.6	I	
T4IRQ	ICU/SCU	O	interrupt request from timer T4
T5INA	P0.5	I	count input signals for timer T5
T5INB	P1.1	I	
T5EUDA	P1.4	I	direction input signals for timer T5
T5EUDB	P2.0	I	
T5IRQ	ICU/SCU	O	interrupt request from timer T5
T6INA	CC61	I	count input signals for timer T6
T6INB	COUT61	I	
T6EUDA	P1.1	I	direction input signals for timer T6
T6EUDB	P2.2	I	
T6OUT_1, _0	P0.3	O	count output signal for timer T6
	P0.1	O	
T6IRQ	ICU/SCU	O	interrupt request from timer T6
T6OFL	P0.3	O	over/under-flow signal from timer T6
CAPINA	P0.1	I	input capture signals
CAPINB	P0.3	I	
CAPINC	read trigger from T3	I	
CAPIND	read trigger from T2 or T3 or T4	I	
CRIRQ	ICU/SCU	O	interrupt request from capture control

Port Control

Port pins to be used for timer input signals must be switched to input (bitfield PC in the respective port control register must be $0xxx_B$) and must be selected via register PISEL.

Port pins to be used for timer output signals must be switched to output and the alternate timer output signal must be selected (bitfield PC in the respective port control register must be $1xxx_B$).

Note: For a description of the port control registers, please refer to chapter “Parallel Ports”.

Interrupts

The 12 has six interrupt request lines.

Interrupt nodes to be used for timer interrupt requests must be enabled and programmed to a specific interrupt level.

Debug Details

While the module GPT is disabled, its registers can still be read. While disabled the following registers can be written: PISEL, T5CON.

17 Timer2 and Timer21

This chapter describes the Timer2 and Timer21. Each timer is a 16-bit timer which additionally can function as a counter. Each Timer 2 module also provides a single channel 16-bit capture.

17.1 Features

- 16-bit auto-reload mode
  – selectable up or down counting
- One channel 16-bit capture mode
- Baud-rate generator for U(S)ART

17.2 Introduction

Two functionally identical timers are implemented: Timer 2 and 21. The description refers to Timer 2 only, but applies to Timer 21 as well.

The timer modules are general purpose 16-bit timer. Timer 2 can function as a timer or counter in each of its modes. As a timer, it counts with an input clock of f_{sys}/12 (if prescaler is disabled). As a counter, Timer 2 counts 1-to-0 transitions on pin T2. In the counter mode, the maximum resolution for the count is f_{sys}/24 (if prescaler is disabled).

Note: “Timer 2” is generally referred in the following description which is applicable to each of the Timer2 and Timer21.

17.2.1 Timer2 and Timer21 Modes Overview

Table 276 Port Registers

Mode	Description
Auto-reload	**Up/Down Count Disabled** • Count up only • Start counting from 16-Bit reload value, overflow at $FFFF_H$ • Reload event configurable for trigger by overflow condition only, or by negative/positive edge at input pin T2EX as well • Programmable reload value in register RC2 • Interrupt is generated with reload events.

Table 276 Port Registers (cont'd)

Mode	Description
Auto-reload	**Up/Down Count Enabled** • Count up or down, direction determined by level at input pin T2EX • No interrupt is generated • Count up – Start counting from 16-Bit reload value, overflow at $FFFF_H$ – Reload event triggered by overflow condition – Programmable reload value in register RC2 • Count down – Start counting from $FFFF_H$, underflow at value defined in register RC2 – Reload event triggered by underflow condition – Reload value fixed at $FFFF_H$
Channel capture	• Count up only • Start counting from 0000_H, overflow at $FFFF_H$ • Reload event triggered by overflow condition • Reload value fixed at 0000_H • Capture event triggered by falling/rising edge at pin T2EX • Captured timer value stored in register RC2 • Interrupt is generate with reload or capture event

Timer 2 can be started by using TR2 bit by hardware or software. Timer 2 can be started by setting TR2 bit by software. If bit T2RHEN is set, Timer 2 can be started by hardware. Bit T2REGS defines the event on pin T2EX: falling edge or rising edge, that can set the run bit TR2 by hardware. Timer 2 can only be stopped by resetting TR2 bit by software.

17.3 Functional Description

17.3.1 Auto-Reload Mode

The auto-reload mode is selected when the bit CP_RL2 in register T2CON is zero. In the auto-reload mode, Timer 2 counts to an overflow value and then reloads its register contents with a 16-bit start value for a fresh counting sequence. The overflow condition is indicated by setting bit TF2 in the T2CON register. This will then generate an interrupt request to the core. The overflow flag TF2 must be cleared by software.

The auto-reload mode is further classified into two categories depending upon the DCEN control bit.

17.3.1.1 Up/Down Count Disabled

If DCEN = 0, the up-down count selection is disabled. The timer, therefore, functions as a pure up counter/timer only. The operational block diagram is shown in **Figure 117**.

In this mode, if EXEN2 = 0, the timer starts to count up to a maximum of $FFFF_H$, once TR2 is set. Upon overflow, bit TF2 is set and the timer register is reloaded with the 16-bit reload value of the RC2 register. This reload value is chosen by software, prior to the occurrence of an overflow condition. A fresh count sequence is started and the timer counts up from this reload value as in the previous count sequence.

If EXEN2 = 1, the timer counts up to a maximum of $FFFF_H$ once TR2 is set. A 16-bit reload of the timer registers from register RC2 is triggered either by an overflow condition or by a negative/positive edge (chosen by T2MOD.EDGESEL) at input pin T2EX. If an overflow caused the reload, the overflow flag TF2 is set. If a negative/positive transition at pin T2EX caused the reload, bit EXF2 is set. In either case, an interrupt is generated

to the core and the timer proceeds to its next count sequence. The EXF2 flag, similar to the TF2, must be cleared by software.

If bit T2RHEN is set, Timer 2 is started by first falling edge/rising edge at pin T2EX, which is defined by bit T2REGS. If bit EXEN2 is set, bit EXF2 is also set at the same point when Timer2 is started with the same falling edge/rising edge at pin T2EX, which is defined by bit EDGESEL. The reload will happen with the following negative/positive transitions at pin T2EX, which is defined by bit EDGESEL.

Note: In counter mode, if the reload via T2EX and the count clock T2 are detected simultaneously, the reload takes precedence over the count. The counter increments its value with the following T2 count clock.

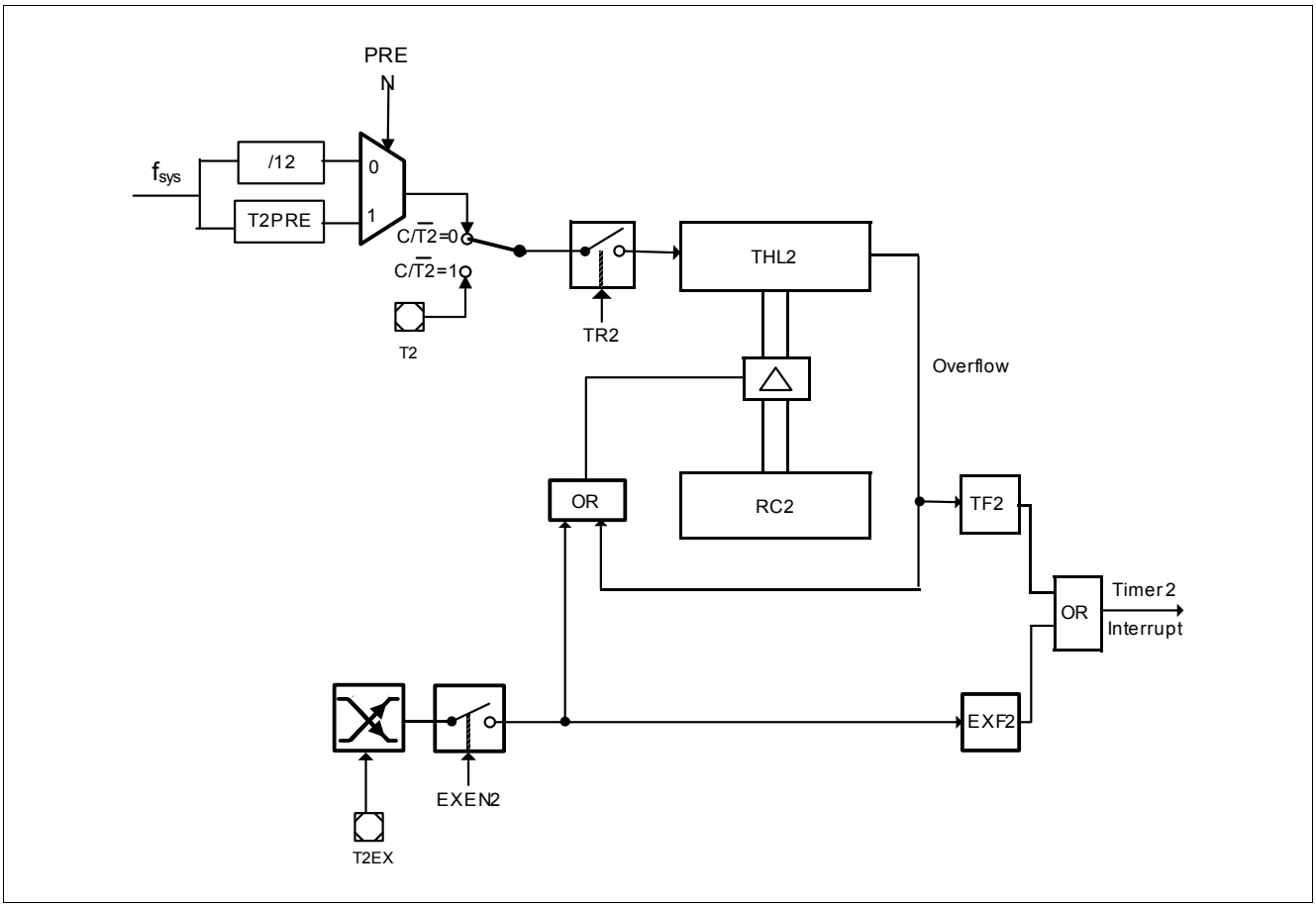

Figure 117 Auto-Reload Mode (DCEN = 0)

17.3.1.2 Up/Down Count Enabled

If DCEN = 1, the up-down count selection is enabled. The direction of count is determined by the level at input pin T2EX. The operational block diagram is shown in **Figure 118**.

A logic 1 at pin T2EX sets the Timer 2 to up counting mode. The timer, therefore, counts up to a maximum of $FFFF_H$. Upon overflow, bit TF2 is set and the timer register is reloaded with a 16-bit reload value of the RC2 register. A fresh count sequence is started and the timer counts up from this reload value as in the previous count sequence. This reload value is chosen by software, prior to the occurrence of an overflow condition.

A logic 0 at pin T2EX sets the Timer 2 to down counting mode. The timer counts down and underflows when the THL2 value reaches the value stored at register RC2. The underflow condition sets the TF2 flag and causes $FFFF_H$ to be reloaded into the THL2 register. A fresh down counting sequence is started and the timer counts down as in the previous counting sequence.

If bit T2RHEN is set, Timer 2 can only be started either by rising edge (T2REGS = 1) at pin T2EX and then do the up counting, or be started by falling edge (T2REGS = 0) at pin T2EX and then do the down counting.

In this mode, bit EXF2 toggles whenever an overflow or an underflow condition is detected. This flag, however, does not generate an interrupt request.

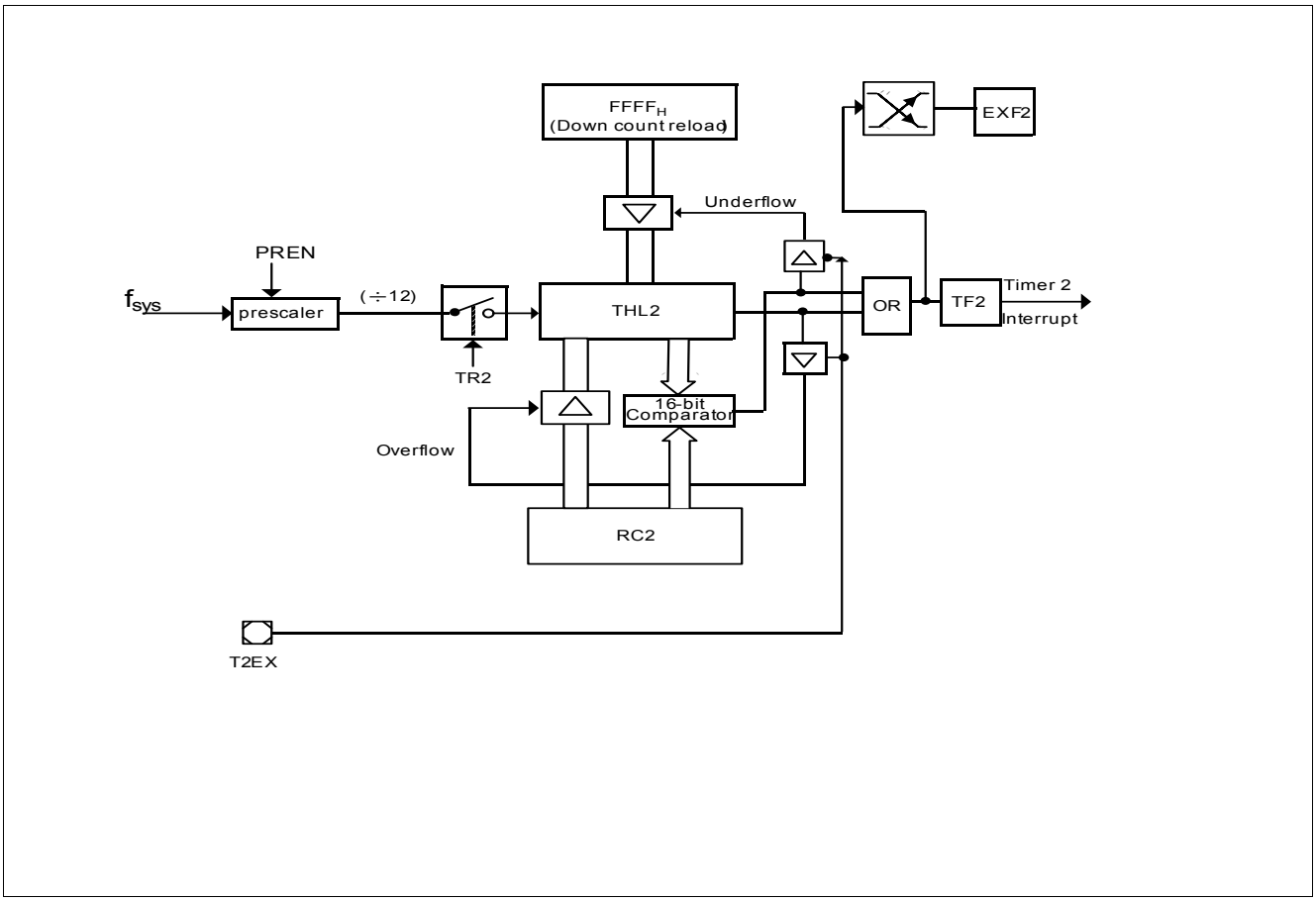

Figure 118 Auto-Reload Mode (DCEN = 1)

17.3.2 Capture Mode

In order to enter the 16-bit capture mode, bits CP_RL2 and EXEN2 in register T2CON must be set. In this mode, the down count function must remain disabled. The timer functions as a 16-bit timer or counter and always counts up to $FFFF_H$ and overflows. Upon an overflow condition, bit TF2 is set and the timer reloads its registers with 0000_H. The setting of TF2 generates an interrupt request to the core.

Additionally, with a falling/rising edge on pin T2EX (chosen by T2MOD.EDGESEL) the contents of the timer register (THL2) are captured into the RC2 register. The external input is sampled in every f_{sys} cycle. When a sampled input shows a low (high) level in one f_{sys} cycle and a high (low) in the next f_{sys} cycle, a transition is recognized. If the capture signal is detected while the counter is being incremented, the counter is first incremented before the capture operation is performed. This ensures that the latest value of the timer register is always captured.

If bit T2RHEN is set, Timer 2 is started by first falling edge/rising edge at pin T2EX, which is defined by bit T2REGS. If bit EXEN2 is set, bit EXF2 is also set at the same point when Timer2 is started with the same falling edge/rising edge at pin T2EX, which is defined by bit EDGESEL. The capture will happen with the following negative/positive transitions at pin T2EX, which is defined by bit EDGESEL.

When the capture operation is completed, bit EXF2 is set and can be used to generate an interrupt request. **Figure 119** describes the capture function of Timer 2.

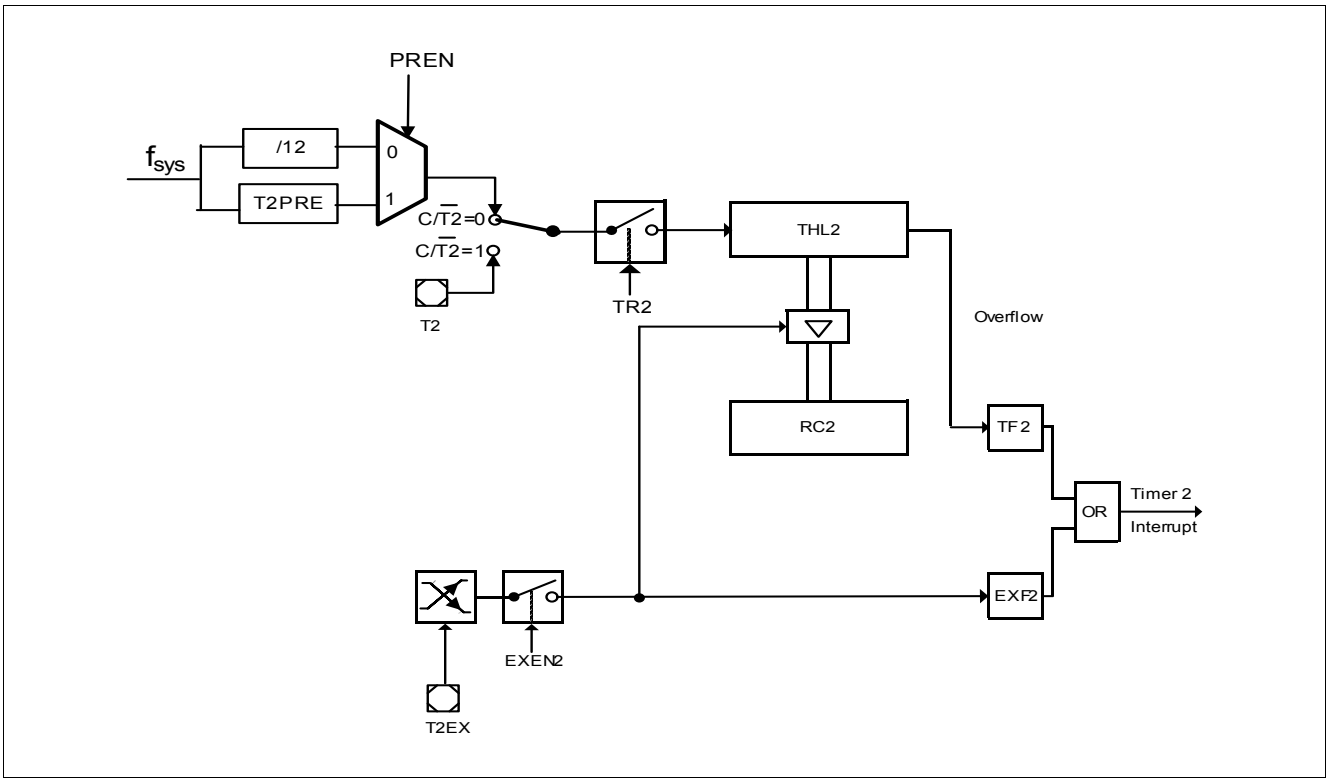

Figure 119 Capture Mode

17.3.3 Count Clock

The count clock for the auto-reload mode is chosen by the bit C_T2 in register T2CON. If C_T2 = 0, a count clock of $f_{sys}/12$ (if prescaler is disabled) is used for the count operation.

If C_T2 = 1, Timer 2 behaves as a counter that counts 1-to-0 transitions of input pin T2. The counter samples pin T2 over 2 f_{sys} cycles. If a 1 was detected during the first clock and a 0 was detected in the following clock, then the counter increments by one. Therefore, the input levels should be stable for at least 1 clock.

If bit T2RHEN is set, Timer 2 can be started by the falling edge/rising edge on pin T2EX, which is defined by bit T2REGS.

Note: If pin T2 is not connected, counting clock function on pin T2 cannot be used.

17.3.4 Interrupt Generation

When an interrupt event happened, the corresponding interrupt flag bit EXF2/TF2 is set. If enabled by the related interrupt enable bit EXF2EN/TF2EN in register T2CON1, an interrupt for the interrupt event EXF2/TF2 will be generated.

Note: When the timer/counter is stopped and while the module remains enabled, it is possible for an external event at T2EX to generate an interrupt. For this to occur, bit EXEN2 in SFR T2CON must be set. In this case, a dummy reload or capture happens depending on the CP_RL2 bit selection. The resulting interrupt could therefore be used in the product as an external falling/rising edge triggered interrupt.

17.4 Timer 2 Register Definition

All Timer 2 and Timer 21 register names described in the following sections will be referenced in other chapters with the module name prefix “T2_” and “T21_”, respectively.

Table 277 Register Address Space

Module	Base Address	End Address	Note
T2	48004000_H	$48004FFF_H$	Timer2
T21	48005000_H	$48005FFF_H$	Timer21

Table 278 Register Overview

Register Short Name	Register Long Name	Offset Address	Reset Value
Timer 2 Register Definition, Mode Register			
T2_MOD	Timer 2 Mode Register	04_H	**see Table 279**
Timer 2 Register Definition, Control Register			
T2_CON	Timer 2 Control Register	00_H	**see Table 280**
T2_CON1	Timer 2 Control Register 1	$1C_H$	**see Table 282**
T2_ICLR	Timer 2 Interrupt Clear Register	18_H	**see Table 281**
Timer 2 Register Definition, Timer 2 Reload/Capture Register			
T2_RC	Timer 2 Reload/Capture Register	08_H	**see Table 283**
Timer 2 Register Definition, Timer 2 Count Register			
T2_CNT	Timer 2 Count Register	10_H	**see Table 284**

The registers are addressed wordwise.

17.4.1 Mode Register

The T2MOD is used to configure Timer 2 for various modes of operation.

Timer 2 Mode Register

T2_MOD	Offset	Reset Value
Timer 2 Mode Register	04_H	see Table 279

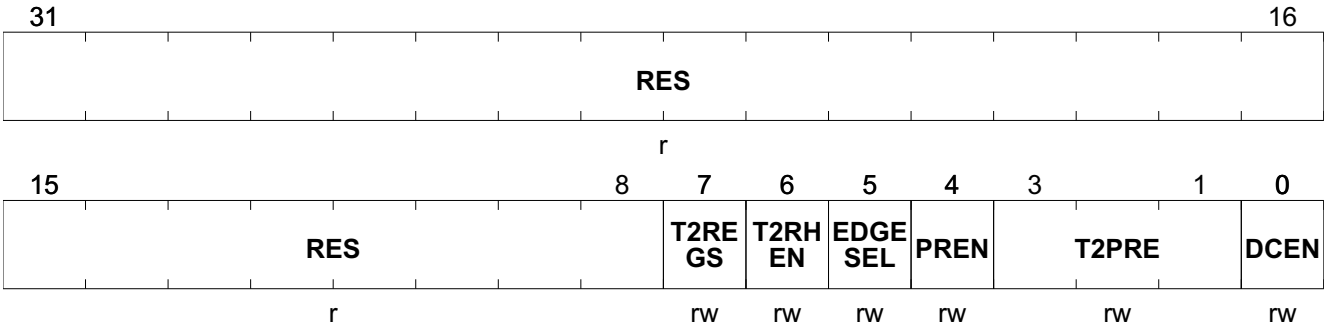

Field	Bits	Type	Description
RES	31:8	r	**Reserved** Returns 0 if read; should be written with 0.
T2REGS	7	rw	**Edge Select for Timer 2 External Start** 0_B **FALLING** The falling edge at Pin T2EX is selected. 1_B **RISING** The rising edge at Pin T2EX is selected.
T2RHEN	6	rw	**Timer 2 External Start Enable** 0_B **DISABLED** Timer 2 External Start is disabled. 1_B **ENABLED** Timer 2 External Start is enabled.
EDGESEL	5	rw	**Edge Select in Capture Mode/Reload Mode** 0_B **FALLING** The falling edge at Pin T2EX is selected. 1_B **RISING** The rising edge at Pin T2EX is selected.
PREN	4	rw	**Prescaler Enable** 0_B **DISABLED** Prescaler is disabled and the 2 or 12 divider takes effect. 1_B **ENABLED** Prescaler is enabled (see T2PRE bit) and the 2 or 12 divider is bypassed.
T2PRE	3:1	rw	**Timer 2 Prescaler Bit** Selects the input clock for Timer 2 which is derived from the peripheral clock. 000_B **DIV1** $f_{T2} = f_{sys}$ 001_B **DIV2** $f_{T2} = f_{sys} / 2$ 010_B **DIV4** D$f_{T2} = f_{sys} / 4$ 011_B **DIV8** $f_{T2} = f_{sys} / 8$ 100_B **DIV16** $f_{T2} = f_{sys} / 16$ 101_B **DIV32** $f_{T2} = f_{sys} / 32$ 110_B **DIV64** $f_{T2} = f_{sys} / 64$ 111_B **DIV128** $f_{T2} = f_{sys} / 128$
DCEN	0	rw	**Up/Down Counter Enable** 0_B **DISABLED** Up/Down Counter function is disabled 1_B **ENABLED** Up/Down Counter function is enabled and controlled by pin T2EX (Up = 1, Down = 0)

Table 279 Reset of T2_MOD

Register Reset Type	Reset Values	Reset Short Name	Reset Mode	Note
RESET_TYPE_3	00000000_H	RESET_TYPE_3		

17.4.2 Control Register

Control register is used to control the operating modes and interrupt of Timer 2.

Timer 2 Control Register

T2_CON	Offset	Reset Value
Timer 2 Control Register	00_H	see Table 280

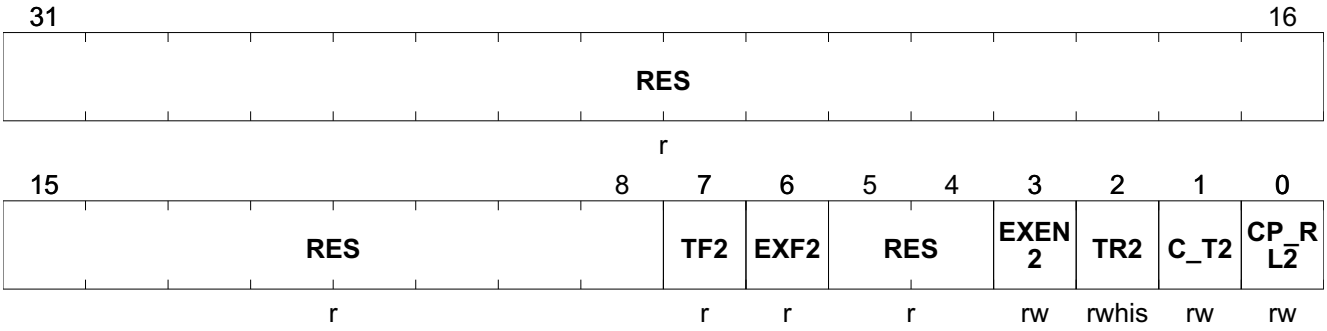

Field	Bits	Type	Description
RES	31:8	r	**Reserved** Returns 0 if read; should be written with 0.
TF2	7	r	**Timer 2 Overflow/Underflow Flag** Set by a Timer 2 overflow/underflow. Must be cleared by software.
EXF2	6	r	**Timer 2 External Flag** In Capture/Reload Mode, this bit is set by hardware when a negative/positive transition occurs at pin T2EX, if bit EXEN2 = 1. This bit must be cleared by software. *Note: When bit DCEN = 1 in auto-reload mode, no interrupt request to the core is generated.*
RES	5:4	r	**Reserved** Returns 0 if read; should be written with 0.
EXEN2	3	rw	**Timer 2 External Enable Control** 0_B **DISABLED** External events are disabled. 1_B **ENABLED** External events are enabled in Capture/Reload Mode.
TR2	2	rwhis	**Timer 2 Start/Stop Control** 0_B **STOP** Timer 2. 1_B **START** Timer 2.
C_T2	1	rw	**Timer or Counter Select** 0_B **Timer** function selected. 1_B **Count** upon negative edge at pin T2.

Field	Bits	Type	Description
CP_RL2	0	rw	**Capture/Reload Select** 0_B **Reload** upon overflow or upon negative/positive transition at pin T2EX (when EXEN2 = 1). 1_B **Capture** Timer 2 data register contents on the negative/positive transition at pin T2EX, provided EXEN2 = 1.The negative or positive transition at Pin T2EX is selected by bit EDGESEL.

Table 280 Reset of T2_CON

Register Reset Type	Reset Values	Reset Short Name	Reset Mode	Note
RESET_TYPE_3	00000000_H	RESET_TYPE_3		

Timer 2 Interrupt Clear Register

T2_ICLR	Offset	Reset Value
Timer 2 Interrupt Clear Register	18_H	see Table 281

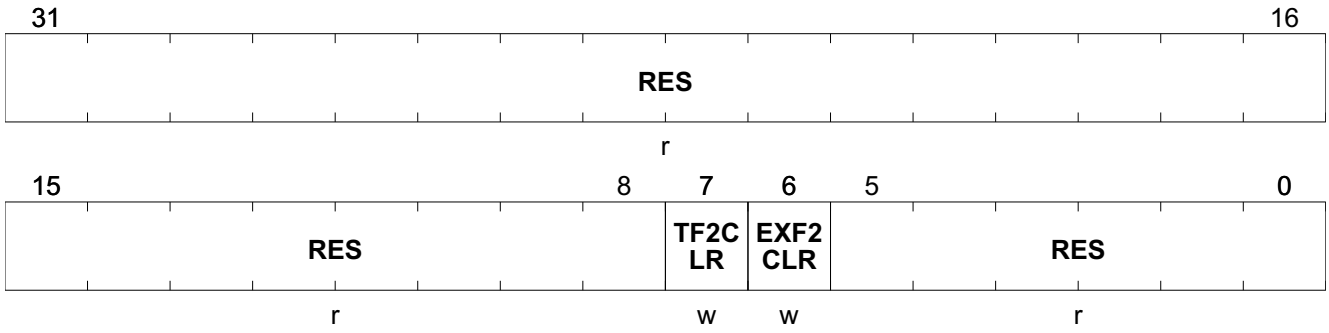

Field	Bits	Type	Description
RES	31:8	r	**Reserved** Always read as 0
TF2CLR	7	w	**Overflow/Underflow Interrupt Clear Flag** 0_B **N/A** Overflow/underflow interrupt is not cleared. 1_B **Clear** Overflow/underflow interrupt
EXF2CLR	6	w	**External Interrupt Clear Flag** 0_B **N/A** External interrupt is not cleared. 1_B **Clear** External interrupt
RES	5:0	r	**Reserved** Always read as 0

Table 281 Reset of T2_ICLR

Register Reset Type	Reset Values	Reset Short Name	Reset Mode	Note
RESET_TYPE_3	00000000_H	RESET_TYPE_3		

Timer 2 Control Register 1

T2_CON1	Offset	Reset Value
Timer 2 Control Register 1	$1C_H$	see Table 282

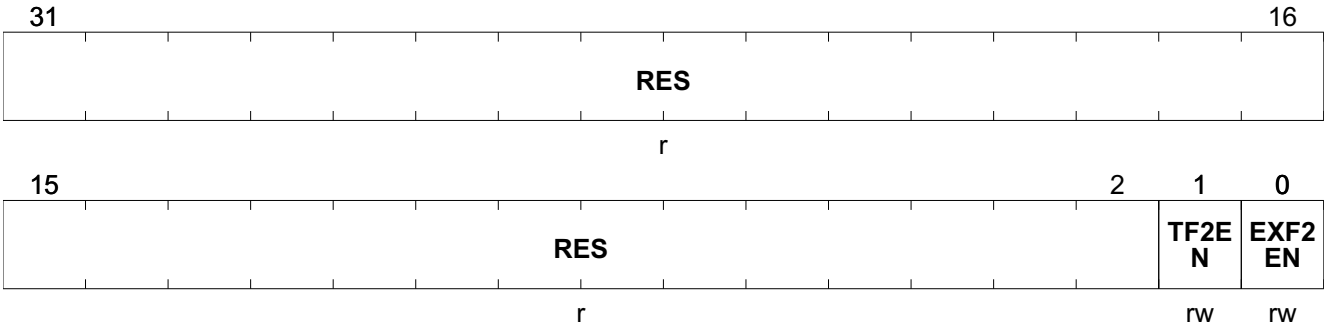

Field	Bits	Type	Description
RES	31:2	r	**Reserved** Always read as 0
TF2EN	1	rw	**Overflow/Underflow Interrupt Enable** 0_B **DISABLE** Overflow/underflow interrupt. 1_B **ENABLE** Overflow/underflow interrupt.
EXF2EN	0	rw	**External Interrupt Enable** 0_B **DISABLE** External interrupt. 1_B **ENABLE** External interrupt

Table 282 Reset of T2_CON1

Register Reset Type	Reset Values	Reset Short Name	Reset Mode	Note
RESET_TYPE_3	00000003_H	RESET_TYPE_3		

17.4.3 Timer 2 Reload/Capture Register

The RC2 register is used for a 16-bit reload of the timer count upon an overflow or a capture of the current timer count depending on the mode selected.

Timer 2 Reload/Capture Register, Low Byte

T2_RC	Offset	Reset Value
Timer 2 Reload/Capture Register	08_H	see Table 283

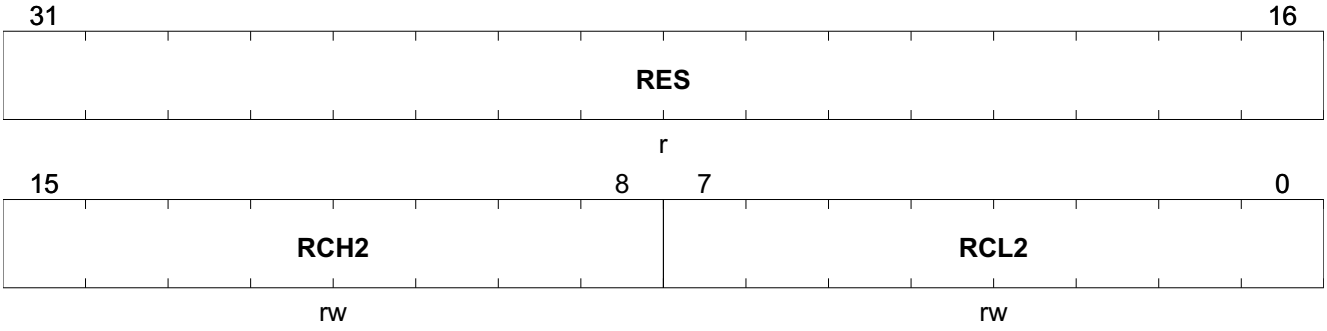

Field	Bits	Type	Description
RES	31:16	r	**Reserved** Always read as 0
RCH2	15:8	rw	**Reload/Capture Value** Note: Reload/Capture Value can be set by software (highest priority) and is updated by hardware during capture mode. These contents are loaded into the timer register upon an overflow condition, if CP_RL2 = 0.If CP_RL2 = 1, this register is loaded with the current timer count upon a negative/positive transition at pin T2EX when EXEN2 = 1.
RCL2	7:0	rw	**Reload/Capture Value** Note: Reload/Capture Value can be set by software (highest priority) and is updated by hardware during capture mode. These contents are loaded into the timer register upon an overflow condition, if CP_RL2 = 0.If CP_RL2 = 1, this register is loaded with the current timer count upon a negative/positive transition at pin T2EX when EXEN2 = 1.

Table 283 Reset of T2_RC

Register Reset Type	Reset Values	Reset Short Name	Reset Mode	Note
RESET_TYPE_3	00000000_H	RESET_TYPE_3		

17.4.4 Timer 2 Count Register

The T2_CNT register holds the current 16-bit value of the Timer 2 count.

Timer 2 Register

T2_CNT	Offset	Reset Value
Timer 2 Count Register	10_H	see Table 284

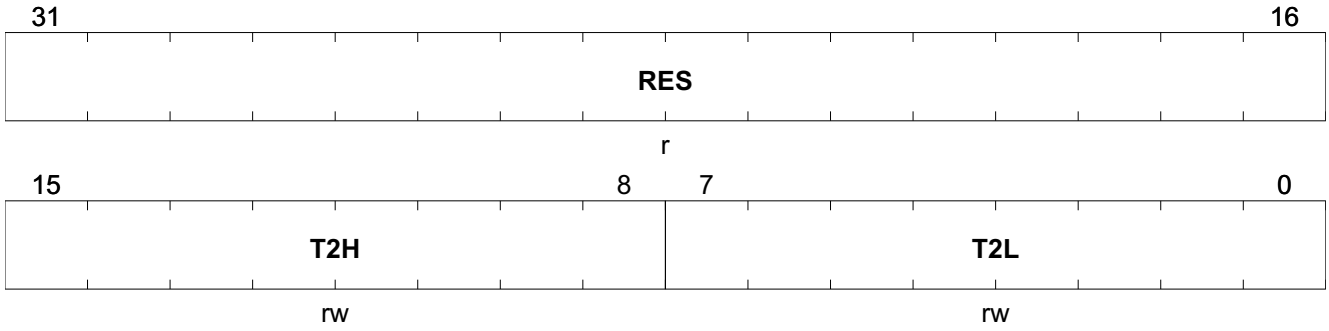

Field	Bits	Type	Description
RES	31:16	r	**Reserved** Always read as 0
T2H	15:8	rw	**Timer 2 Value** These bits indicate the current timer value T2[15:8]. Note: Timer 2 can be updated by software (highest priority) and is updated by hardware if T2R is set
T2L	7:0	rw	**Timer 2 Value** These bits indicate the current timer value T2[7:0]. Note: Timer 2 can be updated by software (highest priority) and is updated by hardware if T2R is set

Table 284 Reset of T2_CNT

Register Reset Type	Reset Values	Reset Short Name	Reset Mode	Note
RESET_TYPE_3	00000000_H	RESET_TYPE_3		

17.5 Timer2 and Timer21 Implementation Details

This section describes:

- the TLE984xQX module related interfaces such as port connections and interrupt control
- all TLE984xQX module related registers with their addresses

17.5.1 Interfaces of the Timer2 and Timer21

Overviews of the Timer2 and Timer21 kernel I/O interfaces and interrupt signals are shown in **Figure 120** and **Figure 121**.

Timer2 and Timer21 can be suspended when Debug Mode enters Monitor Mode and has the Debug Suspend signal activated, provided the timer suspend bits, T2SUSP and T21SUSP (in SCU SFR MODSUSP) are set. Refer to SCU chapter.

The interrupt request of the Timer2 and Timer21 is not connected directly to the CPU's Interrupt Controller, but via the System Control Unit (SCU). The General Purpose IO (GPIO) Port provides the interface from the Timer2 and Timer21 to the external world.

The external trigger and counter inputs of the two Timer 2 modules can be selected from several different sources. This selection is performed by the SCU via the corresponding input control and select bits in SFR MODPISEL1 and MODPISEL2.

In the TLE984xQX, Timer2 and Timer21 allow additionally to trigger ADC1 conversions through the t2(1)_adc_trigger signals. These trigger signals are generated while the timer is working in timer mode (C_T2 = 0).

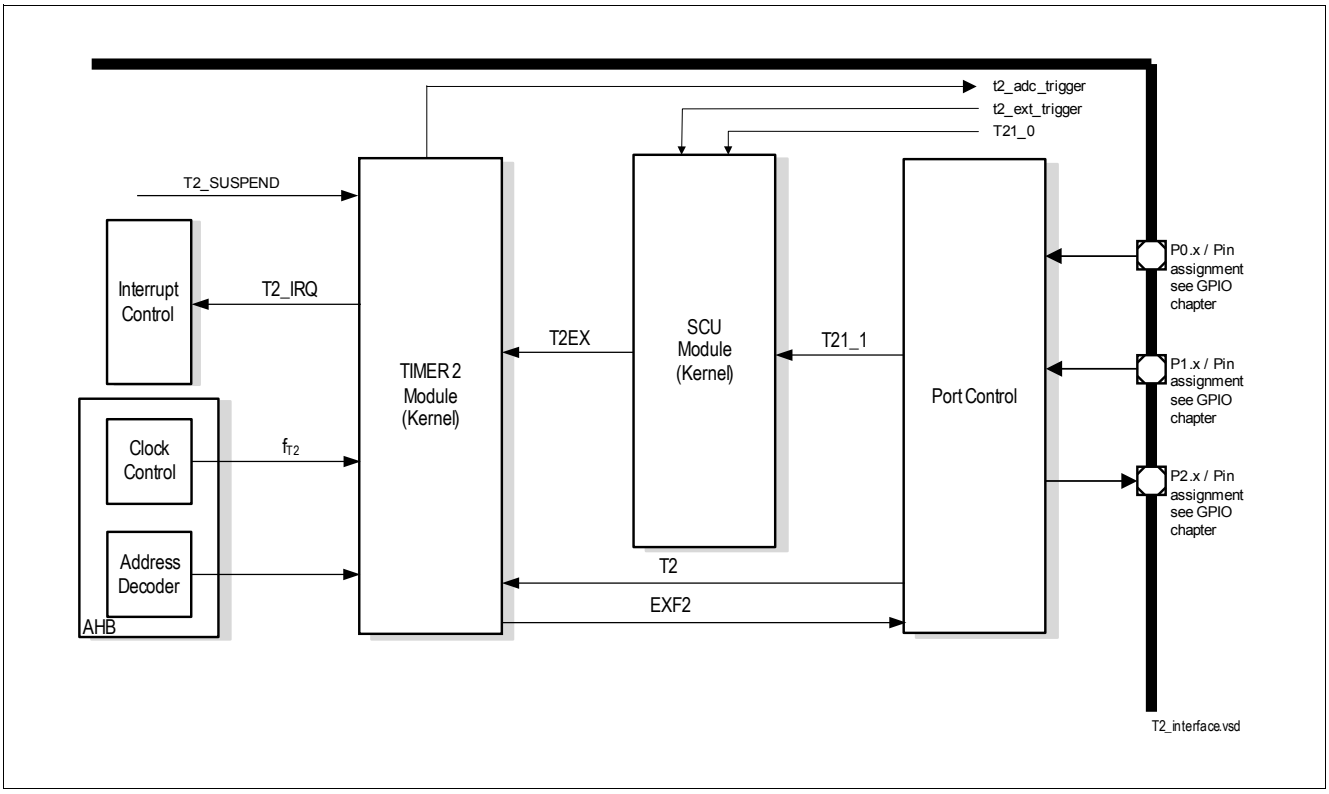

Figure 120 Timer 2 Module I/O Interface

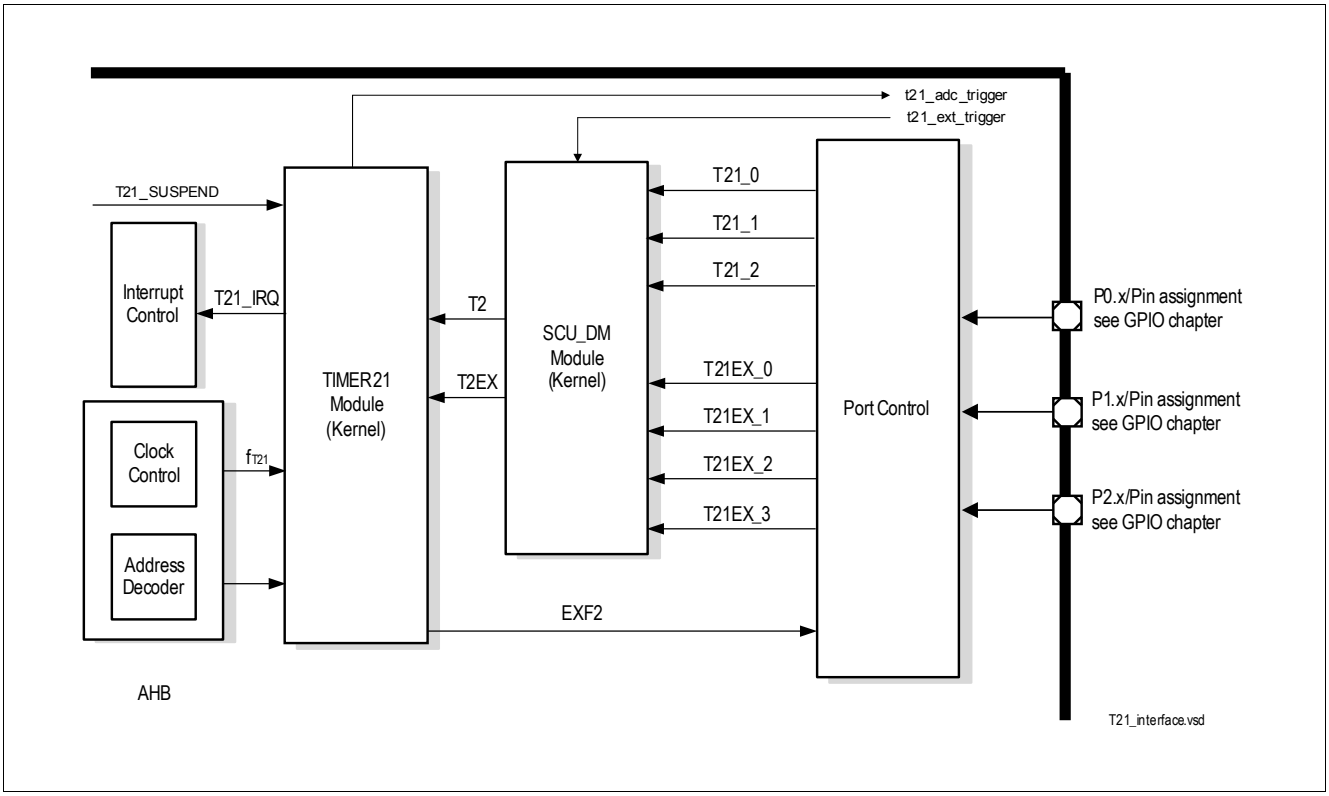

Figure 121 Timer 21 Module I/O Interface

18 Capture/Compare Unit 6 (CCU6)

This chapter is structured as follows:

- Functional description of the CCU6 kernel (see **Section 18.2**)
  - Introduction (see **Section 18.2**)
  - Operating T12 (see **Section 18.3**)
  - Operating T13 (see **Section 18.4**)
  - Trap handling (see **Section 18.5**)
  - Multi-Channel mode (see **Section 18.6**)
  - Hall sensor mode (see **Section 18.7**)
  - Interrupt handling (see **Section 18.8**)
  - General module operation (see **Section 18.9**)
- CCU6 kernel registers description (see **Section 18.10**)
- TLE984xQX implementation specific details (see **Section 18.11**)

18.1 Feature Set Overview

This section gives an overview over the different building blocks and their main features.

Timer 12 Block Features

- Three capture/compare channels, each channel can be used either as capture or as compare channel
- Generation of a three-phase PWM supported (six outputs, individual signals for High Side and low-side switches)
- 16-bit resolution, maximum count frequency = peripheral clock
- Dead-time control for each channel to avoid short-circuits in the power stage
- Concurrent update of T12 registers
- Center-aligned and edge-aligned PWM can be generated
- Single-shot mode supported
- Start can be controlled by external events
- Capability of counting external events
- Multiple interrupt request sources
- Hysteresis-like control mode

Timer 13 Block Features

- One independent compare channel with one output
- 16-bit resolution, maximum count frequency = peripheral clock
- Concurrent update of T13 registers
- Can be synchronized to T12
- Interrupt generation at period-match and compare-match
- Single-shot mode supported
- Start can be controlled by external events
- Capability of counting external events

Additional Specific Functions

- Block commutation for Brushless DC-drives implemented
- Position detection via Hall-sensor pattern
- Noise filter supported for position input signals
- Automatic rotational speed measurement and commutation control for block commutation
- Integrated error handling
- Fast emergency stop without CPU load via external signal ($\overline{\text{CTRAP}}$)

- Control modes for multi-channel AC-drives
- Output levels can be selected and adapted to the power stage

18.2 Introduction

The CCU6 unit is made up of a Timer T12 Block with three capture/compare channels and a Timer T13 Block with one compare channel. The T12 channels can independently generate PWM signals or accept capture triggers, or they can jointly generate control signal patterns to drive AC-motors or inverters.

A rich set of status bits, synchronized updating of parameter values via shadow registers, and flexible generation of interrupt request signals provide means for efficient software-control.

Note: The capture/compare module itself is named CCU6 (capture/compare unit 6). A capture/compare channel inside this module is named CC6x.

18.2.1 Block Diagram

The Timer T12 can work in capture and/or compare mode for its three channels. The modes can also be combined (e.g. a channel works in compare mode, whereas another channel works in capture mode). The Timer T13 can work in compare mode only. The multi-channel control unit generates output patterns which can be modulated by T12 and/or T13. The modulation sources can be selected and combined for the signal modulation.

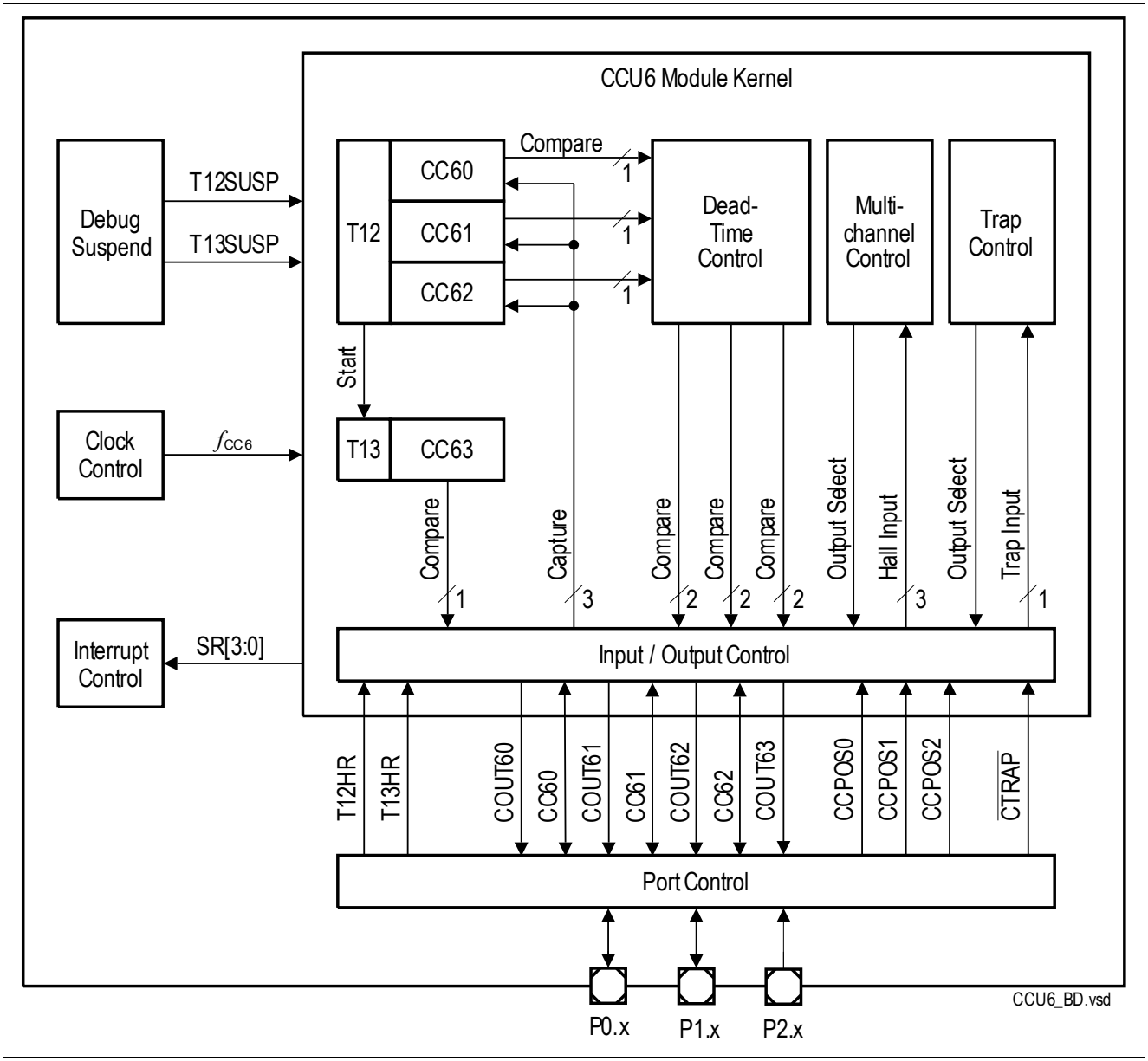

Figure 122 CCU6 Block Diagram

18.3 Operating Timer T12

The timer T12 block is the main unit to generate the 3-phase PWM signals. A 16-bit counter is connected to 3 channel registers via comparators, which generate a signal when the counter contents match one of the channel register contents. A variety of control functions facilitate the adaptation of the T12 structure to different application needs.

Besides the 3-phase PWM generation, the T12 block offers options for individual compare and capture functions, as well as dead-time control and hysteresis-like compare mode.

This section provides information about:

- T12 overview (see **Section 18.3.1**)
- Counting scheme (see **Section 18.3.2**)
- Compare modes (see **Section 18.3.3**)
- Compare mode output path (see **Section 18.3.4**)
- Capture modes (see **Section 18.3.5**)
- Shadow transfer (see **Section 18.3.6**)
- T12 operating mode selection (see **Section 18.3.7**)

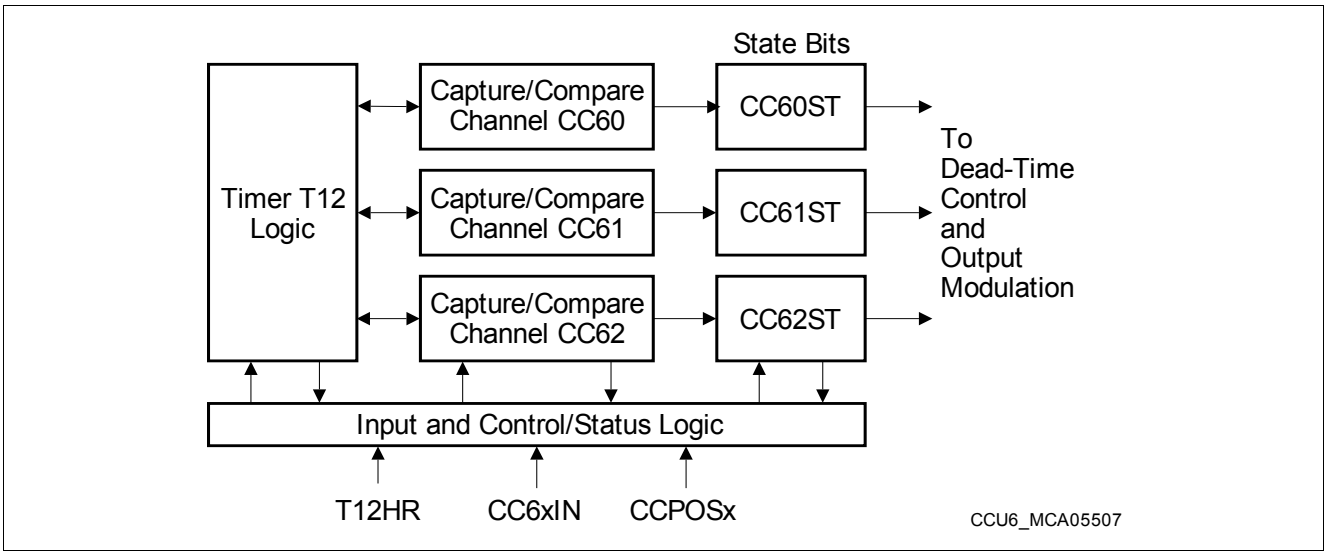

Figure 123 Overview Diagram of the Timer T12 Block

18.3.1 T12 Overview

Figure 124 shows a detailed block diagram of Timer T12. The functions of the timer T12 block are controlled by bits in registers TCTR0, TCTR2, and PISEL0.

Timer T12 receives its input clock (f_{T12}) from the module clock f_{CC6} via a programmable prescaler and an optional 1/256 divider or from an input signal T12HR. These options are controlled via bit fields T12CLK and T12PRE (see **Table 285**). T12 can count up or down, depending on the selected operation mode. A direction flag, CDIR, indicates the current counting direction.

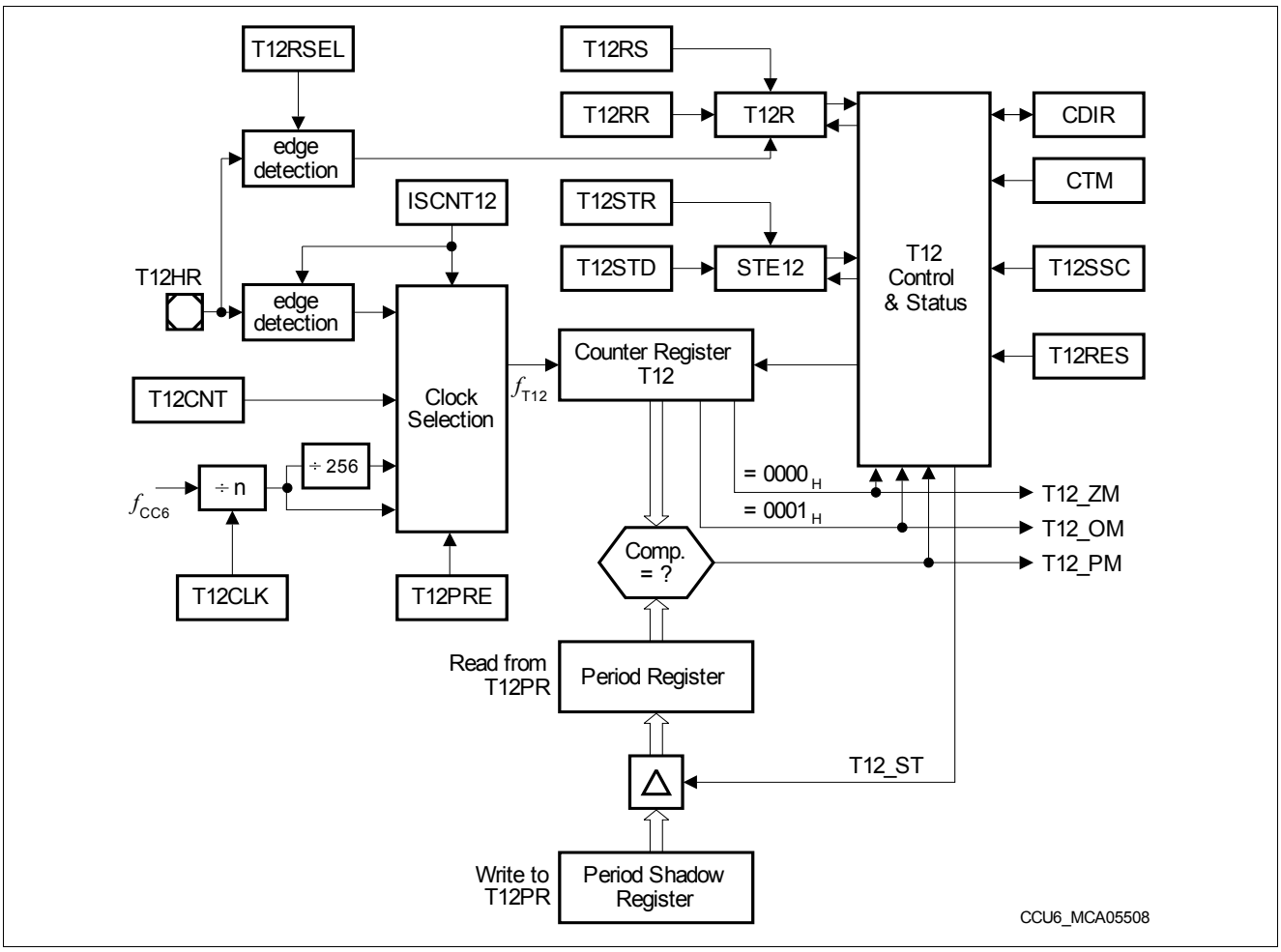

Figure 124 Timer T12 Logic and Period Comparators

Via a comparator, the T12 counter register T12 is connected to a Period Register T12PR. This register determines the maximum count value for T12.

In Edge-Aligned mode, T12 is cleared to 0000_H after it has reached the period value defined by T12PR. In Center-Aligned mode, the count direction of T12 is set from ‘up’ to ‘down’ after it has reached the period value (please note that in this mode, T12 exceeds the period value by one before counting down). In both cases, signal T12_PM (T12 Period Match) is generated. The Period Register receives a new period value from its Shadow Period Register.

A read access to T12PR delivers the current period value at the comparator, whereas a write access targets the Shadow Period Register to prepare another period value. The transfer of a new period value from the Shadow Period Register into the Period Register (see **Section 18.3.6**) is controlled via the ‘T12 Shadow Transfer’ control signal, T12_ST. The generation of this signal depends on the operating mode and on the shadow transfer enable bit STE12. Providing a shadow register for the period value as well as for other values related to the generation of the PWM signal allows a concurrent update by software for all relevant parameters.

Two further signals indicate whether the counter contents are equal to 0000_H (T12_ZM = zero match) or 0001_H (T12_OM = one match). These signals control the counting and switching behavior of T12.

The basic operating mode of T12, either Edge-Aligned mode (**Figure 125**) or Center-Aligned mode (**Figure 126**), is selected via bit CTM. A Single-Shot control bit, T12SSC, enables an automatic stop of the timer when the current counting period is finished (see **Figure 127** and **Figure 128**).

The start or stop of T12 is controlled by the Run bit T12R that can be modified by bits in register TCTR4. The run bit can be set/cleared by software via the associated set/clear bits T12RS or T12RR, it can be set by a selectable edge of the input signal T12HR (TCTR2.T12RSEL), or it is cleared by hardware according to preselected conditions.

The timer T12 run bit T12R must not be set while the applied T12 period value is zero. Timer T12 can be cleared via control bit T12RES. Setting this write-only bit does only clear the timer contents, but has no further effects, for example, it does not stop the timer.

The generation of the T12 shadow transfer control signal, T12_ST, is enabled via bit STE12. This bit can be set or reset by software indirectly through its associated set/clear control bits T12STR and T12STD.

While Timer T12 is running, write accesses to the count register T12 are not taken into account. If T12 is stopped and the Dead-Time counters are 0, write actions to register T12 are immediately taken into account.

18.3.2 T12 Counting Scheme

This section describes the clocking and counting capabilities of T12.

18.3.2.1 Clock Selection

In **Timer Mode** (PISEL2.ISCNT12 = 00_B), the input clock f_{T12} of Timer T12 is derived from the internal module clock f_{CC6} through a programmable prescaler and an optional 1/256 divider. The resulting prescaler factors are listed in **Table 285**. The prescaler of T12 is cleared while T12 is not running (TCTR0.T12R = 0) to ensure reproducible timings and delays.

Table 285 Timer T12 Input Frequency Options

T12CLK	Resulting Input Clock f_{T12} Prescaler Off (T12PRE = 0)	Resulting Input Clock f_{T12} Prescaler On (T12PRE = 1)
000_B	f_{CC6}	f_{CC6} / 256
001_B	f_{CC6} / 2	f_{CC6} / 512
010_B	f_{CC6} / 4	f_{CC6} / 1024
011_B	f_{CC6} / 8	f_{CC6} / 2048
100_B	f_{CC6} / 16	f_{CC6} / 4096
101_B	f_{CC6} / 32	f_{CC6} / 8192
110_B	f_{CC6} / 64	f_{CC6} / 16384
111_B	f_{CC6} / 128	f_{CC6} / 32768

In **Counter Mode**, timer T12 counts one step:

- If a 1 is written to TCTR4.T12CNT and PISEL2.ISCNT12 = 01_B
- If a rising edge of input signal T12HR is detected and PISEL2.ISCNT12 = 10_B
- If a falling edge of input signal T12HR is detected and PISEL2.ISCNT12 = 11_B

18.3.2.2 Edge-Aligned / Center-Aligned Mode

In **Edge-Aligned Mode** (CTM = 0), timer T12 is always counting upwards (CDIR = 0). When reaching the value given by the period register (period-match T12_PM), the value of T12 is cleared with the next counting step (saw tooth shape).

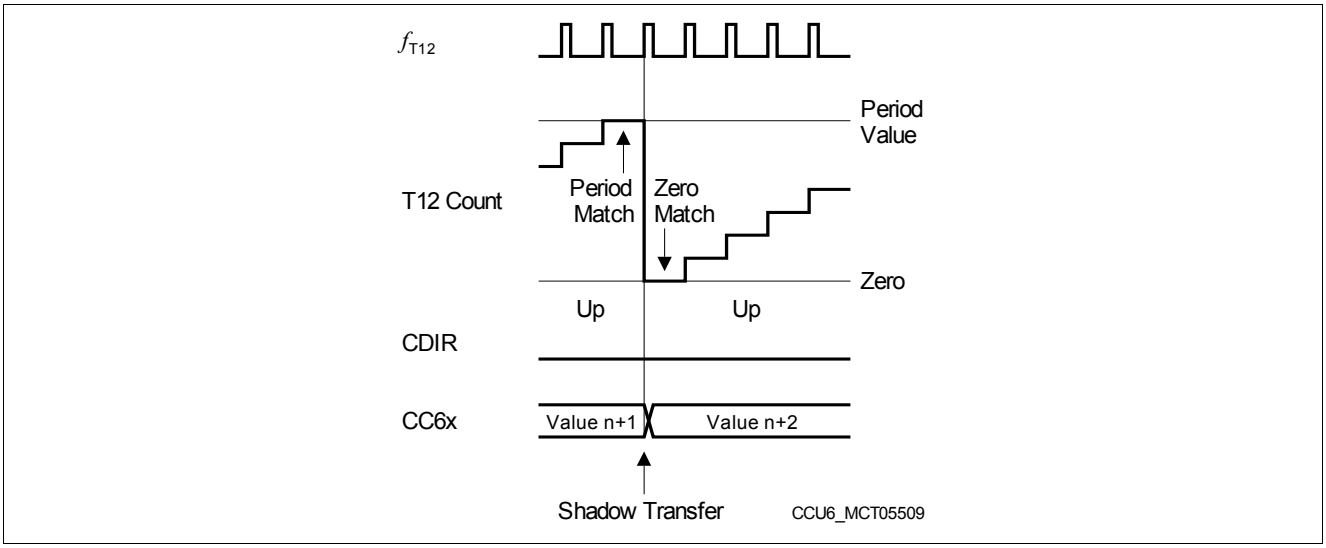

Figure 125 T12 Operation in Edge-Aligned Mode

As a result, in Edge-Aligned mode, the timer period is given by:

$T12_{PER}$ = <Period-Value> + 1; in T12 clocks (f_{T12}) (7)

In **Center-Aligned Mode** (CTM = 1), timer T12 is counting upwards or downwards (triangular shape). When reaching the value given by the period register (period-match T12_PM) while counting upwards (CDIR = 0), the counting direction control bit CDIR is changed to downwards (CDIR = 1) with the next counting step.

When reaching the value 0001_H (one-match T12_OM) while counting downwards, the counting direction control bit CDIR is changed to upwards with the next counting step.

As a result, in Center.Aligned mode, the timer period is given by:

$T12_{PER}$ = (<Period-Value> + 1) x2; in T12 clocks (f_{T12}) (8)

- With the next clock event of f_{T12} the count direction is set to counting up (CDIR = 0) when the counter reaches 0001_H while counting down.
- With the next clock event of f_{T12} the count direction is set to counting down (CDIR = 1) when the Period-Match is detected while counting up.
- With the next clock event of f_{T12} the counter counts up while CDIR = 0 and it counts down while CDIR = 1.

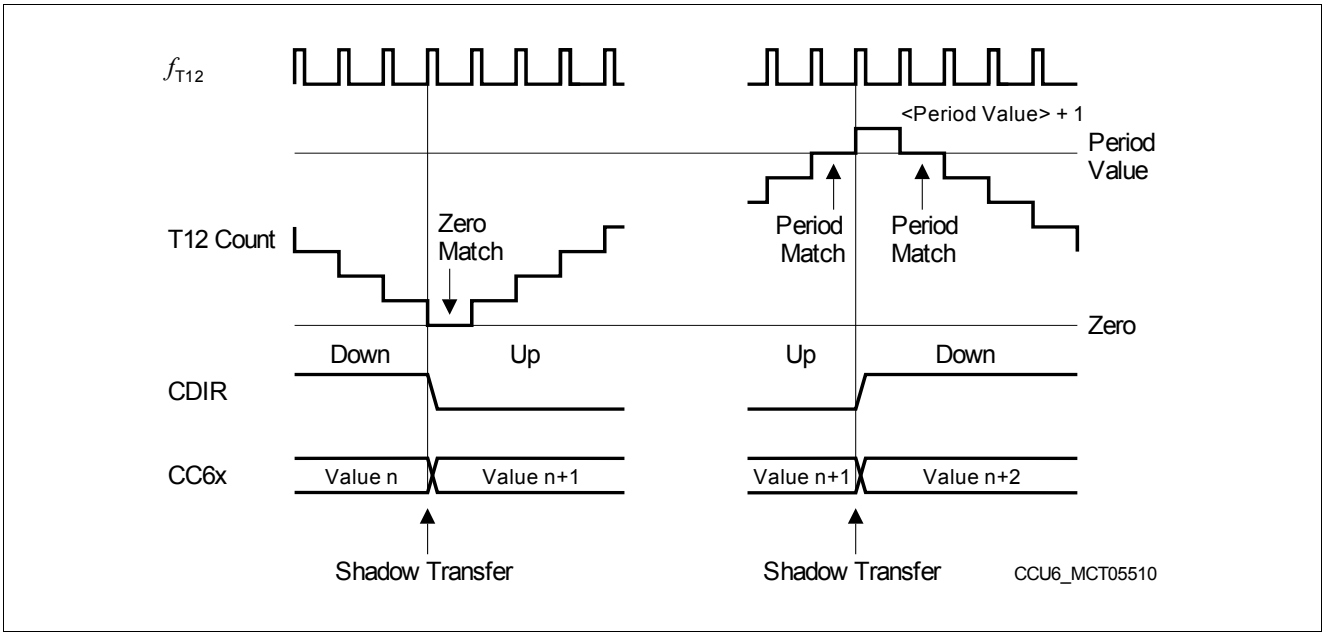

Figure 126 T12 Operation in Center-Aligned Mode

*Note: Bit CDIR changes with the next timer clock event after the one-match or the period-match. Therefore, the timer continues counting in the previous direction for one cycle before actually changing its direction (see **Figure 126**).*

18.3.2.3 Single-Shot Mode

In Single-Shot Mode, the timer run bit T12R is cleared by hardware. If bit T12SSC = 1, the timer T12 will stop when the current timer period is finished.

In Edge-Aligned mode, T12R is cleared when the timer becomes zero after having reached the period value (see **Figure 127**).

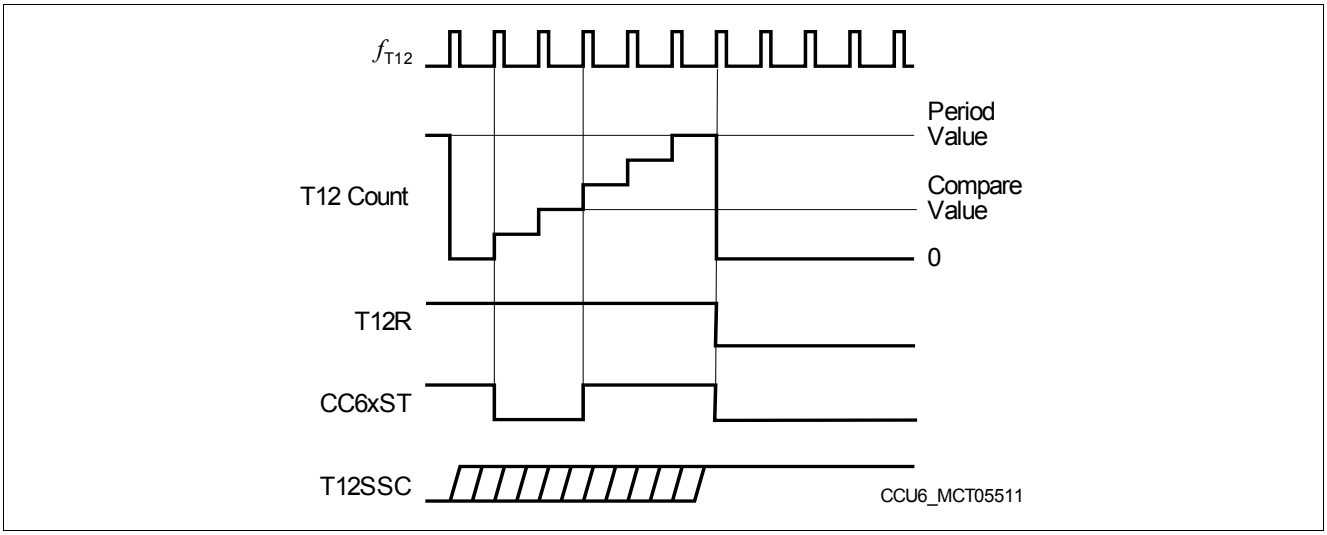

Figure 127 Single-Shot Operation in Edge-Aligned Mode

In Center-Aligned mode, the period is finished when the timer has counted down to zero (one clock cycle after the one-match while counting down, see **Figure 128**).

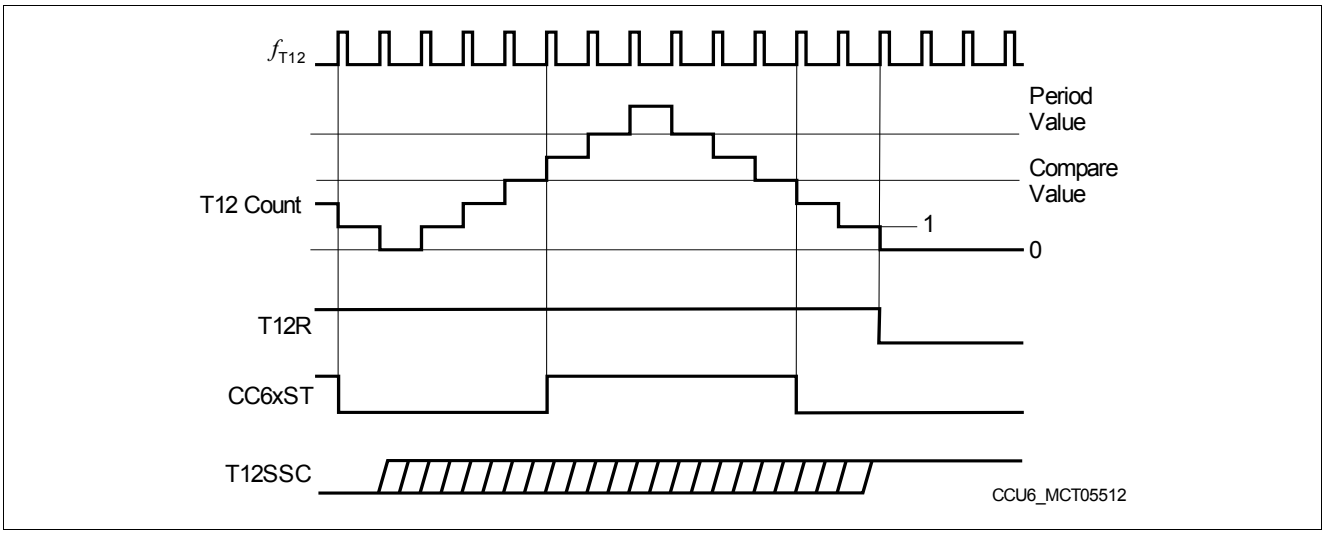

Figure 128 Single-Shot Operation in Center-Aligned Mode

18.3.3 T12 Compare Mode

Associated with Timer T12 are three individual capture/compare channels, that can perform compare or capture operations with regard to the contents of the T12 counter. The capture functions are explained in **Section 18.3.5**.

18.3.3.1 Compare Channels

In Compare Mode (see **Figure 129**), the three individual compare channels CC60 CC61, and CC62 can generate a three-phase PWM pattern.

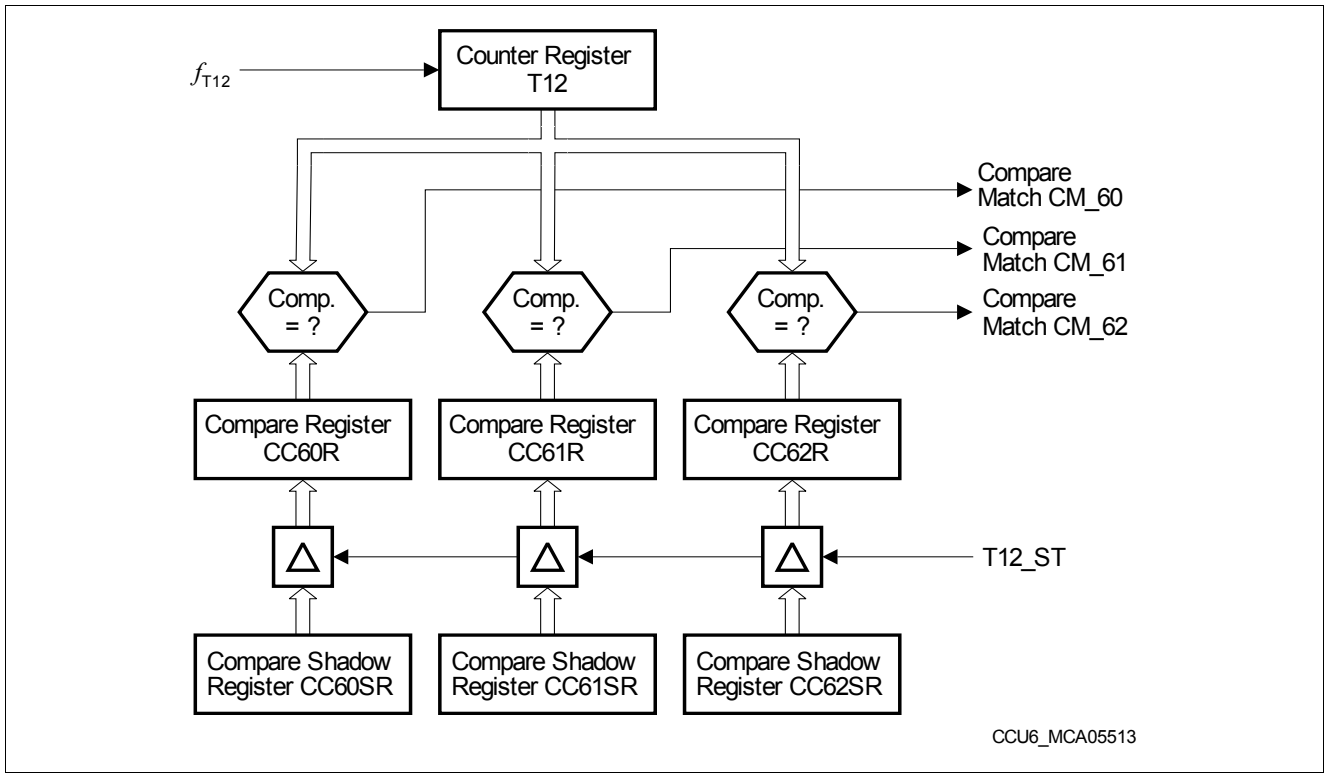

Figure 129 T12 Channel Comparators

Each compare channel is connected to the T12 counter register via its individual equal-to comparator, generating a match signal when the contents of the counter matches the contents of the associated compare register. Each channel consists of the comparator and a double register structure - the actual compare register CC6xR, feeding the comparator, and an associated shadow register CC6xSR, that is preloaded by software and transferred into the compare register when signal T12 shadow transfer, T12_ST, gets active. Providing a shadow register for the compare value as well as for other values related to the generation of the PWM signal facilitates a concurrent update by software for all relevant parameters of a three-phase PWM.

18.3.3.2 Channel State Bits

Associated with each (compare) channel is a State Bit, CMPSTAT.CC6xST, holding the status of the compare (or capture) operation (see **Figure 130**). In compare mode, the State Bits are modified according to a set of switching rules, depending on the current status of timer T12.

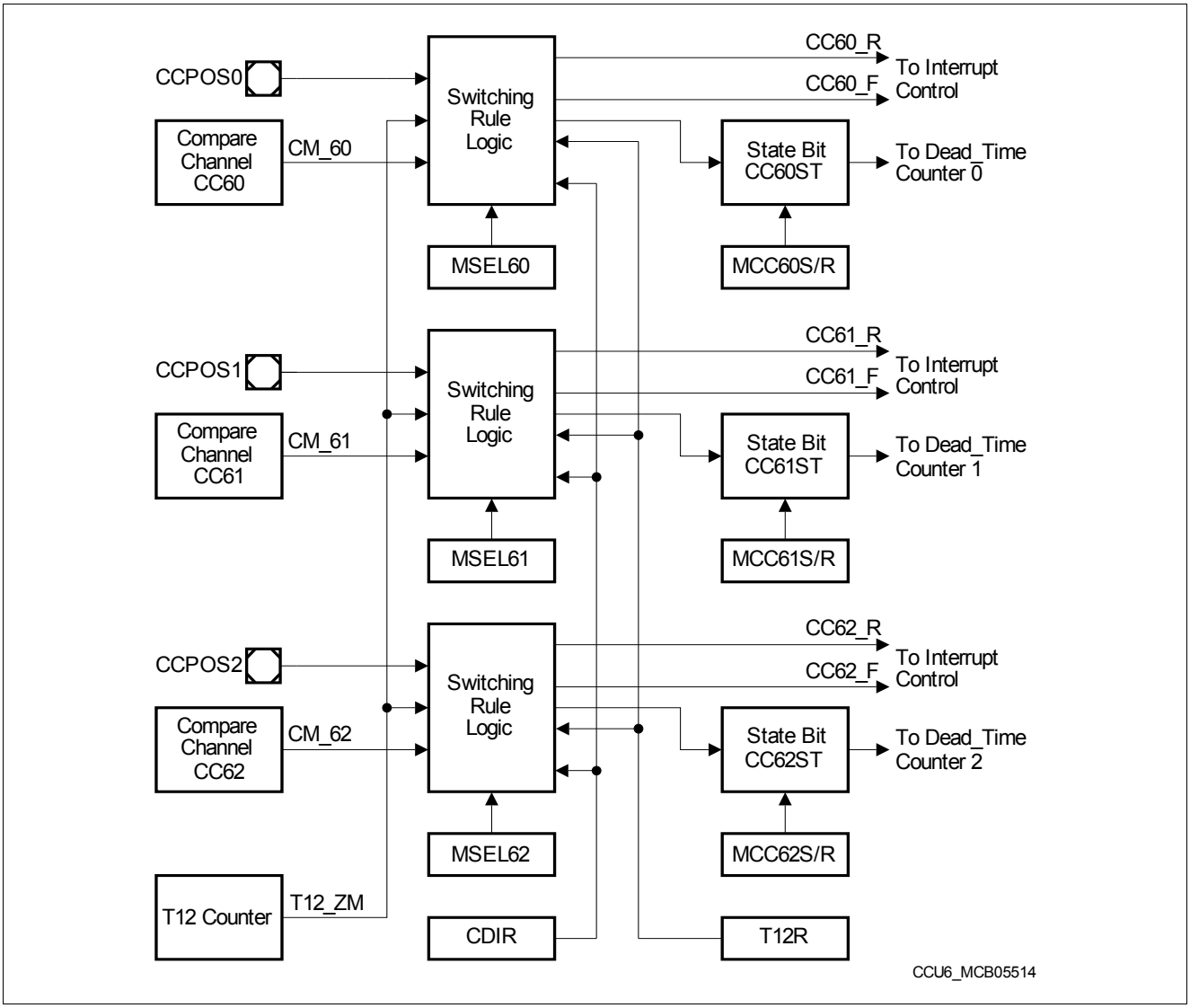

Figure 130 Compare State Bits for Compare Mode

The inputs to the switching rule logic for the CC6xST bits are the timer direction (CDIR), the timer run bit (T12R), the timer T12 zero-match signal (T12_ZM), and the actual individual compare-match signals CM_6x as well as the mode control bits, T12MSEL.MSEL6x.

In addition, each state bit can be set or cleared by software via the appropriate set and reset bits in register CMPMODIF, MCC6xS and MCC6xR. The input signals CCPOSx are used in hysteresis-like compare mode, whereas in normal compare mode, these inputs are ignored.

Note: In Hall Sensor, single shot or capture modes, additional/different rules are taken into account (see related sections).

A compare interrupt event CC6x_R is signaled when a compare match is detected while counting upwards, whereas the compare interrupt event CC6x_F is signaled when a compare match is detected while counting down. The actual setting of a State Bit has no influence on the interrupt generation in compare mode.

A modification of a State Bit CC6xST by the switching rule logic due to a compare action is only possible while Timer T12 is running (T12R = 1). If this is the case, the following switching rules apply for setting and clearing the State Bits in Compare Mode (illustrated in **Figure 131** and **Figure 132**):

A State Bit **CC6xST is set** to 1:

- with the next T12 clock (f_{T12}) after a compare-match when T12 is counting up (i.e., when the counter is incremented above the compare value);
- with the next T12 clock (f_{T12}) after a zero-match AND a parallel compare-match when T12 is counting up.

A State Bit **CC6xST is cleared** to 0:

- with the next T12 clock (f_{T12}) after a compare-match when T12 is counting down (i.e., when the counter is decremented below the compare value in center-aligned mode);
- with the next T12 clock (f_{T12}) after a zero-match AND NO parallel compare-match when T12 is counting up.

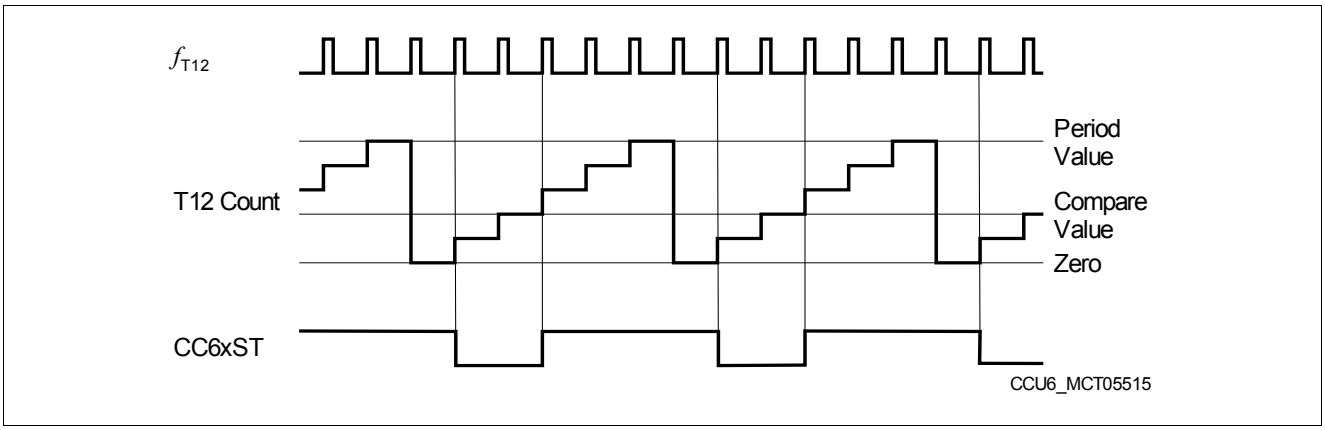

Figure 131 Compare Operation, Edge-Aligned Mode

Figure 133 illustrates some more examples for compare waveforms. It is important to note that in these examples, it is assumed that some of the compare values are changed while the timer is running. This change is performed via a software preload of the Shadow Register, CC6xSR. The value is transferred to the actual Compare Register CC6xR with the T12 Shadow Transfer signal, T12_ST, that is assumed to be enabled.

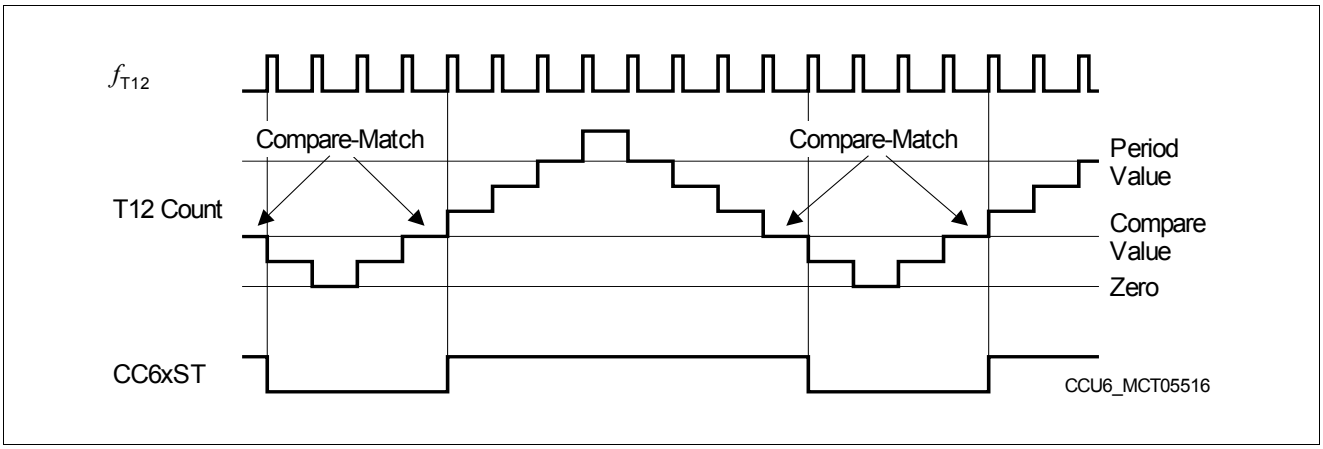

Figure 132 Compare Operation, Center-Aligned Mode

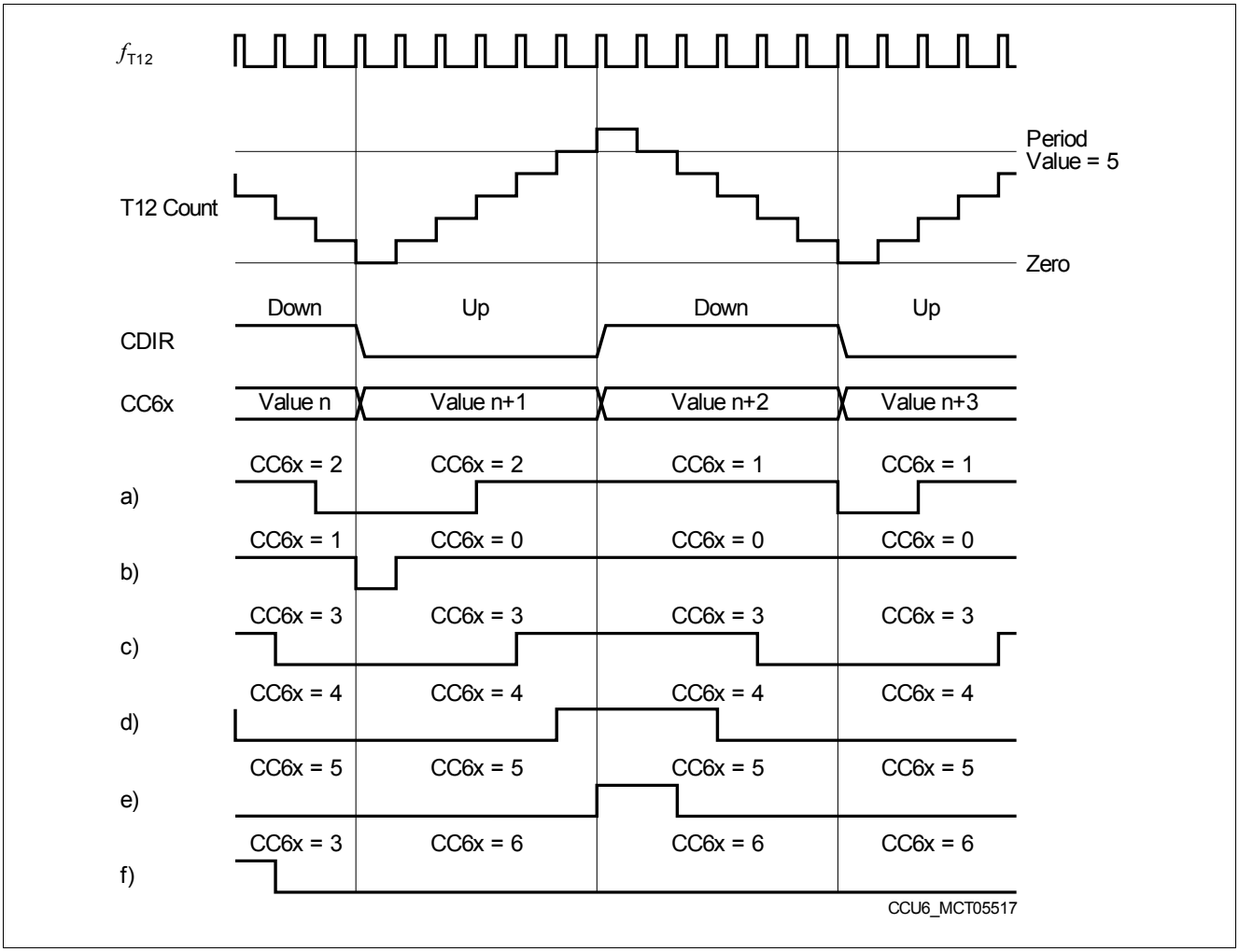

Figure 133 Compare Waveform Examples

Example b) illustrates the transition to a duty cycle of 100%. First, a compare value of 0001_H is used, then changed to 0000_H. Please note that a low pulse with the length of one T12 clock is still produced in the cycle where the new value 0000_H is in effect; this pulse originates from the previous value 0001_H. In the following timer cycles, the State Bit CC6xST remains at 1, producing a 100% duty cycle signal. In this case, the compare rule ‘zero-match AND compare-match’ is in effect.

Example f) shows the transition to a duty cycle of 0%. The new compare value is set to <Period-Value> + 1, and the State Bit CC6ST remains cleared.

Figure 134 illustrates an example for the waveforms of all three channels. With the appropriate dead-time control and output modulation, a very efficient 3-phase PWM signal can be generated.

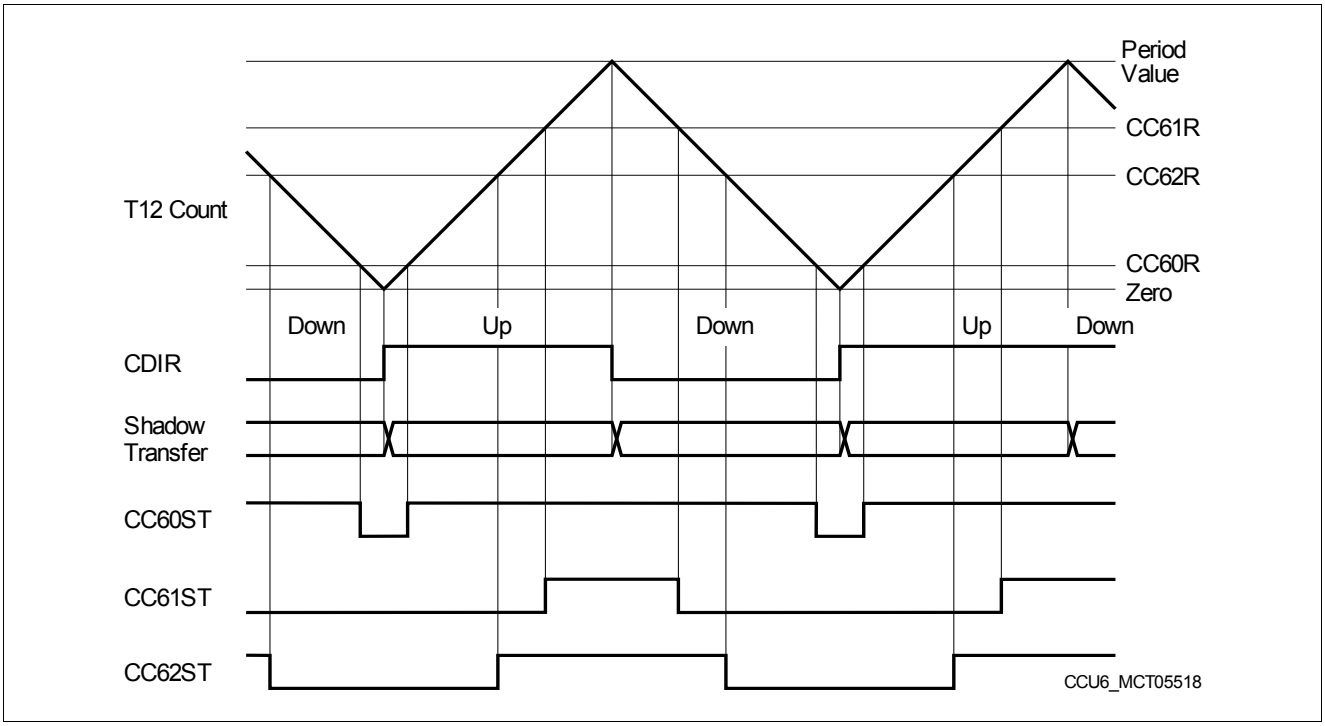

Figure 134 Three-Channel Compare Waveforms

18.3.3.3 Hysteresis-Like Control Mode

The hysteresis-like control mode (T12MSEL.MSEL6x = 1001_B) offers the possibility to switch off the PWM output if the input CCPOSx becomes 0 by clearing the State Bit CC6xST. This can be used as a simple motor control feature by using a comparator indicating, e.g., overcurrent. While CCPOSx = 0, the PWM outputs of the corresponding channel are driving their passive levels, because the setting of bit CC6xST is only possible while CCPOSx = 1.

As long as input CCPOSx is 0, the corresponding State Bit is held 0. When CCPOSx is at high level, the outputs can be in active state and are determined by bit CC6xST (see **Figure 130** for the state bit logic and **Figure 135** for the output paths). The CCPOSx inputs are evaluated with f_{CC6}.

This mode can be used to introduce a timing-related behavior to a hysteresis controller. A standard hysteresis controller detects if a value exceeds a limit and switches its output according to the compare result. Depending on the operating conditions, the switching frequency and the duty cycle are not fixed, but change permanently.

If (outer) time-related control loops based on a hysteresis controller in an inner loop should be implemented, the outer loops show a better behavior if they are synchronized to the inner loops. Therefore, the hysteresis-like mode can be used, that combines timer-related switching with a hysteresis controller behavior. For example, in this mode, an output can be switched on according to a fixed time base, but it is switched off as soon as a falling edge is detected at input CCPOSx.

This mode can also be used for standard PWM with overcurrent protection. As long as there is no low level signal at pin CCPOSx, the output signals are generated in the normal manner as described in the previous sections. Only if input CCPOSx shows a low level, e.g. due to the detection of overcurrent, the outputs are shut off to avoid harmful stress to the system.

18.3.4 Compare Mode Output Path

Figure 135 gives an overview on the signal path from a channel State Bit to its output pin in its simplest form. As illustrated, a user has a variety of controls to determine the desired output signal switching behavior in relation to the current state of the State Bit, CC6xST. Please refer to Section 18.3.4.3 for details on the output modulation.

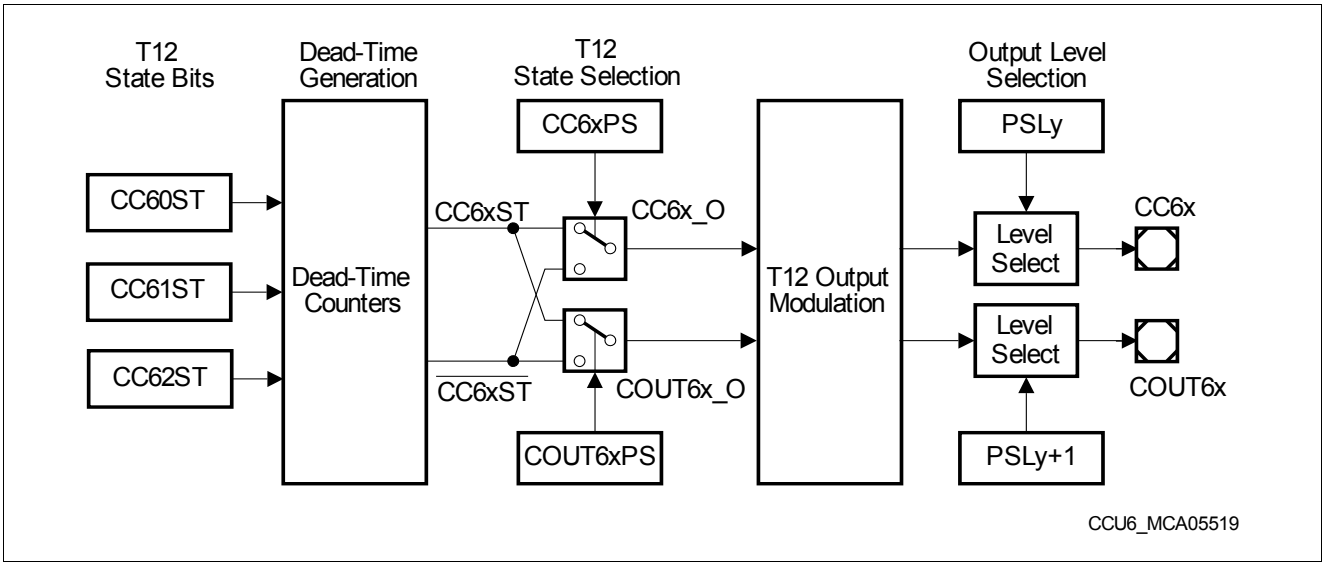

Figure 135 Compare Mode Simplified Output Path Diagram

The output path is based on signals that are defined as active or passive. The terms active and passive are not related to output levels, but to internal actions. This mainly applies for the modulation, where T12 and T13 signals are combined with the multi-channel signals and the trap function. The Output level Selection allows the user to define the output level at the output pin for the passive state (inverted level for the active state). It is recommended to configure this block in a way that an external power switch is switched off while the CCU6 delivers an output signal in the passive state.

18.3.4.1 Dead-Time Generation

The generation of (complementary) signals for the High Side and the low-side switches of one power inverter phase is based on the same compare channel. For example, if the High Side switch should be active while the T12 counter value is above the compare value (State Bit = 1), then the low-side switch should be active while the counter value is below the compare value (State Bit = 0).

In most cases, the switching behavior of the connected power switches is not symmetrical concerning the switch-on and switch-off times. A general problem arises if the time for switch-on is smaller than the time for switch-off of the power device. In this case, a short-circuit can occur in the inverter bridge leg, which may damage the complete system. In order to solve this problem by HW, this capture/compare unit contains a programmable Dead-Time Generation Block, that delays the passive to active edge of the switching signals by a programmable time (the active to passive edge is not delayed).

The Dead-Time Generation Block, illustrated in Figure 136, is built in a similar way for all three channels of T12. It is controlled by bits in register T12DTC. Any change of a CC6xST State Bit activates the corresponding Dead-Time Counter, that is clocked with the same input clock as T12 (f_{T12}). The length of the dead-time can be programmed by bit field DTM. This value is identical for all three channels. Writing TCTR4.DTRES = 1 sets all dead-times to passive.

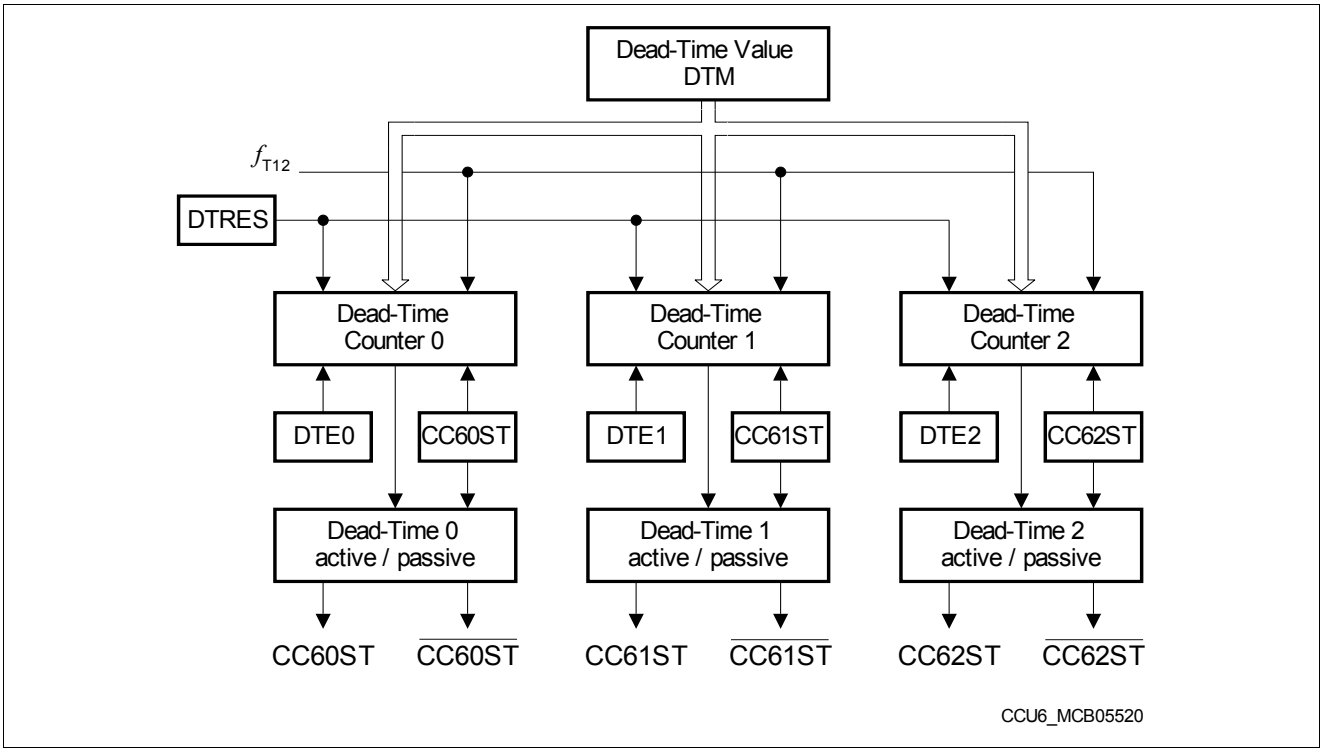

Figure 136 Dead-Time Generation Block Diagram

Each of the three dead-time counters has its individual dead-time enable bit, DTEx. An enabled dead-time counter generates a dead-time delaying the passive-to-active edge of the channel output signal. The change in a State Bit CC6xST is not taken into account while the dead-time generation of this channel is currently in progress (active). This avoids an unintentional additional dead-time if a State Bit CC6xST changes too early.

A disabled dead-time counter is always considered as passive and does not delay any edge of CC6xST.

Based on the State Bits CC6xST, the Dead-Time Generation Block outputs a direct signal CC6xST and an inverted signal $\overline{CC6xST}$ for each compare channel, each masked with the effect of the related Dead-Time Counters (waveforms illustrated in **Figure 137**).

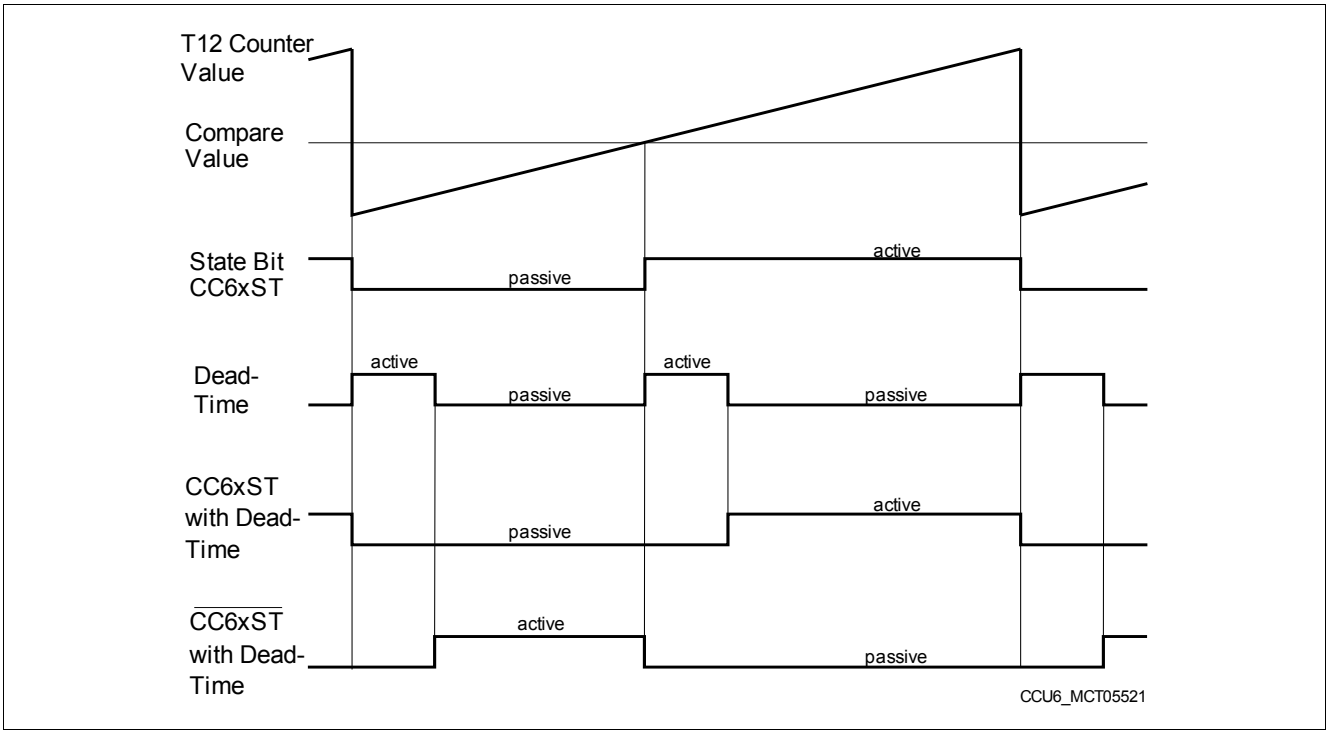

Figure 137 Dead-Time Generation Waveforms

18.3.4.2 State Selection

To support a wide range of power switches and drivers, the state selection offers the flexibility to define when an output can be active and can be modulated, especially useful for **complementary or multi-phase PWM** signals.

The state selection is based on the signals CC6xST and $\overline{\text{CC6xST}}$ delivered by the dead-time generator (see **Figure 135**). Both signals are never active at the same time, but can be passive at the same time. This happens during the dead-time of each compare channel after a change of the corresponding State Bit CC6xST.

The user can select independently for each output signal CC6xO and COUT6xO if it should be active before or after the compare value has been reached (see register CMPSTAT). With this selection, the active (conducting) phases of complementary power switches in a power inverter bridge leg can be positioned with respect to the compare value (e.g. signal CC6xO can be active before, whereas COUT6xO can be active after the compare value is reached). Like this, the output modulation, the trap logic and the output level selection can be programmed independently for each output signal, although two output signals are referring to the same compare channel.

18.3.4.3 Output Modulation and Level Selection

The last block of the data path is the Output Modulation block. Here, all the modulation sources and the trap functionality are combined and control the actual level of the output pins (controlled by the modulation enable bits T1xMODENy and MCMEN in register MODCTR). The following signal sources can be combined here **for each T12 output signal** (see **Figure 138** for compare channel CC60):

- A **T12 related compare signal** CC6x_O (for outputs CC6x) or COUT6x_O (for outputs COUT6x) delivered by the T12 block (state selection with dead-time) with an individual enable bit T12MODENy per output signal (y = 0, 2, 4 for outputs CC6x and y = 1, 3, 5 for outputs COUT6x)
- The **T13 related compare signal** CC63_O delivered by the T13 state selection with an individual enable bit T13MODENy per output signal (y = 0, 2, 4 for outputs CC6x and y = 1, 3, 5 for outputs COUT6x)
- A **multi-channel output signal** MCMPy (y = 0, 2, 4 for outputs CC6x and y = 1, 3, 5 for outputs COUT6x) with a common enable bit MCMEN
- The **trap state** TRPS with an individual enable bit TRPENy per output signal (y = 0, 2, 4 for outputs CC6x and y = 1, 3, 5 for outputs COUT6x)

If one of the modulation input signals CC6x_O/COUT6x_O, CC63_O, or MCMPy of an output modulation block is enabled and is at passive state, the modulated is also in passive state, regardless of the state of the other signals that are enabled. Only if all enabled signals are in active state the modulated output shows an active state. If no modulation input is enabled, the output is in passive state.

If the Trap State is active (TRPS = 1), then the outputs that are enabled for the trap signal (by TRPENy = 1) are set to the passive state.

The output of each of the modulation control blocks is connected to a level select block that is configured by register PSLR. It offers the option to determine the actual output level of a pin, depending on the state of the output line (decoupling of active/passive state and output polarity) as specified by the Passive State Select bit PSLy. If the modulated output signal is in the passive state, the level specified directly by PSLy is output. If it is in the active state, the inverted level of PSLy is output. This allows the user to adapt the polarity of an active output signal to the connected circuitry.

The PSLy bits have shadow registers to allow for updates without undesired pulses on the output lines. The bits related to CC6x and COUT6x (x = 0, 1, 2) are updated with the T12 shadow transfer signal (T12_ST). A read action returns the actually used values, whereas a write action targets the shadow bits. Providing a shadow register for the PSL value as well as for other values related to the generation of the PWM signal facilitates a concurrent update by software for all relevant parameters.

Figure 138 shows the output modulation structure for compare channel CC60 (output signals CC60 and COUT60). A similar structure is implemented for the other two compare channels CC61 and CC62.

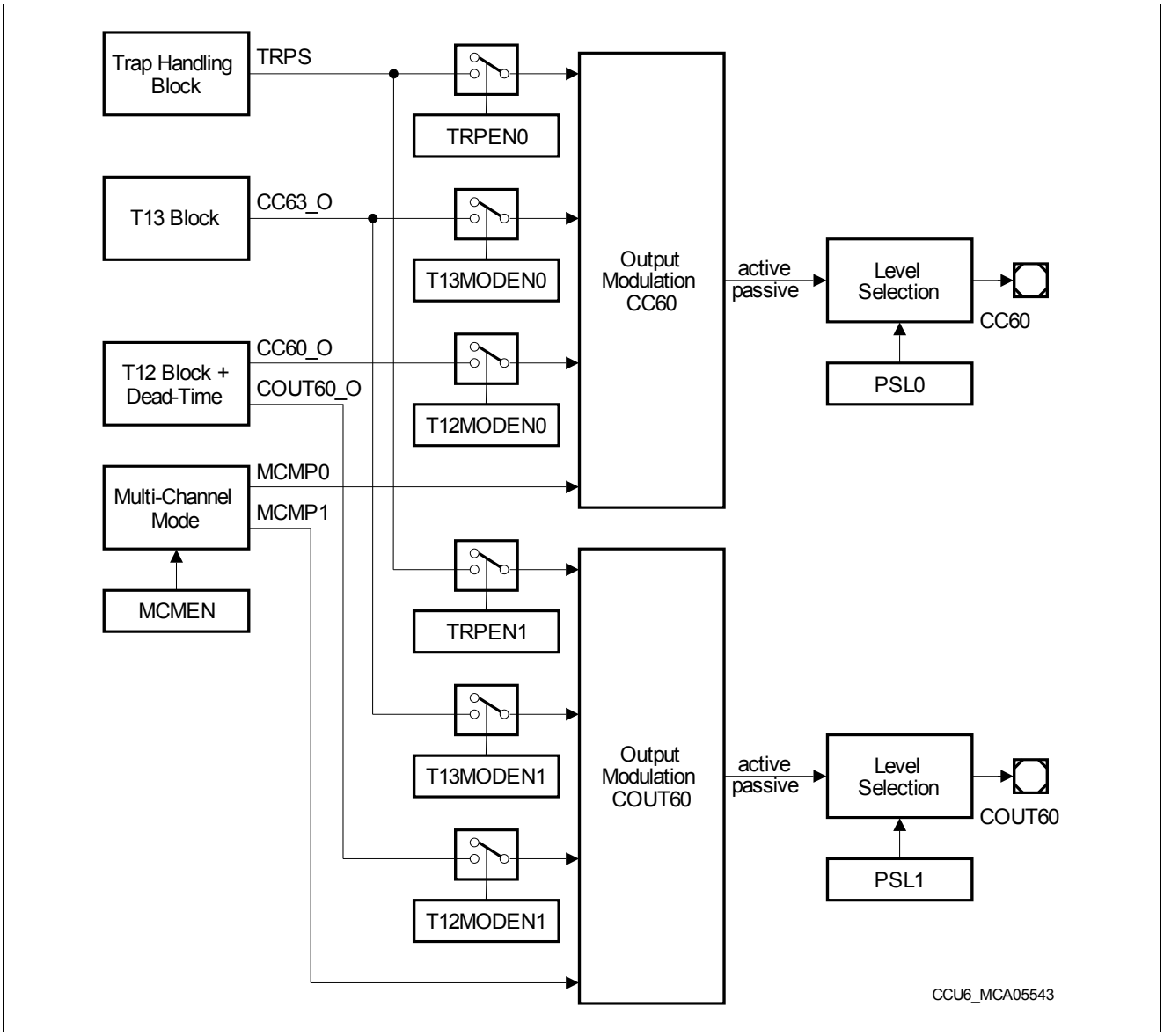

Figure 138 Output Modulation for Compare Channel CC60

18.3.5 T12 Capture Modes

Each of the three channels of the T12 Block can also be used to capture T12 time information in response to an external signal CC6xIN.

In capture mode, the interrupt event CC6x_R is detected when a rising edge is detected at the input CC6xIN, whereas the interrupt event CC6x_F is detected when a falling edge is detected.

There are a number of different modes for capture operation. In all modes, both of the registers of a channel are used. The selection of the capture modes is done via the T12MSEL.MSEL6x bit fields and can be selected individually for each of the channels.

Table 286 Capture Modes Overview

MSEL6x	Mode	Signal	Active Edge	CC6nSR Stored in	T12 Stored in
0100_B	1	CC6xIN	Rising	–	CC6xR
		CC6xIN	Falling	–	CC6xSR
0101_B	2	CC6xIN	Rising	CC6xR	CC6xSR
0110_B	3	CC6xIN	Falling	CC6xR	CC6xSR
0111_B	4	CC6xIN	Any	CC6xR	CC6xSR

Figure 139 illustrates **Capture Mode 1**. When a rising edge (0-to-1 transition) is detected at the corresponding input signal CC6xIN, the current contents of Timer T12 are captured into register CC6xR. When a falling edge (1-to-0 transition) is detected at the input signal CC6xIN, the contents of Timer T12 are captured into register CC6xSR.

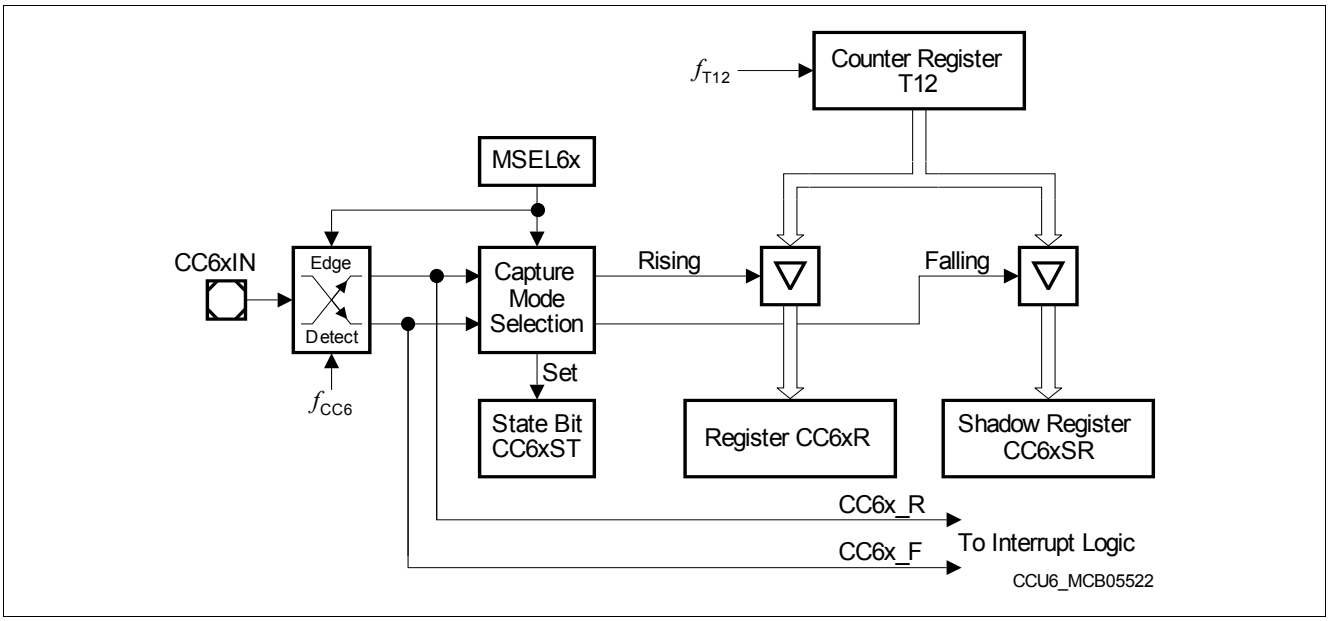

Figure 139 Capture Mode 1 Block Diagram

Capture Modes 2, 3 and 4 are shown in Figure 140. They differ only in the active edge causing the capture operation. In each of the three modes, when the selected edge is detected at the corresponding input signal CC6xIN, the current contents of the shadow register CC6xSR are transferred into register CC6xR, and the current Timer T12 contents are captured in register CC6xSR (simultaneous transfer). The active edge is a rising edge of CC6xIN for Capture Mode 2, a falling edge for Mode 3, and both, a rising or a falling edge for Capture Mode 4, as shown in Table 286. These capture modes are very useful in cases where there is little time between two consecutive edges of the input signal.

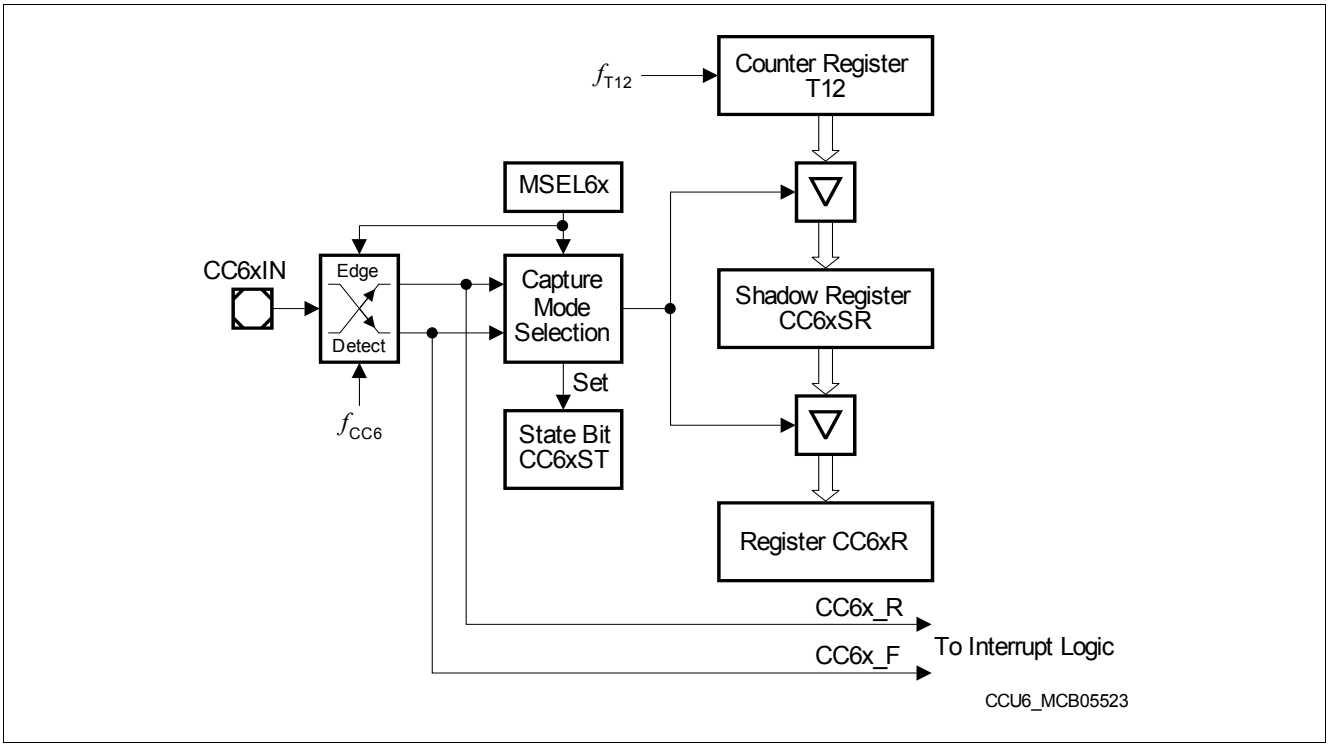

Figure 140 Capture Modes 2, 3 and 4 Block Diagram

Five further capture modes are called **Multi-Input Capture Modes**, as they use two different external inputs, signal CC6xIN and signal CCPOSx.

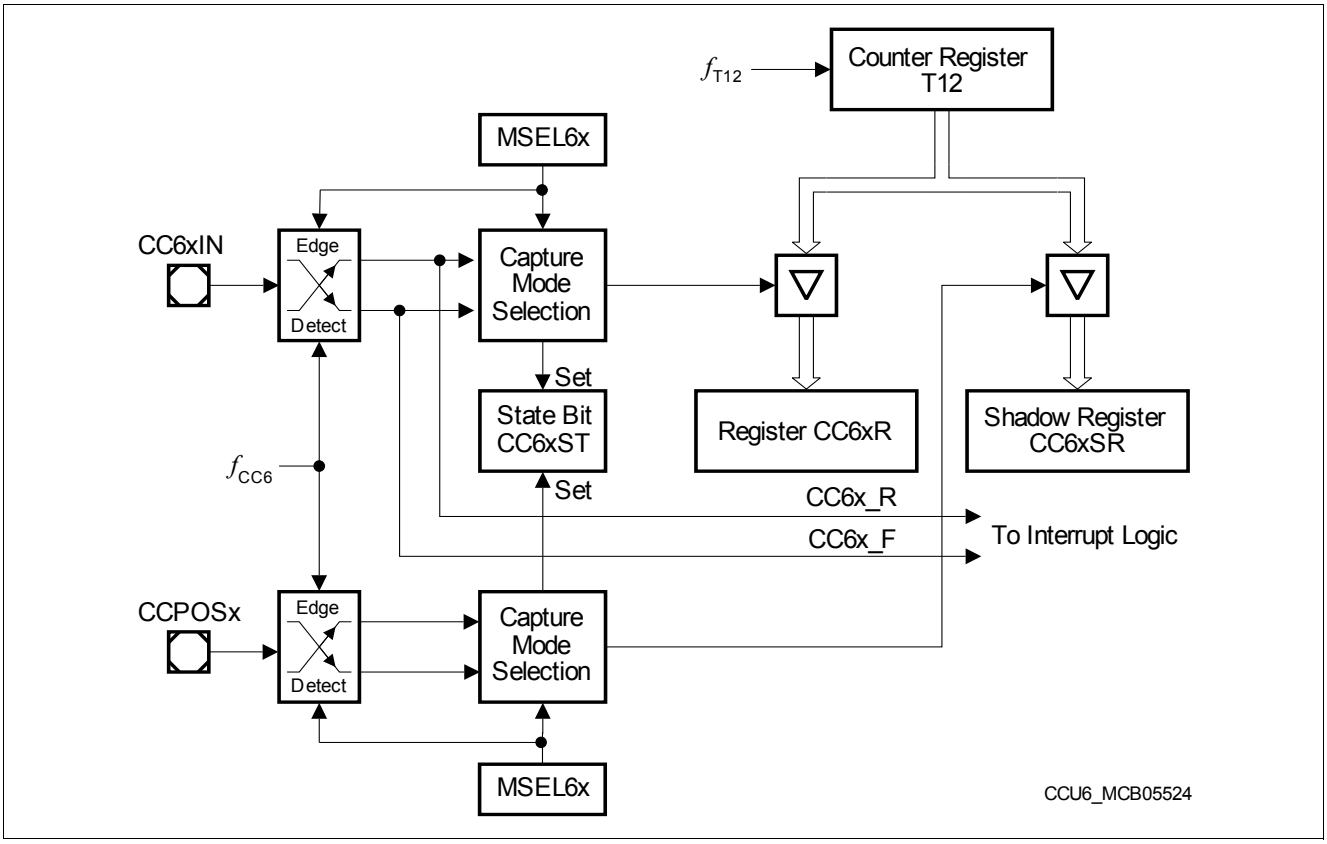

Figure 141 Multi-Input Capture Modes Block Diagram

In each of these modes, the current T12 contents are captured in register CC6xR in response to a selected event at signal CC6xIN, and in register CC6xSR in response to a selected event at signal CCPOSx. The possible events can be opposite input transitions, or the same transitions, or any transition at the two inputs. The different options are detailed in **Table 287**.

In each of the various capture modes, the Channel State Bit, CC6xST, is set to 1 when the selected capture trigger event at signal CC6xIN or CCPOSx has occurred. The State Bit is not cleared by hardware, but can be cleared by software.

In addition, appropriate signal lines to the interrupt logic are activated, that can generate an interrupt request to the CPU. Regardless of the selected active edge, all edges detected at signal CC6xIN can lead to the activation of the appropriate interrupt request line (see also **Section 18.8**).

Table 287 Multi-Input Capture Modes Overview

MSEL6x	Mode	Signal	Active Edge	T12 Stored in
1010_B	$_B$ 5	CC6xIN	Rising	CC6xR
		CCPOSx	Falling	CC6xSR
1011_B	$_B$ 6	CC6xIN	Falling	CC6xR
		CCPOSx	Rising	CC6xSR
1100_B	$_B$ 7	CC6xIN	Rising	CC6xR
		CCPOSx	Rising	CC6xSR

Table 287 Multi-Input Capture Modes Overview (cont'd)

MSEL6x	Mode	Signal	Active Edge	T12 Stored in
1101_B	$_B$ 8	CC6xIN	Falling	CC6xR
		CCPOSx	Falling	CC6xSR
1110_B	$_B$ 9	CC6xIN	Any	CC6xR
		CCPOSx	Any	CC6xSR
1111_B	–	reserved (no capture or compare action)		

18.3.6 T12 Shadow Register Transfer

A special shadow transfer signal (T12_ST) can be generated to facilitate updating the period and compare values of the compare channels CC60, CC61, and CC62 synchronously to the operation of T12. Providing a shadow register for values defining one PWM period facilitates a concurrent update by software for all relevant parameters. The next PWM period can run with a new set of parameters. The generation of this signal is requested by software via bit TCTR0.STE12 (set by writing 1 to the write-only bit TCTR4.T12STR, cleared by writing 1 to the write-only bit TCTR4.T12STD).

Figure 142 shows the shadow register structure and the shadow transfer signals, as well as on the read/write accessibility of the various registers.

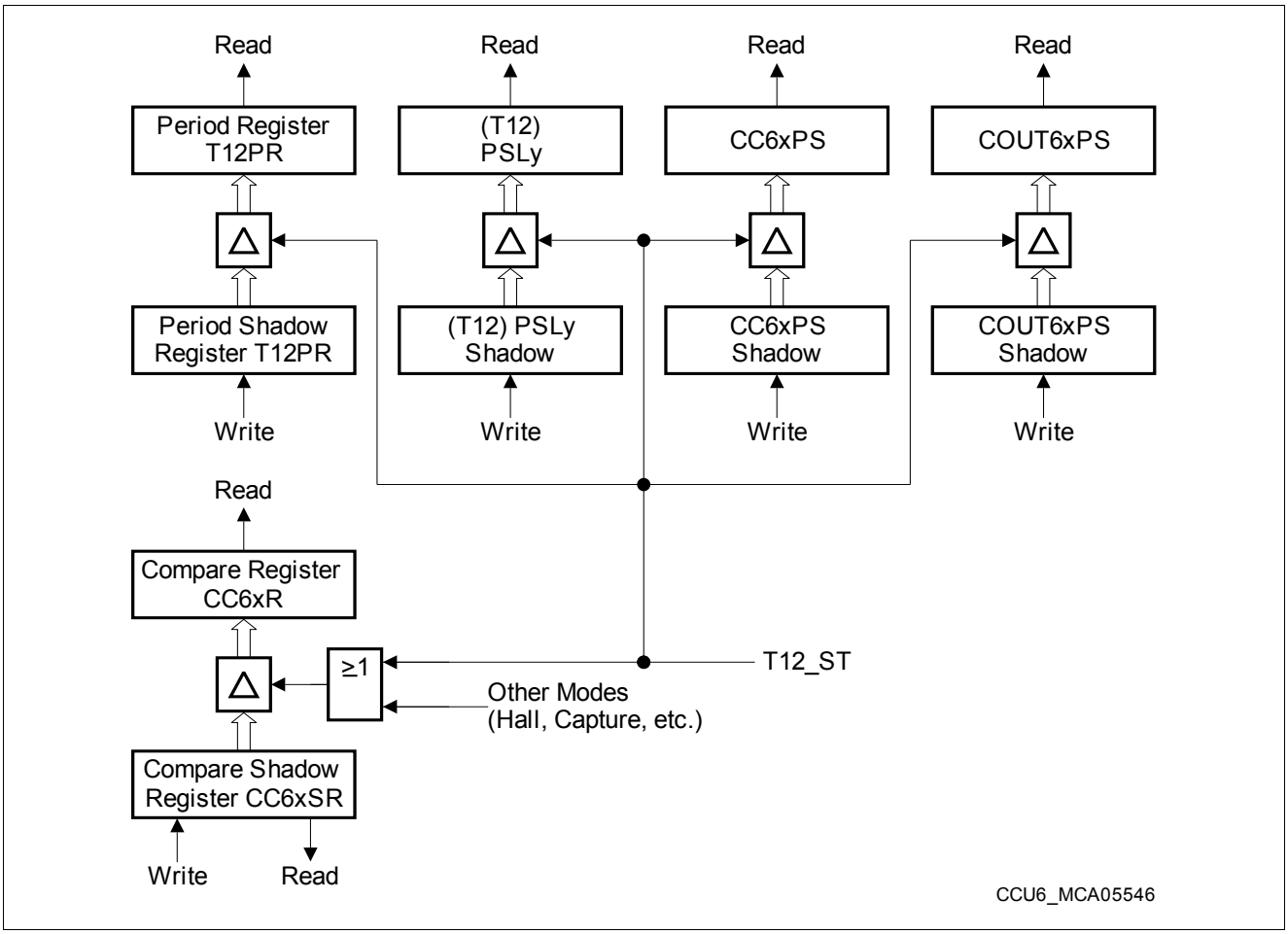

Figure 142 T12 Shadow Register Overview

A T12 shadow register transfer takes place (T12_ST active):

- while timer T12 is not running (T12R = 0), or
- STE12 = 1 and a Period-Match is detected while counting up, or
- STE12 = 1 and a One-Match is detected while counting down

When signal T12_ST is active, a shadow register transfer is triggered with the next cycle of the T12 clock. Bit STE12 is automatically cleared with the shadow register transfer.

18.3.7 Timer T12 Operating Mode Selection

The operating mode for the T12 channels are defined by the bit fields T12MSEL.MSEL6x.

Table 288 T12 Capture/Compare Modes Overview

MSEL6x	Selected operating mode
0000_B, 1111_B	Capture/Compare modes switched off
0001_B, 0010_B, 0011_B	Compare mode, see **Section 18.3.3** same behavior for all three codings
$01XX_B$	Double-Register Capture modes, see **Section 18.3.5**
1000_B	Hall Sensor Mode, see **Section 18.7** In order to properly enable this mode, all three MSEL6x fields have to be programmed to Hall Sensor mode.
1001_B	Hysteresis-like compare mode, see **Section 18.3.3.3**
1010_B, 1011_B, 1100_B, 1101_B, 1110_B	Multi-Input Capture modes, see **Section 18.3.5**

The clocking and counting scheme of the timers are controlled by the timer control registers TCTR0 and TCTR2. Specific actions are triggered by write operations to register TCTR4.

18.4 Operating Timer T13

Timer T13 is implemented similarly to Timer T12, but only with one channel in compare mode. A 16-bit up-counter is connected to a channel register via a comparator, that generates a signal when the counter contents match the contents of the channel register. A variety of control functions facilitate the adaptation of the T13 structure to different application needs. In addition, T13 can be started synchronously to timer T12 events.

This section provides information about:

- T13 overview (see **Section 18.4.1**)
- Counting scheme (see **Section 18.4.2**)
- Compare mode (see **Section 18.4.3**)
- Compare output path (see **Section 18.4.4**)
- Shadow register transfer (see **Section 18.4.5**)

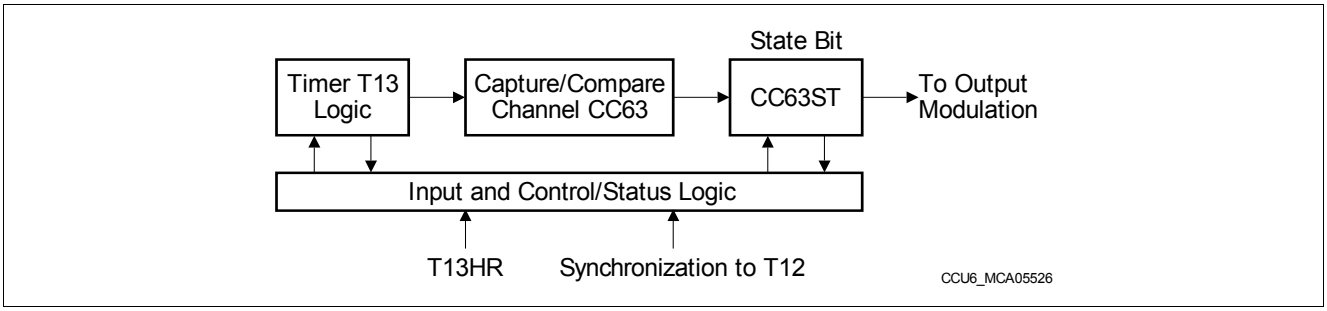

Figure 143 Overview Diagram of the Timer T13 Block

18.4.1 T13 Overview

Figure 144 shows a detailed block diagram of Timer T13. The functions of the timer T12 block are controlled by bits in registers TCTR0, TCTR2, and PISEL2.

Timer T13 receives its input clock, f_{T13}, from the module clock f_{CC6} via a programmable prescaler and an optional 1/256 divider or from an input signal T13HR. T13 can only count up (similar to the Edge-Aligned mode of T12).

Via a comparator, the timer T13 Counter Register T13 is connected to the Period Register T13PR. This register determines the maximum count value for T13. When T13 reaches the period value, signal T13_PM (T13 Period Match) is generated and T13 is cleared to 0000_H with the next T13 clock edge. The Period Register receives a new period value from its Shadow Period Register, T13PS, that is loaded via software. The transfer of a new period value from the shadow register into T13PR is controlled via the ‘T13 Shadow Transfer’ control signal, T13_ST. The generation of this signal depends on the associated control bit STE13. Providing a shadow register for the period value as well as for other values related to the generation of the PWM signal facilitates a concurrent update by software for all relevant parameters (refer to **Table 18.4.5**). Another signal indicates whether the counter contents are equal to 0000_H (T13_ZM).

A Single-Shot control bit, T13SSC, enables an automatic stop of the timer when the current counting period is finished (see **Figure 146**).

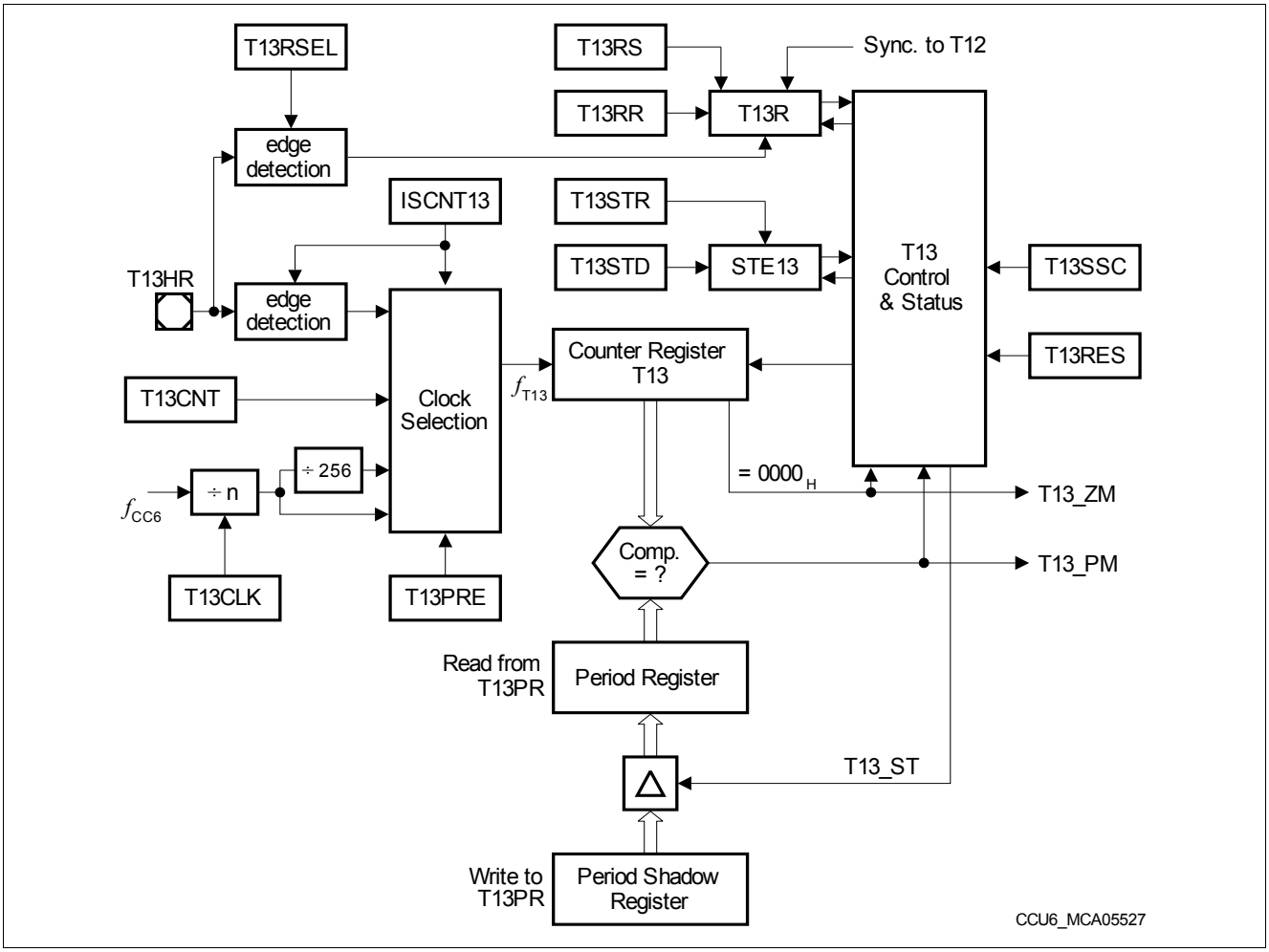

Figure 144 T13 Counter Logic and Period Comparators

The start or stop of T13 is controlled by the Run bit, T13R. This control bit can be set by software via the associated set/clear bits T13RS or T13RR in register TCTR4, or it is cleared by hardware according to preselected conditions (single-shot mode).

The timer T13 run bit T13R must not be set while the applied T13 period value is zero. Bit T13R can be set automatically if an event of T12 is detected to synchronize T13 timings to T12 events, e.g. to generate a programmable delay via T13 after an edge of a T12 compare channel before triggering an AD conversion (T13 can trigger ADC conversions).

Timer T13 can be cleared to 0000_H via control bit T13RES. Setting this write-only bit only clears the timer contents, but has no further effects, e.g., it does not stop the timer.

The generation of the T13 shadow transfer control signal, T13_ST, is enabled via bit STE13. This bit can be set or cleared by software indirectly through its associated set/reset control bits T13STR and T13STD.

Two bit fields, T13TEC and T13TED, control the synchronization of T13 to Timer T12 events. T13TEC selects the trigger event, while T13TED determines for which T12 count direction the trigger should be active.

While Timer T13 is running, write accesses to the count register T13 are not taken into account. If T13 is stopped, write actions to register T13 are immediately taken into account.

Note: The T13 Period Register and its associated shadow register are located at the same physical address. A write access to this address targets the Shadow Register, while a read access reads from the actual period register.

18.4.2 T13 Counting Scheme

This section describes the clocking and the counting capabilities of T13.

18.4.2.1 Clock Selection

In **Timer Mode** (PISEL2. ISCNT13 = 00_B), the input clock f_{T13} of Timer T13 is derived from the internal module clock f_{CC6} through a programmable prescaler and an optional 1/256 divider. The resulting prescaler factors are listed in **Table 289**. The prescaler of T13 is cleared while T13 is not running (TCTR0.T13R = 0) to ensure reproducible timings and delays.

Table 289 Timer T13 Input Clock Options

T13CLK	Resulting Input Clock f_{T13} Prescaler Off (T13PRE = 0)	Resulting Input Clock f_{T13} Prescaler On (T13PRE = 1)
000_B	f_{CC6}	f_{CC6} / 256
001_B	f_{CC6} / 2	f_{CC6} / 512
010_B	f_{CC6} / 4	f_{CC6} / 1024
011_B	f_{CC6} / 8	f_{CC6} / 2048
100_B	f_{CC6} / 16	f_{CC6} / 4096
101_B	f_{CC6} / 32	f_{CC6} / 8192
110_B	f_{CC6} / 64	f_{CC6} / 16384
111_B	f_{CC6} / 128	f_{CC6} / 32768

In **Counter Mode**, timer T13 counts one step:

- If a 1 is written to TCTR4.T13CNT and PISEL2.ISCNT13 = 01_B
- If a rising edge of input signal T13HR is detected and PISEL2.ISCNT13 = 10_B
- If a falling edge of input signal T13HR is detected and PISEL2.ISCNT13 = 11_B

18.4.2.2 T13 Counting

The period of the timer is determined by the value in the period Register T13PR according to the following formula:

$T13_{PER}$ = <Period-Value> + 1; in T13 clocks (f_{T13}) (9)

Timer T13 can only count up, comparable to the Edge-Aligned mode of T12. This leads to very simple ‘counting rule’ for the T13 counter:

- The counter is cleared with the next T13 clock edge if a Period-Match is detected. The counting direction is always upwards.

The behavior of T13 is illustrated in **Figure 145**.

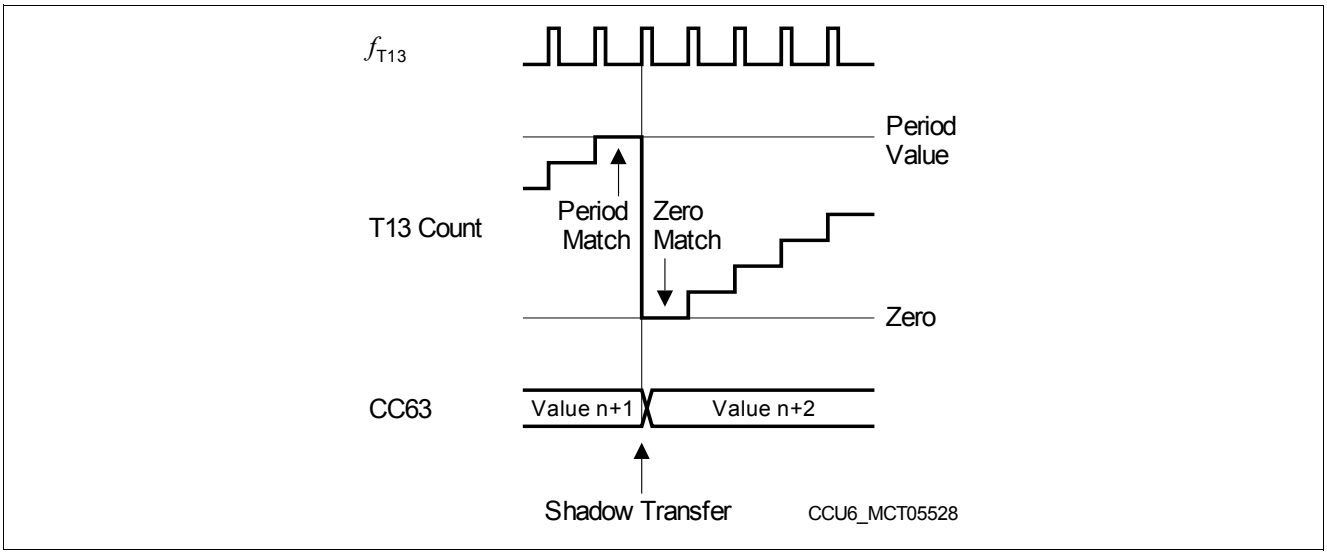

Figure 145 T13 Counting Sequence

18.4.2.3 Single-Shot Mode

In Single-Shot Mode, the timer run bit T13R is cleared by hardware. If bit T13SSC = 1, the timer T13 will stop when the current timer period is finished.

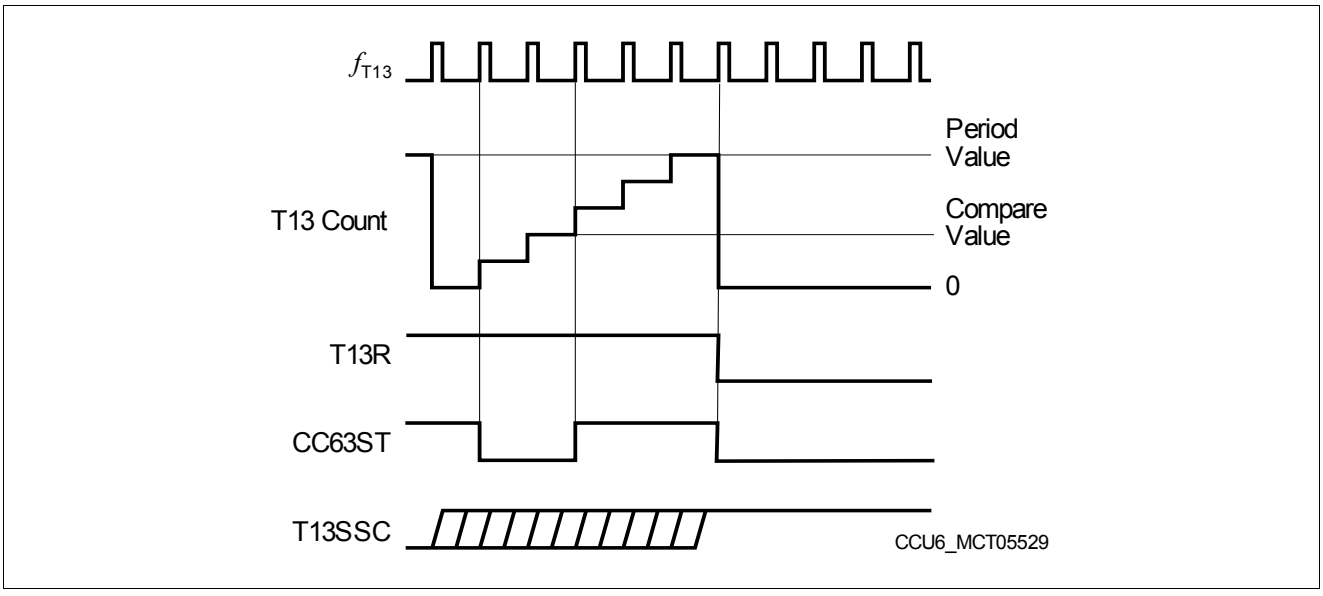

Figure 146 Single-Shot Operation of Timer T13

18.4.2.4 Synchronization to T12

Timer T13 can be synchronized to a T12 event. Bit fields T13TEC and T13TED select the event that is used to start Timer T13. The selected event sets bit T13R via HW, and T13 starts counting. Combined with the Single-Shot mode, this feature can be used to generate a programmable delay after a T12 event.

Figure 147 shows an example for the synchronization of T13 to a T12 event. Here, the selected event is a compare-match (compare value = 2) while counting up. The clocks of T12 and T13 can be different (other prescaler factor); the figure shows an example in which T13 is clocked with half the frequency of T12.

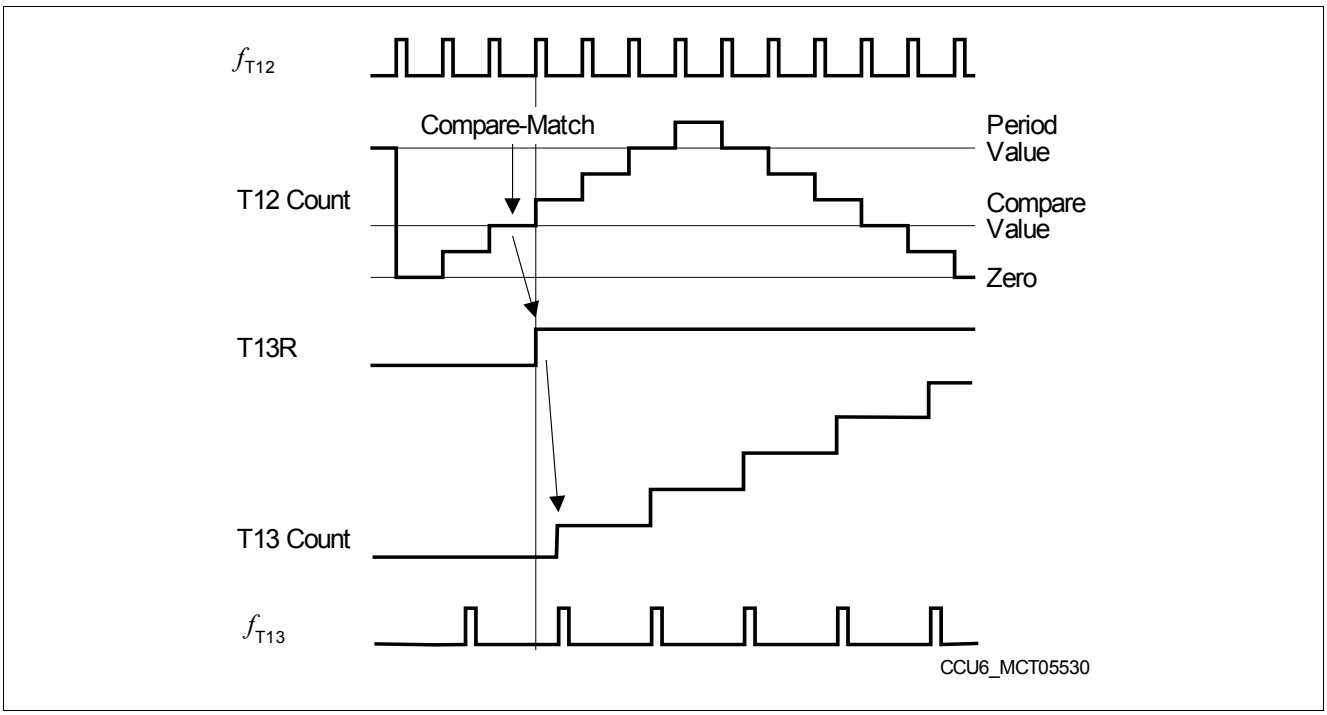

Figure 147 Synchronization of T13 to T12 Compare Match

Bit field T13TEC selects the trigger event to start T13 (automatic set of T13R for synchronization to T12 compare signals) according to the combinations shown in **Table 290**. Bit field T13TED additionally specifies for which count direction of T12 the selected trigger event should be regarded (see **Table 291**).

Table 290 T12 Trigger Event Selection

T13TEC	Selected Event
000_B	None
001_B	T12 Compare Event on Channel 0 (CM_CC60)
010_B	T12 Compare Event on Channel 1 (CM_CC61)
011_B	T12 Compare Event on Channel 2 (CM_CC62)
100_B	T12 Compare Event on any Channel (0, 1, 2)
101_B	T12 Period-Match (T12_PM)
110_B	T12 Zero-Match while counting up (T12_ZM and CDIR = 0)
111_B	Any Hall State Change

Table 291 T12 Trigger Event Additional Specifier

T13TED	Selected Event Specifier
00_B	Reserved, no action
01_B	Selected event is active while T12 is counting up (CDIR = 0)
10_B	Selected event is active while T12 is counting down (CDIR = 1)
11_B	Selected event is active independently of the count direction of T12

18.4.3 T13 Compare Mode

Associated with Timer T13 is one compare channel, that can perform compare operations with regard to the contents of the T13 counter.

Figure 143 gives an overview on the T13 channel in Compare Mode. The channel is connected to the T13 counter register via an equal-to comparator, generating a compare match signal when the contents of the counter matches the contents of the compare register.

The channel consists of the comparator and a double register structure - the actual compare register, CC63R, feeding the comparator, and an associated shadow register, CC63SR, that is preloaded by software and transferred into the compare register when signal T13 shadow transfer, T13_ST, gets active. Providing a shadow register for the compare value as well as for other values related to the generation of the PWM signal facilitates a concurrent update by software for all relevant parameters.

Associated with the channel is a State Bit, CMPSTAT.CC63ST, holding the status of the compare operation. **Figure 148** gives an overview on the logic for the State Bit.

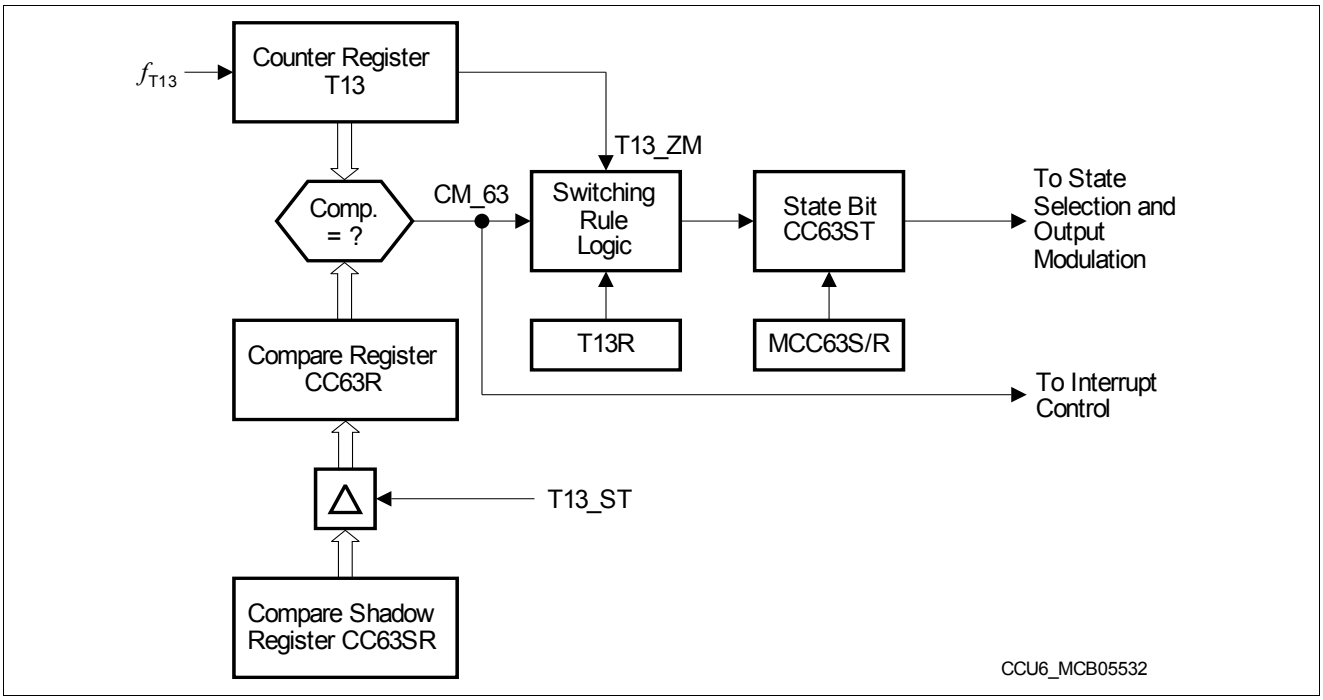

Figure 148 T13 State Bit Block Diagram

A compare interrupt event CM_63 is signaled when a compare match is detected. The actual setting of a State Bit has no influence on the interrupt generation.

The inputs to the switching rule logic for the CC63ST bit are the timer run bit (T13R), the timer zero-match signal (T13_ZM), and the actual individual compare-match signal CM_63. In addition, the state bit can be set or cleared by software via bits MCC63S and MCC63R in register CMPMODIF.

A modification of the State Bit CC63ST by hardware is only possible while Timer T13 is running (T13R = 1). If this is the case, the following switching rules apply for setting and resetting the State Bit in Compare Mode:

State Bit **CC63ST is set** to 1

- with the next T13 clock (f_{T13}) after a compare-match (T13 is always counting up) (i.e., when the counter is incremented above the compare value);
- with the next T13 clock (f_{T13}) after a zero-match AND a parallel compare-match.

State Bit **CC63ST is cleared** to 0

- with the next T13 clock (f_{T13}) after a zero-match AND NO parallel compare-match.

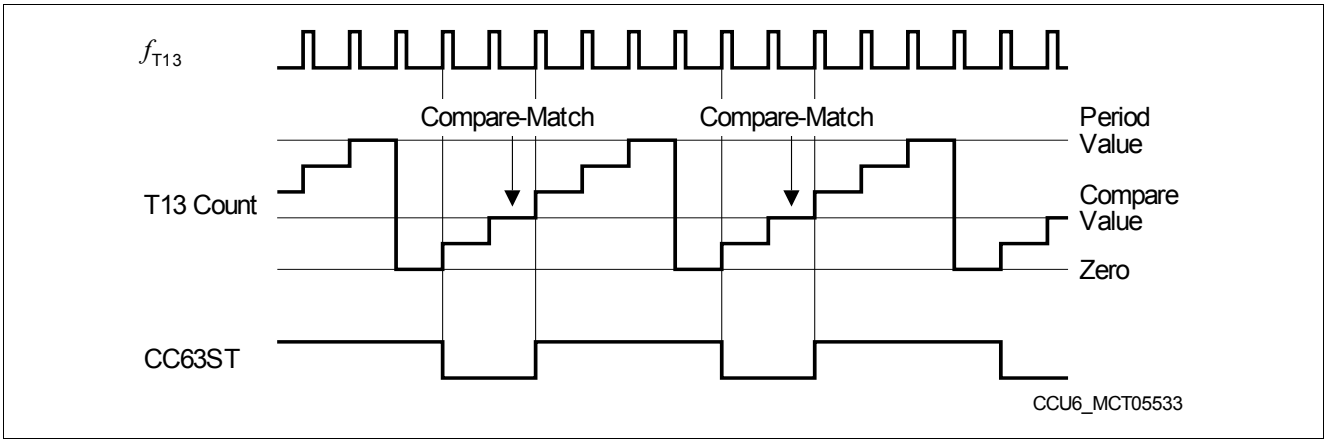

Figure 149 T13 Compare Operation

18.4.4 Compare Mode Output Path

Figure 150 gives an overview on the signal path from the channel State Bit CC63ST to its output pin COUT63. As illustrated, a user can determine the desired output behavior in relation to the current state of CC63ST. Please refer to **Section 18.3.4.3** for detailed information on the output modulation for T12 signals.

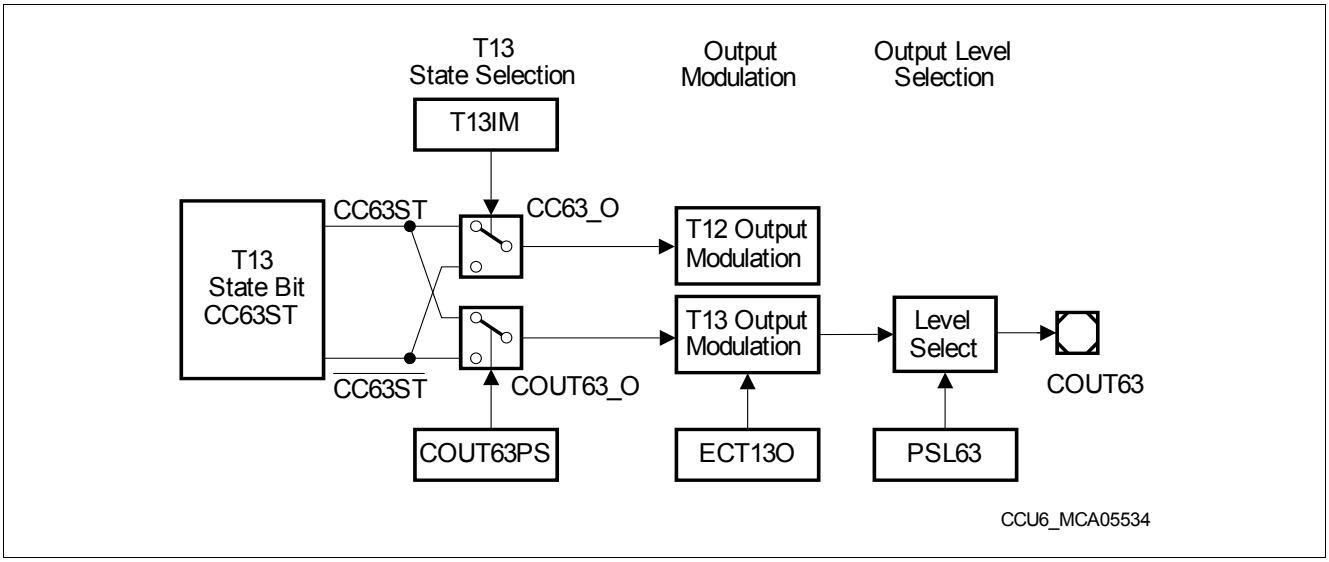

Figure 150 Channel 63 Output Path

The output line COUT63_O can generate a T13 PWM at the output pin COUT63. The signal CC63_O can be used to modulate the T12-related output signals with a T13 PWM. In order to decouple COUT63 from the internal modulation, the compare state leading to an active signal can be selected independently by bits T13IM and COUT63PS.

The last block of the data path is the Output Modulation block. Here, the modulation source T13 and the trap functionality are combined and control the actual level of the output pin COUT63 (see **Figure 151**):

- The **T13 related compare signal** COUT63_O delivered by the T13 state selection with the enable bit MODCTR.ECT13O
- The **trap state** TRPS with an individual enable bit TRPCTR.TRPEN13

If the modulation input signal COUT63_O is enabled (ECT13O = 1) and is at passive state, the modulated is also in passive state. If the modulation input is not enabled, the output is in passive state.

If the Trap State is active (TRPS = 1), then the output enabled for the trap signal (by TRPEN13 = 1) is set to the passive state.

The output of the modulation control block is connected to a level select block. It offers the option to determine the actual output level of a pin, depending on the state of the output line (decoupling of active/passive state and output polarity) as specified by the Passive State Select bit PSLR.PSL63. If the modulated output signal is in the passive state, the level specified directly by PSL63 is output. If it is in the active state, the inverted level of PSL63 is output. This allows the user to adapt the polarity of an active output signal to the connected circuitry.

The PSL63 bit has a shadow register to allow for updates with the T13 shadow transfer signal (T13_ST) without undesired pulses on the output lines. A read action returns the actually used value, whereas a write action targets the shadow bit. Providing a shadow register for the PSL value as well as for other values related to the generation of the PWM signal facilitates a concurrent update by software for all relevant parameters.

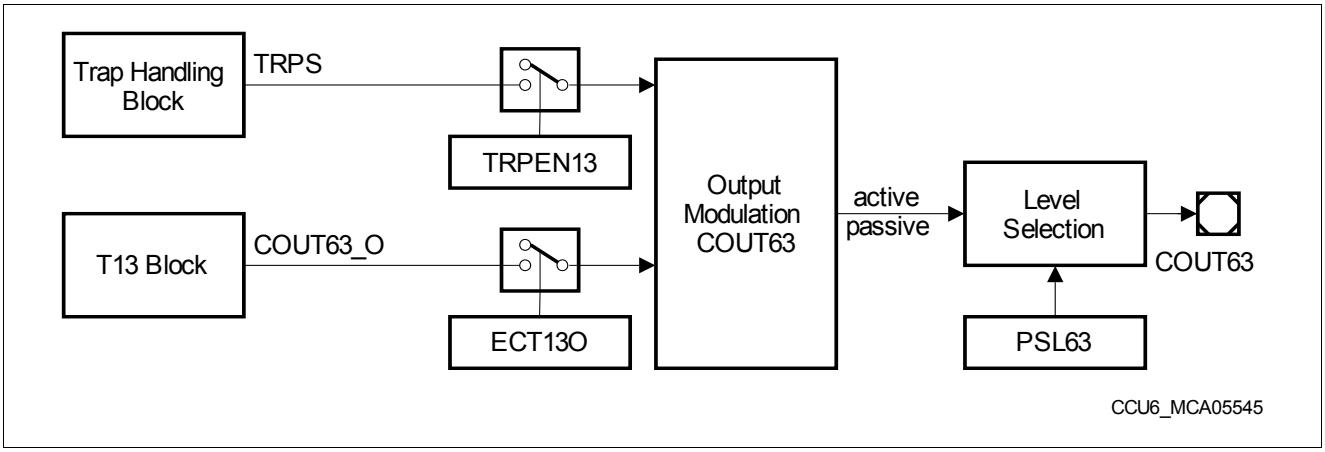

Figure 151 T13 Output Modulation

18.4.5 T13 Shadow Register Transfer

A special shadow transfer signal (T13_ST) can be generated to facilitate updating the period and compare values of the compare channel CC63 synchronously to the operation of T13. Providing a shadow register for values defining one PWM period facilitates a concurrent update by software for all relevant parameters. The next PWM period can run with a new set of parameters. The generation of this signal is requested by software via bit TCTR0.STE13 (set by writing 1 to the write-only bit TCTR4.T13STR, cleared by writing 1 to the write-only bit TCTR4.T13STD).

When signal T13_ST is active, a shadow register transfer is triggered with the next cycle of the T13 clock. Bit STE13 is automatically cleared with the shadow register transfer. A T13 shadow register transfer takes place (T13_ST active):

- while timer T13 is not running (T13R = 0), or
- STE13 = 1 and a Period-Match is detected while T13R = 1

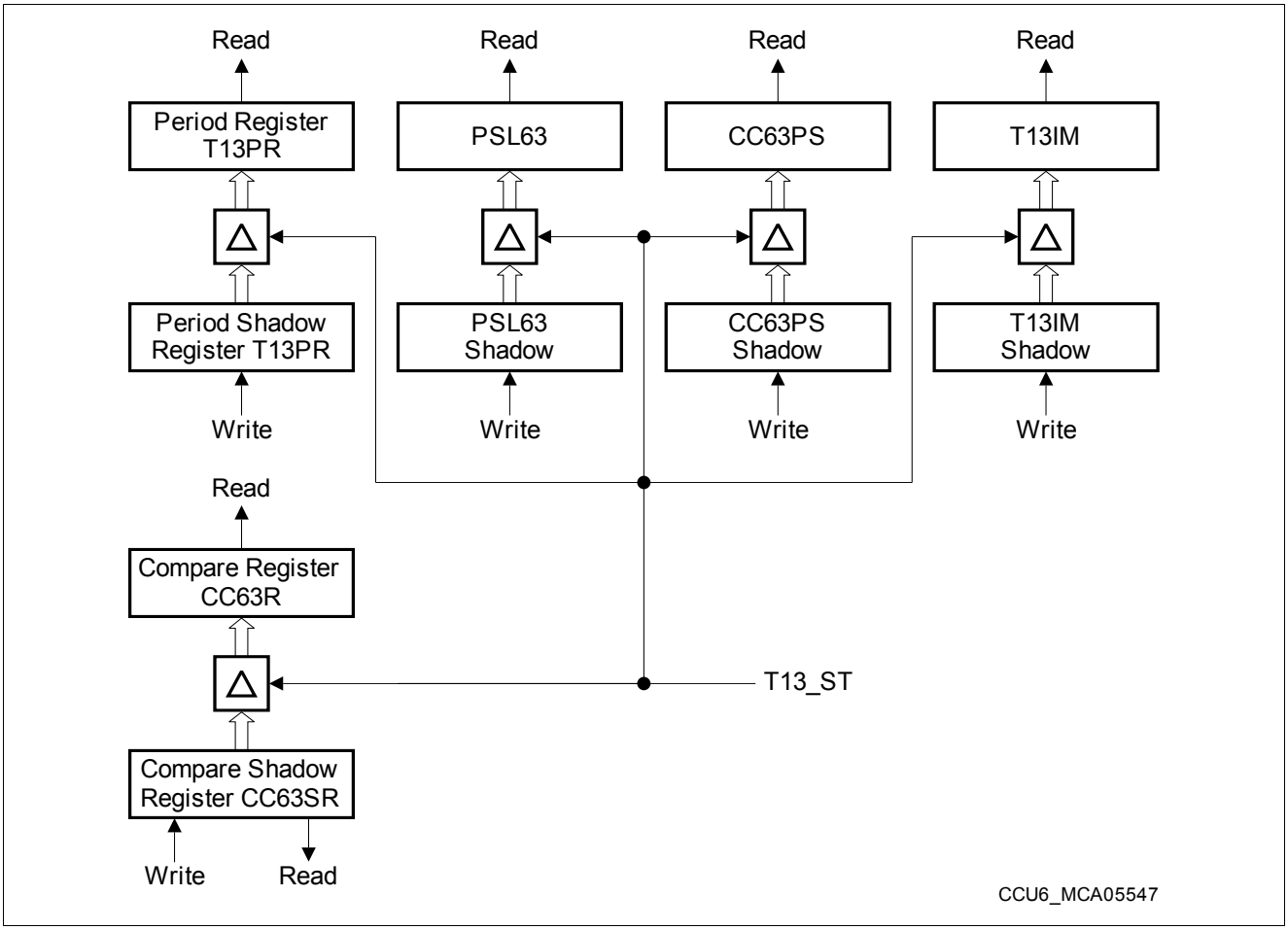

Figure 152 T13 Shadow Register Overview

18.5 Trap Handling

The trap functionality permits the PWM outputs to react on the state of the input signal $\overline{\text{CTRAP}}$. This functionality can be used to switch off the power devices if the trap input becomes active (e.g. to perform an emergency stop). The trap handling and the effect on the output modulation are controlled by the bits in the trap control register TRPCTR. The trap flags TRPF and TRPS are located in register IS and can be set/cleared by SW by writing to registers ISS and ISR.

Figure 153 gives an overview on the trap function.

The Trap Flag TRPF monitors the trap input and initiates the entry into the Trap State. The Trap State Bit TRPS determines the effect on the outputs and controls the exit of the Trap State.

When a trap condition is detected ($\overline{\text{CTRAP}}$ = 0) and the input is enabled (TRPPEN = 1), both, the Trap Flag TRPF and the Trap State Bit TRPS, are set to 1 (trap state active). The output of the Trap State Bit TRPS leads to the Output Modulation Blocks (for T12 and for T13) and can there deactivate the outputs (set them to the passive state). Individual enable control bits for each of the six T12-related outputs and the T13-related output facilitate a flexible adaptation to the application needs.

There are a number of different ways to exit the Trap State. This offers SW the option to select the best operation for the application. Exiting the Trap State can be done either immediately when the trap condition is removed ($\overline{\text{CTRAP}}$ = 1 or TRPPEN = 0), or under software control, or synchronously to the PWM generated by either Timer T12 or Timer T13.

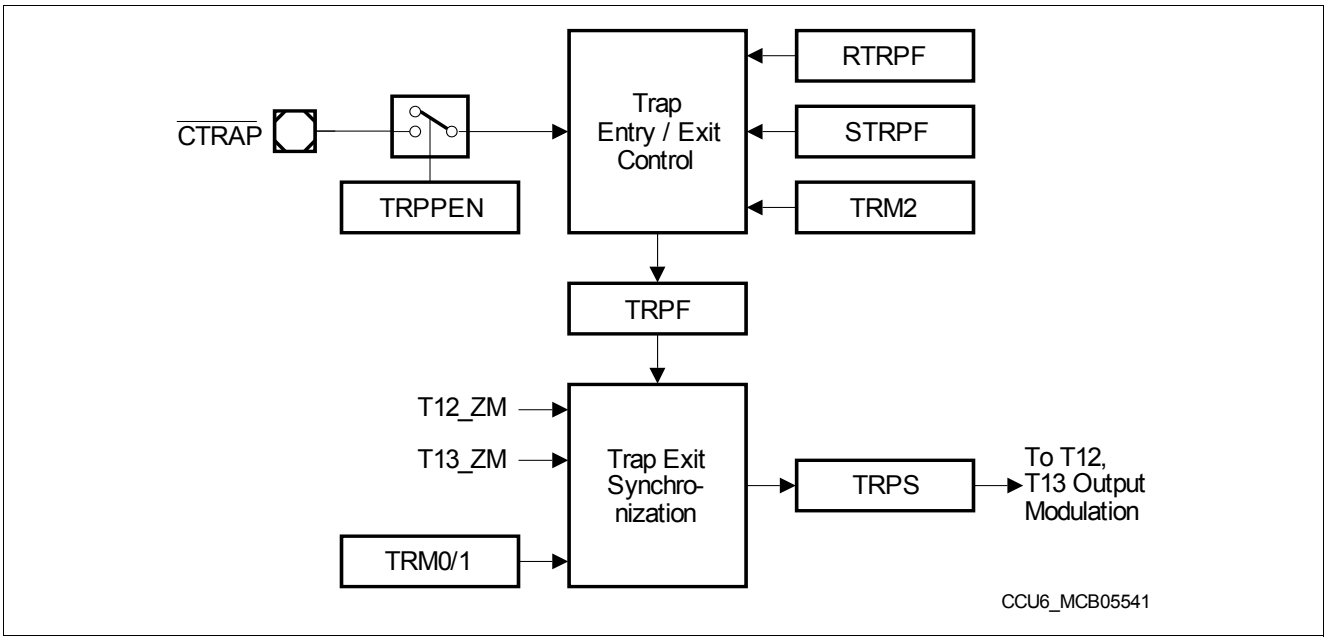

Figure 153 Trap Logic Block Diagram

Clearing of TRPF is controlled by the mode control bit TRPM2. If TRPM2 = 0, TRPF is automatically cleared by HW when $\overline{\text{CTRAP}}$ returns to the inactive level ($\overline{\text{CTRAP}}$ = 1) or if the trap input is disabled (TRPPEN = 0). When TRPM2 = 1, TRPF must be reset by SW after $\overline{\text{CTRAP}}$ has become inactive.

Clearing of TRPS is controlled by the mode control bits TRPM1 and TRPM0 (located in the Trap Control Register TRPCTR). A reset of TRPS terminates the Trap State and returns to normal operation. There are three options selected by TRPM1 and TRPM0. One is that the Trap State is left immediately when the Trap Flag TRPF is cleared, without any synchronization to timers T12 or T13. The other two options facilitate the synchronization of the termination of the Trap State to the count periods of either Timer T12 or Timer T13. **Figure 154** gives an overview on the associated operation.

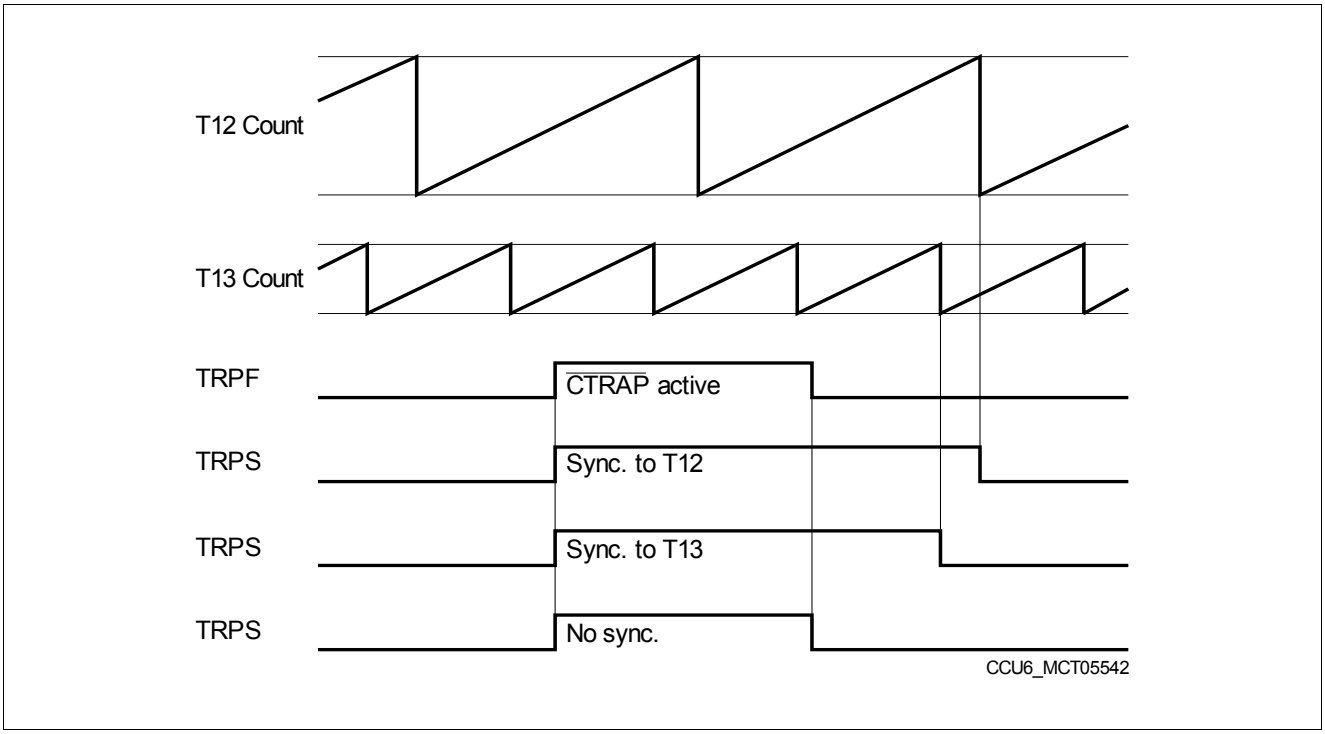

Figure 154 Trap State Synchronization (with TRM2 = 0)

18.6 Multi-Channel Mode

The Multi-Channel mode offers the possibility to modulate all six T12-related output signals with one instruction. The bits in bit field MCMOUT.MCMP are used to specify the outputs that may become active. If Multi-Channel mode is enabled (bit MODCTR.MCMEN = 1), only those outputs may become active, that have a 1 at the corresponding bit position in bit field MCMP.

This bit field has its own shadow bit field MCMOUTS.MCMPS, that can be written by software. The transfer of the new value in MCMPS to the bit field MCMP can be triggered by, and synchronized to, T12 or T13 events. This structure permits the software to write the new value, that is then taken into account by the hardware at a well-defined moment and synchronized to a PWM signal. This avoids unintended pulses due to unsynchronized modulation sources.

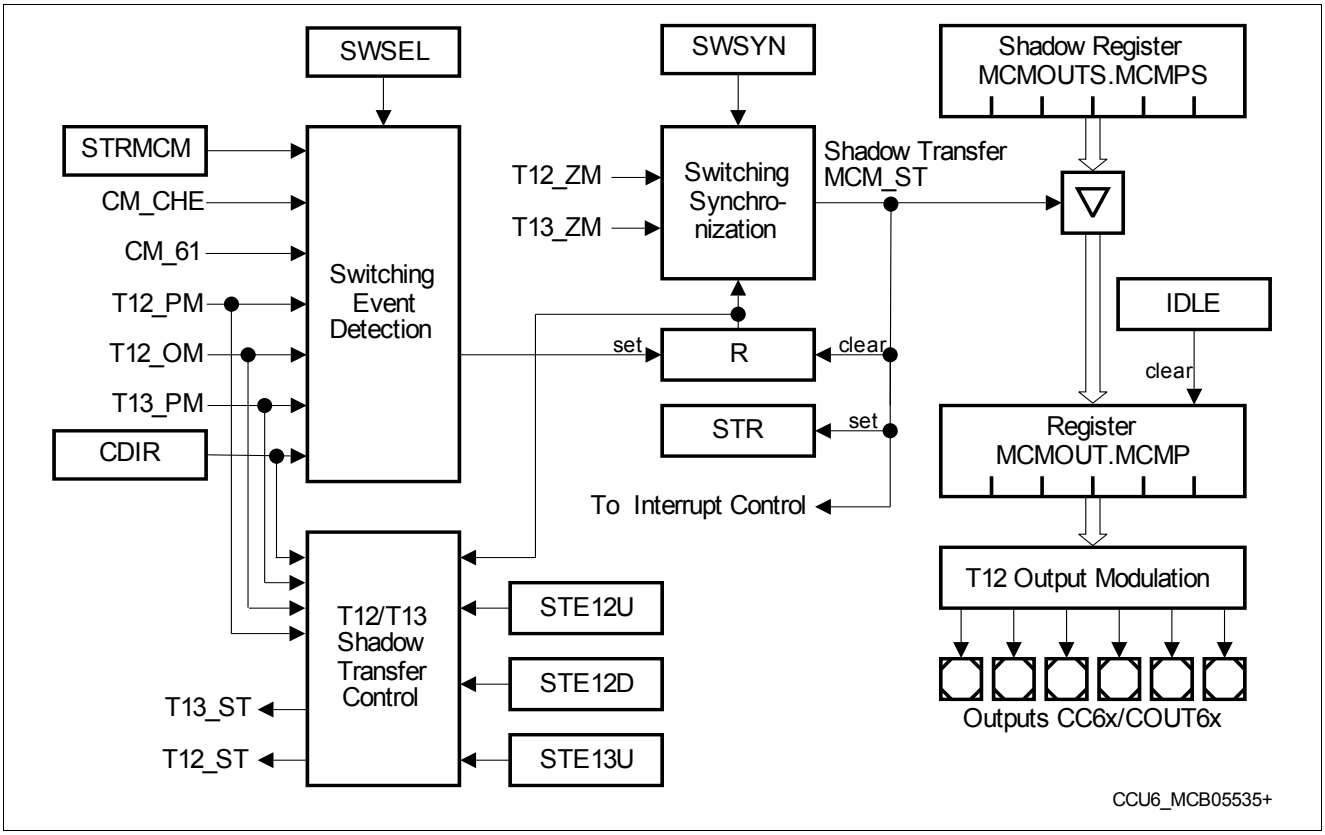

Figure 155 Multi-Channel Mode Block Diagram

Figure 155 shows the functional blocks for the Multi-Channel operation, controlled by bit fields in register MCMCTR. The event that triggers the update of bit field MCMP is chosen by SWSEL. In order to synchronize the update of MCMP to a PWM generated by T12 or T13, bit field SWSYN allows the selection of the synchronization event leading to the transfer from MCMPS to MCMP. Due to this structure, an update takes place with a new PWM period. A reminder flag R is set when the selected switching event occurs (the event is not necessarily synchronous to the modulating PWM), and is cleared when the transfer takes place. This flag can be monitored by software to check for the status of this logic block. If the shadow transfer from MCMPS to MCMP takes place, bit IS.STR becomes set and an interrupt can be generated.

In addition to the Multi-Channel shadow transfer event MCM_ST, the shadow transfers for T12 (T12_ST) and T13 (T13_ST) can be generated to allow concurrent updates of applied duty cycles for T12 and/or T13 modulation and Multi-Channel patterns.

If it is explicitly desired, the update takes place immediately with the occurrence of the selected event when the direct synchronization mode is selected. The update can also be requested by software by writing to bit field

MCMPS with the shadow transfer request bit STRMCM = 1. The option to trigger an update by SW is possible for all settings of SWSEL.

By using the direct mode and bit STRMCM = 1, the update takes place completely under software control.

Table 292 Multi-Channel Mode Switching Event Selection

SWSEL	Selected Event (see register MCMCTR)
000_B	No automatic event detection
001_B	Correct Hall Event (CM_CHE) detected at input signals CCPOSx without additional delay
010_B	T13 Period-Match (T13_PM)
011_B	T12 One-Match while counting down (T12_OM and CDIR = 1)
100_B	T12 Compare Channel 1 Event while counting up (CM_61 and CDIR = 0) to support the phase delay function by CC61 for block commutation mode.
101_B	T12 Period-Match while counting up (T12_PM and CDIR = 0)
110_B, 111_B	Reserved, no action

Table 293 Multi-Channel Mode Switching Synchronization

SWSYN	Synchronization Event (see register MCMCTR)
00_B	Direct Mode: the trigger event directly causes the shadow transfer
01_B	T13 Zero-Match (T13_ZM), the MCM shadow transfer is synchronized to a T13 PWM
10_B	T12 Zero-Match (T12_ZM), the MCM shadow transfer is synchronized to a T12 PWM
11_B	Reserved, no action

18.7 Hall Sensor Mode

For Brushless DC-Motors in block commutation mode, the Multi-Channel Mode has been introduced to provide efficient means for switching pattern generation. These patterns need to be output in relation to the angular position of the motor. For this, usually Hall sensors or Back-EMF sensing are used to determine the angular rotor position. The CCU6 provides three inputs, CCPOS0, CCPOS1, and CCPOS2, that can be used as inputs for the Hall sensors or the Back-EMF detection signals.

There is a strong correlation between the motor position and the output modulation pattern. When a certain position of the motor has been reached, indicated by the sampled Hall sensor inputs (the Hall pattern), the next, pre-determined Multi-Channel Modulation pattern has to be output. Because of different machine types, the modulation pattern for driving the motor can vary. Therefore, it is wishful to have a wide flexibility in defining the correlation between the Hall pattern and the corresponding Modulation pattern. Furthermore, a hardware mechanism significantly reduces the CPU for block-commutation.

The CCU6 offers the flexibility by having a register containing the currently assumed Hall pattern (CURH), the next expected Hall pattern (EXPH) and the corresponding output pattern (MCMP). A new Modulation pattern is output when the sampled Hall inputs match the expected ones (EXPH). To detect the next rotation phase (segment for block commutation), the CCU6 monitors the Hall inputs for changes. When the next expected Hall pattern is detected, the next corresponding Modulation pattern is output.

To increase for noise immunity (to a certain extend), the CCU6 offers the possibility to introduce a sampling delay for the Hall inputs. Some changes of the Hall inputs are not leading to the expected Hall pattern, because they are only short spikes due to noise. The Hall pattern compare logic compares the Hall inputs to the next expected pattern and also to the currently assumed pattern to filter out spikes.

For the Hall and Modulation output patterns, a double-register structure is implemented. While register MCMOUT holds the actually used values, its shadow register MCMOUTS can be loaded by software from a pre-defined table, holding the appropriate Hall and Modulation patterns for the given motor control.

A transfer from the shadow register into register MCMOUT can take place when a correct Hall pattern change is detected. Software can then load the next values into register MCMOUTS. It is also possible by software to force a transfer from MCMOUTS into MCMOUT.

Note: The Hall input signals CCPOSx and the CURH and EXPH bit fields are arranged in the following order:
CCPOS0 corresponds to CURH.0 (LSB) and EXPH.0 (LSB)
CCPOS1 corresponds to CURH.1 and EXPH.1
CCPOS2 corresponds to CURH.2 (MSB) and EXPH.2 (MSB)

18.7.1 Hall Pattern Evaluation

The Hall sensor inputs CCPOSx can be permanently monitored via an edge detection block (with the module clock f_{CC6}). In order to suppress spikes on the Hall inputs due to noise in rugged inverter environment, two optional noise filtering methods are supported by the Hall logic (both methods can be combined).

- Noise filtering with delay:
  For this function, the mode control bit fields MSEL6x for all T12 compare channels must be programmed to 1000_B and DBYP = 0. The selected event triggers Dead-Time Counter 0 to generate a programmable delay (defined by bit field DTM). When the delay has elapsed, the evaluation signal HCRDY becomes activated. Output modulation with T12 PWM signals is not possible in this mode.
- Noise filtering by synchronization to PWM:
  The Hall inputs are not permanently monitored by the edge detection block, but samples are taken only at defined points in time during a PWM period. This can be used to sample the Hall inputs when the switching noise (due to PWM) does not disturb the Hall input signals.

If neither the delay function of Dead-Time Counter 0 is not used for the Hall pattern evaluation nor the Hall mode for Brushless DC-Drive control is enabled, the timer T12 block is available for PWM generation and output modulation.

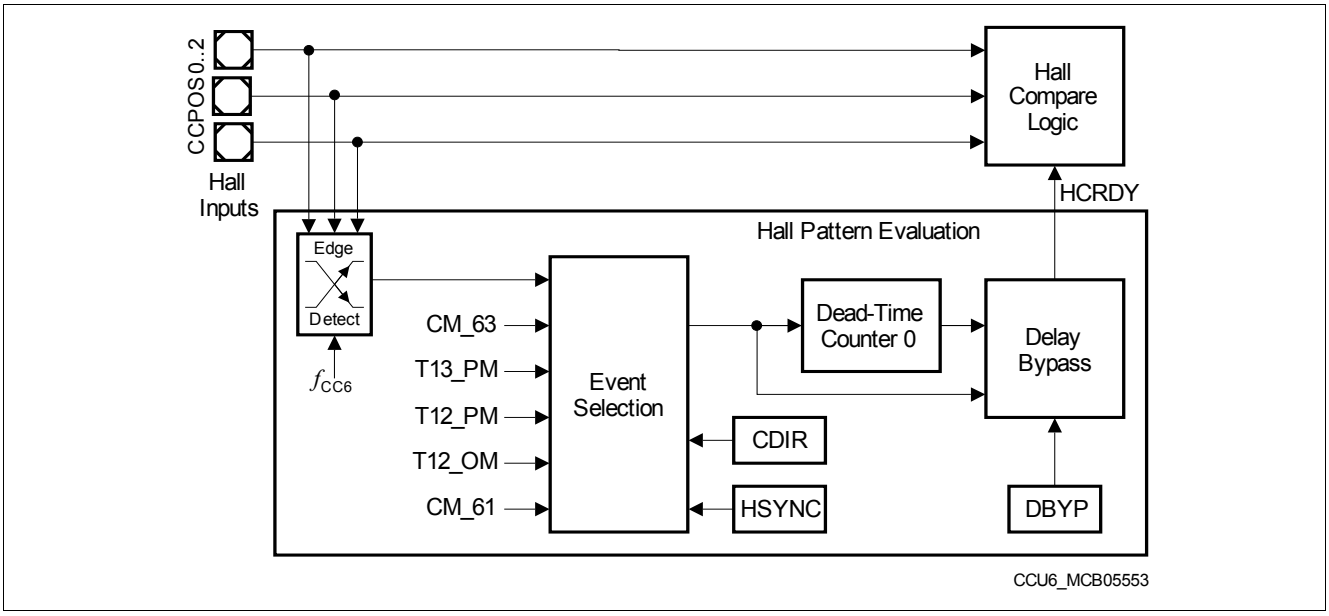

Figure 156 Hall Pattern Evaluation

If the evaluation signal HCRDY (Hall Compare Ready, see **Figure 157**) becomes activated, the Hall inputs are sampled and the Hall compare logic starts the evaluation of the Hall inputs.

Figure 156 illustrates the events for Hall pattern evaluation and the noise filter logic, **Table 294** summarizes the selectable trigger input signals.

Table 294 Hall Sensor Mode Trigger Event Selection

HSYNC	Selected Event (see register T12MSEL)
000_B	Any edge at any of the inputs CCPOSx, independent from any PWM signal (permanent check).
001_B	A T13 Compare-Match (CM_63).
010_B	A T13 Period-Match (T13_PM).
011_B	Hall sampling triggered by HW sources is switched off.

Table 294 Hall Sensor Mode Trigger Event Selection (cont'd)

HSYNC	Selected Event (see register T12MSEL)
100_B	A T12 Period-Match while counting up (T12_PM and CDIR = 0).
101_B	A T12 One-Match while counting down (T12_OM and CDIR = 1).
110_B	A T12 Compare-Match of compare channel CC61 while counting up (CM_61 and CDIR = 0).
111_B	A T12 Compare-Match of compare channel CC61 while counting down (CM_61 and CDIR = 1).

18.7.2 Hall Pattern Compare Logic

Figure 157 gives an overview on the double-register structure and the pattern compare logic. Software writes the next modulation pattern (MCMPS) and the corresponding current (CURHS) and expected (EXPHS) Hall patterns into the shadow register MCMOUTS. Register MCMOUT holds the actually used values CURH and EXPH. The modulation pattern MCMP is provided to the T12 Output Modulation block. The current (CURH) and expected (EXPH) Hall patterns are compared to the sampled Hall sensor inputs (visible in register CMPSTAT). Sampling of the inputs and the evaluation of the comparator outputs is triggered by the evaluation signal HCRDY (Hall Compare Ready), that is detailed in the next section.

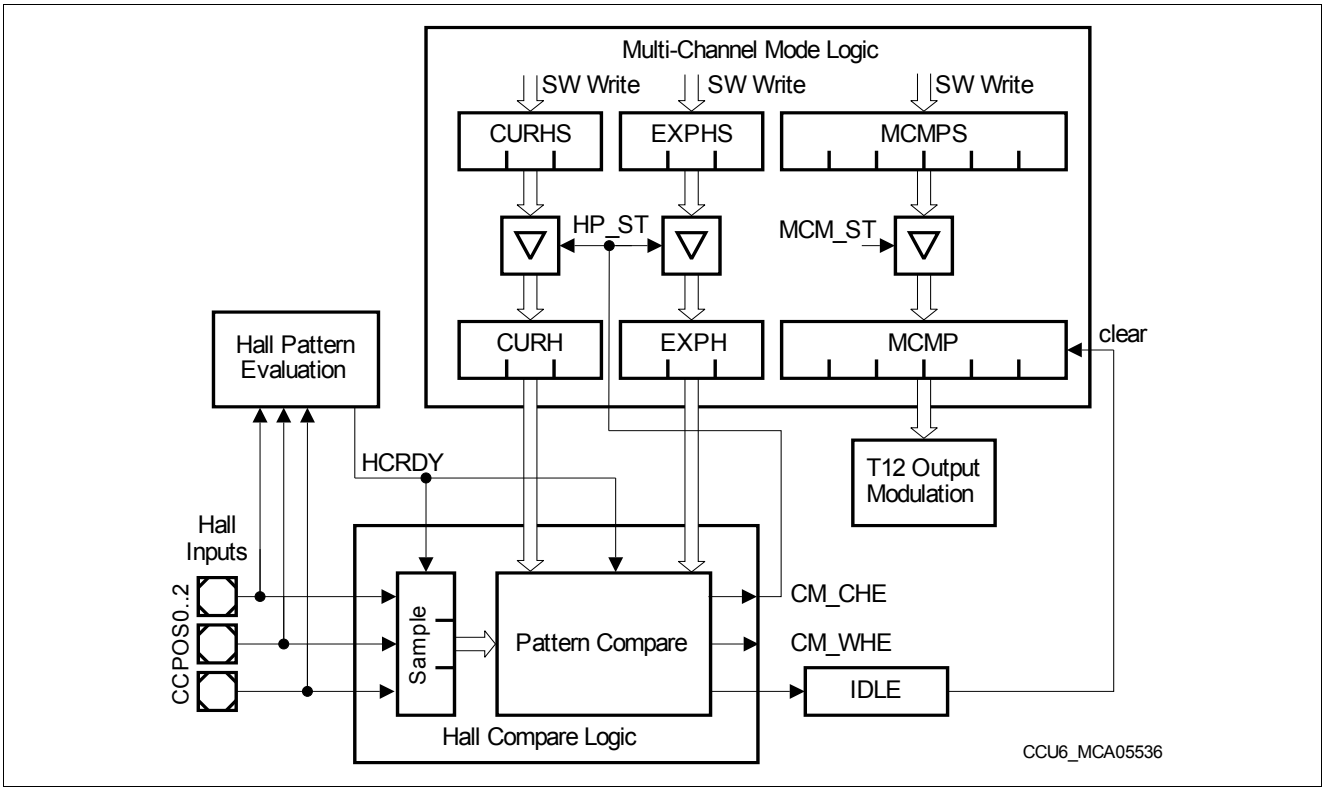

Figure 157 Hall Pattern Compare Logic

- If the sampled Hall pattern matches the value programmed in CURH, the detected transition was a spike (no Hall event) and no further actions are necessary.
- If the sampled Hall pattern matches the value programmed in EXPH, the detected transition was the expected event (correct Hall event CM_CHE) and the MCMP value has to change.
- If the sampled Hall pattern matches neither CURH nor EXPH, the transition was due to a major error (wrong Hall event CM_CWE) and can lead to an emergency shut down (IDLE).

At every correct Hall event (CM_CHE), the next Hall patterns are transferred from the shadow register MCMOUTS into MCMOUT (Hall pattern shadow transfer HP_ST), and a new Hall pattern with its corresponding output pattern can be loaded (e.g. from a predefined table in memory) by software into MCMOUTS. For the Modulation patterns, signal MCM_ST is used to trigger the transfer.

Loading this shadow register can also be done by writing MCMOUTS.STRHP = 1 (for EXPH and CURH) or MCMOUTS.STRMCMP = 1 (for MCMP).

18.7.3 Hall Mode Flags

Depending on the Hall pattern compare operation, a number of flags are set in order to indicate the status of the module and to trigger further actions and interrupt requests.

Flag IS.CHE (Correct Hall Event) is set by signal CM_CHE when the sampled Hall pattern matches the expected one (EXPH). This flag can also be set by SW by setting bit ISS.SCHE = 1. If enabled by bit IEN.ENCHE = 1, the set signal for CHE can also generate an interrupt request to the CPU. Bit field INP.INPCHE defines which service request output becomes activated in case of an interrupt request.To clear flag CHE, SW needs to write ISR.RCHE = 1.

Flag IS.WHE indicates a Wrong Hall Event. Its handling for flag setting and resetting as well as interrupt request generation are similar to the mechanism for flag CHE.

The implementation of flag STR is done in the same way as for CHE and WHE. This flag is set by HW by the shadow transfer signal MCM_ST (see also **Figure 155**).

Please note that for flags CHE, WHE, and STR, the interrupt request generation is triggered by the set signal for the flag. That means, a request can be generated even if the flag is already set. There is no need to clear the flag in order to enable further interrupt requests.

The implementation for the IDLE flag is different. It is set by HW through signal CM_WHE if enabled by bit ENIDLE. Software can also set the flag via bit SIDLE. As long as bit IDLE is set, the modulation pattern field MCMP is cleared to force the outputs to the passive state. Flag IDLE must be cleared by software by writing RIDLE = 1 in order to return to normal operation. To fully restart from IDLE mode, the transfer requests for the bit fields in register MCMOUTS to register MCMOUT have to be initiated by software via bits STRMCM and STRHP in register MCMOUTS. In this way, the release from IDLE mode is under software control, but can be performed synchronously to the PWM signal.

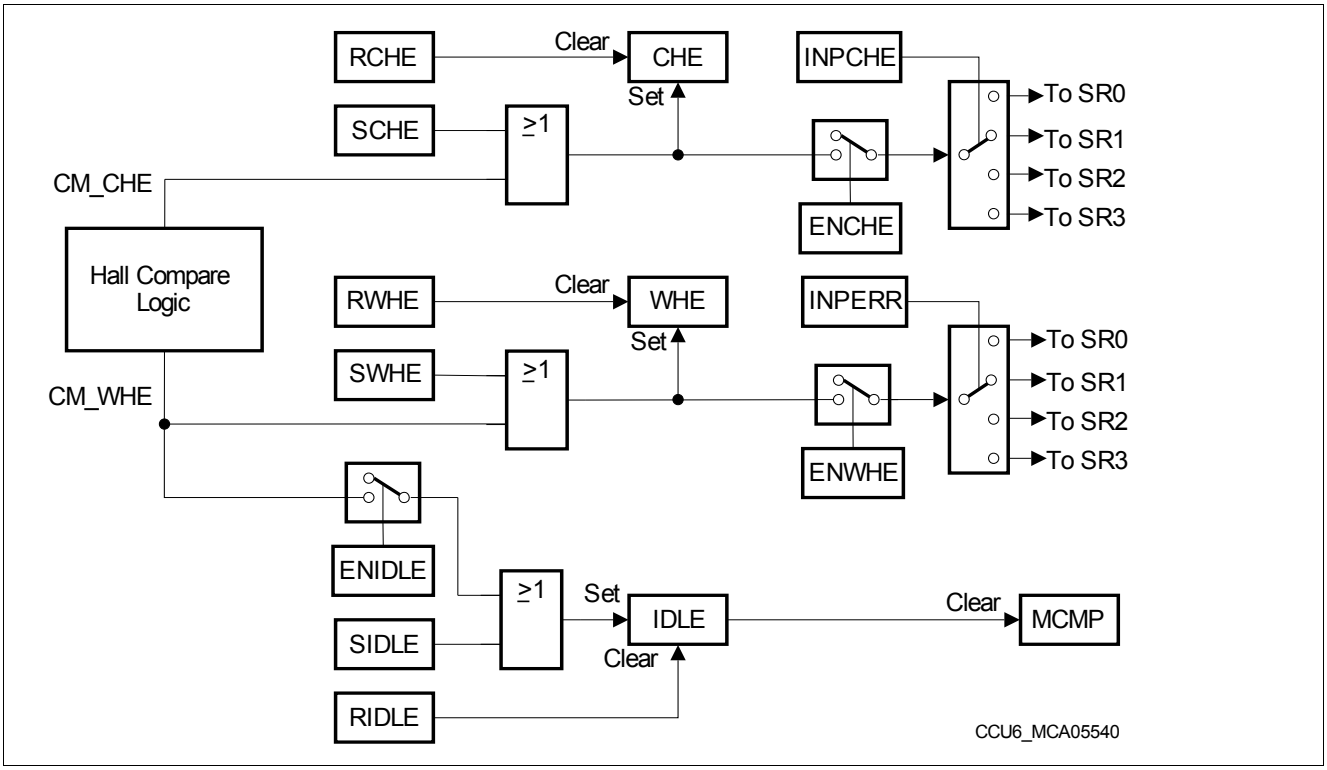

Figure 158 Hall Mode Flags

18.7.4 Hall Mode for Brushless DC-Motor Control

The CCU6 provides a mode for the Timer T12 Block especially targeted for convenient control of block commutation patterns for Brushless DC-Motors. This mode is selected by setting all T12MSEL.MSEL6x bit fields of the three T12 Channels to 1000_B.

In this mode, illustrated in **Figure 159**, channel CC60 is placed in capture mode to measure the time elapsed between the last two correct Hall events, channel CC61 in compare mode to provide a programmable phase delay between the Hall event and the application of a new PWM output pattern, and channel CC62 also in compare mode as first time-out criterion. A second time-out criterion can be built by the T12 period match event.

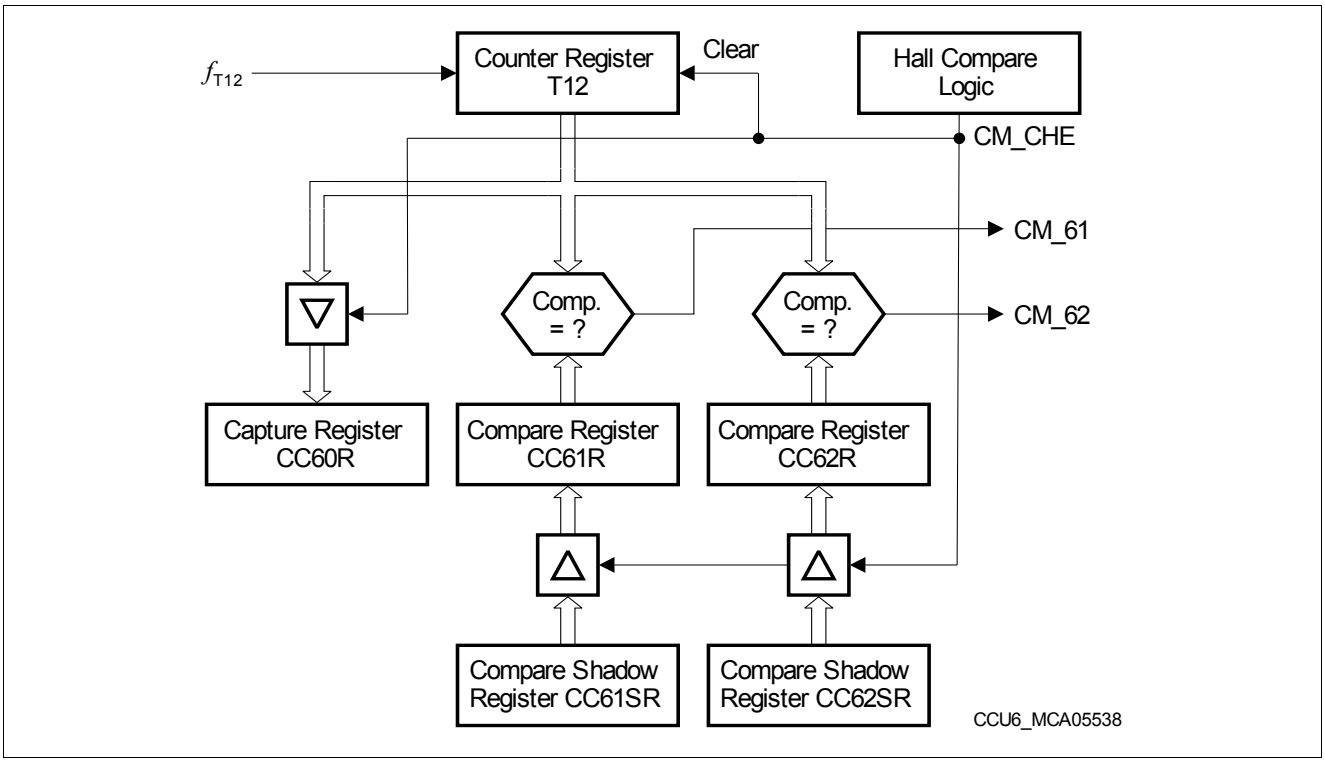

Figure 159 T12 Block in Hall Sensor Mode

The signal CM_CHE from the Hall compare logic is used to transfer the new compare values from the shadow registers CC6xSR into the actual compare registers CC6xR, performs the shadow transfer for the T12 period register, to capture the current T12 contents into register CC60R, and to clear T12.

Note: In this mode, the shadow transfer signal T12_ST is not generated. Not all shadow bits, such as the PSLy bits, will be transferred to their main registers. To program the main registers, SW needs to write to these registers while Timer T12 is stopped. In this case, a SW write actualizes both registers.

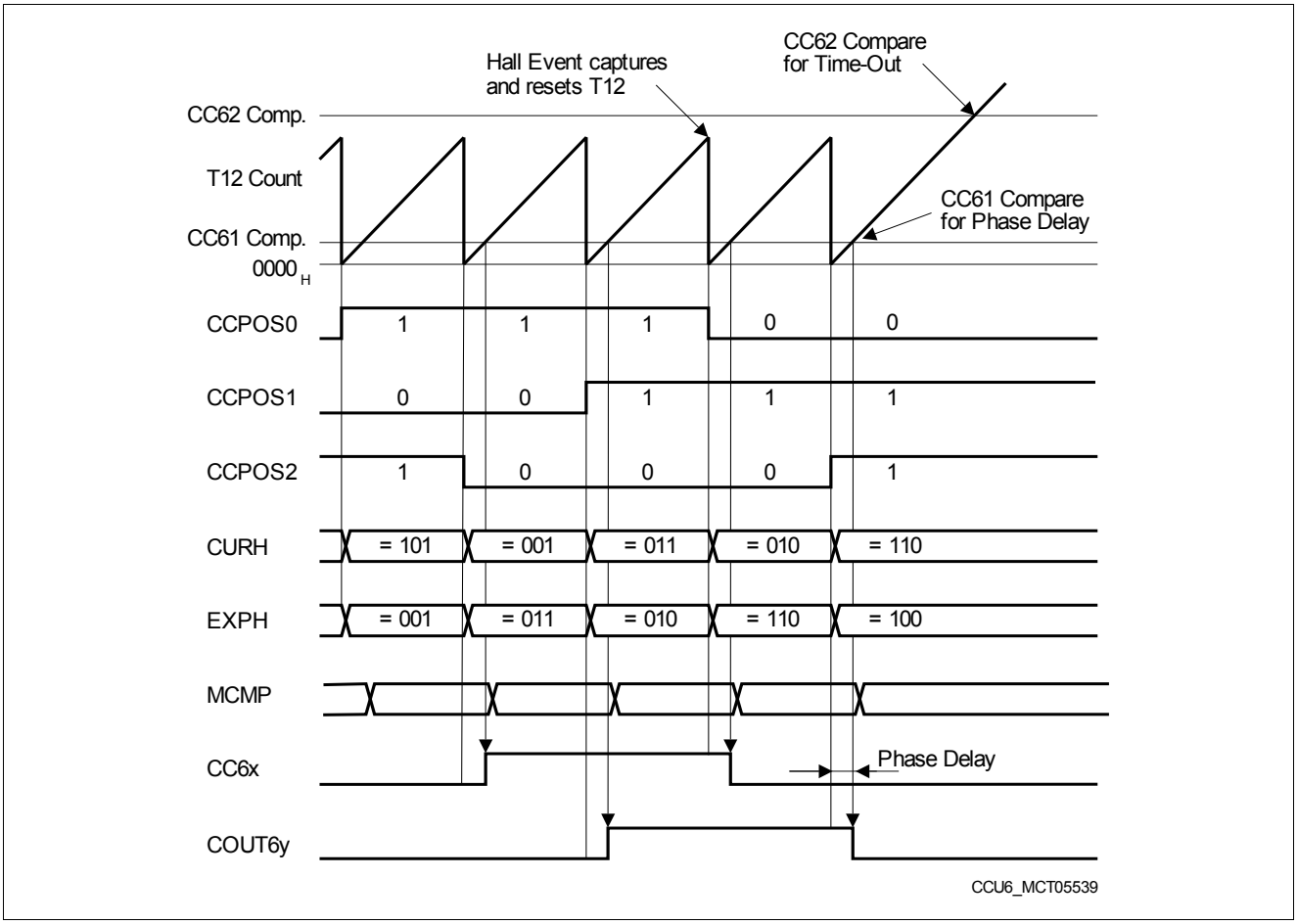

Figure 160 Brushless DC-Motor Control Example (all MSEL6x = 1000_B)

After the detection of an expected Hall pattern (CM_CHE active), the T12 count value is captured into channel CC60 (representing the actual rotor speed by measuring the elapsed time between the last two correct Hall events), and T12 is reset. When the timer reaches the compare value in channel CC61, the next multi-channel state is switched by triggering the shadow transfer of bit field MCMP (if enabled in bit field **SWEN**). This trigger event can be combined with the synchronization of the next multi-channel state to the PWM source (to avoid spikes on the output lines, see **Section 18.6**). This compare function of channel CC61 can be used as a phase delay from the position sensor input signals to the switching of the output signals, that is necessary if a sensorless back-EMF technique or Hall sensors are used. The compare value in channel CC62 can be used as a time-out trigger (interrupt), indicating that the actual motor speed is far below the desired destination value. An abnormal load change can be detected with this feature and PWM generation can be disabled.

18.8 Interrupt Handling

This section describes the interrupt handling of the CCU6 module.

18.8.1 Interrupt Structure

The HW interrupt event or the SW setting of the corresponding interrupt set bit (in register ISS) sets the event indication flags (in register IS) and can trigger the interrupt generation. The interrupt pulse is generated independently from the interrupt status flag in register IS (it is not necessary to clear the related status bit to be able to generate another interrupt). The interrupt flag can be cleared by SW by writing to the corresponding bit in register ISR.

If enabled by the related interrupt enable bit in register IEN, an interrupt pulse can be generated on one of the four service request outputs (SR0 to SR3) of the module. If more than one interrupt source is connected to the same interrupt node pointer (in register INP), the requests are logically OR-combined to one common service request output (see **Figure 161**).

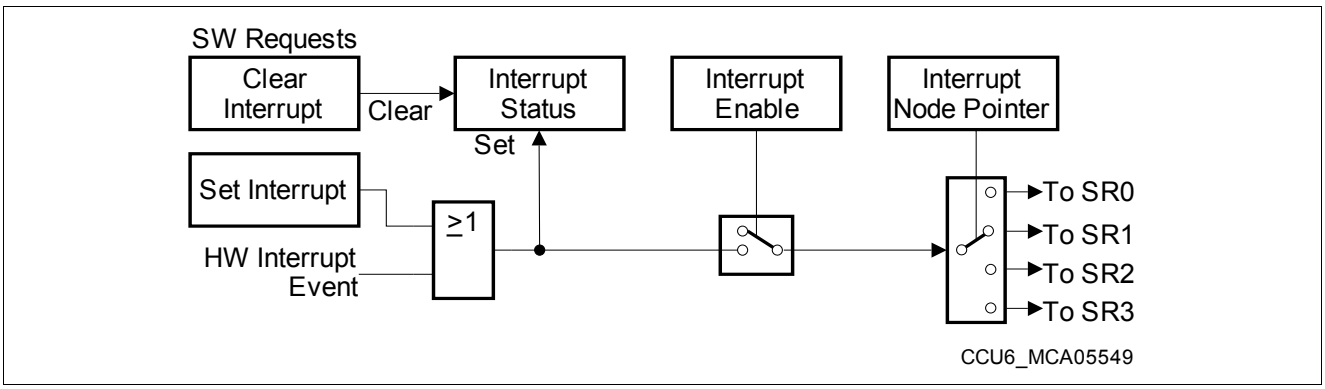

Figure 161 General Interrupt Structure

The available interrupt events in the CCU6 are shown in **Figure 162**.

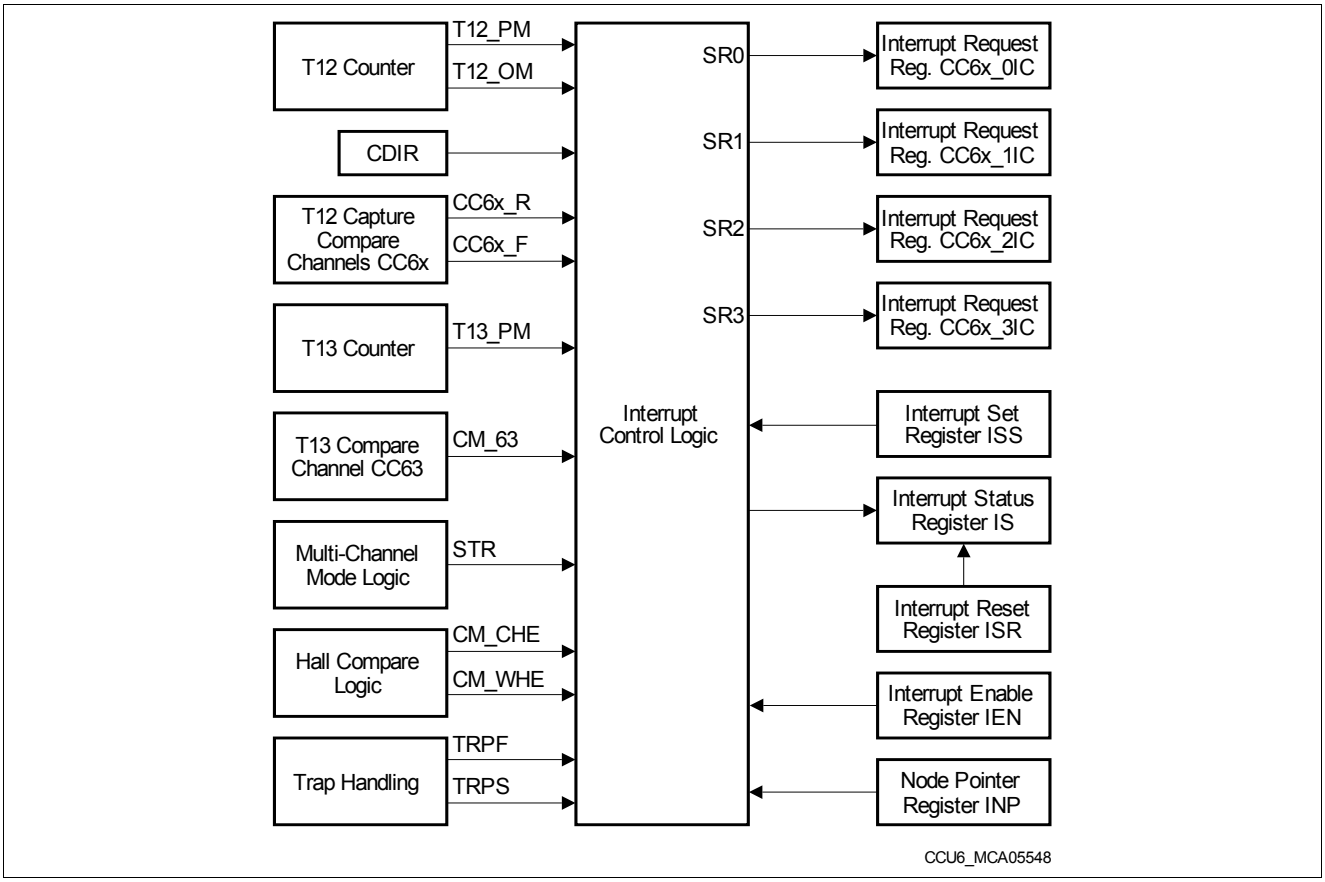

Figure 162 Interrupt Sources and Events

18.9 General Module Operation

This section provides information about the:

- Input selection (see **Section 18.9.1**)

18.9.1 Input Selection

Each CCU6 input signal can be selected from a vector of four or eight possible inputs by programming the port input select registers PISEL0 and PISEL2. This permits to adapt the pin functionality of the device to the application requirements.

The output pins for the module output signals are chosen in the ports.

Note: All functional inputs of the CCU6 are synchronized to f_{CC6} before they affect the module internal logic. The resulting delay of $2/f_{CC6}$ and for asynchronous signals an additional uncertainty of $1/f_{CC6}$ have to be taken into account for precise timing calculation. An edge of an input signal can only be correctly detected if the high phase and the low phase of the input signal are both longer than $1/f_{CC6}$.

18.10 CCU6 Register Description

All CCU6 kernel register names described in this section will be referenced in other parts of this specification with the module name prefix “CCU6_”.

Table 296 lists the CCU6 registers.

Note: If a hardware and a software request to modify a bit occur simultaneously, the software wins.

Table 295 Register Address Space

Module	Base Address	End Address	Note
CCU6	$4000C000_H$	$4000FFFF_H$	CCU6

Table 296 Register Overview

Register Short Name	Register Long Name	Offset Address	Reset Value
CCU6 Register Description, System Registers			
CCU6_PISEL0	Port Input Select Register 0	$6C_H$	0000_H
CCU6_PISEL2	Port Input Select Register 2	74_H	0000_H
CCU6 Register Description, Timer 12 – Related Registers			
CCU6_CC60SR	Capture/Compare Shadow Register for Channel CC60	14_H	0000_H
CCU6_CC61SR	Capture/Compare Shadow Register for Channel CC61	18_H	0000_H
CCU6_CC62SR	Capture/Compare Shadow Register for Channel CC62	$1C_H$	0000_H
CCU6_T12PR	Timer T12 Period Register	24_H	0000_H
CCU6_T12DTC	Dead-Time Control Register for Timer T12 Low	$2C_H$	0000_H
CCU6_CC60R	Capture/Compare Register for Channel CC60	34_H	0000_H
CCU6_CC61R	Capture/Compare Register for Channel CC61	38_H	0000_H
CCU6_CC62R	Capture/Compare Register for Channel CC62	$3C_H$	0000_H
CCU6_T12MSEL	T12 Capture/Compare Mode Select Register	40_H	0000_H
CCU6_T12	Timer T12 Counter Register	78_H	0000_H
CCU6 Register Description, Timer 13 – Related Registers			
CCU6_CC63R	Capture/Compare Register for Channel CC63	00_H	0000_H
CCU6_CC63SR	Capture/Compare Shadow Register for Channel CC63	20_H	0000_H
CCU6_T13PR	Timer T13 Period Register	28_H	0000_H
CCU6_T13	Timer T13 Counter Register	$7C_H$	0000_H
CCU6 Register Description, Capture/Compare Control Registers			
CCU6_TCTR4	Timer Control Register 4	04_H	0000_H
CCU6_CMPMODIF	Compare State Modification Register	10_H	0000_H
CCU6_TCTR0	Timer Control Register 0	30_H	0000_H
CCU6_TCTR2	Timer Control Register 2	58_H	0000_H
CCU6_CMPSTAT	Compare State Register	80_H	0000_H
CCU6 Register Description, Global Modulation Control Registers			

Table 296 Register Overview (cont'd)

Register Short Name	Register Long Name	Offset Address	Reset Value
CCU6_PSLR	Passive State Level Register	50_H	0000_H
CCU6_MODCTR	Modulation Control Register	$5C_H$	0000_H
CCU6_TRPCTR	Trap Control Register	60_H	0000_H
CCU6 Register Description, Multi-Channel Modulation Control Registers			
CCU6_MCMOUTS	Multi-Channel Mode Output Shadow Register	08_H	0000_H
CCU6_MCMCTR	Multi-Channel Mode Control Register	54_H	0000_H
CCU6_MCMOUT	Multi-Channel Mode Output Register	64_H	0000_H
CCU6 Register Description, Interrupt Control Registers			
CCU6_ISR	Capture/Compare Interrupt Status Reset Register	$0C_H$	0000_H
CCU6_IEN	Capture/Compare Interrupt Enable Register	44_H	0000_H
CCU6_INP	Capture/Compare Interrupt Node Pointer Register	48_H	3940_H
CCU6_ISS	Capture/Compare Interrupt Status Set Register	$4C_H$	0000_H
CCU6_IS	Capture/Compare Interrupt Status Register	68_H	0000_H

The registers are addressed wordwise.

18.10.1 System Registers

Registers PISEL0 and PISEL2 contain bit fields that select the actual input port/signal for the module inputs. This permits the adaptation of the pin functionality of the device to the application's requirements. The output pins are chosen according to the registers in the ports.

Port Input Select Register 0

CCU6_PISEL0	Offset	Reset Value
Port Input Select Register 0	$6C_H$	see Table 297

15	14	13	12	11	10	9	8
IST12HR		ISPOS2		ISPOS1		ISPOS0	
rw		rw		rw		rw	

7	6	5	4	3	2	1	0
ISTRP		ISCC62		ISCC61		ISCC60	
rw		rw		rw		rw	

Field	Bits	Type	Description
IST12HR	15:14	rw	**Input Select for T12HR** This bit field defines the input signal used as T12HR input. 00_B **T12HRA** Either signal T12HRA (if T12EXT = 0) or T12HRE (if T12EXT = 1) is selected. 01_B **T12HRB** Either signal T12HRB (if T12EXT = 0) or T12HRF (if T12EXT = 1) is selected. 10_B **T12HRC** Either signal T12HRC (if T12EXT = 0) or T12HRG (if T12EXT = 1) is selected. 11_B **T12HRD** Either signal T12HRD (if T12EXT = 0) or T12HRH (if T12EXT = 1) is selected.
ISPOS2	13:12	rw	**Input Select for CCPOS2** This bit field defines the port pin that is used for the CCPOS2 input signal. 00_B **CCPOS2_0** The input pin for CCPOS2_0. 01_B **CCPOS2_1** The input pin for CCPOS2_1. 10_B **CCPOS2_2** The input pin for CCPOS2_2. 11_B **CCPOS2_3** The input pin for CCPOS2_3.
ISPOS1	11:10	rw	**Input Select for CCPOS1** This bit field defines the port pin that is used for the CCPOS1 input signal. 00_B **CCPOS1_0** The input pin for CCPOS1_0. 01_B **CCPOS1_1** The input pin for CCPOS1_1. 10_B **CCPOS1_2** The input pin for CCPOS1_2. 11_B **CCPOS1_3** The input pin for CCPOS1_3.
ISPOS0	9:8	rw	**Input Select for CCPOS0** This bit field defines the port pin that is used for the CCPOS0 input signal. 00_B **CCPOS0_0** The input pin for CCPOS0_0. 01_B **CCPOS0_1** The input pin for CCPOS0_1. 10_B **CCPOS0_2** The input pin for CCPOS0_2. 11_B **CCPOS0_3** The input pin for CCPOS0_3.
ISTRP	7:6	rw	**Input Select for CTRAP** This bit field defines the port pin that is used for the $\overline{\text{CTRAP}}$ input signal. 00_B **CTRAP_0** The input pin for $\overline{\text{CTRAP_0}}$. 01_B **CTRAP_1** The input pin for $\overline{\text{CTRAP_1}}$. 10_B **CTRAP_2** The input pin for $\overline{\text{CTRAP_2}}$. 11_B **CTRAP_3** signal from Differential Units.
ISCC62	5:4	rw	**Input Select for CC62** This bit field defines the port pin that is used for the CC62 capture input signal. 00_B **CC62_0** The input pin for CC62_0. 01_B **CC62_1** The input pin for CC62_1. 10_B **Reserved** Reserved 11_B **Reserved** Reserved

Field	Bits	Type	Description
ISCC61	3:2	rw	**Input Select for CC61** This bit field defines the port pin that is used for the CC61 capture input signal. 00_B **CC61_0** The input pin for CC61_0. 01_B **CC61_1** The input pin for CC61_1. 10_B **Reserved** Reserved 11_B **Reserved** Reserved
ISCC60	1:0	rw	**Input Select for CC60** This bit field defines the port pin that is used for the CC60 capture input signal. 00_B **CC60_0** The input pin for CC60_0. 01_B **CC60_1** The input pin for CC60_1. 10_B **Reserved** Reserved 11_B **Reserved** Reserved

Table 297 RESET of CCU6_PISEL0

Register Reset Type	Reset Values	Reset Short Name	Reset Mode	Note
RESET_TYPE_3	0000_H	RESET_TYPE_3		

Port Input Select Register 2

CCU6_PISEL2	Offset	Reset Value
Port Input Select Register 2	74_H	see Table 298

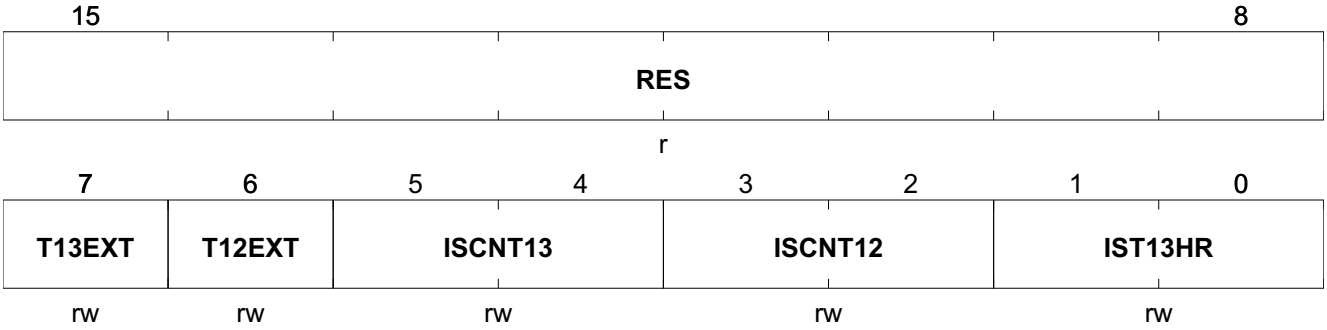

Field	Bits	Type	Description
RES	15:8	r	**Reserved**
T13EXT	7	rw	**Extension for T13HR Inputs** This bit extends the 2-bit field IST13HR. 0_B **T13HR[D:A]** One of the signals T13HR[D:A] is selected. 1_B **T13HR[H:E]** One of the signals T13HR[H:E] is selected.
T12EXT	6	rw	**Extension for T12HR Inputs** This bit extends the 2-bit field IST12HR. 0_B **T12HR[D:A]** One of the signals T12HR[D:A] is selected. 1_B **T12HR[H:E]** One of the signals T12HR[H:E] is selected.

Field	Bits	Type	Description
ISCNT13	5:4	rw	**Input Select for T13 Counting Input** This bit field defines the input event leading to a counting action of T13. 00_B **T13 prescaler** The T13 prescaler generates the counting events. Bit TCTR4.T13CNT is not taken into account. 01_B **TCTR4.T13CNT** Bit TCTR4.T13CNT written with 1 is a counting event. The T13 prescaler is not taken into account. 10_B **Rising edge** The timer T13 is counting each rising edge detected in the selected T13HR signal. 11_B **Falling Edge** The timer T13 is counting each falling edge detected in the selected T13HR signal.
ISCNT12	3:2	rw	**Input Select for T12 Counting Input** This bit field defines the input event leading to a counting action of T12. 00_B **T12 prescaler** The T12 prescaler generates the counting events. Bit TCTR4.T12CNT is not taken into account. 01_B **TCTR4.T12CNT** Bit TCTR4.T12CNT written with 1 is a counting event. The T12 prescaler is not taken into account. 10_B **Rising edge** The timer T12 is counting each rising edge detected in the selected T12HR signal. 11_B **Falling edge** The timer T12 is counting each falling edge detected in the selected T12HR signal.
IST13HR	1:0	rw	**Input Select for T13HR** This bit field defines the input signal used as T13HR input. 00_B **T13HRA** Either signal T13HRA (if T13EXT = 0) or T13HRE (if T13EXT = 1) is selected. 01_B **T13HRB** Either signal T13HRB (if T13EXT = 0) or T13HRF (if T13EXT = 1) is selected. 10_B **T13HRC** Either signal T13HRC (if T13EXT = 0) or T13HRG (if T13EXT = 1) is selected. 11_B **T13HRD** Either signal T13HRD (if T13EXT = 0) or T13HRH (if T13EXT = 1) is selected.

Table 298 RESET of CCU6_PISEL2

Register Reset Type	Reset Values	Reset Short Name	Reset Mode	Note
RESET_TYPE_3	0000_H	RESET_TYPE_3		

18.10.2 Timer 12 – Related Registers

The generation of the patterns for a 3-channel PWM is based on timer T12. The registers related to timer T12 can be concurrently updated (with well-defined conditions) in order to ensure consistency of the three PWM channels.

Timer T12 supports capture and compare modes, which can be independently selected for the three channels CC60, CC61, and CC62.

Register T12MSEL contains control bits to select the capture/compare functionality of the three channels of timer T12. Table 299, Table 300 and Table 301 define and elaborate some of the capture/compare modes selectable. Refer to the following register description for the selection.

Table 299 Double-Register Capture Modes

	Description
0100_B	The contents of T12 are stored in CC6nR after a rising edge and in CC6nSR after a falling edge on the input pin CC6n.
0101_B	The value stored in CC6nSR is copied to CC6nR after a rising edge on the input pin CC6n. The actual timer value of T12 is simultaneously stored in the shadow register CC6nSR. This feature is useful for time measurements between consecutive rising edges on pins CC6n. COUT6n is I/O.
0110_B	The value stored in CC6nSR is copied to CC6nR after a falling edge on the input pin CC6n. The actual timer value of T12 is simultaneously stored in the shadow register CC6nSR. This feature is useful for time measurements between consecutive falling edges on pins CC6n. COUT6n is I/O.
0111_B	The value stored in CC6nSR is copied to CC6nR after any edge on the input pin CC6n. The actual timer value of T12 is simultaneously stored in the shadow register CC6nSR. This feature is useful for time measurements between consecutive edges on pins CC6n. COUT6n is I/O.

Table 300 Combined T12 Modes

	Description
1000_B	Hall Sensor mode: Capture mode for channel 0, compare mode for channels 1 and 2. The contents of T12 are captured into CC60 at a valid hall event (which is a reference to the actual speed). CC61 can be used for a phase delay function between hall event and output switching. CC62 can act as a time-out trigger if the expected hall event comes too late. The value 1000_B must be programmed to MSEL0, MSEL1 and MSEL2 if the hall signals are used. In this mode, the contents of timer T12 are captured in CC60 and T12 is reset after the detection of a valid hall event. In order to avoid noise effects, the dead-time counter channel 0 is started after an edge has been detected at the hall inputs. On reaching the value of 000001_B, the hall inputs are sampled and the pattern comparison is done.
1001_B	Hysteresis-like control mode with dead-time generation: The negative edge of the CCPOSx input signal is used to reset bit CC6nST. As a result, the output signals can be switched to passive state immediately and switch back to active state (with dead-time) if the CCPOSx is high and the bit CC6nST is set by a compare event.

Table 301 Multi-Input Capture Modes

	Description
1010_B	The timer value of T12 is stored in CC6nR after a rising edge at the input pin CC6n. The timer value of T12 is stored in CC6nSR after a falling edge at the input pin CCPOSx.
1011_B	The timer value of T12 is stored in CC6nR after a falling edge at the input pin CC6n. The timer value of T12 is stored in CC6nSR after a rising edge at the input pin CCPOSx.
1100_B	The timer value of T12 is stored in CC6nR after a rising edge at the input pin CC6n. The timer value of T12 is stored in CC6nSR after a rising edge at the input pin CCPOSx.
1101_B	The timer value of T12 is stored in CC6nR after a falling edge at the input pin CC6n. The timer value of T12 is stored in CC6nSR after a falling edge at the input pin CCPOSx.
1110_B	The timer value of T12 is stored in CC6nR after any edge at the input pin CC6n. The timer value of T12 is stored in CC6nSR after any edge at the input pin CCPOSx.
1111_B	reserved (no capture or compare action)

T12 Capture/Compare Mode Select Register

CCU6_T12MSEL	Offset	Reset Value
T12 Capture/Compare Mode Select Register	40_H	see Table 302

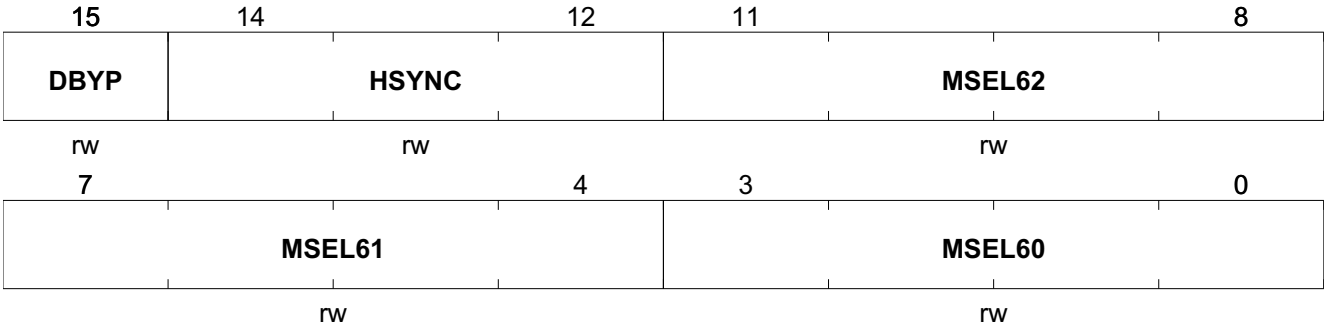

Field	Bits	Type	Description
DBYP	15	rw	**Delay Bypass** Bit DBYP defines if the source signal for the sampling of the Hall input pattern (selected by HSYNC) uses the dead-time counter DTC0 of timer T12 as additional delay or if the delay is bypassed. 0_B **Not active** The delay bypass is not active. The dead-time counter DTC0 is generating a delay after the source signal becomes active. 1_B **Active** The delay bypass is active. The dead-time counter DTC0 is not used by the sampling of the Hall pattern.
HSYNC	14:12	rw	**Hall Synchronization** Bit field HSYNC defines the source for the sampling of the Hall input pattern and the comparison to the current and the expected Hall pattern bit fields. In all modes, a trigger by software by writing a 1 to bit SWHC is possible. 000_B **Any** Any edge at one of the inputs CCPOSx (x = 0, 1, 2) triggers the sampling. 001_B **T13 compare-match** A T13 compare-match triggers the sampling. 010_B **T13 period-match** A T13 period-match triggers the sampling. 011_B **Hall** The Hall sampling triggered by hardware sources is switched off. 100_B **T12 period-match** A T12 period-match (while counting up) triggers the sampling. 101_B **T12 one-match** A T12 one-match (while counting down) triggers the sampling. 110_B **T12 compare-match UP** A T12 compare-match of channel 0 (while counting up) triggers the sampling. 111_B **T12 compare-match DOWN** A T12 compare-match of channel 0 (while counting down) triggers the sampling.

Field	Bits	Type	Description
MSEL62	11:8	rw	**Capture/Compare Mode Selection** These bit fields select the operating mode of the three timer T12 capture/compare channels. Each channel (n = 0, 1, 2) can be programmed individually either for compare or capture operation according to: 0000_B **Compare outputs disabled** Compare outputs disabled, pins CC6n and COUT6n can be used for I/O. No capture action. 0001_B **Pin CC6n, pin COUT6n** Compare output on pin CC6n, pin COUT6n can be used for I/O. No capture action. 0010_B **Pin COUT6n, Pin CC6n** Compare output on pin COUT6n, pin CC6n can be used for I/O. No capture action. 0011_B **Pins COUT6n and CC6n** Compare output on pins COUT6n and CC6n. $01XX_B$ **Double-Register Capture modes** see **Table 299**. 1000_B **Hall Sensor mode** see **Table 300**. In order to enable the hall edge detection, all three MSEL6x must be programmed to Hall Sensor mode. 1001_B **Hysteresis-like mode** see **Table 300**. $101X_B$ **Multi-Input Capture modes** see **Table 301**. $11XX_B$ **Multi-Input Capture modes** see **Table 301**.
MSEL61	7:4	rw	**Capture/Compare Mode Selection** These bit fields select the operating mode of the three timer T12 capture/compare channels. Each channel (n = 0, 1, 2) can be programmed individually either for compare or capture operation according to: 0000_B **Compare outputs disabled** Compare outputs disabled, pins CC6n and COUT6n can be used for I/O. No capture action. 0001_B **Pin CC6n, pin COUT6n** Compare output on pin CC6n, pin COUT6n can be used for I/O. No capture action. 0010_B **Pin COUT6n, Pin CC6n** Compare output on pin COUT6n, pin CC6n can be used for I/O. No capture action. 0011_B **Pins COUT6n and CC6n** Compare output on pins COUT6n and CC6n. $01XX_B$ **Double-Register Capture modes** see **Table 299**. 1000_B **Hysteresis-like mode** see **Table 300**. In order to enable the hall edge detection, all three MSEL6x must be programmed to Hall Sensor mode. 1001_B **Hysteresis-like mode** see **Table 300**. $101X_B$ **Multi-Input Capture modes** see **Table 301**. $11XX_B$ **Multi-Input Capture modes** see **Table 301**.

Field	Bits	Type	Description
MSEL60	3:0	rw	**Capture/Compare Mode Selection** These bit fields select the operating mode of the three timer T12 capture/compare channels. Each channel (n = 0, 1, 2) can be programmed individually either for compare or capture operation according to: 0000_B **Compare outputs disabled** Compare outputs disabled, pins CC6n and COUT6n can be used for I/O. No capture action. 0001_B **Pin CC6n, pin COUT6n** Compare output on pin CC6n, pin COUT6n can be used for I/O. No capture action. 0010_B **Pin COUT6n, Pin CC6n** Compare output on pin COUT6n, pin CC6n can be used for I/O. No capture action. 0011_B **Pins COUT6n and CC6n** Compare output on pins COUT6n and CC6n. $01XX_B$ **Double-Register Capture modes** see Table 299. 1000_B **Hysteresis-like mode** see Table 300. In order to enable the hall edge detection, all three MSEL6x must be programmed to Hall Sensor mode. 1001_B **Hysteresis-like mode** see Table 300. $101X_B$ **Multi-Input Capture modes** see Table 301. $11XX_B$ **Multi-Input Capture modes** see Table 301.

Table 302 RESET of CCU6_T12MSEL

Register Reset Type	Reset Values	Reset Short Name	Reset Mode	Note
RESET_TYPE_3	0000_H	RESET_TYPE_3		

Timer T12 Counter Register

Register T12 represents the counting value of timer T12. It can only be written while the timer T12 is stopped. Write actions while T12 is running are not taken into account. Register T12 can always be read by software.

In edge-aligned mode, T12 only counts up, whereas in center-aligned mode, T12 can count up and down.

CCU6_T12	Offset	Reset Value
Timer T12 Counter Register	78_H	see Table 303

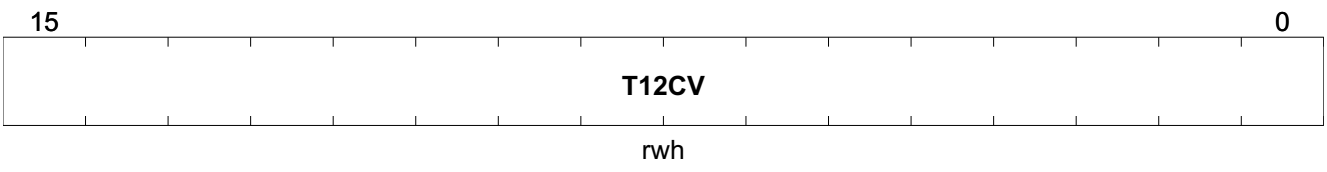

Field	Bits	Type	Description
T12CV	15:0	rwh	**Timer T12 Counter Value** This register represents the lower 8-bit counter value of timer T12.

Table 303 RESET of CCU6_T12

Register Reset Type	Reset Values	Reset Short Name	Reset Mode	Note
RESET_TYPE_3	0000_H	RESET_TYPE_3		

Timer T12 Period Register

Register T12PR contains the period value for timer T12. The period value is compared to the actual counter value of T12 and the resulting counter actions depend on the defined counting rules. This register has a shadow register and the shadow transfer is controlled by bit STE12. A read action by software delivers the value which is currently used for the compare action, whereas the write action targets a shadow register. The shadow register structure allows a concurrent update of all T12-related values.

CCU6_T12PR	Offset	Reset Value
Timer T12 Period Register	24_H	see Table 304

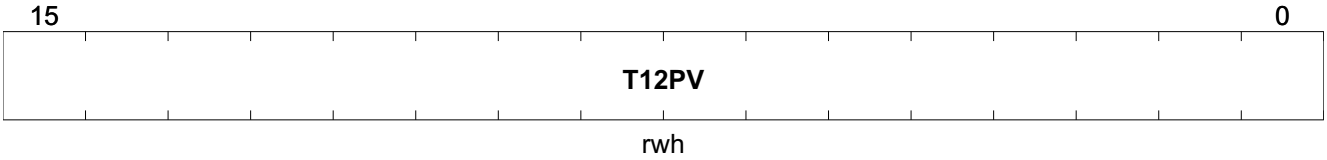

Field	Bits	Type	Description
T12PV	15:0	rwh	**T12 Period Value** The value T12PV defines the counter value for T12, which leads to a period-match. On reaching this value, the timer T12 is set to zero (edge-aligned mode) or changes its count direction to down counting (center-aligned mode).

Table 304 RESET of CCU6_T12PR

Register Reset Type	Reset Values	Reset Short Name	Reset Mode	Note
RESET_TYPE_3	0000_H	RESET_TYPE_3		

Capture/Compare Register for Channel CC60

In compare mode, the registers CC60R is the actual compare registers for T12. The values stored in CC60R are compared (all three channels in parallel) to the counter value of T12. In capture mode, the current value of the T12 counter register is captured by registers CC60R if the corresponding capture event is detected.

CCU6_CC60R	Offset	Reset Value
Capture/Compare Register for Channel CC60	34_H	see Table 307

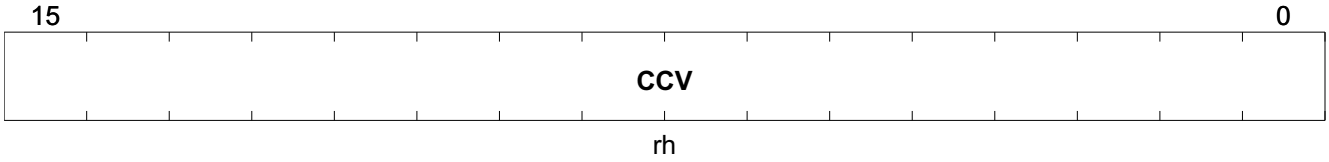

Field	Bits	Type	Description
CCV	15:0	rh	**Channel 0 Capture/Compare Value** In compare mode, the bit fields CCV contain the values that are compared to the T12 counter value. In capture mode, the captured value of T12 can be read from these registers.

Table 305 RESET of CCU6_CC60R

Register Reset Type	Reset Values	Reset Short Name	Reset Mode	Note
RESET_TYPE_3	0000_H	RESET_TYPE_3		

Capture/Compare Register for Channel CC61

In compare mode, the registers CC61R is the actual compare registers for T12. The values stored in CC61R are compared (all three channels in parallel) to the counter value of T12. In capture mode, the current value of the T12 counter register is captured by registers CC61R if the corresponding capture event is detected.

CCU6_CC61R	Offset	Reset Value
Capture/Compare Register for Channel CC61	38_H	see Table 306

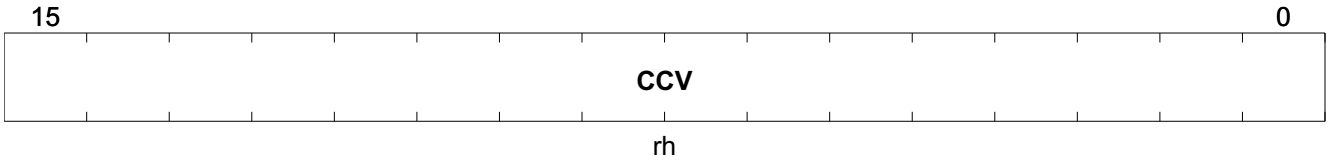

Field	Bits	Type	Description
CCV	15:0	rh	**Channel 1 Capture/Compare Value** In compare mode, the bit fields CCV contain the values that are compared to the T12 counter value. In capture mode, the captured value of T12 can be read from these registers.

Table 306 RESET of CCU6_CC61R

Register Reset Type	Reset Values	Reset Short Name	Reset Mode	Note
RESET_TYPE_3	0000_H	RESET_TYPE_3		

Capture/Compare Register for Channel CC62

In compare mode, the registers CC62R is the actual compare registers for T12. The values stored in CC62R are compared (all three channels in parallel) to the counter value of T12. In capture mode, the current value of the T12 counter register is captured by registers CC62R if the corresponding capture event is detected.

CCU6_CC62R	Offset	Reset Value
Capture/Compare Register for Channel CC62	$3C_H$	see Table 307

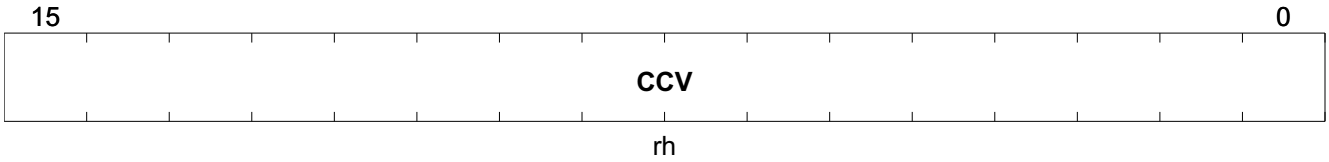

Field	Bits	Type	Description
CCV	15:0	rh	**Channel 2 Capture/Compare Value** In compare mode, the bit fields CCV contain the values that are compared to the T12 counter value. In capture mode, the captured value of T12 can be read from these registers.

Table 307 RESET of CCU6_CC62R

Register Reset Type	Reset Values	Reset Short Name	Reset Mode	Note
RESET_TYPE_3	0000_H	RESET_TYPE_3		

Capture/Compare Shadow Register for Channel CC60

The registers CC60R can only be read by software, the modification of the value is done by a shadow register transfer from register CC60SR. The corresponding shadow registers CC60SR can be read and written by software. In capture mode, the value of the T12 counter register can also be captured by registers CC60SR if the selected capture event is detected (depending on the selected mode).

CCU6_CC60SR	Offset	Reset Value
Capture/Compare Shadow Register for Channel CC60	14_H	see Table 308

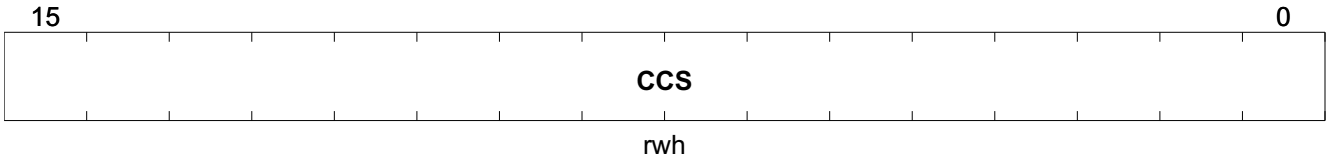

Field	Bits	Type	Description
CCS	15:0	rwh	**Shadow Register for Channel 0 Capture/Compare Value** In compare mode, the contents of bit field CCS are transferred to the bit field CCV for the corresponding channel during a shadow transfer. In capture mode, the captured value of T12 can be read from these registers.

Table 308 RESET of CCU6_CC60SR

Register Reset Type	Reset Values	Reset Short Name	Reset Mode	Note
RESET_TYPE_3	0000_H	RESET_TYPE_3		

Capture/Compare Shadow Register for Channel CC61

The registers CC61R can only be read by software, the modification of the value is done by a shadow register transfer from register CC61SR. The corresponding shadow registers CC61SR can be read and written by software. In capture mode, the value of the T12 counter register can also be captured by registers CC61SR if the selected capture event is detected (depending on the selected mode).

CCU6_CC61SR	Offset	Reset Value
Capture/Compare Shadow Register for Channel CC61	18_H	see Table 309

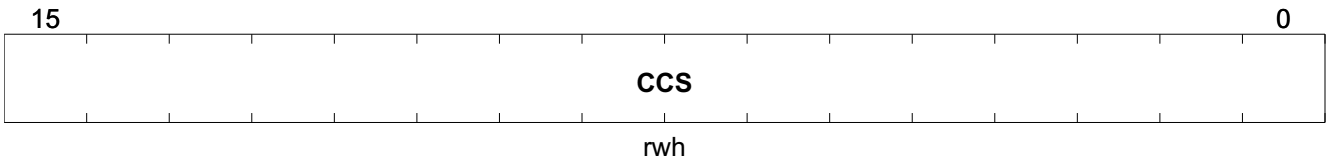

Field	Bits	Type	Description
CCS	15:0	rwh	**Shadow Register for Channel 1 Capture/Compare Value** In compare mode, the contents of bit field CCS are transferred to the bit field CCV for the corresponding channel during a shadow transfer. In capture mode, the captured value of T12 can be read from these registers.

Table 309 RESET of CCU6_CC61SR

Register Reset Type	Reset Values	Reset Short Name	Reset Mode	Note
RESET_TYPE_3	0000_H	RESET_TYPE_3		

Capture/Compare Shadow Register for Channel CC62

The registers CC62R can only be read by software, the modification of the value is done by a shadow register transfer from register CC62SR. The corresponding shadow registers CC62SR can be read and written by software. In capture mode, the value of the T12 counter register can also be captured by registers CC62SR if the selected capture event is detected (depending on the selected mode).

CCU6_CC62SR	Offset	Reset Value
Capture/Compare Shadow Register for Channel CC62	$1C_H$	see Table 310

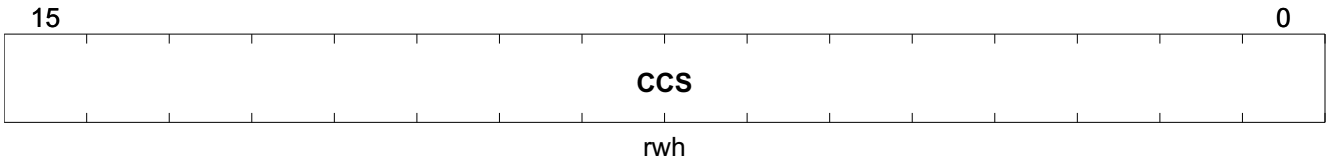

Field	Bits	Type	Description
CCS	15:0	rwh	**Shadow Register for Channel 2 Capture/Compare Value** In compare mode, the contents of bit field CCS are transferred to the bit field CCV for the corresponding channel during a shadow transfer. In capture mode, the captured value of T12 can be read from these registers.

Table 310 RESET of CCU6_CC62SR

Register Reset Type	Reset Values	Reset Short Name	Reset Mode	Note
RESET_TYPE_3	0000_H	RESET_TYPE_3		

Dead-Time Control Register for Timer T12 Low

Register T12DTC controls the dead-time generation for the timer T12 compare channels. Each channel can be independently enabled/disabled for dead-time generation. If enabled, the transition from passive state to active state is delayed by the value defined by bit field DTM. The dead-time counter can only be reloaded while it is zero.

The dead time counters are clocked with the same frequency as T12. This structure allows symmetrical dead-time generation in center-aligned and in edge-aligned PWM mode. A duty cycle of 50% leads to CC6x, COUT6x switched on for: 0.5 * period - dead time.

Note: The dead-time counters are not reset by bit T12RES, but by bit DTRES.

CCU6_T12DTC	Offset	Reset Value
Dead-Time Control Register for Timer T12 Low	$2C_H$	see Table 311

15	14	13	12	11	10	9	8	7	0
RES	DTR2	DTR1	DTR0	RES	DTE2	DTE1	DTE0	DTM	
r	rh	rh	rh	r	rw	rw	rw	rw	

Field	Bits	Type	Description
RES	15	r	**Reserved** Returns 0 if read; should be written with 0.
DTR2	14	rh	**Dead-Time Run Indication Bit 2** Bit DTR2 indicates the status of the dead-time generation for compare channel 2 of timer T12. 0_B **Zero** The value of the corresponding dead-time counter channel is 0. 1_B **Not Zero** The value of the corresponding dead-time counter channel is not 0.

Field	Bits	Type	Description
DTR1	13	rh	**Dead-Time Run Indication Bit 1** Bit DTR1 indicates the status of the dead-time generation for compare channel 1 of timer T12. 0_B **Zero** The value of the corresponding dead-time counter channel is 0. 1_B **Not Zero** The value of the corresponding dead-time counter channel is not 0.
DTR0	12	rh	**Dead-Time Run Indication Bit 0** Bit DTR0 indicate the status of the dead-time generation for compare channel 0 of timer T12. 0_B **Zero** The value of the corresponding dead-time counter channel is 0. 1_B **Not Zero** The value of the corresponding dead-time counter channel is not 0.
RES	11	r	**Reserved**
DTE2	10	rw	**Dead-Time Enable Bit 2** Bit DTE2 enables and disables the dead-time generation for compare channel 2 of timer T12. 0_B **Disabled** Dead-time generation is disabled. The corresponding outputs switch from the passive state to the active state (according to the actual compare status) without any delay. 1_B **Enabled** Dead-time generation is enabled. The corresponding outputs switch from the passive state to the active state (according to the compare status) with the delay programmed in bit field DTM.
DTE1	9	rw	**Dead-Time Enable Bit 1** Bit DTE1 enables and disables the dead-time generation for compare channel 1 of timer T12. 0_B **Disabled** Dead-time generation is disabled. The corresponding outputs switch from the passive state to the active state (according to the actual compare status) without any delay. 1_B **Enabled** Dead-time generation is enabled. The corresponding outputs switch from the passive state to the active state (according to the compare status) with the delay programmed in bit field DTM.
DTE0	8	rw	**Dead-Time Enable Bit 0** Bit DTE0 enables and disables the dead-time generation for compare channel 0 of timer T12. 0_B **Disabled** Dead-time generation is disabled. The corresponding outputs switch from the passive state to the active state (according to the actual compare status) without any delay. 1_B **Enabled** Dead-time generation is enabled. The corresponding outputs switch from the passive state to the active state (according to the compare status) with the delay programmed in bit field DTM.

Field	Bits	Type	Description
DTM	7:0	rw	**Dead-Time** Bit field DTM determines the programmable delay between switching from the passive state to the active state of the selected outputs. The switching from the active state to the passive state is not delayed.

Table 311 RESET of CCU6_T12DTC

Register Reset Type	Reset Values	Reset Short Name	Reset Mode	Note
RESET_TYPE_3	0000_H	RESET_TYPE_3		

18.10.3 Timer 13 – Related Registers

The generation of the patterns for a single channel pulse width modulation (PWM) is based on timer T13. The registers related to timer T13 can be concurrently updated (with well-defined conditions) in order to ensure consistency of the PWM signal. T13 can be synchronized to several timer T12 events.

Timer T13 supports only compare mode on its compare channel CC63.

Register T13 represents the counting value of timer T13. It can only be written while the timer T13 is stopped. Write actions while T13 is running are not taken into account. Register T13 can always be read by software.

Timer T13 supports only edge-aligned mode (counting up).

CCU6_T13	Offset	Reset Value
Timer T13 Counter Register	**$7C_H$**	**see Table 312**

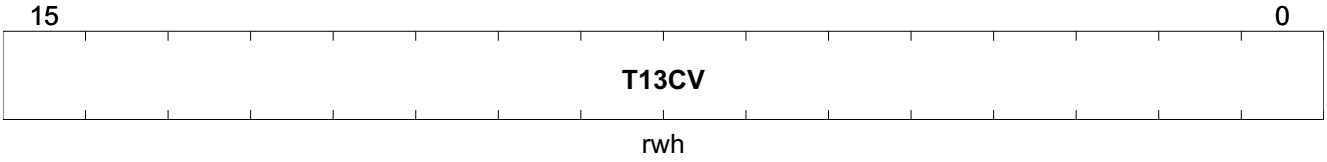

Field	Bits	Type	Description
T13CV	15:0	rwh	**Timer T13 Counter Value** This register represents the lower 8-bit counter value of timer T13.

Table 312 RESET of CCU6_T13

Register Reset Type	Reset Values	Reset Short Name	Reset Mode	Note
RESET_TYPE_3	0000_H	RESET_TYPE_3		

Register T13PR contains the period value for timer T13. The period value is compared to the actual counter value of T13 and the resulting counter actions depend on the defined counting rules. This register has a shadow register and the shadow transfer is controlled by bit STE13. A read action by software delivers the value which is currently used for the compare action, whereas the write action targets a shadow register. The shadow register structure allows a concurrent update of all T13-related values.

CCU6_T13PR	Offset	Reset Value
Timer T13 Period Register	**28_H**	**see Table 313**

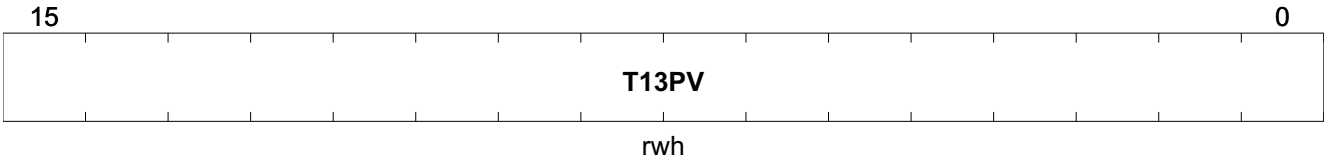

Field	Bits	Type	Description
T13PV	15:0	rwh	**T13 Period Value** The value T13PV defines the counter value for T13, which leads to a period-match. On reaching this value, the timer T13 is set to zero.

Table 313 RESET of CCU6_T13PR

Register Reset Type	Reset Values	Reset Short Name	Reset Mode	Note
RESET_TYPE_3	0000_H	RESET_TYPE_3		

Register CC63R is the actual compare register for T13. The value stored in CC63R is compared to the counter value of T13. The State Bit CC63ST is located in register CMPSTAT.

CCU6_CC63R	Offset	Reset Value
Capture/Compare Register for Channel CC63	00_H	see Table 314

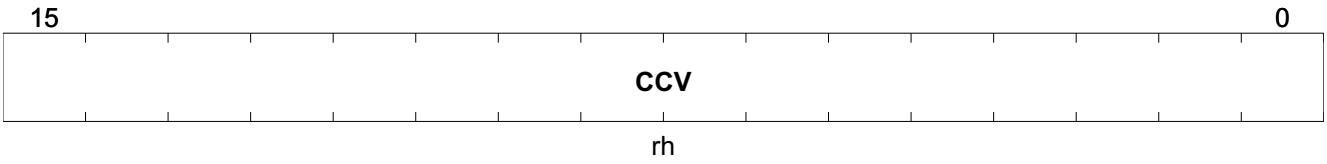

Field	Bits	Type	Description
CCV	15:0	rh	**Channel CC63 Compare Value Low Byte** The bit field CCV contains the value that is compared to the T13 counter value.

Table 314 RESET of CCU6_CC63R

Register Reset Type	Reset Values	Reset Short Name	Reset Mode	Note
RESET_TYPE_3	0000_H	RESET_TYPE_3		

The register CC63R can only be read by software and the modification of the value is done by a shadow register transfer from register CC63SR. The corresponding shadow register CC63SR can be read and written by software.

CCU6_CC63SR	Offset	Reset Value
Capture/Compare Shadow Register for Channel CC63	20_H	see Table 315

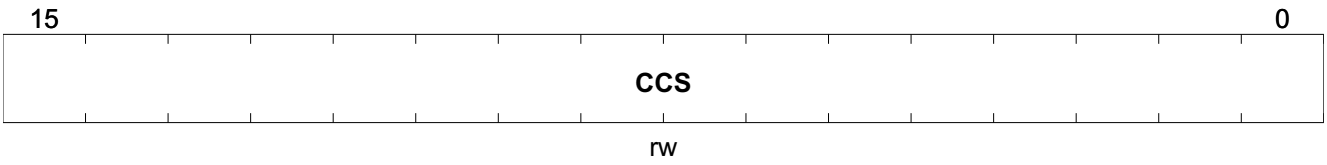

Field	Bits	Type	Description
CCS	15:0	rw	**Shadow Register for Channel CC63 Compare Value** The contents of bit field CCS are transferred to the bit field CCV during a shadow transfer.

Table 315 RESET of CCU6_CC63SR

Register Reset Type	Reset Values	Reset Short Name	Reset Mode	Note
RESET_TYPE_3	0000_H	RESET_TYPE_3		

18.10.4 Capture/Compare Control Registers

The Compare State Register CMPSTAT contains status bits monitoring the current capture and compare state, and control bits defining the active/passive state of the compare channels.

CCU6_CMPSTAT	Offset	Reset Value
Compare State Register	80_H	see Table 316

15	14	13	12	11	10	9	8
T13IM	COUT63PS	COUT62PS	CC62PS	COUT61PS	CC61PS	COUT60PS	CC60PS
rwh	rwh	rwh	rwh	rwh	rwh	rwh	rwh
7	6	5	4	3	2	1	0
RES	CC63ST	CCPOS2	CCPOS1	CCPOS0	CC62ST	CC61ST	CC60ST
r	rh	rh	rh	rh	rh	rh	rh

Field	Bits	Type	Description
T13IM	15	rwh	**T13 Inverted Modulation** Bit T13IM inverts the T13 signal for the modulation of the CC6x and COUT6x (x = 0, 1, 2) signals. This bit has a shadow bit and is updated in parallel to the compare and period registers of T13. A read action targets the actually used values, whereas a write action targets the shadow bit. 0_B **Not inverted** T13 output is not inverted. 1_B **Inverted** T13 output is inverted for further modulation.
COUT63PS	14	rwh	**Passive State Select for Compare Outputs** Bits COUT6xPS select the state of the corresponding compare channel, which is considered to be the passive state. During the passive state, the passive level (defined in register PSLR) is driven by the output pin. Bits COUT6xPS (x = 0, 1, 2) are related to T12, bit COUT63PS is related to T13. These bits have shadow bits and are updated in parallel to the capture/compare registers of T12 and T13, respectively. A read action targets the actually used values, whereas a write action targets the shadow bits. In capture mode, these bits are not used. 0_B **Zero** The corresponding compare output drives passive level while CC6xST is 0. 1_B **One** The corresponding compare output drives passive level while CC6xST is 1.

Field	Bits	Type	Description
COUT62PS	13	rwh	**Passive State Select for Compare Outputs** COUT6xPS select the state of the corresponding compare channel, which is considered to be the passive state. During the passive state, the passive level (defined in register PSLR) is driven by the output pin. Bits COUT6xPS (x = 0, 1, 2) are related to T12, bit COUT63PS is related to T13. These bits have shadow bits and are updated in parallel to the capture/compare registers of T12 and T13, respectively. A read action targets the actually used values, whereas a write action targets the shadow bits. In capture mode, these bits are not used. 0_B **Zero** The corresponding compare output drives passive level while CC6xST is 0. 1_B **One** The corresponding compare output drives passive level while CC6xST is 1.
CC62PS	12	rwh	**Passive State Select for Compare Outputs** Bits CC6xPS select the state of the corresponding compare channel, which is considered to be the passive state. During the passive state, the passive level (defined in register PSLR) is driven by the output pin. Bits CC6xPS are related to T12, bit COUT63PS is related to T13. These bits have shadow bits and are updated in parallel to the capture/compare registers of T12 and T13, respectively. A read action targets the actually used values, whereas a write action targets the shadow bits. In capture mode, these bits are not used. 0_B **Zero** The corresponding compare output drives passive level while CC6xST is 0. 1_B **One** The corresponding compare output drives passive level while CC6xST is 1.
COUT61PS	11	rwh	**Passive State Select for Compare Outputs** Bits COUT6xPS select the state of the corresponding compare channel, which is considered to be the passive state. During the passive state, the passive level (defined in register PSLR) is driven by the output pin. Bits COUT6xPS (x = 0, 1, 2) are related to T12, bit COUT63PS is related to T13. These bits have shadow bits and are updated in parallel to the capture/compare registers of T12 and T13, respectively. A read action targets the actually used values, whereas a write action targets the shadow bits. In capture mode, these bits are not used. 0_B **Zero** The corresponding compare output drives passive level while CC6xST is 0. 1_B **One** The corresponding compare output drives passive level while CC6xST is 1.

Field	Bits	Type	Description
CC61PS	10	rwh	**Passive State Select for Compare Outputs** Bits CC6xPS select the state of the corresponding compare channel, which is considered to be the passive state. During the passive state, the passive level (defined in register PSLR) is driven by the output pin. Bits CC6xPS are related to T12, bit COUT63PS is related to T13. These bits have shadow bits and are updated in parallel to the capture/compare registers of T12 and T13, respectively. A read action targets the actually used values, whereas a write action targets the shadow bits. In capture mode, these bits are not used. 0_B **Zero** The corresponding compare output drives passive level while CC6xST is 0. 1_B **One** The corresponding compare output drives passive level while CC6xST is 1.
COUT60PS	9	rwh	**Passive State Select for Compare Outputs** Bits COUT6xPS select the state of the corresponding compare channel, which is considered to be the passive state. During the passive state, the passive level (defined in register PSLR) is driven by the output pin. Bits COUT6xPS (x = 0, 1, 2) are related to T12, bit COUT63PS is related to T13. These bits have shadow bits and are updated in parallel to the capture/compare registers of T12 and T13, respectively. A read action targets the actually used values, whereas a write action targets the shadow bits. In capture mode, these bits are not used. 0_B **Zero** The corresponding compare output drives passive level while CC6xST is 0. 1_B **One** The corresponding compare output drives passive level while CC6xST is 1.
CC60PS	8	rwh	**Passive State Select for Compare Outputs** Bits CC6xPS select the state of the corresponding compare channel, which is considered to be the passive state. During the passive state, the passive level (defined in register PSLR) is driven by the output pin. Bits CC6xPS are related to T12, bit COUT63PS is related to T13. These bits have shadow bits and are updated in parallel to the capture/compare registers of T12 and T13, respectively. A read action targets the actually used values, whereas a write action targets the shadow bits. In capture mode, these bits are not used. 0_B **Zero** The corresponding compare output drives passive level while CC6xST is 0. 1_B **One** The corresponding compare output drives passive level while CC6xST is 1.
RES	7	r	**Reserved** Returns 0 if read.

Field	Bits	Type	Description
CC63ST	6	rh	**Capture/Compare State Bits** Bit CC63ST is related to T13. These bits are set and reset according to the T12 and T13 switching rules. 0_B **Less** In compare mode, the timer count is less than the compare value. In capture mode, the selected edge has not yet been detected since the bit has been reset by software the last time. 1_B **Greater** In compare mode, the counter value is greater than or equal to the compare value. In capture mode, the selected edge has been detected.
CCPOS2	5	rh	**Sampled Hall Pattern Bit 2** Bit CCPOS2 indicate the value of the input Hall pattern that has been compared to the current and expected value. The value is sampled when the event hcrdy (Hall compare ready) occurs. 0_B **Zero** The input CCPOS2 has been sampled as 0. 1_B **One** The input CCPOS2 has been sampled as 1.
CCPOS1	4	rh	**Sampled Hall Pattern Bit 1** Bit CCPOS1 indicate the value of the input Hall pattern that has been compared to the current and expected value. The value is sampled when the event hcrdy (Hall compare ready) occurs. 0_B **Zero** The input CCPOS1 has been sampled as 0. 1_B **One** The input CCPOS1 has been sampled as 1.
CCPOS0	3	rh	**Sampled Hall Pattern Bit 0** Bit CCPOS0 indicate the value of the input Hall pattern that has been compared to the current and expected value. The value is sampled when the event hcrdy (Hall compare ready) occurs. 0_B **Zero** The input CCPOS0 has been sampled as 0. 1_B **One** The input CCPOS0 has been sampled as 1.
CC62ST	2	rh	**Capture/Compare State Bits** Bits CC6xST monitor the state of the capture/compare channels. Bits CC6xST are related to T12; bit CC63ST is related to T13. These bits are set and reset according to the T12 and T13 switching rules. 0_B **Less** In compare mode, the timer count is less than the compare value. In capture mode, the selected edge has not yet been detected since the bit has been reset by software the last time. 1_B **Greater** In compare mode, the counter value is greater than or equal to the compare value. In capture mode, the selected edge has been detected.

Field	Bits	Type	Description
CC61ST	1	rh	**Capture/Compare State Bits** Bits CC6xST monitor the state of the capture/compare channels. Bits CC6xST are related to T12; bit CC63ST is related to T13. These bits are set and reset according to the T12 and T13 switching rules. 0_B **Less** In compare mode, the timer count is less than the compare value. In capture mode, the selected edge has not yet been detected since the bit has been reset by software the last time. 1_B **Greater** In compare mode, the counter value is greater than or equal to the compare value. In capture mode, the selected edge has been detected.
CC60ST	0	rh	**Capture/Compare State Bits** Bits CC6xST monitor the state of the capture/compare channels. Bits CC6xST are related to T12; bit CC63ST is related to T13. These bits are set and reset according to the T12 and T13 switching rules. 0_B **Less** In compare mode, the timer count is less than the compare value. In capture mode, the selected edge has not yet been detected since the bit has been reset by software the last time. 1_B **Greater** In compare mode, the counter value is greater than or equal to the compare value. In capture mode, the selected edge has been detected.

Table 316 RESET of CCU6_CMPSTAT

Register Reset Type	Reset Values	Reset Short Name	Reset Mode	Note
RESET_TYPE_3	0000_H	RESET_TYPE_3		

The Compare Status Modification Register CMPMODIF provides software-control (independent set and clear conditions) for the channel state bits CC6xST. This feature enables the user to individually change the status of the output lines by software, for example when the corresponding compare timer is stopped.

CCU6_CMPMODIF	Offset	Reset Value
Compare State Modification Register	10_H	see Table 317

15	14	13	11	10	9	8
RES	MCC63R	RES		MCC62R	MCC61R	MCC60R
r	w	r		w	w	w

7	6	5	3	2	1	0
RES	MCC63S	RES		MCC62S	MCC61S	MCC60S
r	w	r		w	w	w

Field	Bits	Type	Description
RES	15	r	**Reserved**
MCC63R	14	w	**Capture/Compare Status Modification Bits (Reset)** These bits are used to reset the corresponding CC63ST bits by software. This feature allows the user to individually change the status of the output lines by software, e.g. when the corresponding compare timer is stopped. This allows a bit manipulation of CC63ST-bits by a single data write action. The following functionality of a write access to bits concerning the same capture/compare state bit is provided: MCC63R, MCC63S = 00_B **Not changed** Bit CC63ST is not changed. 01_B **Set** Bit CC63ST is set. 10_B **Reset** Bit CC63ST is reset. 11_B **Reserved** Reserved (toggle)
RES	13:11	r	**Reserved** Returns 0 if read.
MCC62R	10	w	**Capture/Compare Status Modification Bit 2(Reset)** This bit is used to reset the corresponding CC62ST bits by software. This feature allows the user to individually change the status of the output lines by software, e.g. when the corresponding compare timer is stopped. This allows a bit manipulation of CC62ST-bits by a single data write action. The following functionality of a write access to bit concerning the same capture/compare state bit is provided: MCC62R, MCC62S = 00_B **Not changed** Bit CC62ST is not changed. 01_B **Set** Bit CC62ST is set. 10_B **Reset** Bit CC62ST is reset. 11_B **Reserved** Reserved (toggle)
MCC61R	9	w	**Capture/Compare Status Modification Bit 1(Reset)** This bit is used to reset the corresponding CC61ST bits by software. This feature allows the user to individually change the status of the output lines by software, e.g. when the corresponding compare timer is stopped. This allows a bit manipulation of CC61ST-bits by a single data write action. The following functionality of a write access to bit concerning the same capture/compare state bit is provided: MCC61R, MCC61S = 00_B **Not changed** Bit CC61ST is not changed. 01_B **Set** Bit CC61ST is set. 10_B **Reset** Bit CC61ST is reset. 11_B **Reserved** Reserved (toggle)

Field	Bits	Type	Description
MCC60R	8	w	**Capture/Compare Status Modification Bit 0(Reset)** This bit is used to reset the corresponding CC60ST bits by software. This feature allows the user to individually change the status of the output lines by software, e.g. when the corresponding compare timer is stopped. This allows a bit manipulation of CC620T-bits by a single data write action. The following functionality of a write access to bit concerning the same capture/compare state bit is provided: MCC02R, MCC60S = 00_B **Not changed** Bit CC60ST is not changed. 01_B **Set** Bit CC60ST is set. 10_B **Reset** Bit CC60ST is reset. 11_B **Reserved** Reserved (toggle)
RES	7	r	**Reserved**
MCC63S	6	w	**Capture/Compare Status Modification Bits (Set)** This bit is used to set the corresponding CC63ST bits by software. This feature allows the user to individually change the status of the output lines by software, e.g. when the corresponding compare timer is stopped. This allows a bit manipulation of CC63ST-bits by a single data write action. The following functionality of a write access to bits concerning the same capture/compare state bit is provided: MCC63R, MCC63S = 00_B **Not changed** Bit CC63ST is not changed. 01_B **Set** Bit CC63ST is set. 10_B **Reset** Bit CC63ST is reset. 11_B **Reserved** Reserved (toggle)
RES	5:3	r	**Reserved**
MCC62S	2	w	**Capture/Compare Status Modification Bit 2 (Set)** This bit is used to set the corresponding CC62ST bits by software. This feature allows the user to individually change the status of the output lines by software, e.g. when the corresponding compare timer is stopped. This allows a bit manipulation of CC62ST-bits by a single data write action. The following functionality of a write access to bits concerning the same capture/compare state bit is provided: MCC62R, MCC62S = 00_B **Not changed** Bit CC62ST is not changed. 01_B **Set** Bit CC62ST is set. 10_B **Reset** Bit CC62ST is reset. 11_B **Reserved** Reserved (toggle)

Field	Bits	Type	Description
MCC61S	1	w	**Capture/Compare Status Modification Bit 1 (Set)** This bit is used to set the corresponding CC61ST bits by software. This feature allows the user to individually change the status of the output lines by software, e.g. when the corresponding compare timer is stopped. This allows a bit manipulation of CC61ST-bits by a single data write action. The following functionality of a write access to bits concerning the same capture/compare state bit is provided: MCC61R, MCC61S = 00_B **Not changed** Bit CC61ST is not changed. 01_B **Set** Bit CC61ST is set. 10_B **Reset** Bit CC61ST is reset. 11_B **Reserved** Reserved (toggle)
MCC60S	0	w	**Capture/Compare Status Modification Bit 0 (Set)** This bit is used to set the corresponding CC60ST bits by software. This feature allows the user to individually change the status of the output lines by software, e.g. when the corresponding compare timer is stopped. This allows a bit manipulation of CC60ST-bits by a single data write action. The following functionality of a write access to bits concerning the same capture/compare state bit is provided: MCC60R, MCC60S = 00_B **Not changed** Bit CC60ST is not changed. 01_B **Set** Bit CC60ST is set. 10_B **Reset** Bit CC60ST is reset. 11_B **Reserved** Reserved (toggle)

Table 317 RESET of CCU6_CMPMODIF

Register Reset Type	Reset Values	Reset Short Name	Reset Mode	Note
RESET_TYPE_3	0000_H	RESET_TYPE_3		

Table 318 Capture/Compare Status Modification Bits (Set and Reset)

Field	Bits	Description
MCC60S, MCC61S, MCC62S, MCC63S	0 1 2 6	The following functionality of a write access to bits concerning the same capture/compare state bit is provided (x = 0, 1, 2, 3): MCC6xR, MCC6xS = 00_B Bit CC6xST is not changed. 01_B Bit CC6xST is set. 10_B Bit CC6xST is reset. 11_B Reserved (toggle)
MCC60R, MCC61R, MCC62R, MCC63R	8 9 10 14	

Register TCTR0 controls the basic functionality of both timers T12 and T13.

Note: A write action to the bit fields T12CLK or T12PRE is only taken into account while the timer T12 is not running (T12R = 0). A write action to the bit fields T13CLK or T13PRE is only taken into account while the timer T13 is not running (T13R = 0).

CCU6_TCTR0	Offset	Reset Value
Timer Control Register 0	30_H	see Table 319

15	14	13	12	11	10	8
RES		STE13	T13R	T13PRE	T13CLK	
r		rh	rh	rw	rw	

7	6	5	4	3	2	0
CTM	CDIR	STE12	T12R	T12PRE	T12CLK	
rw	rh	rh	rh	rw	rw	

Field	Bits	Type	Description
RES	15:14	r	**Reserved** Returns 0 if read.
STE13	13	rh	**Timer T13 Shadow Transfer Enable** Bit STE13 enables or disables the shadow transfer of the T13 period value, the compare value and passive state select bit and level from their shadow registers to the actual registers if a T13 shadow transfer event is detected. Bit STE13 is cleared by hardware after the shadow transfer. A T13 shadow transfer event is a period-match. 0_B **Disabled** The shadow register transfer is disabled. 1_B **Enabled** The shadow register transfer is enabled.
T13R	12	rh	**Timer T13 Run Bit** T13R starts and stops timer T13. It is set/reset by software by setting bits T13RS or T13RR or it is set/reset by hardware according to the function defined by bit fields T13SSC, T13TEC and T13TED. A concurrent set/reset action on T13R (from T13SSC, T13TEC, T13RR or T13RS) will have no effect. The bit T13R will remain unchanged. 0_B **Stop** Timer T13 is stopped. 1_B **Run** Timer T13 is running.
T13PRE	11	rw	**Timer T13 Prescaler Bit** In order to support higher clock frequencies, an additional prescaler factor of 1/256 can be enabled for the prescaler for T13. 0_B **Disabled** The additional prescaler for T13 is disabled. 1_B **Enabled** The additional prescaler for T13 is enabled.

Field	Bits	Type	Description
T13CLK	10:8	rw	**Timer T13 Input Clock Select** Selects the input clock for timer T13 which is derived from the peripheral clock according to the equation $f_{T13} = f_{CCU}/2^{<T13CLK>}$. 000_B **1** $f_{T13} = f_{CCU}$ 001_B **2** $f_{T13} = f_{CCU} / 2$ 010_B **4** $f_{T13} = f_{CCU} / 4$ 011_B **8** $f_{T13} = f_{CCU} / 8$ 100_B **16** $f_{T13} = f_{CCU} / 16$ 101_B **32** $f_{T13} = f_{CCU} / 32$ 110_B **64** $f_{T13} = f_{CCU} / 64$ 111_B **128** $f_{T13} = f_{CCU} / 128$
CTM	7	rw	**T12 Operating Mode** 0_B **Edge-aligned Mode** T12 always counts up and continues counting from zero after reaching the period value. 1_B **Center-aligned Mode** T12 counts down after detecting a period-match and counts up after detecting a one-match.
CDIR	6	rh	**Count Direction of Timer T12** This bit is set/reset according to the counting rules of T12. 0_B **UP** T12 counts up. 1_B **DOWN** T12 counts down.
STE12	5	rh	**Timer T12 Shadow Transfer Enable** Bit STE12 enables or disables the shadow transfer of the T12 period value, the compare values and passive state select bits and levels from their shadow registers to the actual registers if a T12 shadow transfer event is detected. Bit STE12 is cleared by hardware after the shadow transfer. A T12 shadow transfer event is a period-match while counting up or a one-match while counting down. 0_B **Disabled** The shadow register transfer is disabled. 1_B **Enabled** The shadow register transfer is enabled.
T12R	4	rh	**Timer T12 Run Bit** T12R starts and stops timer T12. It is set/reset by software by setting bits T12RS or T12RR, or it is reset by hardware according to the function defined by bit field T12SSC. A concurrent set/reset action on T12R (from T12SSC, T12RR or T12RS) will have no effect. The bit T12R will remain unchanged. 0_B **Stop** Timer T12 is stopped. 1_B **Run** Timer T12 is running.
T12PRE	3	rw	**Timer T12 Prescaler Bit** In order to support higher clock frequencies, an additional prescaler factor of 1/256 can be enabled for the prescaler for T12. 0_B **Disabled** The additional prescaler for T12 is disabled. 1_B **Enabled** The additional prescaler for T12 is enabled.

Field	Bits	Type	Description
T12CLK	2:0	rw	**Timer T12 Input Clock Select** Selects the input clock for timer T12 which is derived from the peripheral clock according to the equation $f_{T12} = f_{CCU} / 2^{<T12CLK>}$. 000_B **1** $f_{T12} = f_{CCU}$ 001_B **2** $f_{T12} = f_{CCU} / 2$ 010_B **4** $f_{T12} = f_{CCU} / 4$ 011_B **8** $f_{T12} = f_{CCU} / 8$ 100_B **16** $f_{T12} = f_{CCU} / 16$ 101_B **32** $f_{T12} = f_{CCU} / 32$ 110_B **64** $f_{T12} = f_{CCU} / 64$ 111_B **128** $f_{T12} = f_{CCU} / 128$

Table 319 RESET of CCU6_TCTR0

Register Reset Type	Reset Values	Reset Short Name	Reset Mode	Note
RESET_TYPE_3	0000_H	RESET_TYPE_3		

Register TCTR2 controls the single-shot and the synchronization functionality of both timers T12 and T13. Both timers can run in single-shot mode. In this mode, they stop their counting sequence automatically after one counting period with a count value of zero. The single-shot mode and the synchronization feature of T13 to T12 allow the generation of events with a programmable delay after well-defined PWM actions of T12. For example, this feature can be used to trigger AD conversions, after a specified delay (to avoid problems due to switching noise), synchronously to a PWM event.

CCU6_TCTR2	Offset	Reset Value
Timer Control Register 2	58_H	see Table 320

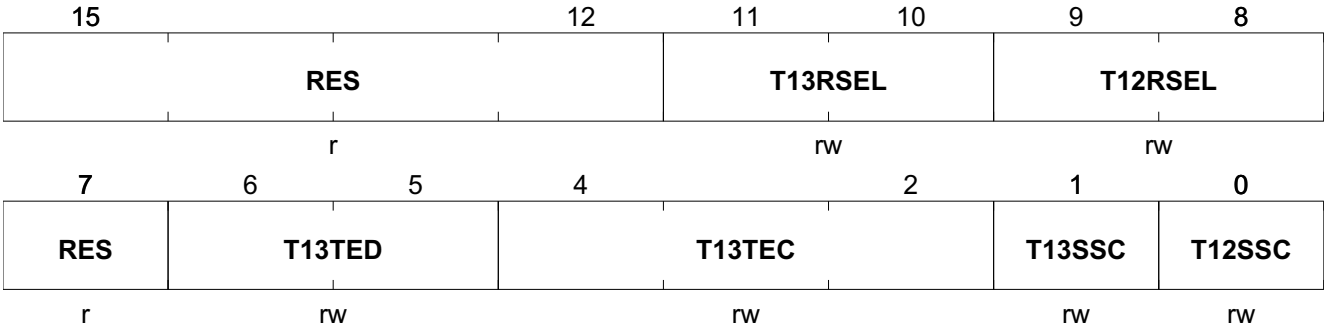

Field	Bits	Type	Description
RES	15:12	r	**Reserved** Returns 0 if read.
T13RSEL	11:10	rw	**Timer T13 External Run Selection** Bit field T13RSEL defines the event of signal T13HR that can set the run bit T13R by hardware. 00_B **Disabled** The external setting of T13R is disabled. 01_B **Rising edge** Bit T13R is set if a rising edge of signal T13HR is detected. 10_B **Falling edge** Bit T13R is set if a falling edge of signal T13HR is detected. 11_B **Edge** Bit T13R is set if an edge of signal T13HR is detected.
T12RSEL	9:8	rw	**Timer T12 External Run Selection** Bit field T12RSEL defines the event of signal T12HR that can set the run bit T12R by hardware. 00_B **Disabled** The external setting of T12R is disabled. 01_B **Rising edge** Bit T12R is set if a rising edge of signal T12HR is detected. 10_B **Falling edge** Bit T12R is set if a falling edge of signal T12HR is detected. 11_B **Edge** Bit T12R is set if an edge of signal T12HR is detected.
RES	7	r	**Reserved** Returns 0 if read.

Field	Bits	Type	Description
T13TED	6:5	rw	**Timer T13 Trigger Event Direction** Bit field T13TED delivers additional information to control the automatic set of bit T13R in the case that the trigger action defined by T13TEC is detected. 00_B **No action** 01_B **Up** while T12 is counting up 10_B **Down** while T12 is counting down 11_B **Independent** independent on the count direction of T12
T13TEC	4:2	rw	**T13 Trigger Event Control** Bit field T13TEC selects the trigger event to start T13 (automatic set of T13R for synchronization to T12 compare signals) according to following combinations: 000_B **No action** 001_B **Channel 0** set T13R on a T12 compare event on channel 0 010_B **Channel 1** set T13R on a T12 compare event on channel 1 011_B **Channel 2** set T13R on a T12 compare event on channel 2 100_B **Channel 0,1,2** set T13R on any T12 compare event on the channels 0, 1, or 2 101_B **Period-match** set T13R upon a period-match of T12 110_B **Zero-match** set T13R upon a zero-match of T12 (while counting up) 111_B **CCPOSx** set T13R on any edge of inputs CCPOSx
T13SSC	1	rw	**Timer T13 Single Shot Control** This bit controls the single shot-mode of T13. 0_B **No action** No hardware action on T13R 1_B **Enabled** The single-shot mode is enabled, the bit T13R is reset by hardware if T13 reaches its period value. In parallel to the reset action of bit T13R, the bit CC63ST is reset.
T12SSC	0	rw	**Timer T12 Single Shot Control** This bit controls the single shot-mode of T12. 0_B **Disabled** The single-shot mode is disabled, no hardware action on T12R. 1_B **Enabled** The single shot mode is enabled, the bit T12R is reset by hardware if: – T12 reaches its period value in edge-aligned mode – T12 reaches the value 1 while down counting in center-aligned mode. In parallel to the reset action of bit T12R, the bits CC6xST (x = 0, 1, 2) are reset.

Table 320 RESET of CCU6_TCTR2

Register Reset Type	Reset Values	Reset Short Name	Reset Mode	Note
RESET_TYPE_3	0000_H	RESET_TYPE_3		

Example

If the timer T13 is intended to start at any compare event on T12 (T13TEC = 100_B), the trigger event direction can be programmed to:

- counting up >> a T12 channel 0, 1, 2 compare match triggers T13R only while T12 is counting up
- counting down >> a T12 channel 0, 1, 2 compare match triggers T13R only while T12 is counting down
- independent from bit CDIR >> each T12 channel 0, 1, 2 compare match triggers T13R

The timer count direction is taken from the value of bit CDIR. As a result, if T12 is running in edge-aligned mode (counting up only), T13 can only be started automatically if bit field T13TED = 01_B or 11_B.

Register TCTR4 provides software-control (independent set and clear conditions) for the run bits T12R and T13R. Furthermore, the timers can be reset (while running) and bits STE12 and STE13 can be controlled by software. Reading these bits always returns 0.

CCU6_TCTR4	Offset	Reset Value
Timer Control Register 4	04_H	see Table 321

15	14	13	12	11	10	9	8
T13STD	T13STR	T13CNT	RES		T13RES	T13RS	T13RR
w	w	w	r		w	w	w
7	6	5	4	3	2	1	0
T12STD	T12STR	T12CNT	RES	DTRES	T12RES	T12RS	T12RR
w	w	w	r	w	w	w	w

Field	Bits	Type	Description
T13STD	15	w	**Timer T13 Shadow Transfer Disable** 0_B **No action** 1_B **STE13 reset** STE13 is reset without triggering the shadow transfer.
T13STR	14	w	**Timer T13 Shadow Transfer Request** 0_B **No action** 1_B **STE13 set** STE13 is set, enabling the shadow transfer.
T13CNT	13	w	**Timer T13 Count Event** 0_B **No action** 1_B **Count** If enabled (PISEL2), timer T13 counts one step.
RES	12:11	r	**Reserved** Returns 0 if read.
T13RES	10	w	**Timer T13 Reset** 0_B **No effect** No effect on T13. 1_B **Zero** The T13 counter register is reset to zero. The switching of the output signals is according to the switching rules. Setting of T13RES has no impact on bit T13R.
T13RS	9	w	**Timer T13 Run Set** Setting this bit sets the T13R bit. 0_B **No influence** T13R is not influenced. 1_B **T13R set** T13R is set, T13 counts.

Field	Bits	Type	Description
T13RR	8	w	**Timer T13 Run Reset** Setting this bit resets the T13R bit. 0_B **No influence** T13R is not influenced. 1_B **T13R cleared** T13R is cleared, T13 stops counting.
T12STD	7	w	**Timer T12 Shadow Transfer Disable** 0_B **No action** 1_B **STE12 reset** STE12 is reset without triggering the shadow transfer.
T12STR	6	w	**Timer T12 Shadow Transfer Request** 0_B **No action** 1_B **STE12 set** STE12 is set, enabling the shadow transfer.
T12CNT	5	w	**Timer T12 Count Event** 0_B **No action** 1_B **Count** If enabled (PISEL2), timer T12 counts one step.
RES	4	r	**Reserved** Returns 0 if read.
DTRES	3	w	**Dead-Time Counter Reset** 0_B **No effect** No effect on the dead-time counters. 1_B **Zero** The three dead-time counter channels are reset to zero.
T12RES	2	w	**Timer T12 Reset** 0_B **No effect** No effect on T12. 1_B **Zero** The T12 counter register is reset to zero. The switching of the output signals is according to the switching rules. Setting of T12RES has no impact on bit T12R.
T12RS	1	w	**Timer T12 Run Set** Setting this bit sets the T12R bit. 0_B **No influence** T12R is not influenced. 1_B **T12R set** T12R is set, T12 counts.
T12RR	0	w	**Timer T12 Run Reset** Setting this bit resets the T12R bit. 0_B **No influence** T12R is not influenced. 1_B **T12R cleared** T12R is cleared, T12 stops counting.

Table 321 RESET of CCU6_TCTR4

Register Reset Type	Reset Values	Reset Short Name	Reset Mode	Note
RESET_TYPE_3	0000_H	RESET_TYPE_3		

Note: A simultaneous write of a 1 to bits which set and reset the same bit will trigger no action. The corresponding bit will remain unchanged.

18.10.5 Global Modulation Control Registers

Register MODCTR contains control bits enabling the modulation of the corresponding output signal by PWM pattern generated by the timers T12 and T13. Furthermore, the multi-channel mode can be enabled as additional modulation source for the output signals.

CCU6_MODCTR	Offset	Reset Value
Modulation Control Register	$5C_H$	see Table 322

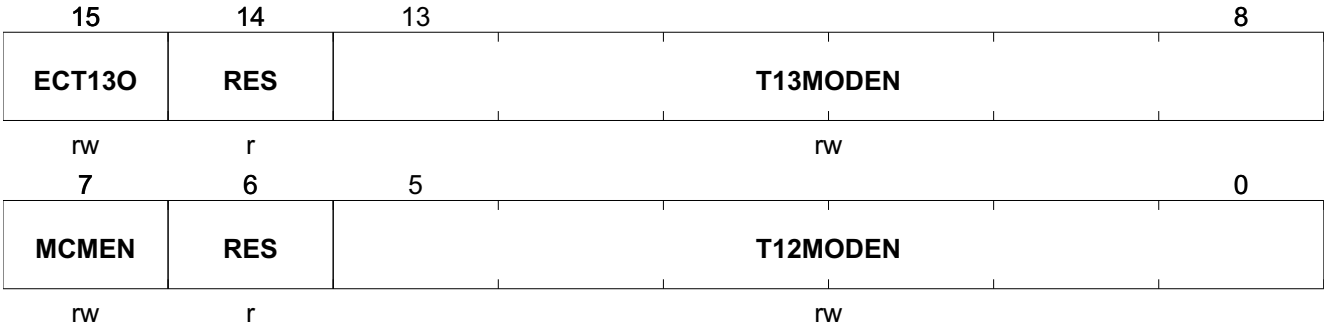

Field	Bits	Type	Description
ECT13O	15	rw	**Enable Compare Timer T13 Output** 0_B **Disabled** The alternate output function COUT63 is disabled. 1_B **Enabled** The alternate output function COUT63 is enabled for the PWM signal generated by T13.
RES	14	r	**Reserved** Returns 0 if read.
T13MODEN	13:8	rw	**T13 Modulation Enable** Setting these bits enables the modulation of the corresponding compare channel by a PWM pattern generated by timer T13. The bit positions are corresponding to the following output signals: Bit 0: modulation of CC60 Bit 1: modulation of COUT60 Bit 2: modulation of CC61 Bit 3: modulation of COUT61 Bit 4: modulation of CC62 Bit 5: modulation of COUT62 The enable feature of the modulation is defined as follows: 0_B **Disabled** The modulation of the corresponding output signal by a T13 PWM pattern is disabled. 1_B **Enabled** The modulation of the corresponding output signal by a T13 PWM pattern is enabled.

Field	Bits	Type	Description
MCMEN	7	rw	**Multi-Channel Mode Enable** 0_B **Disabled** The modulation of the corresponding output signal by a multi-channel pattern according to bit field MCMOUT is disabled. 1_B **Enabled** The modulation of the corresponding output signal by a multi-channel pattern according to bit field MCMOUT is enabled.
RES	6	r	**Reserved** Returns 0 if read.
T12MODEN	5:0	rw	**T12 Modulation Enable** Setting these bits enables the modulation of the corresponding compare channel by a PWM pattern generated by timer T12. The bit positions are corresponding to the following output signals: Bit 0: modulation of CC60 Bit 1: modulation of COUT60 Bit 2: modulation of CC61 Bit 3: modulation of COUT61 Bit 4: modulation of CC62 Bit 5: modulation of COUT62 The enable feature of the modulation is defined as follows: 0_B **Disabled** The modulation of the corresponding output signal by a T12 PWM pattern is disabled. 1_B **Enabled** The modulation of the corresponding output signal by a T12 PWM pattern is enabled.

Table 322 RESET of CCU6_MODCTR

Register Reset Type	Reset Values	Reset Short Name	Reset Mode	Note
RESET_TYPE_3	0000_H	RESET_TYPE_3		

The register TRPCTR controls the trap functionality. It contains independent enable bits for each output signal and control bits to select the behavior in case of a trap condition. The trap condition is a low-level on the $\overline{\text{CTRAP}}$ input pin, which is monitored (inverted level) by bit IS.TRPF. While TRPF = 1 (trap input active), the trap state bit IS.TRPS is set to 1.

CCU6_TRPCTR	Offset	Reset Value
Trap Control Register	60_H	see Table 323

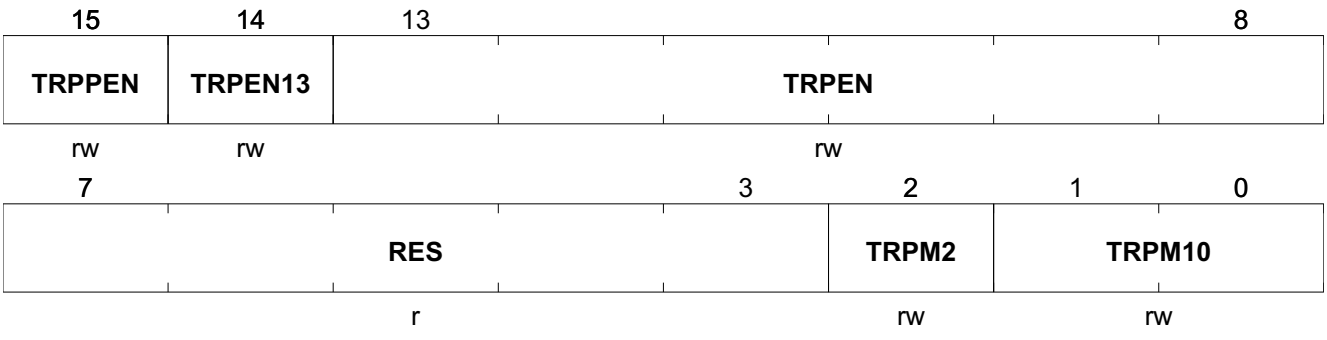

Field	Bits	Type	Description
TRPPEN	15	rw	**Trap Pin Enable** 0_B **Disabled** The trap functionality based on the input pin $\overline{\text{CTRAP}}$ is disabled. A trap can only be generated by software by setting bit TRPF. 1_B **Enabled** The trap functionality based on the input pin $\overline{\text{CTRAP}}$ is enabled. A trap can be generated by software by setting bit TRPF or by $\overline{\text{CTRAP}}$ = 0.
TRPEN13	14	rw	**Trap Enable Control for Timer T13** 0_B **Disabled** The trap functionality for T13 is disabled. Timer T13 (if selected and enabled) provides PWM functionality even while TRPS = 1. 1_B **Enabled** The trap functionality for T13 is enabled. The timer T13 PWM output signal is set to the passive state while TRPS = 1.
TRPEN	13:8	rw	**Trap Enable Control** Setting these bits enables the trap functionality for the following corresponding output signals: Bit 0: trap functionality of CC60 Bit 1: trap functionality of COUT60 Bit 2: trap functionality of CC61 Bit 3: trap functionality of COUT61 Bit 4: trap functionality of CC62 Bit 5: trap functionality of COUT62 The enable feature of the trap functionality is defined as follows: 0_B **Disabled** The trap functionality of the corresponding output signal is disabled. The output state is independent from bit TRPS. 1_B **Enabled** The trap functionality of the corresponding output signal is enabled. The output is set to the passive state while TRPS = 1.
RES	7:3	r	**Reserved** Returns 0 if read.
TRPM2	2	rw	**Trap Mode Control Bit 2** 0_B **Hardware reset** The trap state can be left (return to normal operation = bit TRPS = 0) as soon as the input $\overline{\text{CTRAP}}$ becomes inactive. Bit TRPF is automatically cleared by hardware if the input pin $\overline{\text{CTRAP}}$ becomes 1. Bit TRPS is automatically cleared by hardware if bit TRPF is 0 and if the synchronization condition (according to TRPM10) is detected. 1_B **Software reset** The trap state can be left (return to normal operation = bit TRPS = 0) as soon as bit TRPF is reset by software after the input $\overline{\text{CTRAP}}$ becomes inactive (TRPF is not cleared by hardware). Bit TRPS is automatically cleared by hardware if bit TRPF = 0 and if the synchronization condition (according to TRPM10) is detected.

Field	Bits	Type	Description
TRPM10	1:0	rw	**Trap Mode Control Bits 1, 0** These two bits define the behavior of the selected outputs when leaving the trap state after the trap condition has become inactive again. A synchronization to the timer driving the PWM pattern permits to avoid unintended short pulses when leaving the trap state. The combination (TRPM1, TRPM0) leads to: 00_B **T12 zero-match** The trap state is left (return to normal operation according to TRPM2) when a zero-match of T12 (while counting up) is detected (synchronization to T12). 01_B **T13 zero-match** The trap state is left (return to normal operation according to TRPM2) when a zero-match of T13 is detected (synchronization to T13). 10_B **Reserved** 11_B **Immediately** The trap state is left (return to normal operation according to TRPM2) immediately without any synchronization to T12 or T13.

Table 323 RESET of CCU6_TRPCTR

Register Reset Type	Reset Values	Reset Short Name	Reset Mode	Note
RESET_TYPE_3	0000_H	RESET_TYPE_3		

Table 324 Trap Mode Control Bits 1, 0

Field	Bits	Description
TRPM0, TRPM1	0 1	A synchronization to the timer driving the PWM pattern permits to avoid unintended short pulses when leaving the trap state. The combination (TRPM1, TRPM0) leads to: 00_B The trap state is left (return to normal operation according to TRPM2) when a zero-match of T12 (while counting up) is detected (synchronization to T12). 01_B The trap state is left (return to normal operation according to TRPM2) when a zero-match of T13 is detected (synchronization to T13). 10_B reserved 11_B The trap state is left (return to normal operation according to TRPM2) immediately without any synchronization to T12 or T13.

Register PSLR defines the passive state level driven by the output pins of the module. The passive state level is the value that is driven by the port pin during the passive state of the output. During the active state, the corresponding output pin drives the active state level, which is the inverted passive state level. The passive state level permits the adaptation of the driven output levels to the driver polarity (inverted, not inverted) of the connected power stage. The bits in this register have shadow bit fields to permit a concurrent update of all PWM-related parameters (bit field PSL is updated with T12_ST, whereas PSL63 is updated with T13_ST). The actually used values can be read (attribute “rh”), whereas the shadow bits can only be written (attribute “w”).

CCU6_PSLR	Offset	Reset Value
Passive State Level Register	**50_H**	**see Table 325**

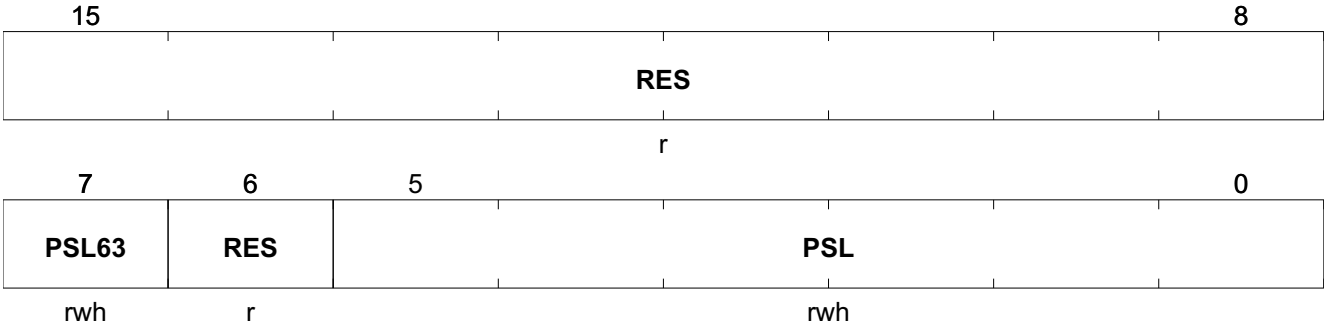

Field	Bits	Type	Description
RES	15:8	r	**Reserved**
PSL63	7	rwh	**Passive State Level of Output COUT63** This bit field defines the passive level of the output pin COUT63. 0_B **Level 0** The passive level is 0. 1_B **Level 1** The passive level is 1.
RES	6	r	**Reserved** Returns 0 if read.
PSL	5:0	rwh	**Compare Outputs Passive State Level** The bits of this bit field define the passive level driven by the module outputs during the passive state. The bit positions are: Bit 0: passive level for output CC60 Bit 1: passive level for output COUT60 Bit 2: passive level for output CC61 Bit 3: passive level for output COUT61 Bit 4: passive level for output CC62 Bit 5: passive level for output COUT62 The value of each bit position is defined as: 0_B **Level 0** The passive level is 0. 1_B **Level 1** The passive level is 1.

Table 325 RESET of CCU6_PSLR

Register Reset Type	Reset Values	Reset Short Name	Reset Mode	Note
RESET_TYPE_3	0000_H	RESET_TYPE_3		

Notes

1. *Bit field PSL has a shadow register to allow for updates without undesired pulses on the output lines. The bits are updated with the T12 shadow transfer. A read action targets the actually used values, whereas a write action targets the shadow bits.*
2. *Bit field PSL63 has a shadow register to allow for updates without undesired pulses on the output line. The bit is updated with the T13 shadow transfer. A read action targets the actually used values, whereas a write action targets the shadow bits.*

18.10.6 Multi-Channel Modulation Control Registers

Register MCMOUTS contains bits used as pattern input for the multi-channel mode and the Hall mode. This register is a shadow register (that can be read and written) for register MCMOUT, which indicates the currently active signals.

CCU6_MCMOUTS	Offset	Reset Value
Multi-Channel Mode Output Shadow Register	08_H	see Table 326

15	14	13	11	10	8
STRHP	RES	CURHS		EXPHS	
w	r	rw		rw	

7	6	5	0
STRMCM	RES	MCMPS	
w	r	rw	

Field	Bits	Type	Description
STRHP	15	w	**Shadow Transfer Request for the Hall Pattern** Setting these bits during a write action leads to an immediate update of bit fields CURH and EXPH by the value written to bit fields CURHS and EXPH. This functionality permits an update triggered by software. When read, this bit always delivers 0. 0_B **by Hardware** The bit fields CURH and EXPH are updated according to the defined hardware action. The write access to bit fields CURHS and EXPHS does not modify the bit fields CURH and EXPH. 1_B **by Software** The bit fields CURH and EXPH are updated by the value written to the bit fields CURHS and EXPHS.
RES	14	r	**Reserved** Returns 0 if read.
CURHS	13:11	rw	**Current Hall Pattern Shadow** Bit field CURHS is the shadow bit field for bit field CURH. The bit field is transferred to bit field CURH if an edge on the hall input pins CCPOSx (x = 0, 1, 2) is detected.

Field	Bits	Type	Description
EXPHS	10:8	rw	**Expected Hall Pattern Shadow** Bit field EXPHS is the shadow bit field for bit field EXPH. The bit field is transferred to bit field EXPH if an edge on the hall input pins CCPOSx (x = 0, 1, 2) is detected.
STRMCM	7	w	**Shadow Transfer Request for MCMPS** Setting this bit during a write action leads to an immediate update of bit field MCMP by the value written to bit field MCMPS. This functionality permits an update triggered by software. When read, this bit always delivers 0. 0_B **by Hardware** Bit field MCMP is updated according to the defined hardware action. The write access to bit field MCMPS does not modify bit field MCMP. 1_B **by Software** Bit field MCMP is updated by the value written to bit field MCMPS.
RES	6	r	**Reserved** Returns 0 if read.
MCMPS	5:0	rw	**Multi-Channel PWM Pattern Shadow** Bit field MCMPS is the shadow bit field for bit field MCMP. The multi-channel shadow transfer is triggered according to the transfer conditions defined by register MCMCTR.

Table 326 RESET of CCU6_MCMOUTS

Register Reset Type	Reset Values	Reset Short Name	Reset Mode	Note
RESET_TYPE_3	0000_H	RESET_TYPE_3		

Register MCMOUT shows the multi-channel control bits that are currently used. Register MCMOUT is defined as follows:

CCU6_MCMOUT	Offset	Reset Value
Multi-Channel Mode Output Register	64_H	see Table 327

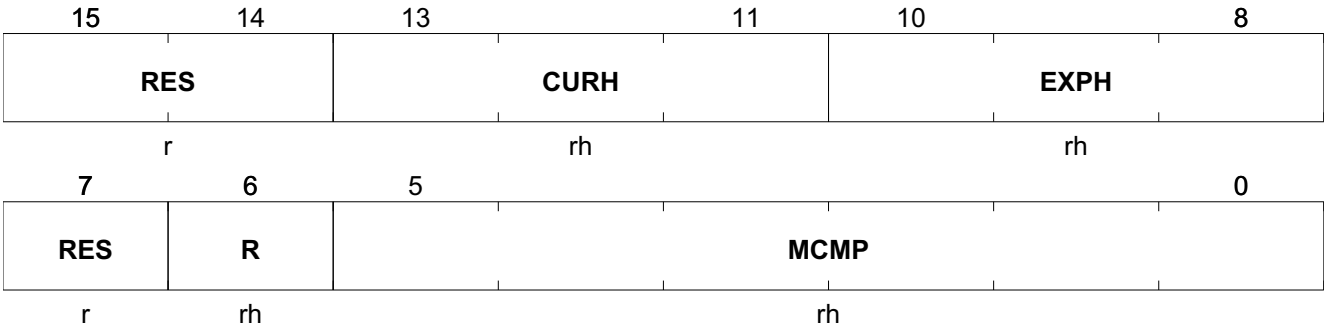

Field	Bits	Type	Description
RES	15:14	r	**Reserved** Returns 0 if read.
CURH	13:11	rh	**Current Hall Pattern** Bit field CURH is written by a shadow transfer from bit field CURHS.The contents are compared after every detected edge at the hall input pins with the pattern at the hall input pins in order to detect the occurrence of the next desired (= expected) hall pattern or a wrong pattern. If the current hall input pattern is equal to bit field CURH, the detected edge at the hall input pins has been an invalid transition (e.g. a spike).
EXPH	10:8	rh	**Expected Hall Pattern** Bit field EXPH is written by a shadow transfer from bit field EXPHS. The contents are compared after every detected edge at the hall input pins with the pattern at the hall input pins in order to detect the occurrence of the next desired (= expected) hall pattern or a wrong pattern. If the current hall pattern at the hall input pins is equal to the bit field EXPH, bit CHE (correct hall event) is set and an interrupt request is generated (if enabled by bit ENCHE). If the current hall pattern at the hall input pins is not equal to the bit fields CURH or EXPH, bit WHE (wrong hall event) is set and an interrupt request is generated (if enabled by bit ENWHE).
RES	7	r	**Reserved** Returns 0 if read.
R	6	rh	**Reminder Flag** This reminder flag indicates that the shadow transfer from bit field MCMPS to MCMP has been requested by the selected trigger source. This bit is cleared when the shadow transfer takes place and while MCMEN = 0. 0_B **No shadow transfer** Currently, no shadow transfer from MCMPS to MCMP is requested. 1_B **Shadow transfer** A shadow transfer from MCMPS to MCMP has been requested by the selected trigger source, but it has not yet been executed, because the selected synchronization condition has not yet occurred.

Field	Bits	Type	Description
MCMP	5:0	rh	**Multi-Channel PWM Pattern** Bit field MCMP is written by a shadow transfer from bit field MCMPS. It contains the output pattern for the multi-channel mode. If this mode is enabled by bit MCMEN in register MODCTR, the output state of the following output signal can be modified: Bit 0: multi-channel state for output CC60 Bit 1: multi-channel state for output COUT60 Bit 2: multi-channel state for output CC61 Bit 3: multi-channel state for output COUT61 Bit 4: multi-channel state for output CC62 Bit 5: multi-channel state for output COUT62 The multi-channel patterns can set the related output to the passive state. While IDLE = 1, bit field MCMP is cleared. 0_B **Passive** The output is set to the passive state. The PWM generated by T12 or T13 is not taken into account. 1_B **PWM** The output can deliver the PWM generated by T12 or T13 (according to register MODCTR).

Table 327 RESET of CCU6_MCMOUT

Register Reset Type	Reset Values	Reset Short Name	Reset Mode	Note
RESET_TYPE_3	0000_H	RESET_TYPE_3		

Note: The bits in the bit fields EXPH and CURH correspond to the hall patterns at the input pins CCPOSx (x = 0, 1, 2) in the following order (EXPH.2, EXPH.1, EXPH.0), (CURH.2, CURH.1, CURH.0), (CCPOS2, CCPOS.1, CCPOS0).

Register MCMCTR contains control bits for the multi-channel functionality.

CCU6_MCMCTR **Offset** **Reset Value**
Multi-Channel Mode Control Register **54_H** **see Table 328**

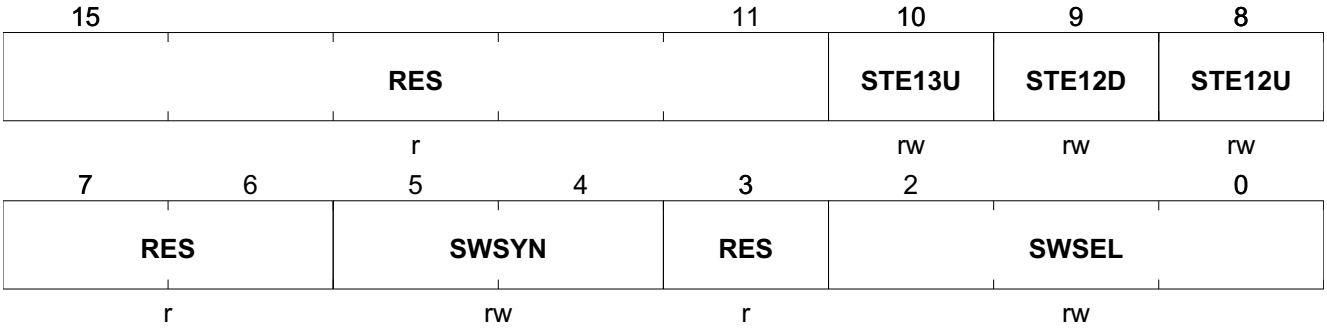

Field	Bits	Type	Description
RES	15:11	r	**Reserved**

Field	Bits	Type	Description
STE13U	10	rw	**Shadow Transfer Enable for T13 Upcounting** This bit enables the shadow transfer T13_ST if flag MCMOUT.R is set or becomes set while a T13 period match is detected. 0_B **No action** 1_B **Enabled** The T13_ST shadow transfer mechanism is enabled if MCMEN = 1.
STE12D	9	rw	**Shadow Transfer Enable for T12 Downcounting** This bit enables the shadow transfer T12_ST if flag MCMOUT.R is set or becomes set while a T12 one match is detected while counting down. 0_B **No action** 1_B **Enabled** The T12_ST shadow transfer mechanism is enabled if MCMEN = 1.
STE12U	8	rw	**Shadow Transfer Enable for T12 Upcounting** This bit enables the shadow transfer T12_ST if flag MCMOUT.R is set or becomes set while a T12 period match is detected while counting up. 0_B **No action** 1_B **Enabled** The T12_ST shadow transfer mechanism is enabled if MCMEN = 1.
RES	7:6	r	**Reserved** Returns 0 if read.
SWSYN	5:4	rw	**Switching Synchronization** Bit field SWSYN triggers the shadow transfer between MCMPS and MCMP if it has been requested before (flag R set by an event selected by SWSEL). This feature permits the synchronization of the outputs to the PWM source, that is used for modulation (T12 or T13). 00_B **Direct** the trigger event directly causes the shadow transfer 01_B **T13 zero-match** T13 zero-match triggers the shadow transfer 10_B **T12 zero-match** a T12 zero-match (while counting up) triggers the shadow transfer 11_B **Reserved** reserved; no action
RES	3	r	**Reserved**
SWSEL	2:0	rw	**Switching Selection** Bit field SWSEL selects one of the following trigger request sources (next multi-channel event) for the shadow transfer from MCMPS to MCMP. The trigger request is stored in the reminder flag R until the shadow transfer is done and flag R is cleared automatically with the shadow transfer. The shadow transfer takes place synchronously with an event selected in bit field SWSYN. 000_B **No request** no trigger request will be generated 001_B **Correct pattern** correct hall pattern on CCPOSx detected 010_B **T13 period-match** T13 period-match detected (while counting up) 011_B **T12 one-match** T12 one-match (while counting down) 100_B **T12 channel1 compare-match** T12 channel 1 compare-match detected (phase delay function) 101_B **T12 period-match** T12 period match detected (while counting up) else reserved, no trigger request will be generated

Table 328 RESET of CCU6_MCMCTR

Register Reset Type	Reset Values	Reset Short Name	Reset Mode	Note
RESET_TYPE_3	0000_H	RESET_TYPE_3		

18.10.7 Interrupt Control Registers

Register IS contains the individual interrupt request bits. This register can only be read; write actions have no impact on the contents of this register. The software can set or reset the bits individually by writing to the registers ISS (to set the bits) or to register ISR (to reset the bits).

The interrupt generation is independent from the value of the bits in register IS, e.g. the interrupt will be generated (if enabled) even if the corresponding bit is already set. The trigger for an interrupt generation is the detection of a set condition (by HW or SW) for the corresponding bit in register IS.

In compare mode (and hall mode), the timer-related interrupts are only generated while the timer is running (T1xR = 1). In capture mode, the capture interrupts are also generated while the timer T12 is stopped.

Note: Not all bits in register IS can generate an interrupt. Other status bits have been added, that have a similar structure for their set and clear actions. It is recommended that SW checks the interrupt bits bit-wisely (instead of common OR over the bits).

CCU6_IS	Offset	Reset Value
Capture/Compare Interrupt Status Register	68_H	see Table 329

15	14	13	12	11	10	9	8
STR	IDLE	WHE	CHE	TRPS	TRPF	T13PM	T13CM
rh	rh	rh	rh	rh	rh	rh	rh
7	6	5	4	3	2	1	0
T12PM	T12OM	ICC62F	ICC62R	ICC61F	ICC61R	ICC60F	ICC60R
rh	rh	rh	rh	rh	rh	rh	rh

Field	Bits	Type	Description
STR	15	rh	**Multi-Channel Mode Shadow Transfer Request** This bit is set when a shadow transfer from MCMOUTS to MCMOUT takes places in multi-channel mode. 0_B **No** The shadow transfer has not yet taken place. 1_B **Yes** The shadow transfer has taken place.
IDLE	14	rh	**IDLE State** This bit is set together with bit WHE (wrong hall event) and it must be reset by software. 0_B **No action** 1_B **Idle** Bit field MCMP is cleared and held to 0, the selected outputs are set to passive state.

Field	Bits	Type	Description
WHE	13	rh	**Wrong Hall Event** On every valid hall edge, the contents of EXPH are compared with the pattern on pin CCPOSx. If both comparisons (CURH and EXPH with CCPOSx) are not true, bit WHE (wrong hall event) is set. 0_B **Not detected** A transition to a wrong hall event (not the expected one) has not yet been detected since this bit has been reset for the last time. 1_B **Detected** A transition to a wrong hall event (not the expected one) has been detected.
CHE	12	rh	**Correct Hall Event** On every valid hall edge, the contents of EXPH are compared with the pattern on pin CCPOSx and if equal bit CHE is set. 0_B **Not detected** A transition to a correct (= expected) hall event has not yet been detected since this bit has been reset for the last time. 1_B **Detected** A transition to a correct (= expected) hall event has been detected.
TRPS	11	rh	**Trap State** During the trap state, the selected outputs are set to the passive state. The logic level driven during the passive state is defined by the corresponding bit in register PSLR. Bit TRPS = 1 and TRPF = 0 can occur if the trap condition is no longer active but the selected synchronization has not yet taken place. 0_B **Not active** The trap state is not active. 1_B **Active** The trap state is active. Bit TRPS is set while bit TRPF = 1. It is reset according to the mode selected in register TRPCTR.
TRPF	10	rh	**Trap Flag** The trap flag TRPF will be set by hardware if TRPPEN = 1 and $\overline{\text{CTRAP}}$ = 0 or by software. If TRPM2 = 0, bit TRPF is reset by hardware if the input $\overline{\text{CTRAP}}$ becomes inactive (TRPPEN = 1). If TRPM2 = 1, bit TRPF must be reset by software in order to leave the trap state. 0_B **Not detected** The trap condition has not been detected. 1_B **Detected** The trap condition has been detected (input $\overline{\text{CTRAP}}$ has been 0 or by software).
T13PM	9	rh	**Timer T13 Period-Match Flag** 0_B **Not detected** A timer T13 period-match has not yet been detected since this bit has been reset for the last time. 1_B **Detected** A timer T13 period-match has been detected.
T13CM	8	rh	**Timer T13 Compare-Match Flag** 0_B **Not detected** A timer T13 compare-match has not yet been detected since this bit has been reset for the last time. 1_B **Detected** A timer T13 compare-match has been detected.
T12PM	7	rh	**Timer T12 Period-Match Flag** 0_B **Not detected** A timer T12 period-match (while counting up) has not yet been detected since this bit has been reset for the last time. 1_B **Detected** A timer T12 period-match (while counting up) has been detected.

Field	Bits	Type	Description
T12OM	6	rh	**Timer T12 One-Match Flag** 0_B **Not detected** A timer T12 one-match (while counting down) has not yet been detected since this bit has been reset for the last time. 1_B **Detected** A timer T12 one-match (while counting down) has been detected.
ICC62F	5	rh	**Capture, Compare-Match Falling Edge Flag** In compare mode, a compare-match has been detected while T12 was counting down. In capture mode, a falling edge has been detected at the input CC62. 0_B **Not occurred** The event has not yet occurred since this bit has been reset for the last time. 1_B **Detected** The event described above has been detected.
ICC62R	4	rh	**Capture, Compare-Match Rising Edge Flag** In compare mode, a compare-match has been detected while T12 was counting up. In capture mode, a rising edge has been detected at the input CC62. 0_B **Not occurred** The event has not yet occurred since this bit has been reset for the last time. 1_B **Detected** The event described above has been detected.
ICC61F	3	rh	**Capture, Compare-Match Falling Edge Flag** In compare mode, a compare-match has been detected while T12 was counting down. In capture mode, a falling edge has been detected at the input CC61. 0_B **Not occurred** The event has not yet occurred since this bit has been reset for the last time. 1_B **Detected** The event described above has been detected.
ICC61R	2	rh	**Capture, Compare-Match Rising Edge Flag** In compare mode, a compare-match has been detected while T12 was counting up. In capture mode, a rising edge has been detected at the input CC61. 0_B **Not occurred** The event has not yet occurred since this bit has been reset for the last time. 1_B **Detected** The event described above has been detected.
ICC60F	1	rh	**Capture, Compare-Match Falling Edge Flag** In compare mode, a compare-match has been detected while T12 was counting down. In capture mode, a falling edge has been detected at the input CC60. 0_B **Not occurred** The event has not yet occurred since this bit has been reset for the last time. 1_B **Detected** The event described above has been detected.
ICC60R	0	rh	**Capture, Compare-Match Rising Edge Flag** In compare mode, a compare-match has been detected while T12 was counting up. In capture mode, a rising edge has been detected at the input CC60. 0_B **Not occurred** The event has not yet occurred since this bit has been reset for the last time. 1_B **Detected** The event described above has been detected.

Table 329 RESET of CCU6_IS

Register Reset Type	Reset Values	Reset Short Name	Reset Mode	Note
RESET_TYPE_3	0000_H	RESET_TYPE_3		

Register ISS contains individual interrupt request set bits to generate a CCU6 interrupt request by software. Writing a 1 sets the bit(s) in register IS at the corresponding bit position(s) and can generate an interrupt event (if available and enabled). All bit positions read as 0.

CCU6_ISS	Offset	Reset Value
Capture/Compare Interrupt Status Set Register	$4C_H$	see Table 330

15	14	13	12	11	10	9	8
SSTR	SIDLE	SWHE	SCHE	SWHC	STRPF	ST13PM	ST13CM
w	w	w	w	w	w	w	w
7	6	5	4	3	2	1	0
ST12PM	ST12OM	SCC62F	SCC62R	SCC61F	SCC61R	SCC60F	SCC60R
w	w	w	w	w	w	w	w

Field	Bits	Type	Description
SSTR	15	w	**Set STR Flag** 0_B **No action** 1_B **Set** Bit STR in register IS will be set.
SIDLE	14	w	**Set IDLE Flag** 0_B **No action** 1_B **Set** Bit IDLE in register IS will be set.
SWHE	13	w	**Set Wrong Hall Event Flag** 0_B **No action** 1_B **Set** Bit WHE in register IS will be set.
SCHE	12	w	**Set Correct Hall Event Flag** 0_B **No action** 1_B **Set** Bit CHE in register IS will be set.
SWHC	11	w	**Software Hall Compare** 0_B **No action** 1_B **Set** The Hall compare action is triggered.
STRPF	10	w	**Set Trap Flag** 0_B **No action** 1_B **Set** Bits TRPF and TRPS in register IS will be set.
ST13PM	9	w	**Set Timer T13 Period-Match Flag** 0_B **No action** 1_B **Set** Bit T13PM in register IS will be set.

Field	Bits	Type	Description
ST13CM	8	w	**Set Timer T13 Compare-Match Flag** 0_B **No action** 1_B **Set** Bit T13CM in register IS will be set.
ST12PM	7	w	**Set Timer T12 Period-Match Flag** 0_B **No action** 1_B **Set** Bit T12PM in register IS will be set.
ST12OM	6	w	**Set Timer T12 One-Match Flag** 0_B **No action** 1_B **Set** Bit T12OM in register IS will be set.
SCC62F	5	w	**Set Capture, Compare-Match Falling Edge Flag** 0_B **No action** 1_B **Set** Bit CC62F in register IS will be set.
SCC62R	4	w	**Set Capture, Compare-Match Rising Edge Flag** 0_B **No action** 1_B **Set** Bit CC62R in register IS will be set.
SCC61F	3	w	**Set Capture, Compare-Match Falling Edge Flag** 0_B **No action** 1_B **Set** Bit CC61F in register IS will be set.
SCC61R	2	w	**Set Capture, Compare-Match Rising Edge Flag** 0_B **No action** 1_B **Set** Bit CC61R in register IS will be set.
SCC60F	1	w	**Set Capture, Compare-Match Falling Edge Flag** 0_B **No action** 1_B **Set** Bit CC60F in register IS will be set.
SCC60R	0	w	**Set Capture, Compare-Match Rising Edge Flag** 0_B **No action** 1_B **Set** Bit CC60R in register IS will be set.

Table 330 RESET of CCU6_ISS

Register Reset Type	Reset Values	Reset Short Name	Reset Mode	Note
RESET_TYPE_3	0000_H	RESET_TYPE_3		

Register ISR contains bits to individually clear the interrupt event flags by software. Writing a 1 clears the bit(s) in register IS at the corresponding bit position(s). All bit positions read as 0.

CCU6_ISR	Offset	Reset Value
Capture/Compare Interrupt Status Reset Register	**$0C_H$**	**see Table 331**

15	14	13	12	11	10	9	8
RSTR	**RIDLE**	**RWHE**	**RCHE**	**RES**	**RTRPF**	**RT13PM**	**RT13CM**
w	w	w	w	r	w	w	w
7	6	5	4	3	2	1	0
RT12PM	**RT12OM**	**RCC62F**	**RCC62R**	**RCC61F**	**RCC61R**	**RCC60F**	**RCC60R**
w	w	w	w	w	w	w	w

Field	Bits	Type	Description
RSTR	15	w	**Reset STR Flag** 0_B **No action** 1_B **Reset** Bit STR in register IS will be reset.
RIDLE	14	w	**Reset IDLE Flag** 0_B **No action** 1_B **Reset** Bit IDLE in register IS will be reset.
RWHE	13	w	**Reset Wrong Hall Event Flag** 0_B **No action** 1_B **Reset** Bit WHE in register IS will be reset.
RCHE	12	w	**Reset Correct Hall Event Flag** 0_B **No action** 1_B **Reset** Bit CHE in register IS will be reset.
RES	11	r	**Reserved** Returns 0 if read.
RTRPF	10	w	**Reset Trap Flag** 0_B **No action** 1_B **Reset** Bit TRPF in register IS will be reset (not taken into account while input $\overline{\text{CTRAP}}$ = 0 and TRPPEN = 1.
RT13PM	9	w	**Reset Timer T13 Period-Match Flag** 0_B **No action** 1_B **Reset** Bit T13PM in register IS will be reset.
RT13CM	8	w	**Reset Timer T13 Compare-Match Flag** 0_B **No action** 1_B **Reset** Bit T13CM in register IS will be reset.
RT12PM	7	w	**Reset Timer T12 Period-Match Flag** 0_B **No action** 1_B **Reset** Bit T12PM in register IS will be reset.
RT12OM	6	w	**Reset Timer T12 One-Match Flag** 0_B **No action** 1_B **Reset** Bit T12OM in register IS will be reset.
RCC62F	5	w	**Reset Capture, Compare-Match Falling Edge Flag** 0_B **No action** 1_B **Reset** Bit CC62F in register IS will be reset.

Field	Bits	Type	Description
RCC62R	4	w	**Reset Capture, Compare-Match Rising Edge Flag** 0_B **No action** 1_B **Reset** Bit CC62R in register IS will be reset.
RCC61F	3	w	**Reset Capture, Compare-Match Falling Edge Flag** 0_B **No action** 1_B **Reset** Bit CC61F in register IS will be reset.
RCC61R	2	w	**Reset Capture, Compare-Match Rising Edge Flag** 0_B **No action** 1_B **Reset** Bit CC61R in register IS will be reset.
RCC60F	1	w	**Reset Capture, Compare-Match Falling Edge Flag** 0_B **No action** 1_B **Reset** Bit CC60F in register IS will be reset.
RCC60R	0	w	**Reset Capture, Compare-Match Rising Edge Flag** 0_B **No action** 1_B **Reset** Bit CC60R in register IS will be reset.

Table 331 RESET of CCU6_ISR

Register Reset Type	Reset Values	Reset Short Name	Reset Mode	Note
RESET_TYPE_3	0000_H	RESET_TYPE_3		

Register IEN contains the interrupt enable bits and a control bit to enable the automatic idle function in the case of a wrong hall pattern.

CCU6_IEN — **Offset** — **Reset Value**

Capture/Compare Interrupt Enable Register — **44_H** — **see Table 332**

15	14	13	12	11	10	9	8
ENSTR	**ENIDLE**	**ENWHE**	**ENCHE**	**RES**	**ENTRPF**	**ENT13PM**	**ENT13CM**
rw	rw	rw	rw	r	rw	rw	rw
7	6	5	4	3	2	1	0
ENT12PM	**ENT12OM**	**ENCC62F**	**ENCC62R**	**ENCC61F**	**ENCC61R**	**ENCC60F**	**ENCC60R**
rw	rw	rw	rw	rw	rw	rw	rw

Field	Bits	Type	Description
ENSTR	15	rw	**Enable Multi-Channel Mode Shadow Transfer Interrupt** 0_B **No interrupt** No interrupt will be generated if the set condition for bit STR in register IS occurs. 1_B **Interrupt** An interrupt will be generated if the set condition for bit STR in register IS occurs. The interrupt line that will be activated is selected by bit field INPCHE.

Field	Bits	Type	Description
ENIDLE	14	rw	**Enable Idle** This bit enables the automatic entering of the idle state (bit IDLE will be set) after a wrong hall event has been detected (bit WHE is set). During the idle state, the bit field MCMP is automatically cleared. 0_B **IDLE not set** The bit IDLE is not automatically set when a wrong hall event is detected. 1_B **IDLE set** The bit IDLE is automatically set when a wrong hall event is detected.
ENWHE	13	rw	**Enable Interrupt for Wrong Hall Event** 0_B **No interrupt** No interrupt will be generated if the set condition for bit WHE in register IS occurs. 1_B **Interrupt** An interrupt will be generated if the set condition for bit WHE in register IS occurs. The interrupt line that will be activated is selected by bit field INPERR.
ENCHE	12	rw	**Enable Interrupt for Correct Hall Event** 0_B **No interrupt** No interrupt will be generated if the set condition for bit CHE in register IS occurs. 1_B **Interrupt** An interrupt will be generated if the set condition for bit CHE in register IS occurs. The interrupt line that will be activated is selected by bit field INPCHE.
RES	11	r	**Reserved** Returns 0 if read.
ENTRPF	10	rw	**Enable Interrupt for Trap Flag** 0_B **No interrupt** No interrupt will be generated if the set condition for bit TRPF in register IS occurs. 1_B **Interrupt** An interrupt will be generated if the set condition for bit TRPF in register IS occurs. The interrupt line that will be activated is selected by bit field INPERR.
ENT13PM	9	rw	**Enable Interrupt for T13 Period-Match** 0_B **No interrupt** No interrupt will be generated if the set condition for bit T13PM in register IS occurs. 1_B **Interrupt** An interrupt will be generated if the set condition for bit T13PM in register IS occurs. The interrupt line that will be activated is selected by bit field INPT13.
ENT13CM	8	rw	**Enable Interrupt for T13 Compare-Match** 0_B **No interrupt** No interrupt will be generated if the set condition for bit T13CM in register IS occurs. 1_B **Interrupt** An interrupt will be generated if the set condition for bit T13CM in register IS occurs. The interrupt line that will be activated is selected by bit field INPT13.
ENT12PM	7	rw	**Enable Interrupt for T12 Period-Match** 0_B **No interrupt** No interrupt will be generated if the set condition for bit T12PM in register IS occurs. 1_B **Interrupt** An interrupt will be generated if the set condition for bit T12PM in register IS occurs. The interrupt line that will be activated is selected by bit field INPT12.

Field	Bits	Type	Description
ENT12OM	6	rw	**Enable Interrupt for T12 One-Match** 0_B **No interrupt** No interrupt will be generated if the set condition for bit T12OM in register IS occurs. 1_B **Interrupt** An interrupt will be generated if the set condition for bit T12OM in register IS occurs. The interrupt line that will be activated is selected by bit field INPT12.
ENCC62F	5	rw	**Capture, Compare-Match Falling Edge Interrupt Enable for Channel 2** 0_B **No interrupt** No interrupt will be generated if the set condition for bit CC62F in register IS occurs. 1_B **Interrupt** An interrupt will be generated if the set condition for bit CC62F in register IS occurs. The interrupt line that will be activated is selected by bit field INPCC62.
ENCC62R	4	rw	**Capture, Compare-Match Rising Edge Interrupt Enable for Channel 2** 0_B **No interrupt** No interrupt will be generated if the set condition for bit CC62R in register IS occurs. 1_B **Interrupt** An interrupt will be generated if the set condition for bit CC62R in register IS occurs. The interrupt line that will be activated is selected by bit field INPCC62.
ENCC61F	3	rw	**Capture, Compare-Match Falling Edge Interrupt Enable for Channel 1** 0_B **No interrupt** No interrupt will be generated if the set condition for bit CC61F in register IS occurs. 1_B **Interrupt** An interrupt will be generated if the set condition for bit CC61F in register IS occurs. The interrupt line that will be activated is selected by bit field INPCC61.
ENCC61R	2	rw	**Capture, Compare-Match Rising Edge Interrupt Enable for Channel 1** 0_B **No interrupt** No interrupt will be generated if the set condition for bit CC61R in register IS occurs. 1_B **Interrupt** An interrupt will be generated if the set condition for bit CC61R in register IS occurs. The interrupt line that will be activated is selected by bit field INPCC61.
ENCC60F	1	rw	**Capture, Compare-Match Falling Edge Interrupt Enable for Channel 0** 0_B **No interrupt** No interrupt will be generated if the set condition for bit CC60F in register IS occurs. 1_B **Interrupt** An interrupt will be generated if the set condition for bit CC60F in register IS occurs. The interrupt line that will be activated is selected by bit field INPCC60.
ENCC60R	0	rw	**Capture, Compare-Match Rising Edge Interrupt Enable for Channel 0** 0_B **No interrupt** No interrupt will be generated if the set condition for bit CC60R in register IS occurs. 1_B **Interrupt** An interrupt will be generated if the set condition for bit CC60R in register IS occurs. The interrupt line that will be activated is selected by bit field INPCC60.

Table 332 RESET of CCU6_IEN

Register Reset Type	Reset Values	Reset Short Name	Reset Mode	Note
RESET_TYPE_3	0000_H	RESET_TYPE_3		

Register INP contains the interrupt node pointers allowing a flexible interrupt handling. These bit fields define which service request output will be activated if the corresponding interrupt event occurs and the interrupt generation for this event is enabled.

CCU6_INP	Offset	Reset Value
Capture/Compare Interrupt Node Pointer Register	48_H	see Table 333

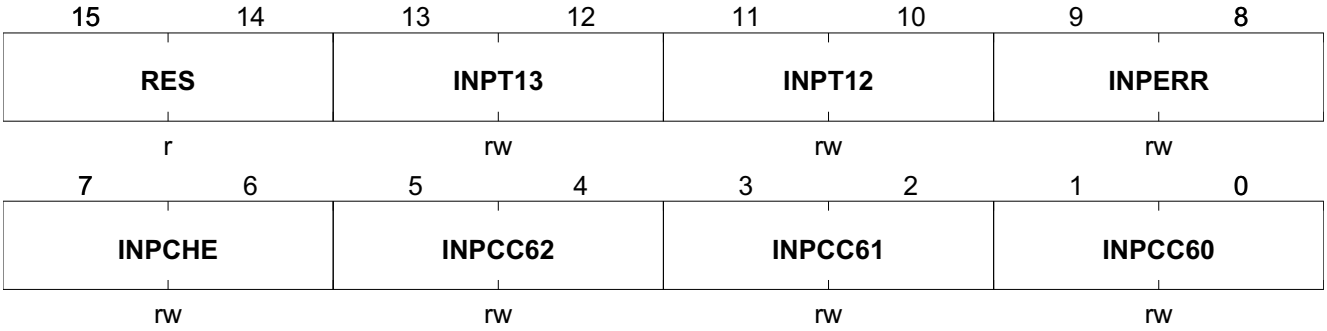

Field	Bits	Type	Description
RES	15:14	r	**Reserved** Returns 0 if read.
INPT13	13:12	rw	**Interrupt Node Pointer for Timer T13 Interrupts** This bit field defines the interrupt output line, which is activated due to a set condition for bit T13CM (if enabled by bit ENT13CM) or for bit T13PM (if enabled by bit ENT13PM). 00_B **SR0** Interrupt output line SR0 is selected. 01_B **SR1** Interrupt output line SR1 is selected. 10_B **SR2** Interrupt output line SR2 is selected. 11_B **SR3** Interrupt output line SR3 is selected.
INPT12	11:10	rw	**Interrupt Node Pointer for Timer T12 Interrupts** This bit field defines the interrupt output line, which is activated due to a set condition for bit T12OM (if enabled by bit ENT12OM) or for bit T12PM (if enabled by bit ENT12PM). 00_B **SR0** Interrupt output line SR0 is selected. 01_B **SR1** Interrupt output line SR1 is selected. 10_B **SR2** Interrupt output line SR2 is selected. 11_B **SR3** Interrupt output line SR3 is selected.

Field	Bits	Type	Description
INPERR	9:8	rw	**Interrupt Node Pointer for Error Interrupts** This bit field defines the interrupt output line, which is activated due to a set condition for bit TRPF (if enabled by bit ENTRPF) or for bit WHE (if enabled by bit ENWHE). 00_B **SR0** Interrupt output line SR0 is selected. 01_B **SR1** Interrupt output line SR1 is selected. 10_B **SR2** Interrupt output line SR2 is selected. 11_B **SR3** Interrupt output line SR3 is selected.
INPCHE	7:6	rw	**Interrupt Node Pointer for the CHE Interrupt** This bit field defines the interrupt output line, which is activated due to a set condition for bit CHE (if enabled by bit ENCHE) or for bit STR (if enabled by bit ENSTR). 00_B **SR0** Interrupt output line SR0 is selected. 01_B **SR1** Interrupt output line SR1 is selected. 10_B **SR2** Interrupt output line SR2 is selected. 11_B **SR3** Interrupt output line SR3 is selected.
INPCC62	5:4	rw	**Interrupt Node Pointer for Channel 2 Interrupts** This bit field defines the interrupt output line, which is activated due to a set condition for bit CC62R (if enabled by bit ENCC62R) or for bit CC62F (if enabled by bit ENCC62F). 00_B **SR0** Interrupt output line SR0 is selected. 01_B **SR1** Interrupt output line SR1 is selected. 10_B **SR2** Interrupt output line SR2 is selected. 11_B **SR3** Interrupt output line SR3 is selected.
INPCC61	3:2	rw	**Interrupt Node Pointer for Channel 1 Interrupts** This bit field defines the interrupt output line, which is activated due to a set condition for bit CC61R (if enabled by bit ENCC61R) or for bit CC61F (if enabled by bit ENCC61F). 00_B **SR0** Interrupt output line SR0 is selected. 01_B **SR1** Interrupt output line SR1 is selected. 10_B **SR2** Interrupt output line SR2 is selected. 11_B **SR3** Interrupt output line SR3 is selected.
INPCC60	1:0	rw	**Interrupt Node Pointer for Channel 0 Interrupts** This bit field defines the interrupt output line, which is activated due to a set condition for bit CC60R (if enabled by bit ENCC60R) or for bit CC60F (if enabled by bit ENCC60F). 00_B **SR0** Interrupt output line SR0 is selected. 01_B **SR1** Interrupt output line SR1 is selected. 10_B **SR2** Interrupt output line SR2 is selected. 11_B **SR3** Interrupt output line SR3 is selected.

Table 333 RESET of CCU6_INP

Register Reset Type	Reset Values	Reset Short Name	Reset Mode	Note
RESET_TYPE_3	3940_H	RESET_TYPE_3		

18.11 TLE984xQX Module Implementation Details

This section describes the CCU6 module interfaces with the clock control, port connections, interrupt control, and address decoding.

18.11.1 Interfaces of the CCU6 Module

An overview of the CCU6 kernel I/O interface is shown in **Figure 163**.

The Bus Peripheral Interface (BPI) enables the CCU6 kernel to be attached to the 8-bit Bus. The BPI consists of a clock control logic which gates the clock input to the kernel, and an address decoder for Special Function Registers (SFRs) in the CCU6 kernel.

The interrupt lines of the CCU6 are connected to the CPU interrupt controller via the SCU. An interrupt pulse can be generated at one of the four interrupt output lines SRCx (x=0 to 4) of the module. More than one CCU6 interrupt source can be connected to each CCU6 interrupt line.

The General Purpose IO (GPIO) Ports provide the interface from the CCU6 to the external world. Please refer to **Chapter 15** for Port implementation details.

The CCU6 kernel is clocked on PCLK frequency where $f_{CCU} = f_{PCLK}$.

Debug Suspend of Timers

The timers of CCU6, T12 and T13, can be suspended immediately when OCDS enters Monitor Mode and has the Debug-Suspend signal activated – provided the respective timer suspend bits, T12SUSP and T13SUSP (in SCU SFR MODSUSP), are set. When suspended, the respective timer stops and its PWM outputs enabled for the trap condition (**CCU6_TRPCTR**.TRPENx = 1) are set to respective passive levels (similar to TRAP state). In addition, all CCU6 inputs are frozen. Refer to SCU **Chapter 7.10** and OCDS chapter.

Flexible Peripheral Management (Kernel Clock Gating) of CCU6

When not in use, the CCU6 kernel may be disabled where the kernel clock input is gated. When the **SCU_PMCON**.CCU_DIS request bit is set, both T12 and T13 are immediately stopped and PWM outputs enabled for the trap condition (**CCU6_TRPCTR**.TRPENx = 1) are set to respective passive levels (similar to TRAP state). In addition, all CCU6 inputs are frozen. Finally, the kernel clock input is gated. Refer to SCU **Chapter 7.9**.

Table 334 CCU6/T21CCU Interconnection

CCU6 Input	T21CCU Output
T12HRD	**T21CCU_CCTCON**.CCTST
T13HRD	**T21CCU_CCTCON**.CCTST

Figure 163 shows all interrupt and interface signals and GPIO interface associated with the CCU6 module kernel.

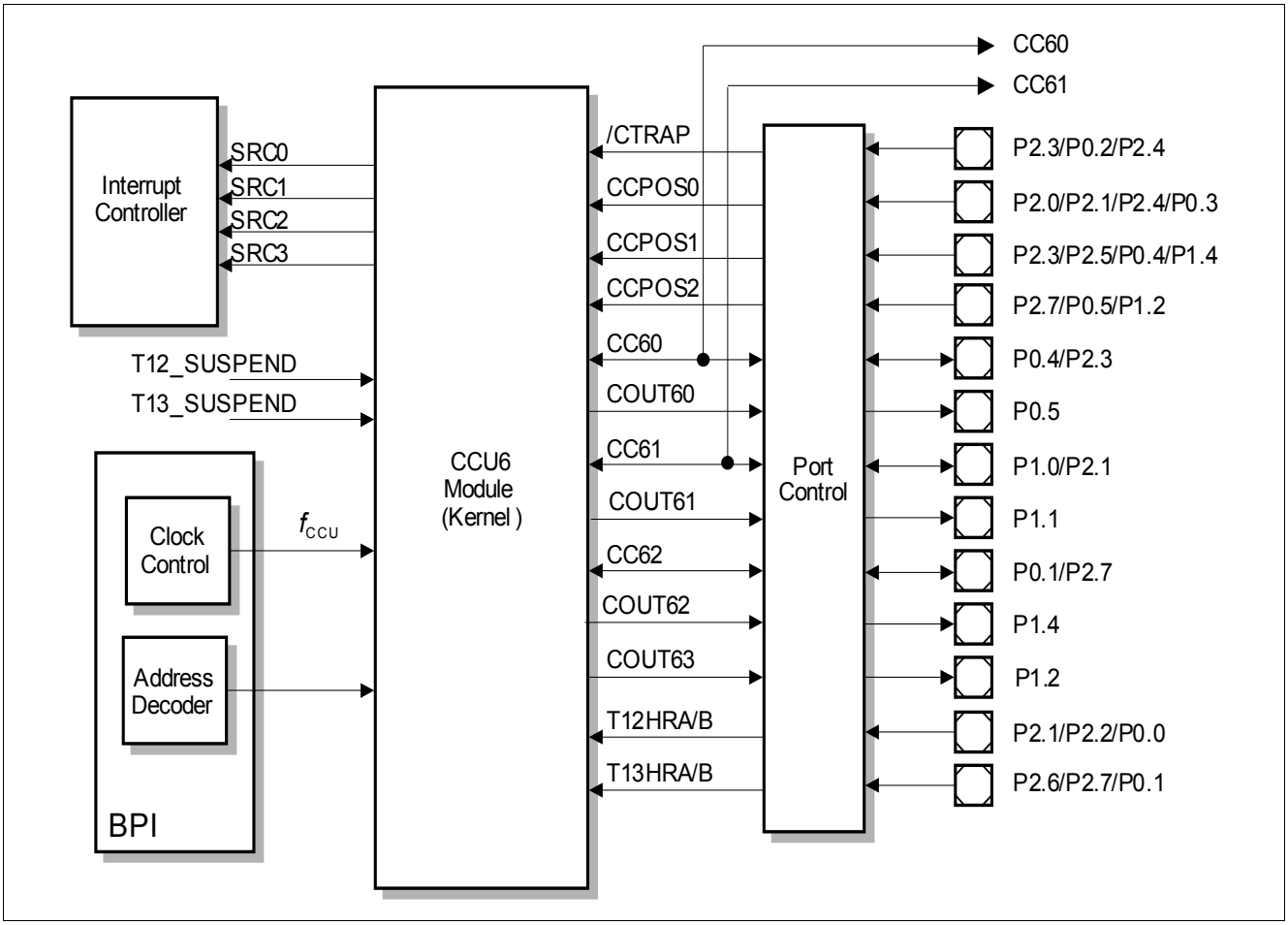

Figure 163 Interconnections of the CCU6 Module

19 UART1/UART2

19.1 Features

- Full-duplex asynchronous modes
  - 8-Bit or 9-Bit data frames, LSB first
  - fixed or variable baud rate
- Receive buffered (1 Byte)
- Multiprocessor communication
- Interrupt generation on the completion of a data transmission or reception
- Baud-rate generator with fractional divider for generating a wide range of baud rates, e.g. 9.6kBaud, 19.2kBaud, 115.2kBaud, 125kBaud, 250kBaud, 500kBaud
- Hardware logic for break and sync byte detection
- for UART1: LIN support: connected to timer channel for synchronization to LIN baud rate

In all modes, transmission is initiated by any instruction that uses SBUF as a destination register. Reception is initiated in the modes by the incoming start bit if REN = 1.

The serial interface also provides interrupt requests when transmission or reception of the frames has been completed. The corresponding interrupt request flags are TI or RI, respectively. If the serial interrupt is not used (i.e., serial interrupt not enabled), TI and RI can also be used for polling the serial interface.

19.2 Introduction

The UART1/UART2 provide a full-duplex asynchronous receiver/transmitter, i.e., it can transmit and receive simultaneously. They are also receive-buffered, i.e., they can commence reception of a second byte before a previously received byte has been read from the receive register. However, if the first byte still has not been read by the time reception of the second byte is complete, the previous byte will be lost. The serial port receive and transmit registers are both accessed at Special Function Register (SFR) SBUF. Writing to SBUF loads the transmit register, and reading SBUF accesses a physically separate receive register.

19.2.1 Block Diagram

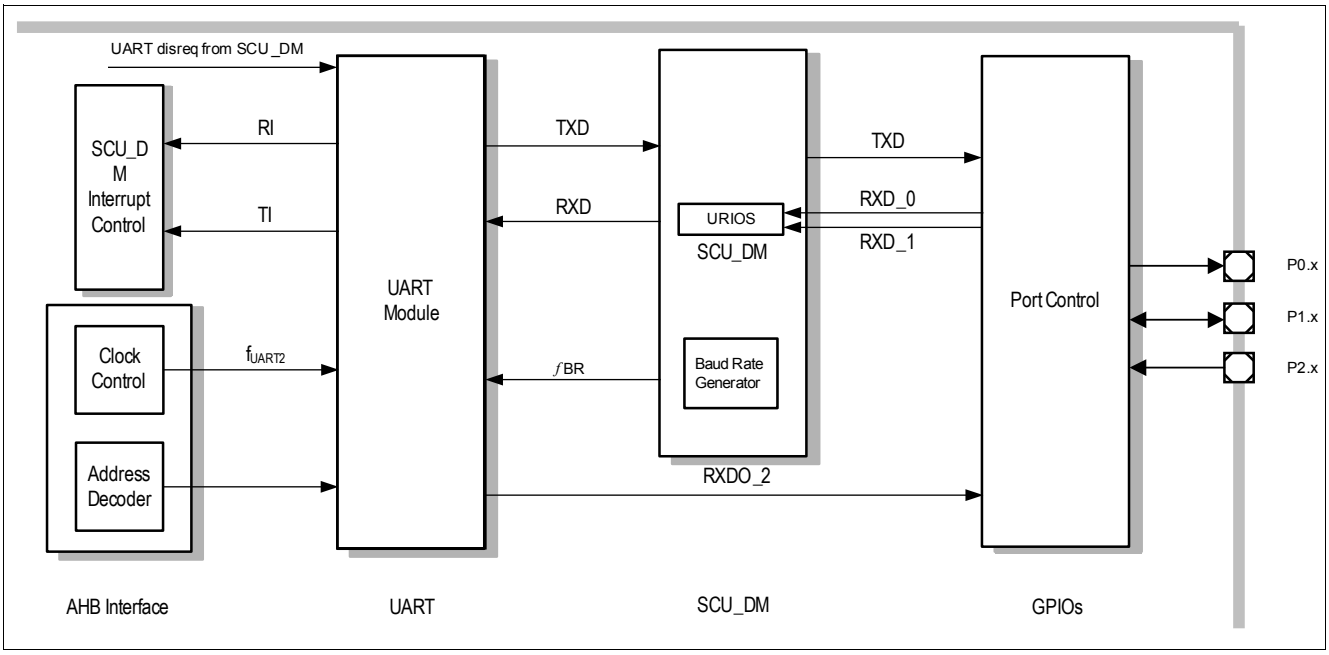

Figure 164 UART Block Diagram

19.3 UART Modes

The UART1/UART2 can be used in four different modes. In mode 0, it operates as an 8-Bit shift register. In mode 1, it operates as an 8-Bit serial port. In modes 2 and 3, it operates as a 9-Bit serial port. The only difference between mode 2 and mode 3 is the baud rate, which is fixed in mode 2 but variable in mode 3. The variable baud rate is set by the underflow rate on the dedicated baud-rate generator.

The different modes are selected by setting bits SM0 and SM1 to their corresponding values, as shown in **Table 335**.

Mode 1 example: 8 data bits, 1 start bit, 1 stop bit, no parity selection, 16 times oversampled (majority decision of bits 6, 7, 8), receive & transmit register double buffered, Tx/Rx IRQ(s).

Table 335 UART Modes

SM0	SM1	Operating Mode	Baud Rate
0	0	Mode 0: 8-Bit shift register	$f_{sys}/2$
0	1	Mode 1: 8-Bit shift UART	Variable
1	0	Mode 2: 9-Bit shift UART	$f_{sys}/64$ or $f_{sys}/32$
1	1	Mode 3: 9-Bit shift UART	Variable

19.3.1 Mode 0, 8-Bit Shift Register, Fixed Baud Rate

In mode 0, the serial port behaves as an 8-bit shift register. Data is shifted in through RXD, and out through RXDO, while the TXD line is used to provide a shift clock which can be used by external devices to clock data in and out.

The transmission cycle is activated by a write to SBUF. The data will be written to the transmit shift register with a 1 at the 9th bit position . For the next seven machine cycles, the contents of the transmit shift register are shifted right one position and a zero shifted in from the left so that when the MSB of the data byte is at the output position, it has a 1 and a sequence of zeros to its left. The control block then executes one last shift before setting the TI bit.

Reception is started by the condition REN = 1 and RI = 0. At the start of the reception cycle, 1111111_B is written to the receive shift register. In each machine cycle that follows, the contents of the shift register are shifted left one position and the value sampled on the RXD line in the same machine cycle is shifted in from the right. When the 0 of the initial byte reaches the leftmost position, the control block executes one last shift, loads SBUF and sets the RI bit.

The baud rate for the transfer is fixed at $f_{sys}/2$ where f_{sys} is the input clock frequency, i.e. one bit per machine cycle.

19.3.2 Mode 1, 8-Bit UART, Variable Baud Rate

In mode 1, the UART behaves as an 8-bit serial port. A start bit (0), 8 data bits, and a stop bit (1) are transmitted on TXD or received on RXD at a variable baud rate.

The transmission cycle is activated by a write to SBUF. The data are transferred to the transmit shift register and a 1 is loaded to the 9th bit position (as in mode 0) . At phase 1 of the machine cycle after the next rollover in the divide-by-16 counter, the start bit is copied to TXD, and data is activated one bit time later. One bit time after the data is activated, the data starts getting shifted right with zeros shifted in from the left. When the MSB gets to the output position, the control block executes one last shift and sets the TI bit.

Reception is started by a high to low transition on RXD (sampled at 16 times the baud rate). The divide-by-16 counter is then reset and $1111\ 1111_B$ is written to the receive register. If a valid start bit (0) is then detected (based on two out of three samples), it is shifted into the register followed by 8 data bits. If the transition is not followed by a valid start bit, the controller goes back to looking for a high to low transition on RXD. When the start bit reaches the leftmost position, the control block executes one last shift, then loads SBUF with the 8 data bits, loads RB8 (SCON.2) with the stop bit, and sets the RI bit, provided RI = 0 (SCON.0), and either SM2 = 0 (SCON.5) (see **Section 19.4**) or the received stop bit = 1. If none of these conditions is met, the received byte is lost.

The associated timings for transmit/receive in mode 1 are illustrated in **Figure 165**.

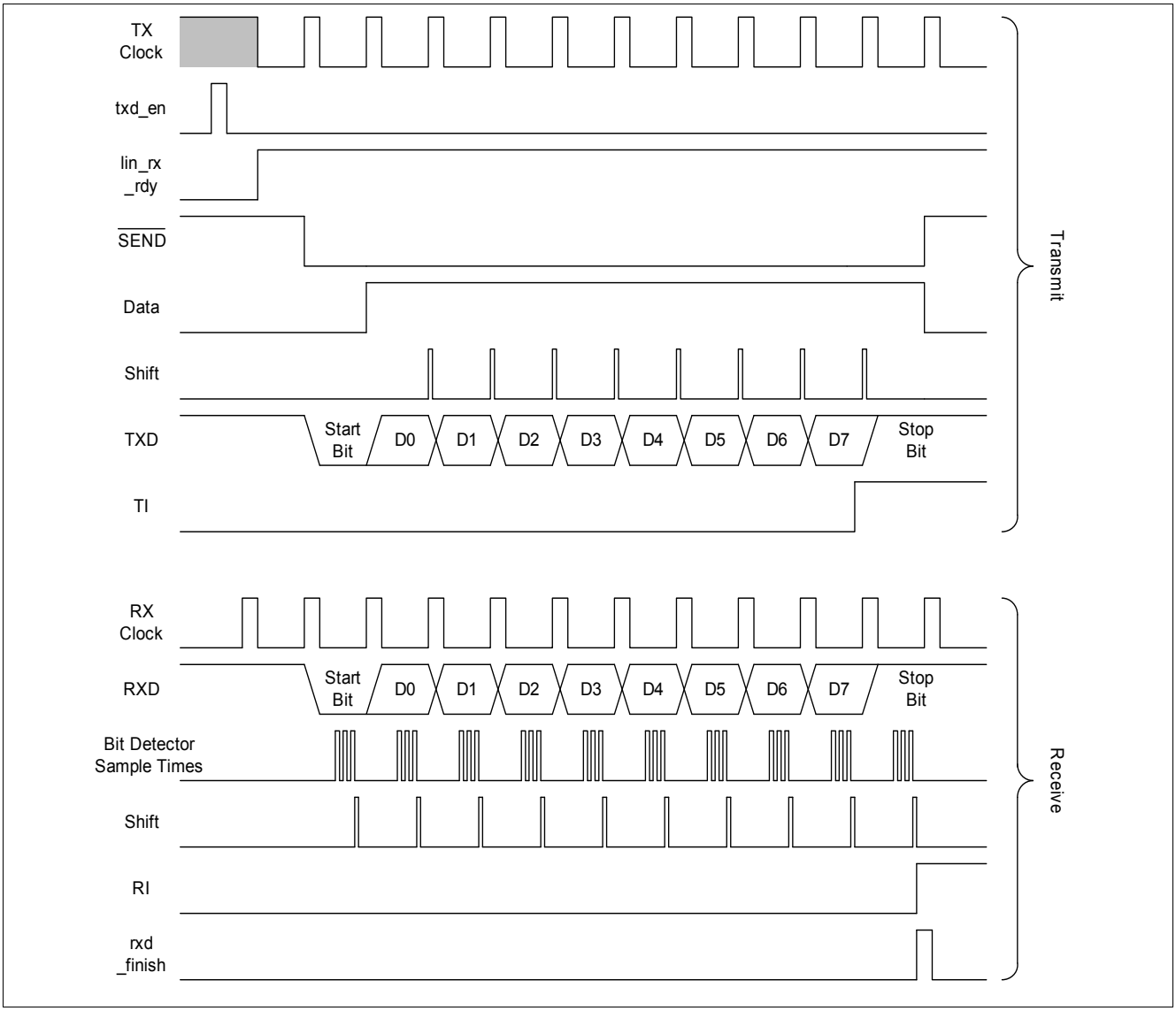

Figure 165 Serial Interface, Mode 1, Timing Diagram

19.3.3 Mode 2, 9-Bit UART, Fixed Baud Rate

In mode 2, the UART behaves as a 9-bit serial port. A start bit (0), 8 data bits plus a programmable 9th bit and a stop bit (1) are transmitted on TXD or received on RXD. The 9th bit for transmission is taken from TB8 (SCON.3) while for reception, the 9th bit received is placed in RB8 (SCON.2).

The transmission cycle is activated by a write to SBUF. The data is transferred to the transmit shift register and TB8 is copied into the 9th bit position. At phase 1 of the machine cycle following the next rollover in the divide-by-16 counter, the start bit is copied to TXD and data is activated one bit time later. One bit time after the data is activated, the data starts shifting right. For the first shift, a stop bit (1) is shifted in from the left and for subsequent shifts, zeros are shifted in. When the TB8 bit gets to the output position, the control block executes one last shift and sets the TI bit.

Reception is started by a high to low transition on RXD (sampled at 16 times of the baud rate). The divide-by-16 counter is then reset and 1111 1111_B is written to the receive register. If a valid start bit (0) is then detected (based on two out of three samples), it is shifted into the register followed by 8 data bits. If the transition is not followed by a valid start bit, the controller goes back to looking for a high to low transition on RXD. When the start bit reaches the leftmost position, the control block executes one last shift, then loads SBUF with the 8 data bits, loads RB8 (SCON.2) with the 9th data bit, and sets the RI bit, provided RI = 0 (SCON.0), and either SM2 = 0 (SCON.5) (see **Section 19.4**) or the 9th bit = 1. If none of these conditions is met, the received byte is lost.

The baud rate for the transfer is fixed at f_{sys}/64 or f_{sys}/32.

19.3.4 Mode 3, 9-Bit UART, Variable Baud Rate

Mode 3 is the same as mode 2 in all respects except that the baud rate is variable.

The associated timings for transmit/receive in modes 2 and 3 are illustrated in **Figure 166**.

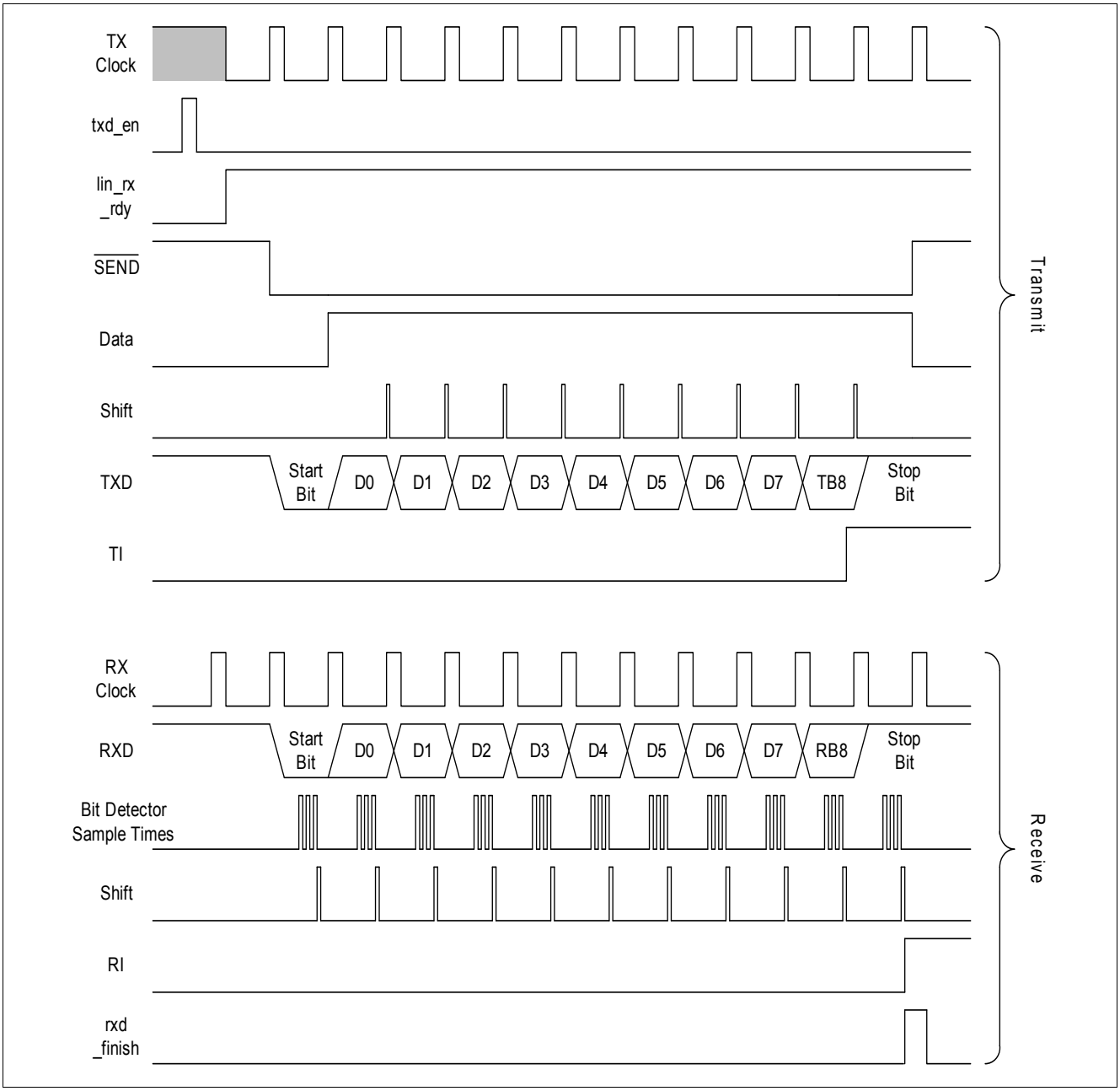

Figure 166 Serial Interface, Modes 2 and 3, Timing Diagram

19.4 Multiprocessor Communication

Modes 2 and 3 have a special provision for multiprocessor communication using a system of address bytes with bit 9 = 1 and data bytes with bit 9 = 0. In these modes, 9 data bits are received. The 9th data bit goes into RB8 (SCON.2). The communication always ends with one stop bit. The port can be programmed such that when the stop bit is received, the serial port interrupt will be activated only if RB8 = 1.

This feature is enabled by setting bit SM2 in register SCON. One of the ways to use this feature in multiprocessor systems is described in the following paragraph.

When the master processor wants to transmit a block of data to one of several slaves, it first sends out an address byte that identifies the target slave. An address byte differs from a data byte in the 9th bit. The 9th bit in an address byte is 1 and in a data byte the 9th bit is 0. With SM2 = 1, no slave will be interrupted by a data byte. An address byte, however, will interrupt all slaves, so that each slave can examine the received byte and see if it is being addressed. The addressed slave will clear its SM2 bit and prepare to receive the data bytes that will be coming. The slaves that were not being addressed retain their SM2 bits as set and ignore the incoming data bytes.

Note: Bit SM2 has no effect in mode 0. SM2 can be used in mode 1 to check the validity of the stop bit. In a mode 1 reception, if SM2 = 1, the receive interrupt will not be activated unless a valid stop bit is received.

19.5 Interrupts

The two UART interrupts can be separately enabled or disabled by setting or clearing their corresponding enable bits in SCU SFR MODIEN2. An overview of the UART interrupt sources is shown in **Table 336**.

Table 336 UART Interrupt Sources

Interrupt	Flag	Interrupt Enable Bit
Reception completed	SCON.RI	SCU_MODIEN2.RIEN1/2
Transmission completed	SCON.TI	SCU_MODIEN2.TIEN1/2

19.6 Baud Rate Generation

There are several ways to generate the baud rate clock for the serial port, depending on the mode in which they are operating.

The baud rates in modes 0 and 2 are fixed to f_{sys}/2 and f_{sys}/64 respectively, while the variable baud rate in modes 1 and 3 is generated based on the setting of the Baud-rate generator in SCU (see **Section 19.6.1**).

“Baud rate clock” and “baud rate” must be distinguished from each other. The serial interface requires a clock rate that is 16 times the baud rate for internal synchronization. Therefore, the UART baud-rate generator must provide a “baud rate clock” to the serial interface where it is divided by 16 to obtain the actual “baud rate”. The abbreviation f_{sys} refers to the input clock frequency.

19.6.1 Baud Rate Generator

Note: The register names used here refer to UART1. For UART2, the register names need to be adapted accordingly.

The baud-rate generator in SCU is used to generate the variable baud rate for the UART in modes 1 and 3. It has programmable 11-bit reload value, 3-bit prescaler and 5-bit fractional divider.

The baud-rate generator clock is derived via a prescaler (f_{DIV}) from the input clock f_{sys}. The baud rate timer counts downwards and can be started or stopped through the baud rate control run bit BCON1.BR1_R. Each underflow of the timer provides one clock pulse to the serial channel. The timer is reloaded with the 11-bit BG1.BG1_BR_VALUE stored in its reload register BG1 each time it underflows. The duration between underflows depends on the ‘n’ value in the fractional divider, which can be selected by the bits BGL1.BG1_FD_SEL. ‘n’ times out of 32, the timer counts one cycle more than specified by BG1.BG1_BR_VALUE. The prescaler is selected by the bits BCON1.BR1_PRE.

Register BG1 is the dual-function Baud-rate Generator/Reload register. Reading BG1 returns the contents of the timer (not the configured reload value!), while writing to BG1 updates the reload register.

The register BG1 should be written only when BCON1.BR1_R is 0. An auto-reload of the timer with the contents of the reload register is performed one instruction cycle after the next time BCON1.BR1_R is set. Any write to BG1, while BCON1.BR1_R is set, will be ignored.

The baud rate of the baud-rate generator depends on the following bits and register values:

- Input clock f_{sys}
- Value of bit field BCON1.BR1_PRE.
- Value of bit field BGL1.BG1_FD_SEL
- Value of the 11-bit reload value BG1.BG1_BR_VALUE

Figure 167 shows a simplified block diagram of the baud rate generator.

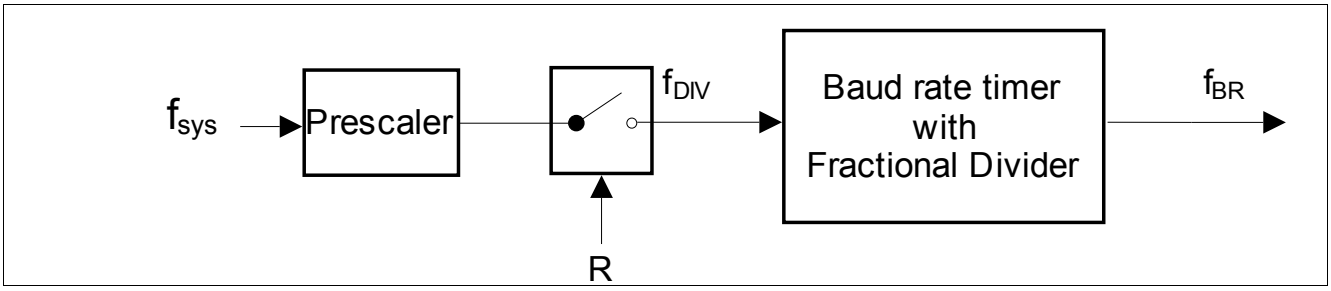

Figure 167 Simplified Baud Rate Generator Block Diagram

The following formula calculate the final baud rate.

$$\text{Baud rate} = \frac{f_{sys}}{16 \bullet \text{PRE} \bullet (\text{BR_VALUE} + \frac{n}{32})} \quad (10)$$

The value of PRE (prescaler) is chosen by the bit field BCON1.BR1_PRE. BR_VALUE represents the contents of the reload value, taken as unsigned 11-bit integer from the bit field BG1.BG1_BR_VALUE. n/32 is defined by the fractional divider selection in bit field BGL1.BG1_FD_SEL.

The maximum baud rate that can be generated is limited to $f_{sys}/32$. Hence, for module clocks of 40 MHz and 25 MHz, the maximum achievable baud rate is 1.25 MBaud and 0.78 MBaud respectively.

Table 337 and **Table 338** list various commonly used baud rates together with their corresponding parameter settings and the deviation errors compared to the intended baud rate.

Table 337 Typical Baud Rates of UART (f_{sys} = 40 MHz)

Baud rate (f_{sys} = 40 MHz)	PRE	Reload Value (BR_VALUE)	Numerator of Fractional Value (FD_SEL)	Deviation Error
250.4 kBaud	1 (BR1_PRE = 000)	9(9_H)	31 ($1F_H$)	+0.15%
115.2 kBaud	1 (BR1_PRE = 000)	21 (15_H)	22 (16_H)	+0.06%
20 kBaud	1 (BR1_PRE = 000)	125 ($7D_H$)	0 (0_H)	0.00%
19.2 kBaud	1 (BR1_PRE = 000)	130 (82_H)	7 (7_H)	-0.01%
9600 Baud	2 (BR1_PRE = 001)	130 (82_H)	7 (7_H)	-0.01%
4800 Baud	4 (BR1_PRE = 010)	130 (82_H)	7 (7_H)	-0.01%
2400 Baud	8 (BR1_PRE = 011)	130 (82_H)	7 (7_H)	-0.01%

Table 338 Typical Baud Rates of UART (f_{sys} = 25 MHz)

Baud rate (f_{sys} = 25 MHz)	PRE	Reload Value (BR_VALUE)	Numerator of Fractional Value (FD_SEL)	Deviation Error
115.2 kBaud	1 (BR1_PRE = 000)	13 (D_H)	18 (12_H)	+0.01%
20 kBaud	1 (BR1_PRE = 000)	78 ($4E_H$)	4 (4_H)	0.00%
19.2 kBaud	1 (BR1_PRE = 000)	81 (51_H)	12 (C_H)	+0.01%
9600 Baud	2 (BR1_PRE= 001)	81 (51_H)	12 (C_H)	+0.01%
4800 Baud	4 (BR1_PRE = 010)	81 (51_H)	12 (C_H)	+0.01%
2400 Baud	8 (BR1_PRE = 011)	81 (51_H)	12 (C_H)	+0.01%

19.7 LIN Support in UART

The UART module can be used to support the Local Interconnect Network (LIN) protocol for both master and slave operations. The LIN baud rate detection feature, which consists of the hardware logic for break and sync byte detection, provides the capability to detect the baud rate within LIN protocol using Timer 2 / Timer 21. This allows the UART module to be synchronized to the LIN baud rate for data transmission and reception.

19.7.1 LIN Protocol

LIN is a holistic communication concept for local interconnected networks in vehicles. The communication is based on the SCI (UART) data format, a single-master/multiple-slave concept, a clock synchronization for nodes without stabilized time base. An attractive feature of LIN is the self-synchronization of the slave nodes without a crystal or ceramic resonator, which significantly reduces the cost of hardware platform. Hence, the baud rate must be calculated and returned with every message frame.

The structure of a LIN frame is shown in **Figure 168**. The frame consists of the:

- header, which comprises a sync break (13-bit time low), sync byte (55_H), and ID field
- response time
- data bytes (according to UART protocol)
- checksum

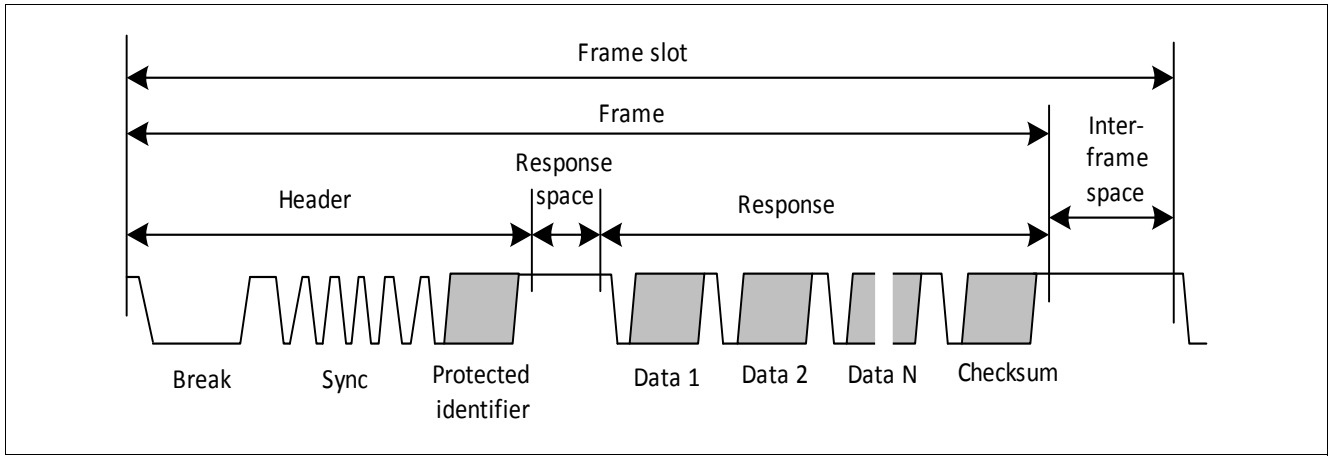

Figure 168 The Structure of LIN Frame

Each byte field is transmitted as a serial byte, as shown in **Figure 169**. The LSB of the data is sent first and the MSB is sent last. The start bit is encoded as a bit with value zero (dominant) and the stop bit is encoded as a bit with value one (recessive).

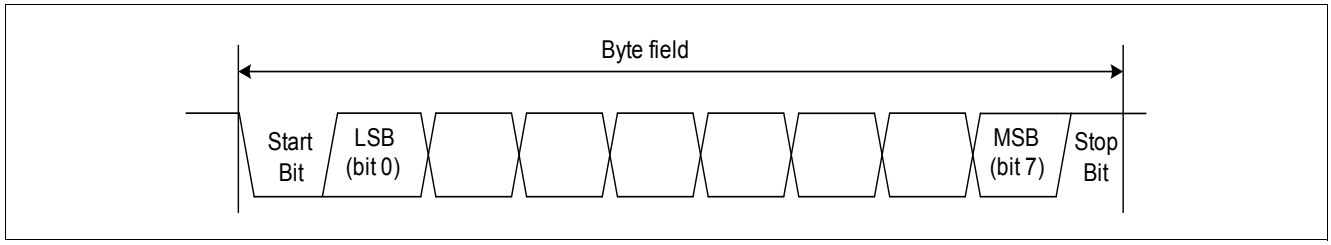

Figure 169 The Structure of Byte Field

The sync break is used to signal the beginning of a new frame. It is the only field that does not comply with **Figure 169**. A sync break is always generated by the master task (in the Master Mode) and it must be at least 13 bits of dominant value, including the start bit, followed by a sync break delimiter, as shown in **Figure 170**. The sync break delimiter will be at least one nominal bit time long.

A slave node will use a sync break detection threshold of 11 nominal bit times.

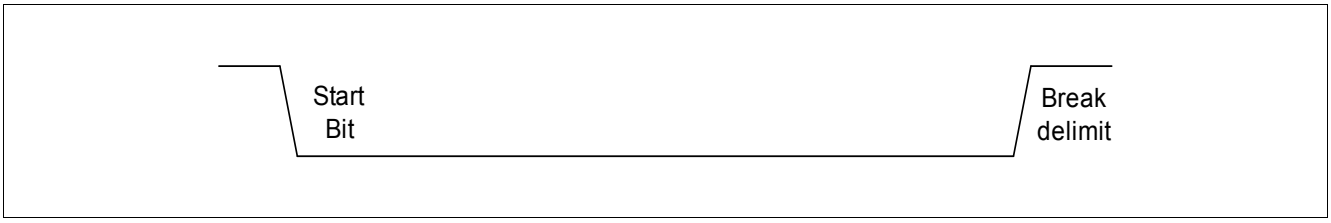

Figure 170 The Sync Break Field

The sync byte is a specific pattern for the determination of the time base. The sync byte field consists of the data value 55_H, as shown in **Figure 171**.

A slave task is always able to detect the sync break/sync sequence, even if it expects a byte field (assuming the byte fields are separated from each other). If this happens, detection of the sync break/sync sequence will abort the transfer in progress and processing of the new frame will commence.

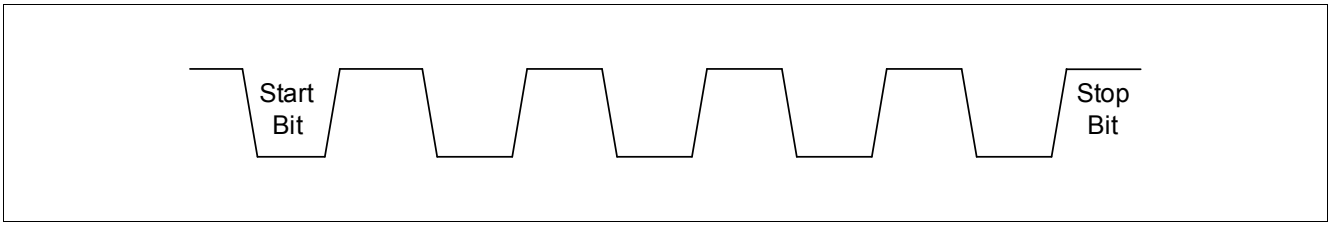

Figure 171 The Sync Byte Field

The slave task will receive and transmit data when an appropriate ID is sent by the master:

1. The slave waits for the sync break
2. The slave synchronizes on the sync byte
3. The slave snoops for the ID
4. According to the ID, the slave determines whether to receive or transmit data, or do nothing
5. When transmitting, the slave sends 2, 4 or 8 data bytes, followed by a Check Byte

19.7.2 LIN Header Transmission

LIN header transmission is only applicable in Master Mode. In the LIN communication, a master task decides when and which frame is to be transferred on the bus. It also identifies a slave task to provide the data transported by each frame. The information needed for the handshaking between the master and slave, tasks is provided by the master task through the header part of the frame.

The header consists of a sync break and sync byte pattern followed by an identifier. Among these three fields, only the sync break pattern cannot be transmitted as a normal 8-bit UART data. The sync break must contain a dominant value of 13 bits or more to ensure proper synchronization of slave nodes.

In the LIN communication, a slave task is required to be synchronized at the beginning of the protected identifier field of the frame. For this purpose, every frame starts with a sequence consisting of a sync break followed by a sync byte field. This sequence is unique and provides enough information for any slave task to detect the beginning of a new frame and to be synchronized at the start of the identifier field.

19.7.3 Automatic Synchronization to the Host

Upon entering LIN communication, a connection is established and the transfer speed (baud rate) of the serial communication partner (host) is automatically synchronized in the following steps that are to be included in the user software:

STEP 1: Initialize interface for reception and timer for baud rate measurement

STEP 2: Wait for an incoming LIN frame from host

STEP 3: Synchronize the baud rate to the host

STEP 4: Enter for Master Request Frame or for Slave Response Frame

The next sections, **Section 19.7.4**, **Section 19.7.5** and **Section 19.7.6** provide some hints on setting up the microcontroller for baud rate detection of LIN.

*Note: Re-synchronization and setup of the baud rate has always to be done for **every** Master Request Header or Slave Response Header LIN frame by user software.*

19.7.4 Initialization of Break/Sync Field Detection Logic

The LIN baud rate detection feature provides the capability to detect the baud rate within the LIN protocol using Timer 2 / Timer 21. Initialization consists of:

- Setting of the serial port of the microcontroller to Mode 1 (8-bit UART, variable baud rate) for communication.
- Providing the baud rate range via bit field LINST.BGSEL.
- Toggling of the LINST.BRDIS bit (set the bit to 1 before clearing it back to 0) to initialize the sync break/sync detection logic.
- Clearing all status flags LINST.BRK, LINST.EOFSYN and LINST.ERRSYN to 0.
- Setting of Timer 2 / Timer 21 to capture mode with falling edge trigger at pin T2EX. Setting of the bits T2MOD.EDGESEL to 0 by default and T2CON.CP/$\overline{RL2}$ to 1.
- Enabling Timer 2 external events. T2CON. EXEN2 is set to 1. (EXF2 flag is set when a negative transition occurs at pin T2EX)
- *Configuring of* f_{T2} by bit field T2MOD.T2PRE.

19.7.5 Baud Rate Range Selection

The sync break/sync field detection logic supports a maximum number of bits in the sync break field as defined by **Equation (11)**.

$$\text{Maximum number of bits} = \text{Baud rate} \bullet \frac{4095}{\text{Sample Frequency}} \tag{11}$$

The sample frequency is given by **Equation (12)**.

$$\text{Sample Frequency} = \frac{fsys}{8 \bullet 2^{BGSEL}} \tag{12}$$

If the maximum number of bits in the Break field is exceeded, the internal counter will overflow, which results in a baud rate detection error. Therefore, an appropriate BGSEL value has to be selected for the required baud rate detection range.

The baud rate range defined by different BGSEL settings is shown in **Table 339**.

Table 339 BGSEL Bit Field Definition for Different Input Frequencies

f_{sys}	BGSEL	Baud Rate Select for Detection $f_{sys}/(2184*2^{BGSEL})$ to $f_{sys}/(72*2^{BGSEL})$
40 MHz	00_B	18.3 kHz to 555.6 kHz
	01_B	9.2 kHz to 277.8 kHz
	10_B	4.6 kHz to 138.9 kHz
	11_B	2.3 kHz to 69.4 kHz
25 MHz	00_B	11.2 kHz to 347.2 kHz
	01_B	5.7 kHz to 173.6 kHz
	10_B	2.9 kHz to 86.8 kHz
	11_B	1.4 kHz to 43.4 kHz

Each BGSEL setting supports a range of baud rate for detection. If the baud rate used is outside the defined range, the baud rate may not be detected correctly.

When f_{sys} = 40 MHz, the baud rate range between 18.3 kHz to 555.6 kHz can be detected. The following examples serve as a guide to select the BGSEL value:

- If the baud rate falls in the range of 2.3 kHz to 4.6 kHz, selected BGSEL value is "11_B".
- If the baud rate falls in the range of 4.6 kHz to 9.2 kHz, selected BGSEL value is "10_B".
- If the baud rate falls in the range of 9.2 kHz to 18.3 kHz, selected BGSEL value is "01_B".
- If the baud rate falls in the range of 18.3 kHz to 555.6 kHz, selected BGSEL value is "00_B".
- If the baud rate is 20 kHz, the possible values of BGSEL that can be selected are "00_B", "01_B", "10_B", and "11_B". However, it is advisable to select "00_B" for better detection accuracy.

The baud rate can also be detected when f_{sys} = 25 MHz, for which the baud rate range that can be detected is between 1.4 kHz to 347.2 kHz.

In general, BGSEL should be selected as small as possible, to achieve the best possible accuracy.

19.7.6 LIN Baud Rate Detection

The baud rate detection for LIN is shown in **Figure 172**, the Header LIN frame consists of the:

- Sync Break (13 bit times low)
- Sync Byte (55_H)
- Protected ID field

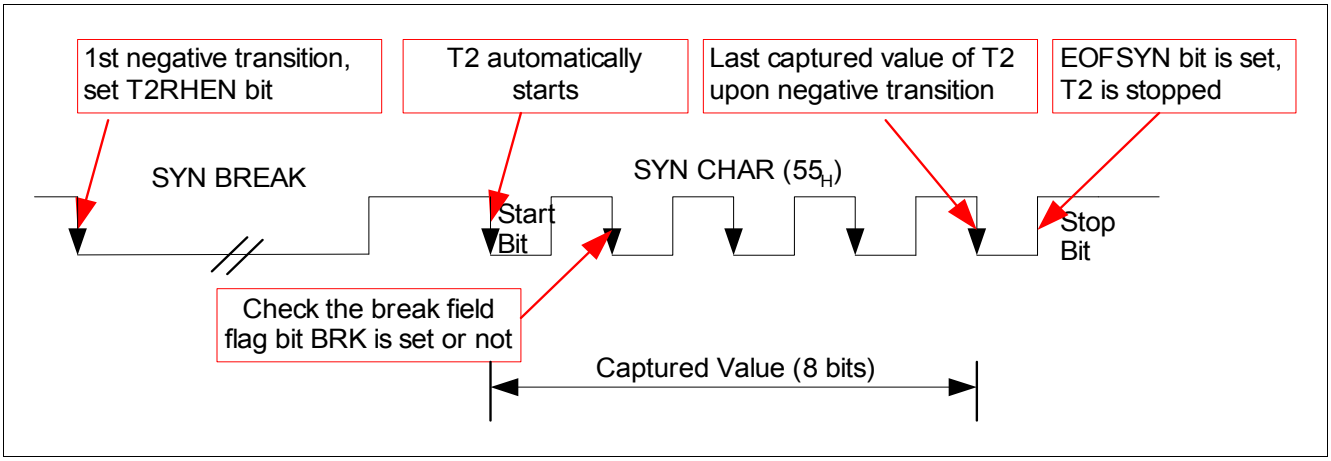

Figure 172 LIN Auto Baud Rate Detection

With the first falling edge:

- The Timer 2 External Start Enable bit (T2MOD.T2RHEN) is set. The falling edge at pin T2EX is selected by default for Timer 2 External Start (bit T2MOD.T2REGS is 0).

With the second falling edge:

- Start Timer 2 by the hardware.

With the third falling edge:

- Timer 2 captures the timing of 2 bits of SYN byte.
- Check the Break Field Flag bit LINST.BRK.

If the sync break field flag LINST.BRK is set, software may continue to capture 4/6/8 bits of sync byte. Finally, the end of sync byte flag (LINST.EOFSYN) is set, Timer 2 is stopped. T2 Reload/Capture register (RC) is the time taken for 2/4/6/8 bits according to the implementation. Then the LIN routine calculates the actual baud rate, sets the BCON1.BR1_PRE and BG1 values if the UART module uses the baud-rate generator for baud rate generation.

After the third falling edge, the software may discard the current operation and continue to detect the next header LIN frame if the following conditions were detected:

- The Sync Break Field Flag LINST.BRK is not set, or
- The Sync Byte Error Flag LINST.ERRSYN is set

19.8 Register Description

Table 340 Register Address Space

Module	Base Address	End Address	Note
UART1	4802 0000$_H$	4802 1FFF$_H$	UART1
UART2	4802 2000$_H$	4802 3FFF$_H$	UART2
SCU	5000 5000$_H$	5000 5FFF$_H$	SCU_DM

Table 341 Register Overview

Register Short Name	Register Long Name	Offset Address	Reset Value
UART Registers,			
UART_SBUF	Serial Data Buffer	04$_H$	0000 0000$_H$
UART_SCON	Serial Channel Control Register	00$_H$	0000 0000$_H$
UART_SCONCLR	Serial Channel Control Clear Register	08$_H$	0000 0000$_H$

The registers are addressed wordwise.

19.8.1 UART Registers

Note: The register names used here refer to UART1. For UART2, the register names need to be adapted accordingly.

UART uses the Special Function Registers (SFRs) UART1->SCON, UART1->SBUF, SCU->BCON1, SCU->LINST and SCU->BG1. SCON is the control register and SBUF is the data register. The serial port control and status register is the SFR SCON. This register contains not only the mode selection bits, but also the 9th data bit for transmit and receive (TB8 and RB8) and the serial port interrupt bits (TI and RI).

SBUF is the receive and transmit buffer of the serial interface. Writing to SBUF loads the transmit register and initiates transmission. This register is used for both transmit and receive data. Transmit data is written to this location and receive data is read from this location, but the two paths are independent. Reading out SBUF accesses a physically separate receive register.

Serial Data Buffer

UART_SBUF	Offset	Reset Value
Serial Data Buffer	04_H	see Table 342

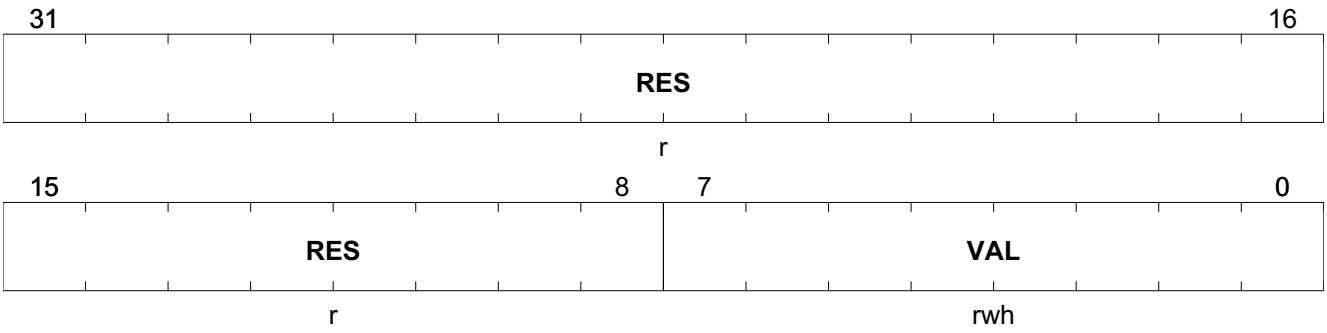

Field	Bits	Type	Description
RES	31:8	r	**Reserved** Returns 0 if read; should be written with 0.
VAL	7:0	rwh	**Serial Interface Buffer Register**

Table 342 Reset of UART_SBUF

Register Reset Type	Reset Values	Reset Short Name	Reset Mode	Note
RESET_TYPE_3	00000000_H	RESET_TYPE_3		

Serial Channel Control Register

UART_SCON	Offset	Reset Value
Serial Channel Control Register	00_H	see Table 343

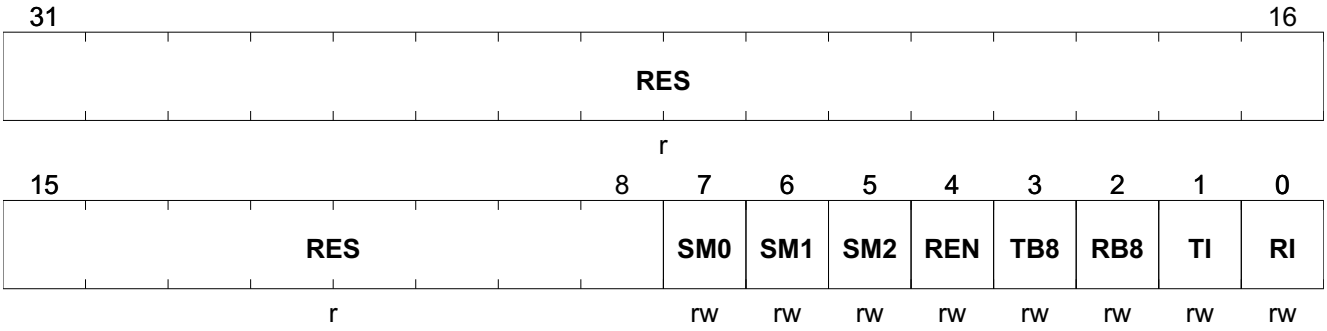

Field	Bits	Type	Description
RES	31:8	r	**Reserved** Returns 0 if read; should be written with 0.
SM0	7	rw	**Serial Port Operating Mode Selection** see Table 335
SM1	6	rw	**Serial Port Operating Mode Selection** see Table 335
SM2	5	rw	**Enable Serial Port Multiprocessor Communication in Modes 2 and 3** Mode 2 or 3: - if SM2 = 1: RI will not be activated if the received 9th data bit (RB8) is 0. Mode 1: - if SM2 = 1: RI will not be activated if no valid stop bit (RB8) was received. Mode 0: - SM2 should be 0.
REN	4	rw	**Enable Receiver of Serial Port** 0_B Serial reception is disabled. 1_B Serial reception is enabled.
TB8	3	rw	**Serial Port Transmitter Bit 9** In modes 2 and 3, this is the 9th data bit sent. In mode 1, this bit is set to 1 In mode 0, this bit is set to 1
RB8	2	rw	**Serial Port Receiver Bit 9** In modes 2 and 3, this is the 9th data bit received. In mode 1, this is the stop bit received. In mode 0, this bit is not used. Must be cleared by flag SCONCLR.RB8CLR. This flag can also be set by software.

Field	Bits	Type	Description
TI	1	rw	**Transmit Interrupt Flag** This is set by hardware at the end of the 8th bit in mode 0, or at the beginning of the stop bit in modes 1, 2, and 3. Must be cleared by flag SCONCLR.TICLR. This flag can also be set by software.
RI	0	rw	**Receive Interrupt Flag** This is set by hardware at the end of the 8th bit on mode 0, or at the half point of the stop bit in modes 1, 2, and 3. Must be cleared by flag SCONCLR.RICLR. This flag can also be set by software.

Table 343 Reset of UART_SCON

Register Reset Type	Reset Values	Reset Short Name	Reset Mode	Note
RESET_TYPE_3	00000000_H	RESET_TYPE_3		

Serial Channel Control Clear Register

UART_SCONCLR	Offset	Reset Value
Serial Channel Control Clear Register	08_H	see Table 344

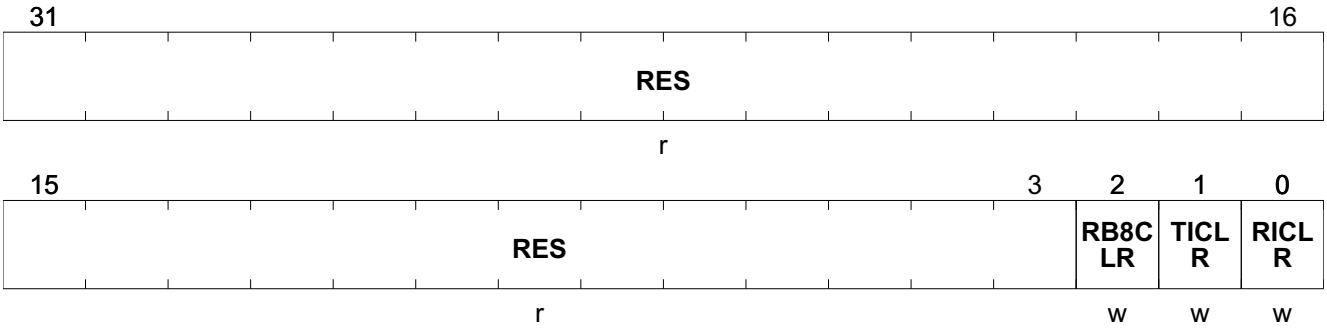

Field	Bits	Type	Description
RES	31:3	r	**Reserved** Returns 0 if read; should be written with 0.
RB8CLR	2	w	**SCON.RB8 Clear Flag**[1)] 0_B RB8 Flag is not cleared. 1_B RB8 Flag is cleared.
TICLR	1	w	**SCON.TI Clear Flag**[1)] 0_B TI Flag is not cleared. 1_B TI Flag is cleared.
RICLR	0	w	**SCON.RI Clear Flag**[1)] 0_B RI Flag is not cleared. 1_B RI Flag is cleared.

1) Flag is always read as 0

Table 344 Reset of UART_SCONCLR

Register Reset Type	Reset Values	Reset Short Name	Reset Mode	Note
RESET_TYPE_3	00000000_H	RESET_TYPE_3		

19.8.2 Baud-rate Generator Control and Status Registers

The UART module is also used to support LIN communication. For this purpose the UART is equipped with a LIN Break recognition, sync byte detector and special baudrate generator including a fractional divider. The control registers for this support hardware are located in the SCU_DM module. The figure below sketches the structure of the complete UART - LIN support hardware.

19.9 Interfaces of the UART Module

An overview of the I/O interface is shown in **Figure 174**.

In mode 0 (the serial port behaves as a shift register) data is shifted in through RXD_1 and out through RXDO, while the TXD_1 line is used to provide a shift clock which can be used by external devices to clock data in and out. In modes 1, 2 and 3, the port behaves as a UART. Data is transmitted on TXD and received on RXD.

Data that is shifted into and out of the UART through RXD and TXD respectively, can be selected from different sources. This selection is performed by the SCU via SFR-bit MODPISEL.URIOS1.

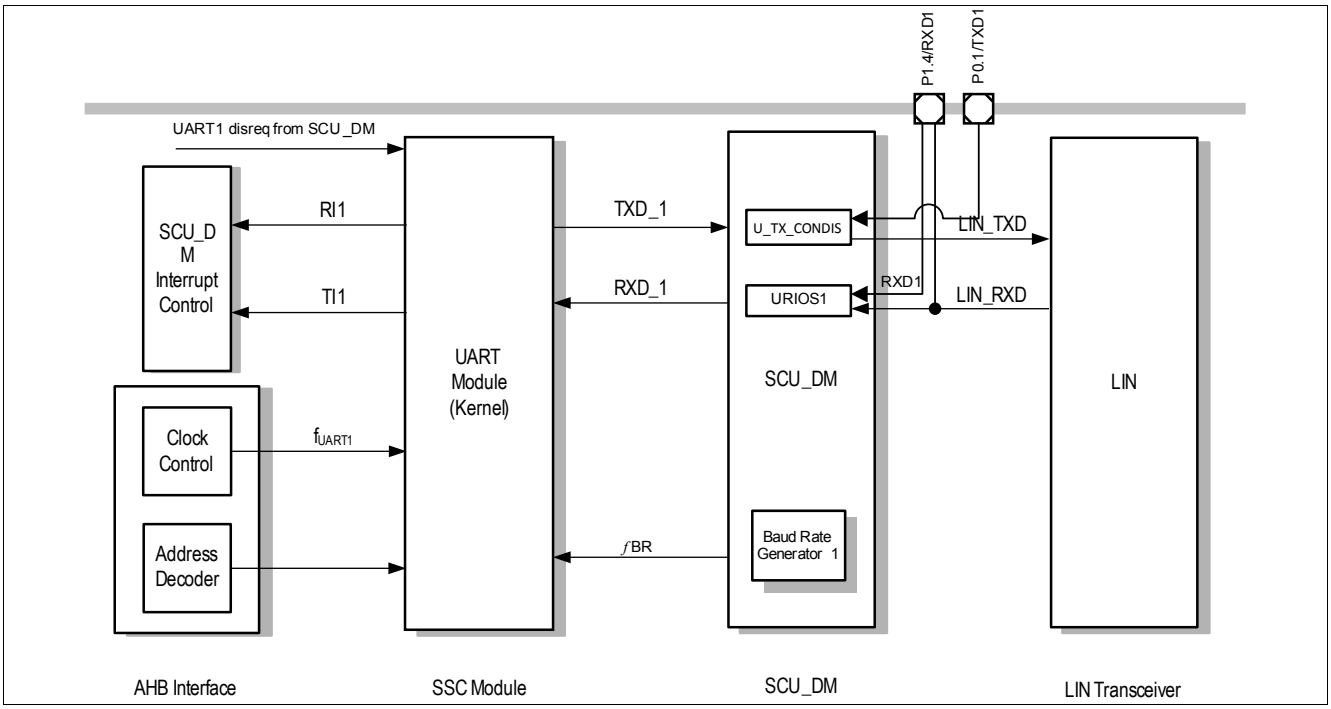

Figure 173 UART1 Module I/O Interface

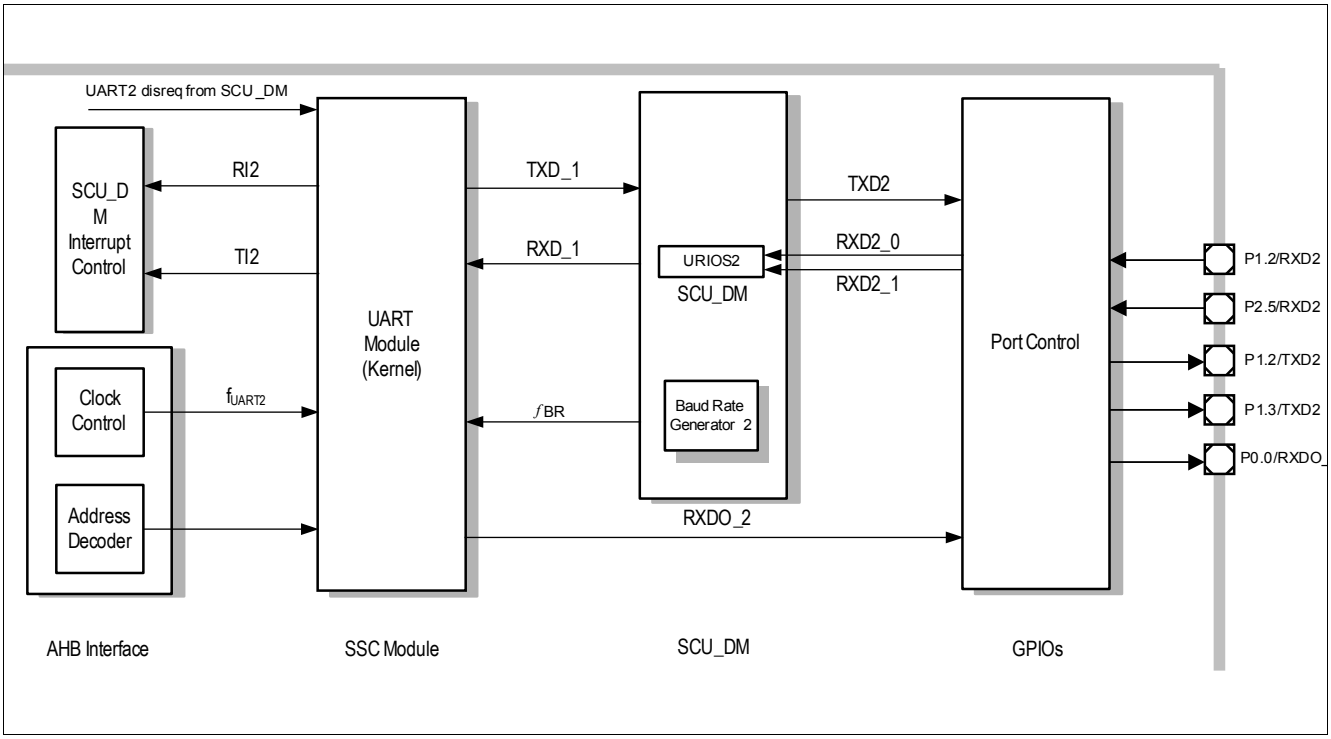

Figure 174 UART2 Module I/O Interface

20 LIN Transceiver

20.1 Features

General Functional Features

- Compliant to LIN2.2 Standard, backward compatible to LIN1.3, LIN2.0 and LIN 2.1
- Compliant to SAE J2602 (Slew Rate, Receiver hysteresis)

Special Features

- Measurement of LIN Master baudrate via Timer 2
- LIN can be used as Input/Output with SFR bits.
- TxD Timeout Feature (optional, on by default)
- Overcurrent limitation and overtemperature protection
- LIN module fully resettable via global enable bit

Operation Modes Features

- LIN Sleep Mode (LSLM)
- LIN Receive-Only Mode (LROM)
- LIN Normal Mode (LNM)
- High Voltage Input / Output Mode (LHVIO)

Slope Modes Features

- Normal Slope Mode (20 kbit/s)
- Low Slope Mode (10.4 kbit/s)
- Fast Slope Mode (62.5 kbit/s)
- Flash Mode (115 kbit/s, 250 kbit/s)

Wake-Up Features

- LIN Bus wake-up. The wake-up happens on the falling edge of the LIN signal, to allow wake-up and decoding of the same frame. It is possible to enter the sleep mode also with LIN dominant (e.g. caused by LIN shorted to GND).

20.2 Introduction

The LIN Module is a transceiver for the Local Interconnect Network (LIN) compliant to the LIN2.2 Standard, backward compatible to LIN1.3, LIN2.0 and LIN2.1. It operates as a bus driver between the protocol controller and the physical network. The LIN bus is a single wire, bi-directional bus typically used for in-vehicle networks, using baud rates between 2.4 kBaud and 20 kBaud. Additionally baud rates up to 62.5 kBaud are implemented.

The LIN Module offers several different operation modes, including a LIN Sleep Mode and the LIN Normal Mode. The integrated slope control allows to use several data transmission rates with optimized EMC performance. For data transfer at the end of line, a Flash Mode up to 115 kBaud is implemented. This Flash Mode can be used for data transfer under special conditions for up to 250 kbit/s (in production environment, point-to-point communication with reduced wire length and limited supply voltage).

20.2.1 Block Diagram

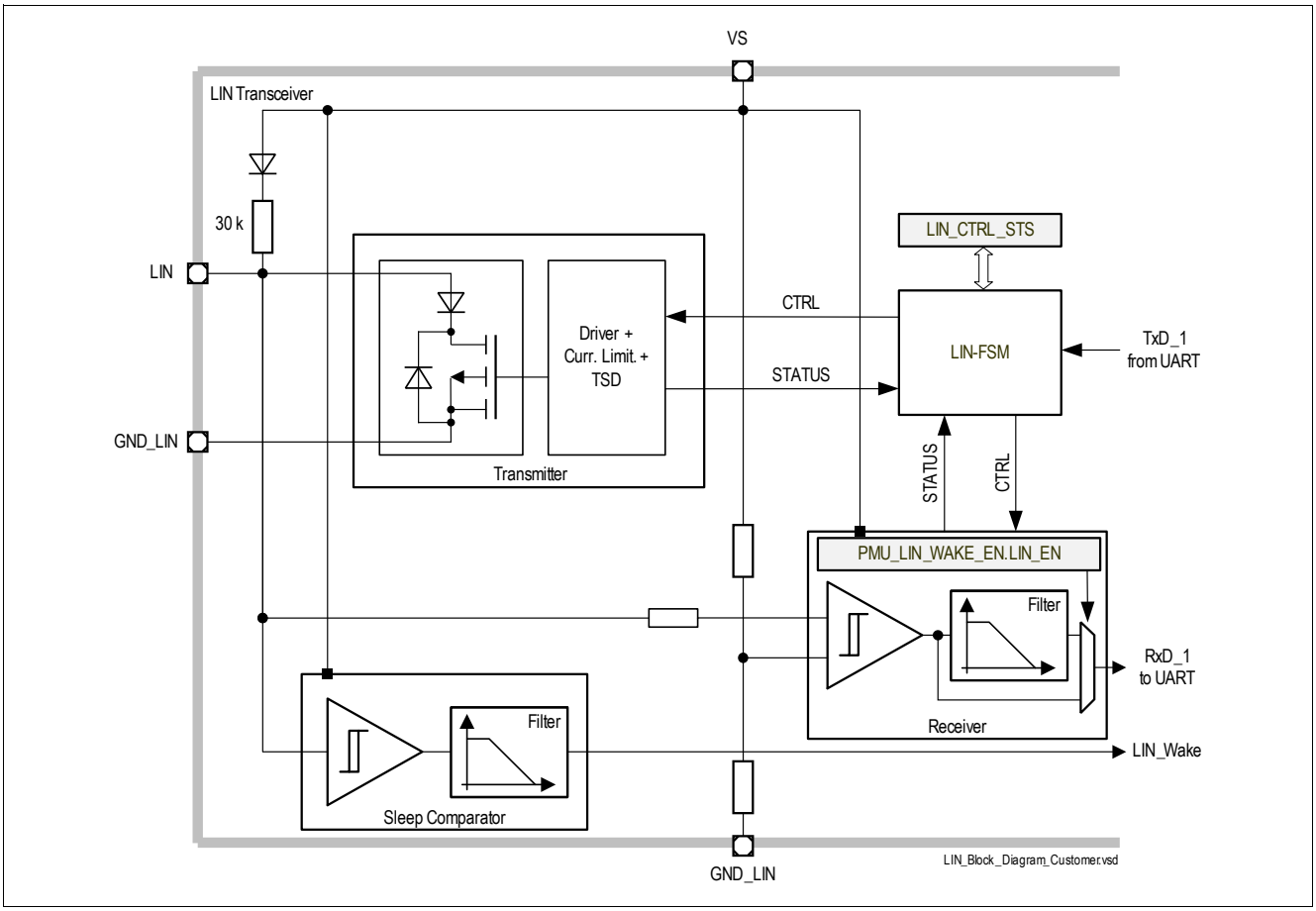

Figure 175 LIN Transceiver Block Diagram

20.3 Functional Description

The supported baudrates are:

- Low Slope Mode for a transmission up to 10.4 kBaud
- Normal Slope Mode for a transmission up to 20 kBaud
- Fast Slope Mode for a transmission up to 40 kBaud
- Flash Mode for a transmission up to 115 kBaud

20.3.1 LIN Normal Mode

The LIN Module is controlled by an internal state machine which determines the actual state of the transceiver. This state machine is controllable by the SFR interface.

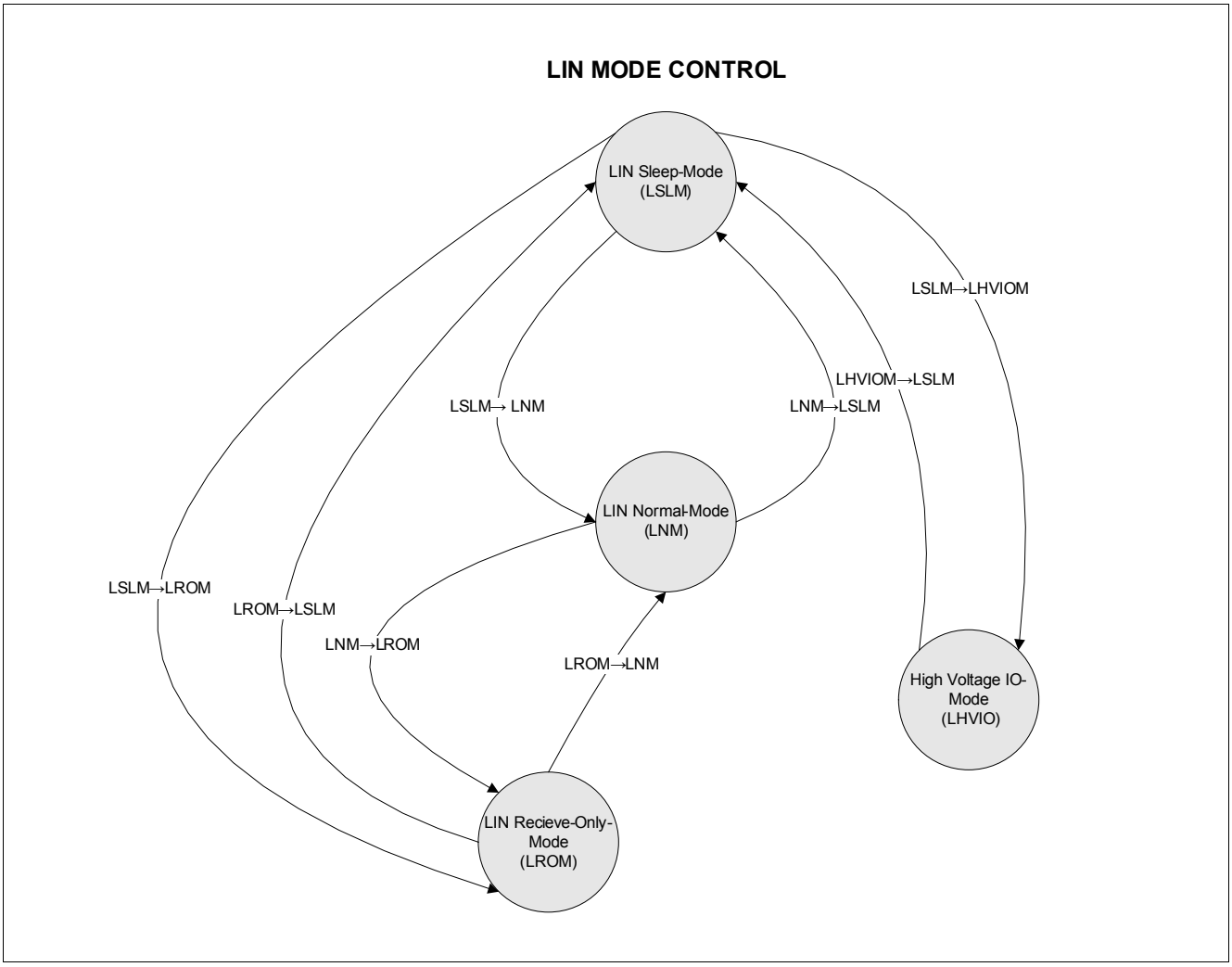

Figure 176 SFR controlled LIN Transceiver State machine

LIN Normal Mode (LNM)

In this mode it is possible to receive and transmit data with low slope, normal slope, fast slope or flash mode. Slope Setting is locked during LIN Normal Mode to avoid destruction of Communication Process. This is blocked by hardware.

LIN Receive-Only Mode (LROM)

In LIN Receive-Only Mode the transmitter is disabled. The receiver is active. This mode can be directly selected by application software or is automatically set upon error detection.

LIN Sleep Mode (LSLM)

In this mode, the transmit and receive functions are disabled, the wake receiver is active. Minimum current consumption is achieved. Wake up via LIN is possible. To disable the wake capability via LIN, within the PMU the LIN wake can be disabled.

LIN High Voltage Input / Output (LHVIO)

This mode is dedicated for using the LIN Transceiver as high voltage input/output. In LHVIO Mode the transceiver can be controlled by 2 SFR bits, **LIN_CTRL**.TXD and **LIN_CTRL**.RXD.

The transitions between the described states can only be executed when corresponding conditions are fulfilled. The detailed description of the transitions can be found below.

LIN Sleep Mode (LSLM) - LIN Receive-Only Mode (LROM) Transition Description

- LSLM - LROM transition is executed when:
  - LIN_CTRL.MODE is configured to LIN Receive-Only Mode and
  - Feedback Signals of Mode and Slope Mode are ok and
  - HV-Mode bit is not set
- LROM - LSLM transition is executed when:
  - LIN_CTRL.MODE is configured to LIN Sleep Mode

LIN Sleep Mode (LSLM) - LIN Normal Mode (LNM) Transition Description

- LSLM - LNM transition is executed when:
  - LIN_CTRL.MODE is configured to LIN Normal Mode and
  - Feedback Signals of Mode and Slope Mode are ok and
  - HV-Mode bit is not set and
  - VS-Undervoltage Flag is not set
  - LIN Transceiver LIN_CTRL.OT_STS and LIN_CTRL.OC_IS are not set and
  - no LIN_CTRL.TXD_TMOUT is set and
- LNM - LSLM transition is executed when:
  - LIN_CTRL.MODE is configured LIN Sleep Mode

LIN Normal Mode (LNM) - LIN Receive-Only Mode (LROM) Transition Description

- LNM - LROM transition is executed when
  - LIN_CTRL.MODE is configured to LIN Receive-Only Mode or
  - Feedback Signals of Mode and Slope Mode are not ok or
  - LIN_CTRL.OC_IS Flag is set or
  - VS-Undervoltage Flag is set or
  - LIN Transceiver LIN_CTRL.OT_STS or LIN_CTRL.OC_IS are set or
  - LIN_CTRL.TXD_TMOUT is set
- LROM - LNM transition is executed when:
  - LIN_CTRL.MODE is configured to LIN Normal Mode and
  - Feedback Signals of Mode and Slope Mode are ok and
  - LIN_CTRL.OC_STS Flag is not set and
  - VS-Undervoltage Flag is not set and
  - LIN Transceiver LIN_CTRL.OT_STS and LIN_CTRL.OC_IS are not set and
  - no LIN_CTRL.TXD_TMOUT is set

LIN Sleep Mode (LSLM) - LIN High Voltage Input / Output Mode (LHVIO) Transition Description

- LSLM - LHVIO transition is executed when
  - LIN_CTRL.HV_MODE flag is set and
  - LIN_CTRL.MODE is configured to LIN Normal Mode after LIN_CTRL.HV_MODE flag was set and
  - Feedback Signals of Mode and Slope Mode are ok and
  - LIN Transceiver LIN_CTRL.OT_STS and LIN_CTRL.OC_STS are not set
- LHVIO - LSLM transition is executed when:
  - LIN_CTRL.MODE is configured to LIN Sleep Mode and
  - LIN_CTRL.HV_MODE flag is set or
  - Feedback Signals of Mode and Slope Mode are not ok or
  - LIN Transceiver LIN_CTRL.OT_STS or LIN_CTRL.OC_STS are set

LIN Specifications 1.3 and 2.0, 2.1

The LIN specification 2.0 is a superset of the 1.3 version offering some additional features. However, it is possible to use the LIN 1.3 slave node in a 2.0 node cluster, as long as the new features are not used. Vice versa it is possible to use a LIN 2.0 node in the 1.3 cluster without using the new features.

The latest version of the LIN specification 2.1 has no changes regarding the physical layer specification of LIN 2.0.

20.3.2 LIN Transceiver Error Handling

The LIN Module provides error handling for three different cases:

LIN Transceiver TxD Timeout

If the internal UART TxD signal is dominant for the time $t > t_{timeout}$, the TxD timeout function deactivates the LIN transmitter output stage temporarily, by entering the LIN Receive-Only Mode. The transceiver remains in recessive state. The TxD timeout function prevents the LIN bus from being blocked by a permanent low signal on the TxD pin, caused by a failure. The failure is stored in the TXD_TMOUT flag. The transmitter stage is activated again after the dominant timeout condition is removed and after the TXD_TMOUT flag is cleared by software.

LIN Receiver Overcurrent

If the LIN transmitter detects an overcurrent condition $I > I_{BUS,sc}$, the LIN transceiver enters LIN Receive Only Mode and the overcurrent status will be stored in the LIN_OC_STS flag. The short circuit current is limited to $I_{BUS,sc}$. The LIN_OC_IS flag can be cleared by software and will be set again as long as the above condition remains.

To generate an interrupt in case of LIN overcurrent detection, the corresponding interrupt can be enabled by setting the LIN_IRQEN.OT_IEN in the LIN_IRQEN register. This interrupt is routed to INTISR_10.

LIN Receiver Overtemperature

If the LIN transmitter detects an overtemperature condition the transmitter will be deactivated temporarily, by entering the LIN Receive-Only Mode. The transceiver remains in recessive state. The failure is stored in the LIN_OT_IS flag. The transmitter stage is activated again after the overtemperature condition is gone and after the LIN_OT_STS flag is cleared by software.

To generate an interrupt in case of LIN overtemperature detection, the corresponding interrupt can be enabled by setting the LIN_IRQEN.OT_IEN in the LIN_IRQEN register. This interrupt is routed to INTISR_10.

20.3.3 Slope Modes

The LIN Module provides some additional slope mode features which can be used for EoL (End of Line) programming or to reduce emission in case of usage of lower baudrates. The configurable slope modes are:

Normal Slope Mode

This mode is usually used to transmit and receive messages on the bus. The selected slew rate setting allows a transmission rate of up to 20 kBaud.

Low Slope Mode

The usage of this mode is linked to a communication with lower baudrate. With this setting the emission of the transmitter can be reduced. The selected slew rate setting allows a transmission rate of up to 10.4 kBaud.

Fast Slope Mode

In this mode it is also possible to transmit and receive messages on the bus. The selected slew rate setting allows a transmission rate of up to 40 kBaud.

Flash Mode

In this mode it is possible to transmit and receive messages on the bus. Transmission rates of up to 115 kBaud are allowed due the internal slew rate control. This mode can be used for EoL programming.

Change of Slope modes

It is not possible to change the slope modes if the module is operating in LIN Normal Mode to avoid transmission errors. To change the slope mode for example from Normal Slope Mode to Flash Mode, it is necessary to change to LIN Receive-Only Mode or LIN Sleep Mode, configure the desired slope mode and to go back to LIN Normal Mode.

20.3.4 LIN Transceiver Status for Mode Selection

The LIN transceiver provides the possibility to monitor the on chip status through internally generated feedback signals. This provides additional protection functionality for the application to avoid wrong configuration of the transceiver, which may lead to a blocking of communication on the LIN Bus. The table below shows the decoding of feedback signals to check the current status of the transceiver.

Table 345 Decoding of Feedback Signals for LIN Transmitter Mode Settings

LIN_MODE_FB_<2>	LIN_MODE_FB<1>	LIN_MODE_FB<0>	Remarks
0	0	0	Mode Error
0	0	1	LIN Sleep Mode
0	1	0	Mode Error
0	1	1	Mode Error
1	0	0	Mode Error
1	0	1	LIN Receive-Only Mode
1	1	0	Mode Error
1	1	1	LIN Normal Mode

A Mode Error indicates a problem in the LIN configuration. If that applies, check the LIN software configuration, and whenever this does not improve the feedback mode it is recommended to enter Sleep Mode.

20.3.5 LIN Transceiver Slope Mode Status

The LIN transceiver provides the possibility to monitor the on chip status of the slope control through internally generated feedback signals. The table shows the decoding of the feedback signals.

Table 346 Slope Mode Status

LIN_FB_SM3	LIN_FB_SM2	LIN_FB_SM1	Remarks
0	0	0	LIN module not enabled
0	0	1	Low Slope Mode
0	1	0	Normal Slope Mode
0	1	1	Fast Slope mode
1	0	0	Flash Mode
1	0	1	Slope Mode Error

Table 346 Slope Mode Status (cont'd)

LIN_FB_SM3	LIN_FB_SM2	LIN_FB_SM1	Remarks
1	1	0	Slope Mode Error
1	1	1	Slope Mode Error

20.4 Register Definition

Table 347 shows the module base addresses.

Table 347 Register Address Space

Module	Base Address	End Address	Note
LIN	$4801E000_H$	$4801FFFF_H$	

Table 348 Register Overview

Register Short Name	Register Long Name	Offset Address	Reset Value
Register Definition,			
LIN_CTRL	LIN Transceiver Control	00_H	0000 0000 0001 1000 xxx0 0x10 $0000\ 0111_B$
LIN_IRQS	LIN Transceiver Interrupt Status	04_H	$0000\ 0000_H$
LIN_IRQCLR	LIN Transceiver Interrupt Status Register Clear	08_H	$0000\ 0000_H$
LIN_IRQEN	LIN Transceiver Interrupt Enable Register	$0C_H$	$0000\ 0000_H$

The registers are addressed wordwise.

The LIN-Transceiver and the controlling finite state machine can be fully controlled by the following SFR Register.

LIN Transceiver Control

LIN_CTRL	Offset	Reset Value
LIN Transceiver Control	00_H	see Table 349

31	30	29	28	27	26	25	24	23	22	21	20	19	18	17	16
Res									Res	HV_MODE	Res		Res		
r									r	rw	r		r		

15	14	13	12	11	10	9	8	7	6	5	4	3	2	1	0
FB_SM3	FB_SM2	FB_SM1	SM		RXD	TXD	Res		MODE_FB			Res	MODE		Res
r	r	r	rw		r	rw	r		r			r	rw		r

Field	Bits	Type	Description
Res	31:23	r	**Reserved** Always read as 0

Field	Bits	Type	Description
Res	22	r	**Reserved** Always read as 1
HV_MODE	21	rw	**LIN Transceiver High Voltage Input - Output Mode** *Note: switching to HVIO-Mode (this configuration bit gets effective) is only possible when transceiver is in Sleep Mode.* 0_B **DISABLE** High Voltage Mode Entry is disabled 1_B **ENABLE** High Voltage Mode Entry is enabled
Res	20:19	r	**Reserved** Always read as “11”
Res	18:16	r	**Reserved** Always read as “00”
FB_SM3	15	r	**Feedback Signal 3 for Slope Mode Setting** Coding see **Table 346**
FB_SM2	14	r	**Feedback Signal 2 for Slope Mode Setting** Coding see **Table 346**
FB_SM1	13	r	**Feedback Signal 1 for Slope Mode Setting** Coding see **Table 346**
SM	12:11	rw	**LIN Transmitter Slope mode control** 00_B **Normal Slope Mode** for max. 20 kBaud 01_B **Fast Slope Mode** for max. 40 kBaud 10_B **Low Slope Mode** for max. 10.4 kBaud 11_B **Flash Mode** for max. 150 $kBaud_B$ *Note: Slope Mode can not be changed in Normal Mode*
RXD	10	r	**Output Signal of Receiver** Can be used to monitor the Receiver Output
TXD	9	rw	**LIN Transmitter switch on (only used when LIN_HV_MODE is set)** 0_B **Pull Down LIN Line** Transmitter is switched on 1_B **Pull Up Resistor is active** Transmitter is switched off
Res	8:7	r	**Reserved** Always read as 0
MODE_FB	6:4	r	**Feedback Signals for LIN Transmitter Mode Settings** Coding see **Table 345**
Res	3	r	**Reserved** Always read as 0
MODE	2:1	rw	**LIN transceiver power mode control** 00_B **LIN Sleep Mode** LIN module switched to LIN Sleep Mode 01_B **LIN Receive-Only Mode** LIN module switched to LIN Receive Only Mode 10_B **n.u.** not used 11_B **LIN Normal Mode** LIN module switched to LIN Normal Mode
Res	0	r	**Reserved** Always read as 1

Table 349 RESET of LIN_CTRL

Register Reset Type	Reset Values	Reset Short Name	Reset Mode	Note
RESET_TYPE_3	0018 XX07$_H$	RESET_TYPE_3		Exact Reset Value: 0000 0000 0001 1000 xxx0 0x10 0000 0111(binary)

LIN Transceiver Interrupt Status

LIN_IRQS	Offset	Reset Value
LIN Transceiver Interrupt Status	04$_H$	see Table 350

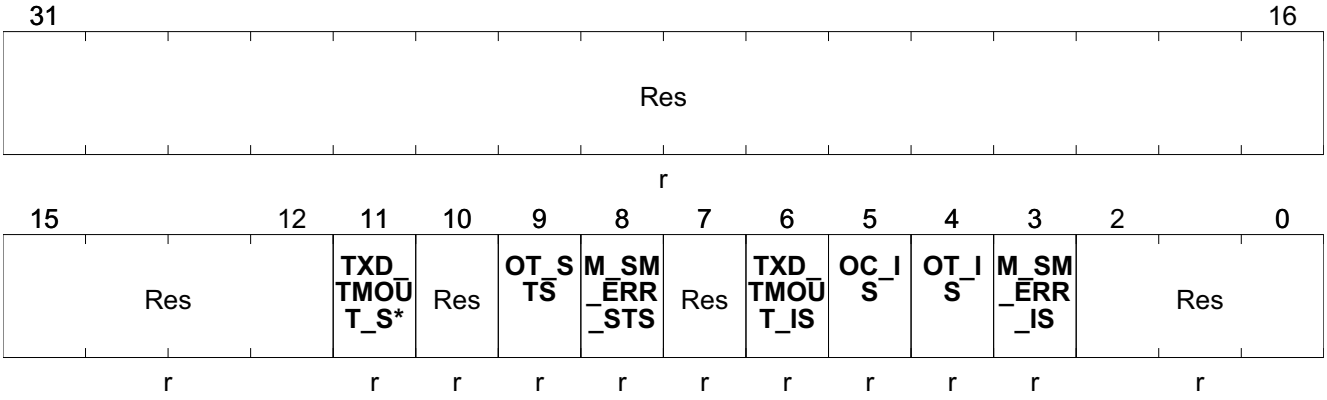

Field	Bits	Type	Description
Res	31:12	r	**Reserved** Always read as 0
TXD_TMOUT_STS	11	r	**LIN TXD time-out Status** 0_B **NO_TIMEOUT** no time-out occurred 1_B **TIMEOUT** time-out occurred
Res	10	r	**Reserved** Always read as 0
OT_STS	9	r	**LIN Receiver Overtemperature Status** 0_B **no Overtemperature** overtemperature occurred 1_B **Overtemperature** overtemperature occurred
M_SM_ERR_STS	8	r	**LIN Transceiver Mode Error - Slope Mode Error Status** 0_B **no Mode Error - Slope Mode** status occurred 1_B **Mode Error** status occurred
Res	7	r	**Reserved** Always read as 0
TXD_TMOUT_IS	6	r	**LIN TXD time-out Interrupt Status** 0_B **NO_TIMEOUT** no time-out occurred 1_B **TIMEOUT** time-out occurred

Field	Bits	Type	Description
OC_IS	5	r	**LIN Receiver Overcurrent Interrupt Status** 0_B **no Overcurrent** overcurrent status occurred 1_B **Overcurrent** overcurrent status occurred
OT_IS	4	r	**LIN Receiver Overtemperature Interrupt Status** 0_B **no Overtemperature** overtemperature occurred 1_B **Overtemperature** overtemperature occurred
M_SM_ERR_IS	3	r	**LIN Transceiver Mode Error - Slope Mode Error Interrupt Status** 0_B **no Mode Error - Slope Mode** status occurred 1_B **Mode Error** status occurred
Res	2:0	r	**Reserved** Always read as 1

Table 350 RESET of LIN_IRQS

Register Reset Type	Reset Values	Reset Short Name	Reset Mode	Note
RESET_TYPE_3	0000 0000_H	RESET_TYPE_3		

LIN Transceiver Interrupt Status Register Clear

LIN_IRQCLR	Offset	Reset Value
LIN Transceiver Interrupt Status Register Clear	08_H	see Table 351

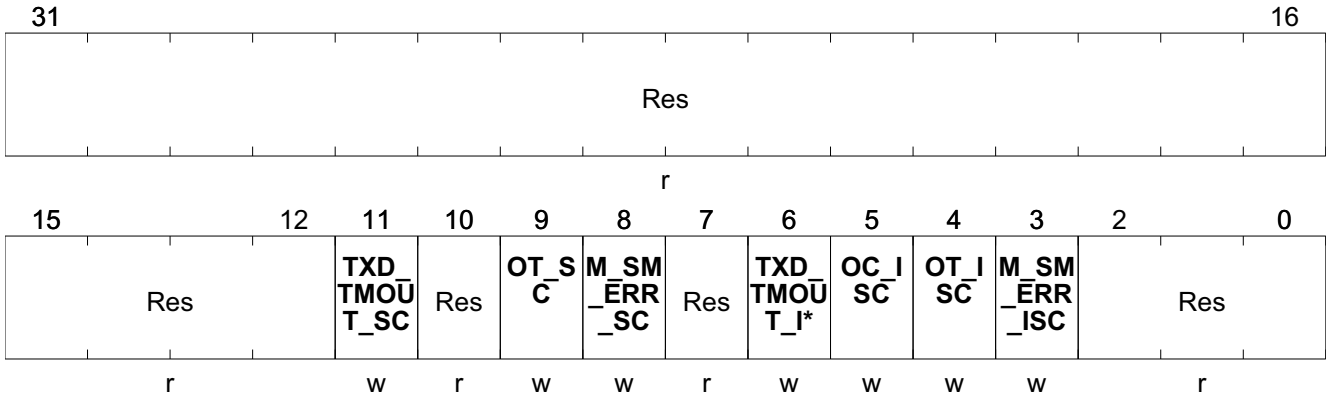

Field	Bits	Type	Description
Res	31:12	r	**Reserved** Always read as 0
TXD_TMOUT_SC	11	w	**LIN TXD time-out Status Clear** 0_B **NO_Clear** no time-out cleared 1_B **Clear** time-out cleared
Res	10	r	**Reserved** Always read as 0

Field	Bits	Type	Description
OT_SC	9	w	**LIN Receiver Overtemperature Status Clear** 0_B **NO_Clear** overtemperature not cleared 1_B **Clear** overtemperature cleared
M_SM_ERR_SC	8	w	**LIN Transceiver Mode Error - Slope Mode Error Status Clear** 0_B **NO_Clear** overtemperature not cleared 1_B **Clear** overtemperature cleared
Res	7	r	**Reserved** Always read as 0
TXD_TMOUT_ISC	6	w	**LIN TXD time-out Interrupt Status Clear** 0_B **NO_Clear** no time-out cleared 1_B **Clear** time-out cleared
OC_ISC	5	w	**LIN Receiver Overcurrent Interrupt Status Clear** 0_B **NO_Clear** overcurrent status not cleared 1_B **Clear** overcurrent status cleared
OT_ISC	4	w	**LIN Receiver Overtemperature Interrupt Status / Status Clear** 0_B **NO_Clear** overtemperature not cleared 1_B **Clear** overtemperature cleared
M_SM_ERR_ISC	3	w	**LIN Transceiver Mode Error - Slope Mode Error Interrupt Status Clear** 0_B **NO_Clear** overtemperature not cleared 1_B **Clear** overtemperature cleared
Res	2:0	r	**Reserved** Always read as 1

Table 351 RESET of LIN_IRQCLR

Register Reset Type	Reset Values	Reset Short Name	Reset Mode	Note
RESET_TYPE_3	0000 0000_H	RESET_TYPE_3		

LIN Transceiver Interrupt Enable Register

LIN_IRQEN	Offset	Reset Value
LIN Transceiver Interrupt Enable Register	$0C_H$	see Table 352

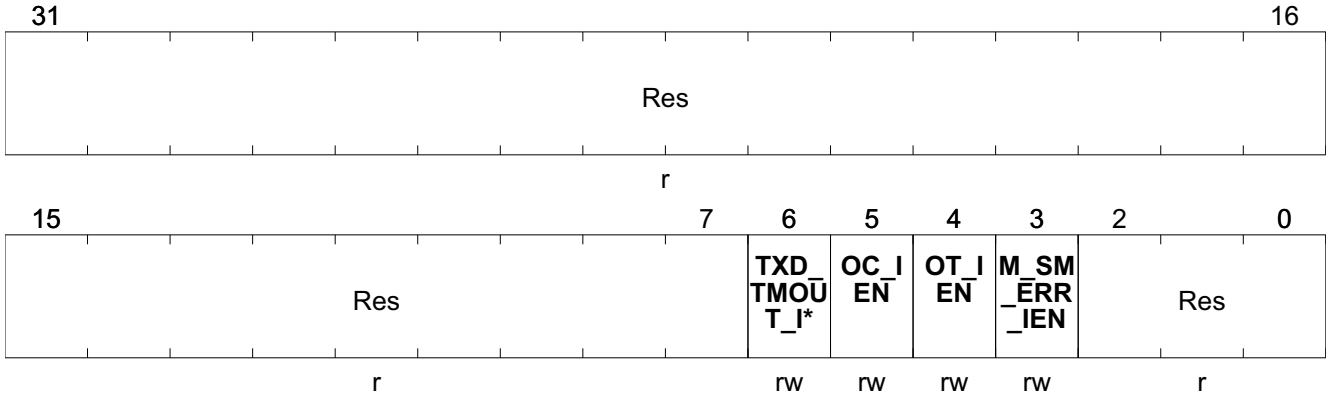

Field	Bits	Type	Description
Res	31:7	r	**Reserved** Always read as 0
TXD_TMOUT_IEN	6	rw	**LIN Transceiver TxD-Timeout interrupt enable** 0_B **disable** 1_B **enable**
OC_IEN	5	rw	**LIN Transceiver Overcurrent interrupt enable** 0_B **disable** 1_B **enable**
OT_IEN	4	rw	**LIN Transceiver Overtemperature interrupt enable** 0_B **disable** 1_B **enable**
M_SM_ERR_IEN	3	rw	**LIN Transceiver Mode - Slope Mode Error interrupt enable** 0_B **disable** 1_B **enable**
Res	2:0	r	**Reserved** Always read as 1

Table 352 RESET of LIN_IRQEN

Register Reset Type	Reset Values	Reset Short Name	Reset Mode	Note
RESET_TYPE_3	0000 0000_H	RESET_TYPE_3		

20.5 LIN Transceiver Interrupts

The LIN Transceiver has four different interrupt sources:

LIN-Interrupt Sources:

- overcurrent interrupt; will occur when current limitation is active
- overtemperature interrupt; will occur when thermal sensor detects overtemperature
- TxD-Timeout; will occur when LIN TxD internal signal is dominant for a defined period of time
- LIN Control Signal Feedback failure; will occur when the feedback control signals of LIN Transceiver are not correct

The output interrupt signal to Node 10 look like:

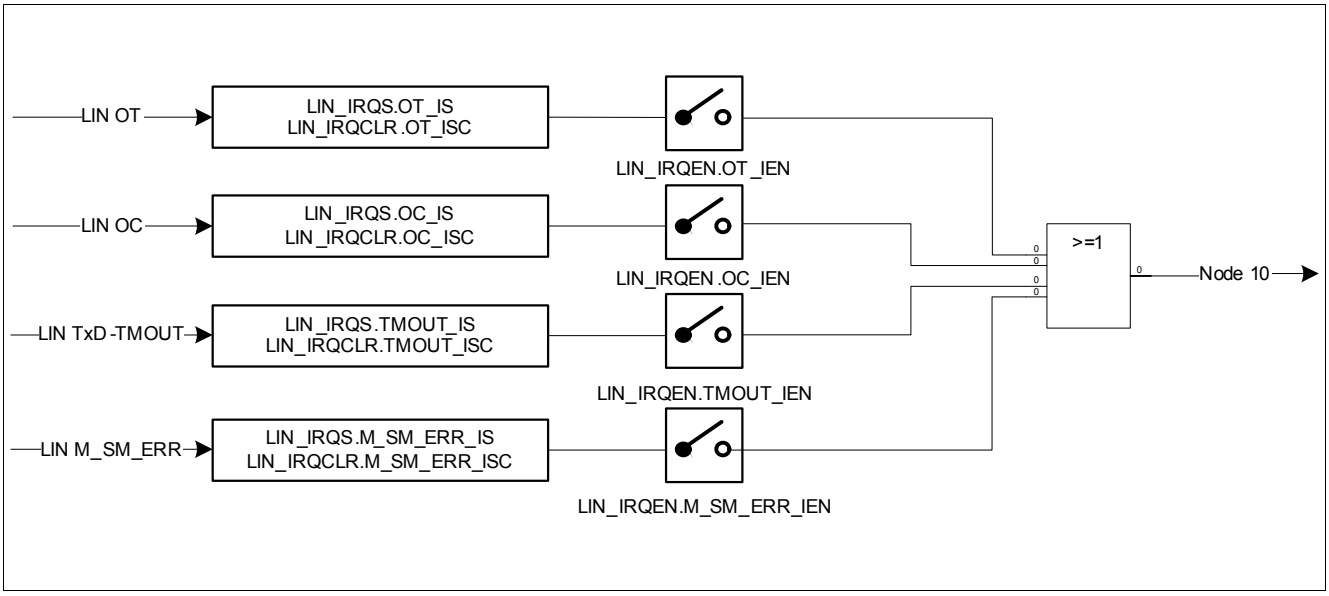

Figure 177 LIN Interrupt Signal Generation

21 High-Speed Synchronous Serial Interface SSC1/SSC2

21.1 Features

- Master and Slave Mode operation
  - Full-duplex or half-duplex operation
- Transmit and receive double buffered
- Flexible data format
  - Programmable number of data bits: 2 to 16 bits
  - Programmable shift direction: Least Significant Bit (LSB) or Most Significant Bit (MSB) shift first
  - Programmable clock polarity: idle low or high state for the shift clock
  - Programmable clock/data phase: data shift with leading or trailing edge of the shift clock
- Variable baud rate, e.g. 250kBaud - 8MBaud
- Compatible with Serial Peripheral Interface (SPI)
- Interrupt generation
  - On a transmitter empty condition
  - On a receiver full condition
  - On an error condition (receive, phase, baud rate, transmit error)
  - On a transfer complete condition
- Port direction selection, see **Chapter 15**

21.2 Introduction

The High-Speed Synchronous Serial Interface (SSC) supports both full-duplex and half-duplex serial synchronous communication. The serial clock signal can be generated by the SSC internally (master mode), using its own 16-Bit baud-rate generator, or can be received from an external master (slave mode). Data width, shift direction, clock polarity, and phase are programmable. This allows communication with SPI-compatible devices or devices using other synchronous serial interfaces.

Data is transmitted or received on lines TXD and RXD, which are normally connected to the pins MTSR (MasterTransmit/Slave Receive) and MRST (Master Receive/Slave Transmit). The clock signal is output via line MS_CLK (Master Serial Shift Clock) or input via line SS_CLK (Slave Serial Shift Clock). Both lines are normally connected to the pin SCLK. Transmission and reception of data are double-buffered.

21.2.1 Block Diagram

Figure 178 shows all functional relevant interfaces associated with the SSC Kernel.

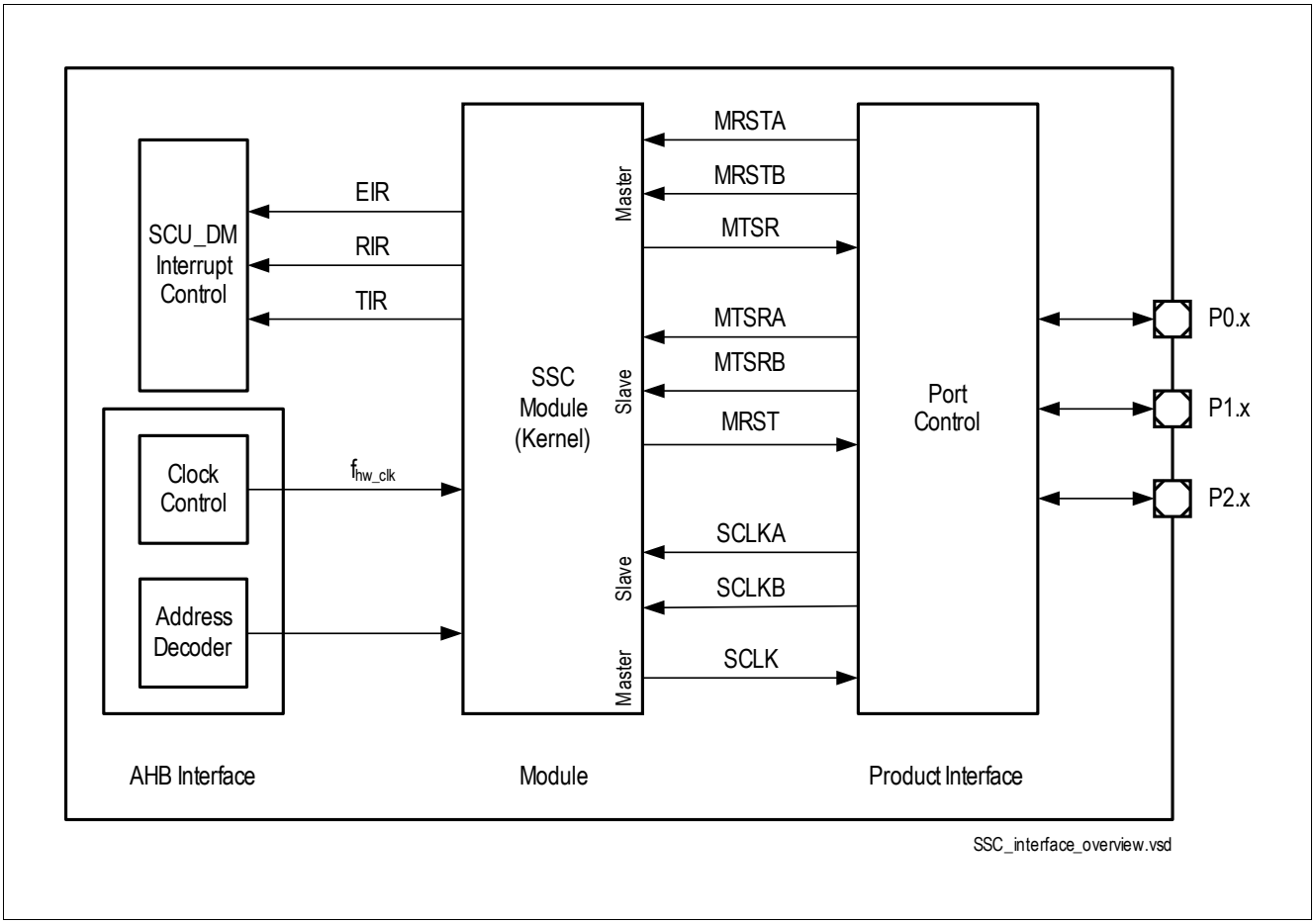

Figure 178 SSC Interface Diagram

21.3 Functional Description

21.3.1 SSC1 and SSC2 Mode Overview

The SSC supports full-duplex and half-duplex synchronous communication up to 20 MBaud (@ 40 MHz module clock). The serial clock signal can be generated by the SSC itself (Master Mode) or can be received from an external master (Slave Mode). Data width, shift direction, clock polarity, and phase are programmable. This allows communication with SPI-compatible devices. Transmission and reception of data is double-buffered. A 16-bit baud-rate generator provides the SSC with a separate serial clock signal.

The SSC can be configured in a very flexible way, so it can be used with other synchronous serial interfaces, can serve for master/slave or multimaster interconnections or can operate compatible with the popular SPI interface. Thus, the SSC can be used to communicate with shift registers (I/O expansion), peripherals (e.g. EEPROMs, etc.) or other controllers (networking). The SSC supports half-duplex and full-duplex communication. Data is transmitted or received on lines TXD and RXD, normally connected with pins MTSR (Master Transmit/Slave Receive) and MRST (Master Receive/Slave Transmit). The clock signal is output via line MS_CLK (Master Serial Shift Clock) or input via line SS_CLK (Slave Serial Shift Clock). Both lines are normally connected to pin SCLK.

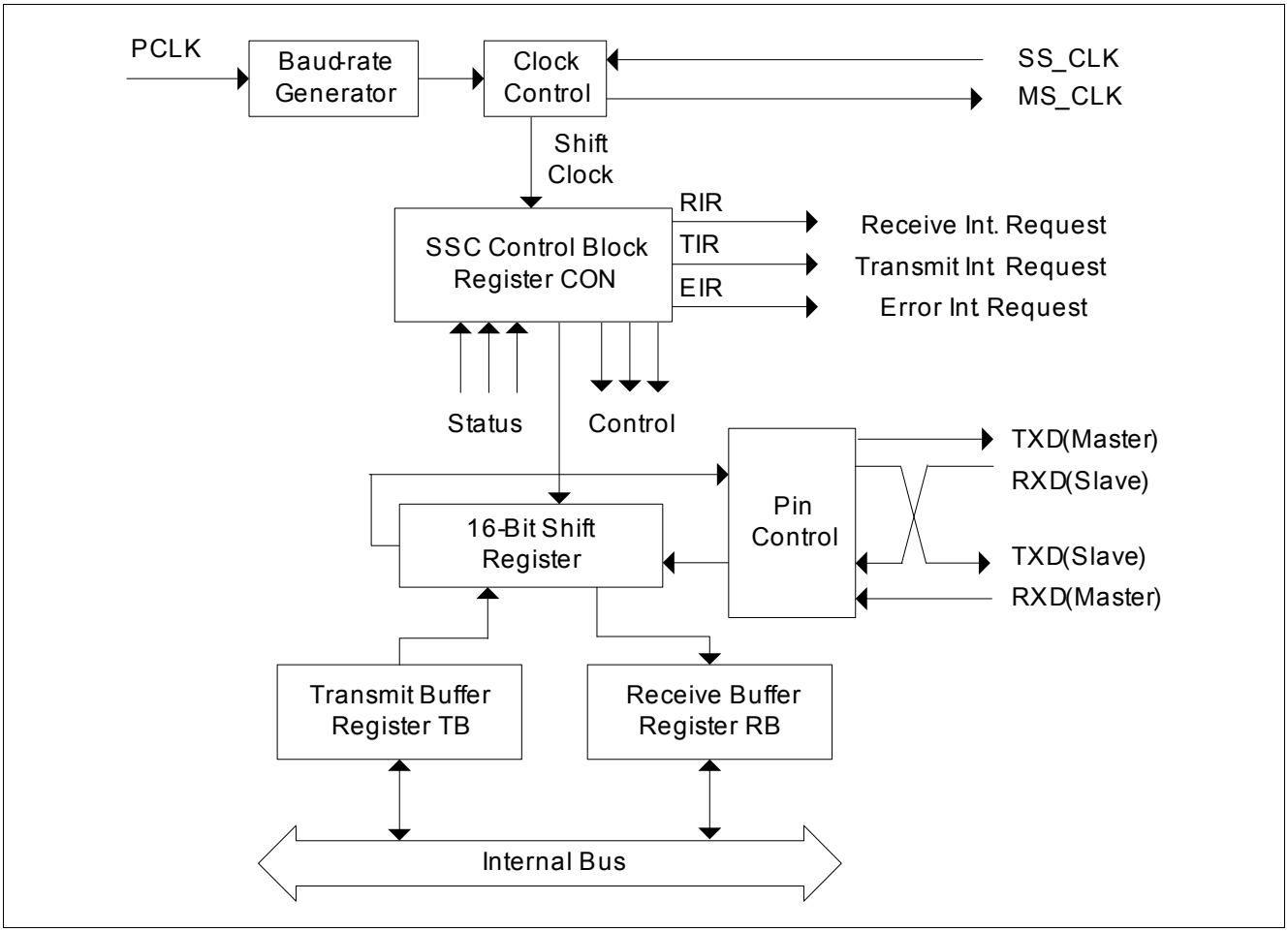

Figure 179 Synchronous Serial Channel SSC Block Diagram

21.3.2 Operating Mode Selection

The operating mode of the serial channel SSC is controlled by its control register CON. This register serves two purposes:

- During programming (SSC disabled by CON.EN = 0), it provides access to a set of control bits
- During operation (SSC enabled by CON.EN = 1), it provides access to a set of status flags.

The shift register of the SSC is connected to both the transmit lines and the receive lines via the pin control logic (see block diagram in **Figure 179**). Transmission and reception of serial data are synchronized and take place at the same time, i.e. the same number of transmitted bits is also received. Transmit data is written into the Transmit Buffer (TB) and is moved to the shift register as soon as this is empty. An SSC master (CON.MS = 1) immediately begins transmitting, while an SSC slave (CON.MS = 0) will wait for an active shift clock. When the transfer starts, the busy flag CON.BSY is set and the Transmit Interrupt Request line TIR will be activated to indicate that register TB may be reloaded again. When the programmed number of bits (2 … 16) has been transferred, the contents of the shift register are moved to the Receive Buffer RB and the Receive Interrupt Request line RIR will be activated. If no further transfer is to take place (TB is empty), CON.BSY will be cleared at the same time. Software should not modify CON.BSY, as this flag is hardware controlled.

Note: The SSC starts transmission and sets CON.BSY minimum two clock cycles after transmit data is written into TB. Therefore, it is not recommended to poll CON.BSY to indicate the start and end of a single transmission. Instead, interrupt service routine should be used if interrupts are enabled, or the interrupt flags IRCON1.TIR and IRCON1.RIR should be polled if interrupts are disabled.

Note: Only one SSC (etc.) can be master at a given time.

The transfer of serial data bits can be programmed in many respects:

- The data width can be specified from 2 bits to 16 bits
- A transfer may start with either the LSB or the MSB
- The shift clock may be idle low or idle high
- The data bits may be shifted with the leading edge or the trailing edge of the shift clock signal
- The baud rate may be set from 305.18 Baud up to 20 MBaud (@ 40 MHz module clock)
- The shift clock can be generated (MS_CLK) or can be received (SS_CLK)

These features allow the adaptation of the SSC to a wide range of applications requiring serial data transfer.

The Data Width Selection supports the transfer of frames of any data length, from 2-bit “characters” up to 8-bit “characters”. Starting with the LSB (CON.HB = 0) allows communication with SSC devices in Synchronous Mode or with 8051 like serial interfaces for example. Starting with the MSB (CON.HB = 1) allows operation compatible with the SPI interface.

Regardless of the data width selected and whether the MSB or the LSB is transmitted first, the transfer data is always right-aligned in registers TB and RB, with the LSB of the transfer data in bit 0 of these registers. The data bits are rearranged for transfer by the internal shift register logic. The unselected bits of TB are ignored; the unselected bits of RB will not be valid and should be ignored by the receiver service routine.

The Clock Control allows the adaptation of transmit and receive behavior of the SSC to a variety of serial interfaces. A specific shift clock edge (rising or falling) is used to shift out transmit data, while the other shift clock edge is used to latch in receive data. Bit CON.PH selects the leading edge or the trailing edge for each function. Bit CON.PO selects the level of the shift clock line in the idle state. Thus, for an idle-high clock, the leading edge is a falling one, a 1-to-0 transition (see **Figure 180**).

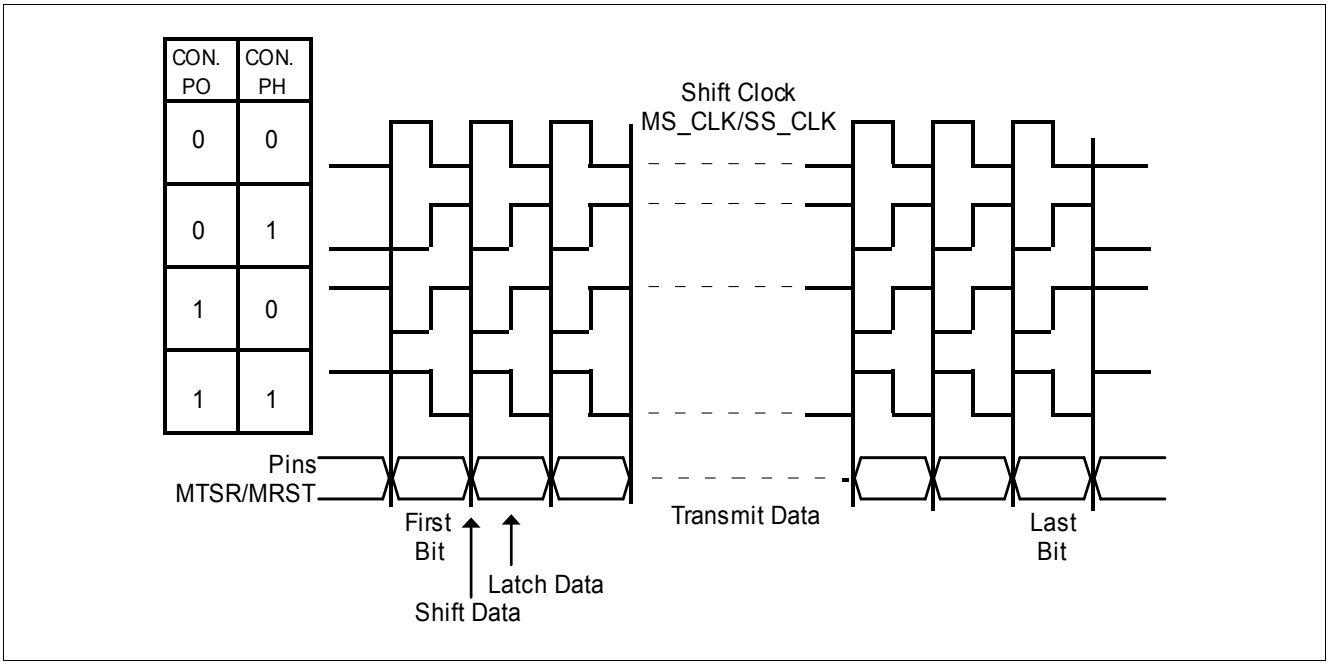

Figure 180 Serial Clock Phase and Polarity Options

21.3.3 Full-Duplex Operation

The various devices are connected through three lines. The definition of these lines is always determined by the master: the line connected to the master’s data output line TXD is the transmit line; the receive line is connected to its data input line RXD; the shift clock line is either MS_CLK or SS_CLK. Only the device selected for master operation generates and outputs the shift clock on line MS_CLK. Since all slaves receive this clock, their pin SCLK

must be switched to input mode. The output of the master's shift register is connected to the external transmit line, which in turn is connected to the slaves' shift register input. The output of the slaves' shift register is connected to the external receive line in order to enable the master to receive the data shifted out of the slave. The external connections are hard-wired, the function and direction of these pins is determined by the master or slave operation of the individual device.

Note: The shift direction shown in the figure applies for MSB-first operation as well as for LSB-first operation.

When initializing the devices in this configuration, one device must be selected for master operation while all other devices must be programmed for slave operation. Initialization includes the operating mode of the device's SSC and also the function of the respective port lines.

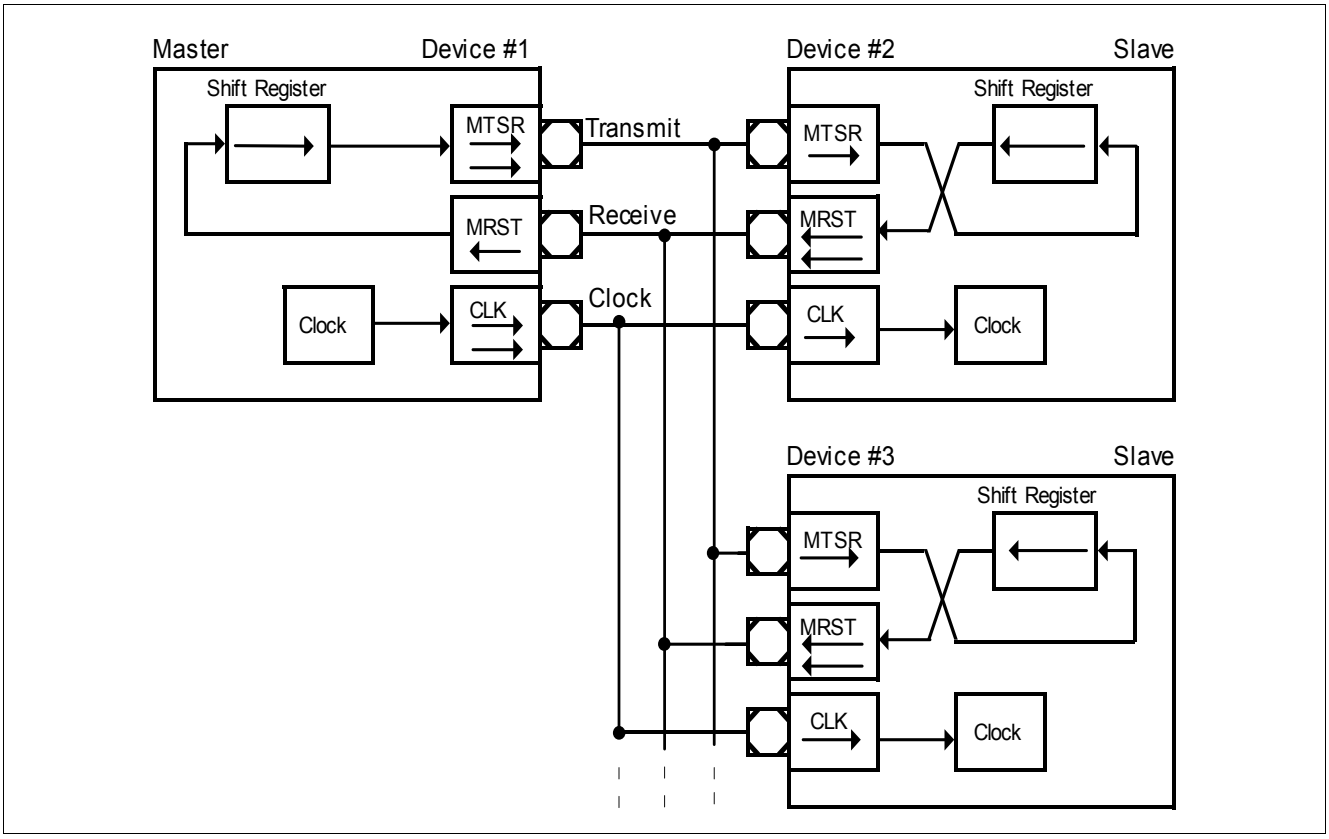

Figure 181 SSC Full-Duplex Configuration

The data output pins MRST of all slave devices are connected together onto the one receive line in the configuration shown in **Figure 181**. During a transfer, each slave shifts out data from its shift register. There are two ways to avoid collisions on the receive line due to different slave data:

- Only one slave drives the line, i.e. enables the driver of its MRST pin. All the other slaves must have their MRST pins programmed as input so only one slave can put its data onto the master's receive line. Only receiving data from the master is possible. The master selects the slave device from which it expects data either by separate select lines, or by sending a special command to this slave. The selected slave then switches its MRST line to output until it gets a de-selection signal or command.
- The slaves use open drain output on MRST. This forms a wired-AND connection. The receive line needs an external pull-up in this case. Corruption of the data on the receive line sent by the selected slave is avoided when all slaves not selected for transmission to the master only send ones (1s). Because this high level is not actively driven onto the line, but only held through the pull-up device, the selected slave can pull this line actively to a low-level when transmitting a zero bit. The master selects the slave device from which it expects data either by separate select lines or by sending a special command to this slave.

After performing the necessary initialization of the SSC, the serial interfaces can be enabled. For a master device, the alternate clock line will now go to its programmed polarity. The alternate data line will go to either 0 or 1 until the first transfer starts. After a transfer, the alternate data line will always remain at the logic level of the last transmitted data bit.

When the serial interfaces are enabled, the master device can initiate the first data transfer by writing the transmit data into register TB. This value is copied into the shift register (assumed to be empty at this time), and the selected first bit of the transmit data will be placed onto the TXD line on the next clock from the baud-rate generator (transmission starts only if CON.EN = 1). Depending on the selected clock phase, a clock pulse will also be generated on the MS_CLK line. At the same time, with the opposite clock edge, the master latches and shifts in the data detected at its input line RXD. This “exchanges” the transmit data with the receive data. Because the clock line is connected to all slaves, their shift registers will be shifted synchronously with the master’s shift register — shifting out the data contained in the registers, and shifting in the data detected at the input line. After the preprogrammed number of clock pulses (via the data width selection), the data transmitted by the master is contained in all the slaves’ shift registers, while the master’s shift register holds the data of the selected slave. In the master and all slaves, the contents of the shift register are copied into the receive buffer RB and the receive interrupt line RIR is activated.

A slave device will immediately output the selected first bit (MSB or LSB of the transfer data) at line RXD when the contents of the transmit buffer are copied into the slave's shift register. Bit CON.BSY is not set until the first clock edge at SS_CLK appears. The slave device will not wait for the next clock from the baud-rate generator, as the master does. The reason for this is that, depending on the selected clock phase, the first clock edge generated by the master may already be used to clock in the first data bit. Thus, the slave’s first data bit must already be valid at this time.

*Note: On the SSC, a transmission **and** a reception takes place at the same time, regardless of whether valid data has been transmitted or received.*

Note: The initialization of the CLK pin on the master requires some attention in order to avoid undesired clock transitions, which may disturb the other devices. Before the clock pin is switched to output via the related direction control register, the clock output level will be selected in the control register CON and the alternate output be prepared via the related ALTSEL register, or the output latch must be loaded with the clock idle level.

21.3.4 Half-Duplex Operation

In a Half-Duplex Mode, only one data line is necessary for both receiving **and** transmitting of data. The data exchange line is connected to both the MTSR and MRST pins of each device, the shift clock line is connected to the SCLK pin.

The master device controls the data transfer by generating the shift clock, while the slave devices receive it. Due to the fact that all transmit and receive pins are connected to the one data exchange line, serial data may be moved between arbitrary stations.

Similar to Full-Duplex Mode, there are two ways to avoid collisions on the data exchange line:

- Only the transmitting device may enable its transmit pin driver
- The non-transmitting devices use open drain output and send only ones.

Because the data inputs and outputs are connected together, a transmitting device will clock in its own data at the input pin (MRST for a master device, MTSR for a slave). By this method, any corruptions on the common data exchange line are detected if the received data is not equal to the transmitted data.

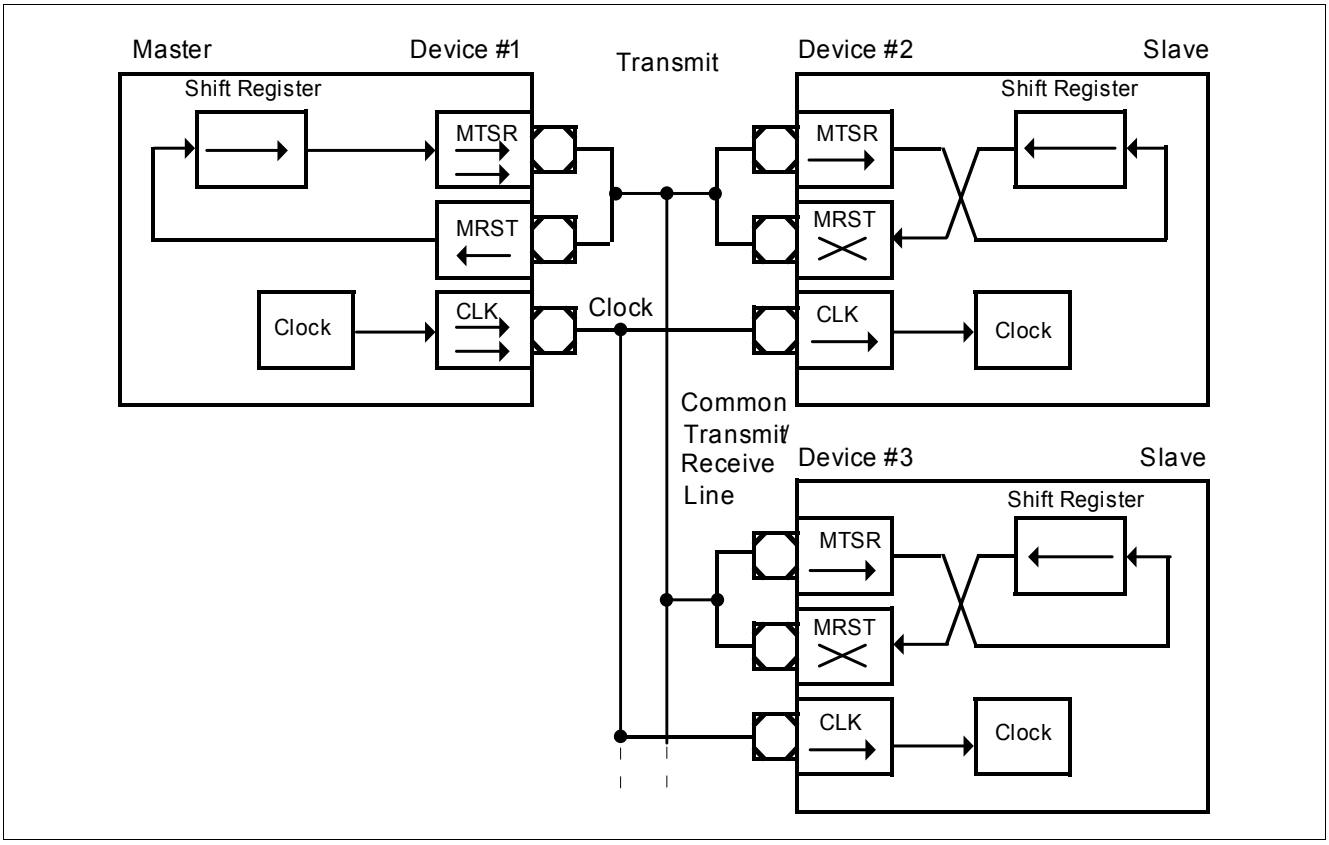

Figure 182 SSC Half-Duplex Configuration

21.3.5 Continuous Transfers

When the transmit interrupt request flag is set, it indicates that the transmit buffer TB is empty and ready to be loaded with the next transmit data. If TB has been reloaded by the time the current transmission is finished, the data is immediately transferred to the shift register and the next transmission will start without any additional delay. On the data line, there is no gap between the two successive frames. For example, two byte transfers would look the same as one word transfer. This feature can be used to interface with devices that can operate with or require more than 8 data bits per transfer. It is just a matter of software, how long a total data frame length can be. This option can also be used to interface to byte-wide and word-wide devices on the same serial bus, for instance.

Note: Of course, this can happen only in multiples of the selected basic data width, because it would require disabling/enabling of the SSC to reprogram the basic data width on-the-fly.

21.3.5.1 Port Control

The SSC uses three lines to communicate with the external world. Pin SCLK serves as the clock line, while pins MRST (Master Receive/Slave Transmit) and MTSR (Master Transmit/Slave Receive) serve as the serial data input/output lines. As shown in **Figure 178** these three lines (SCLK as input, Master Receive, Slave Receive) have all two inputs at the SSC Module kernel. Three bits in register PISEL define which of the two kernel inputs (A or B) are connected. This feature allows for each of the three SSC communication lines to be connected to two inputs coming from different port pins.

Operation of the SSC I/O lines depends on the selected operating mode (master or slave). The direction of the port lines depends on the operating mode. The SSC will automatically use the correct kernel output or kernel input line of the ports when switching modes. Port pins assigned as SSC I/O lines can be controlled in two ways:

- By hardware
- By software

When the SSC I/O lines are connected with dedicated pins typically hardware I/O control should be used. In this case, the two output signals reflect directly the state of the CON.EN and CON.MS bits (the M/S select line is inverted to the CON.MS bit definition).

When the SSC I/O lines are connected with bidirectional lines of general purpose I/O ports, typically software I/O control should be used. In this case port registers must be programmed for alternate output and input selection. When switching between master and slave mode, port registers must be reprogrammed.

21.3.6 Baud Rate Generation

The serial channel SSC has its own dedicated 16-bit baud-rate generator with 16-bit reload capability, allowing baud rate generation independent of the timers. **Figure 179** shows the baud-rate generator. **Figure 183** shows the baud-rate generator of the SSC in more detail.

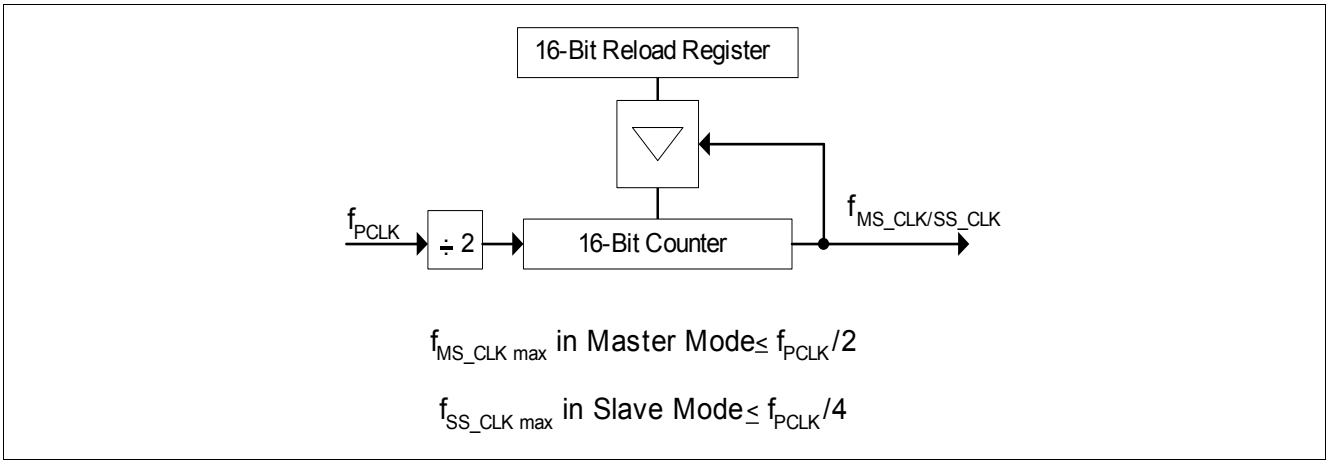

Figure 183 SSC Baud-rate Generator

The baud-rate generator is clocked with the module clock f_{hw_clk}. The timer counts downwards. Register BR is the dual-function Baud-rate Generator/Reload register. Reading BR, while the SSC is enabled, returns the contents of the timer. Reading BR, while the SSC is disabled, returns the programmed reload value. In this mode, the desired reload value can be written to BR.

Note: Never write to BR while the SSC is enabled.

The formulas below calculate either the resulting baud rate for a given reload value, or the required reload value for a given baud rate:

$$\text{Baud rate} = \frac{f_{hw_clk}}{2 \bullet (
 + 1)} \tag{21.1}$$

$$BR = \frac{f_{hw_clk}}{2 \bullet \text{Baud rate}} - 1 \tag{21.2}$$

 represents the contents of the reload register, taken as an unsigned 16-bit integer, while baud rate is equal to f_{MS_CLK/SS_CLK} as shown in **Figure 183**.

The maximum baud rate that can be achieved when using a module clock of 40 MHz is 20 MBaud in Master Mode (with
 = 0000_H) or 10 MBaud in Slave Mode (with
 = 0001_H).

Table 353 lists some possible baud rates together with the required reload values and the resulting bit times, assuming a module clock of 40 MHz.

Table 353 Typical Baud Rates of the SSC (f_{hw_clk} = 40 MHz)

Reload Value	Baud Rate (= f_{MS_CLK/SS_CLK})	Deviation
0000_H	20 MBaud (only in Master Mode)	0.0%
0001_H	10 MBaud	0.0%
0013_H	1 MBaud	0.0%
0027_H	500 kBaud	0.0%
$00C7_H$	100 kBaud	0.0%
$07CF_H$	10 kBaud	0.0%

Table 353 Typical Baud Rates of the SSC (f_{hw_clk} = 40 MHz) (cont'd)

Reload Value	Baud Rate (= f_{MS_CLK/SS_CLK})	Deviation
$4E1F_H$	1 kBaud	0.0%
$FFFF_H$	305.18 Baud	0.0%

21.3.7 Error Detection Mechanisms

The SSC is able to detect four different error conditions. Receive Error and Phase Error are detected in all modes; Transmit Error and Baud Rate Error apply only to Slave Mode. When an error is detected, the respective error flag is/can be set and an error interrupt request will be generated by activating the EIR line (see **Figure 184**) if enabled. The error interrupt handler may then check the error flags to determine the cause of the error interrupt. The error flags are not reset automatically but rather must be cleared by software after servicing. This allows servicing of some error conditions via interrupt, while the others may be polled by software.

Note: The error interrupt handler must clear the associated (enabled) error flag(s) to prevent repeated interrupt requests.

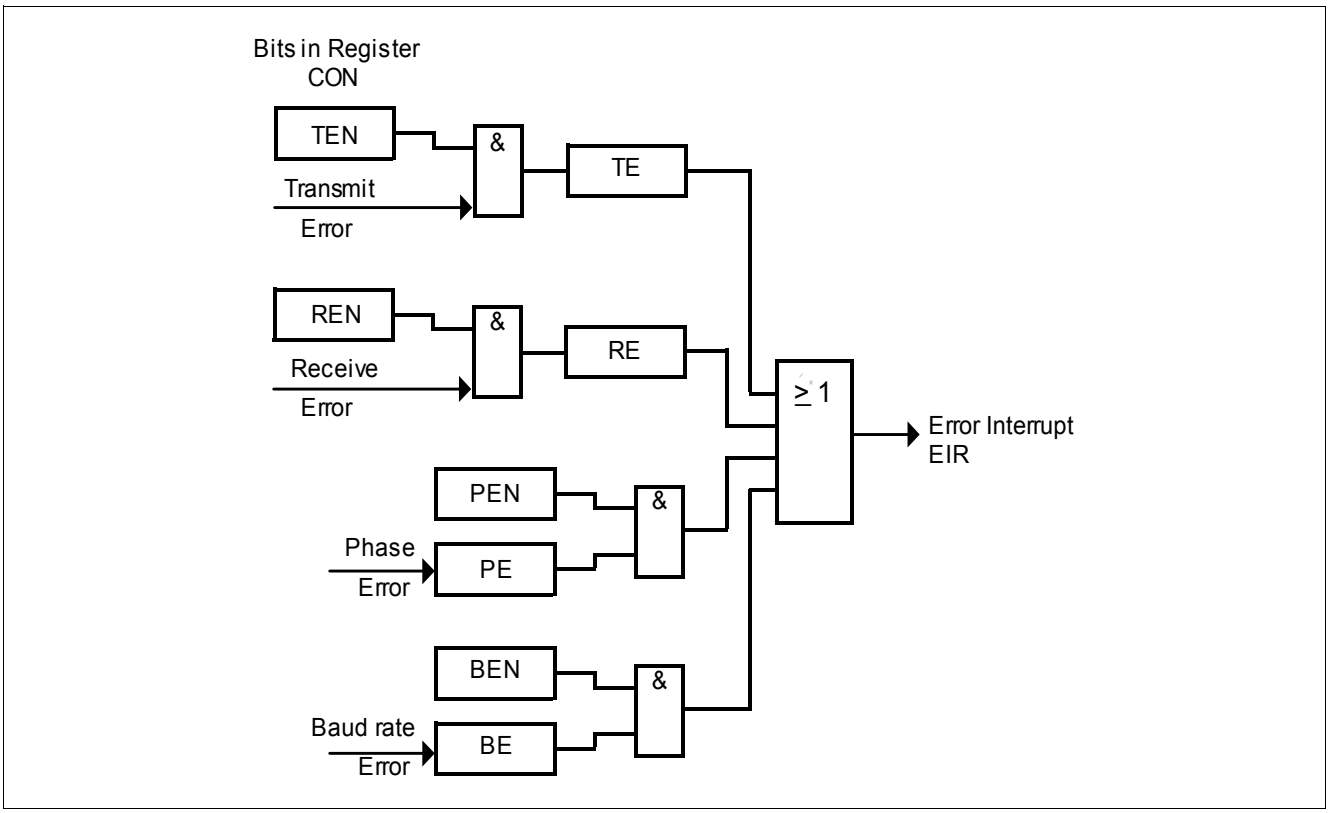

Figure 184 SSC Error Interrupt Control

A **Receive Error** (Master or Slave Mode) is detected when a new data frame is completely received but the previous data was not read out of the receive buffer register RB. This condition sets the error flag CON.RE and the error interrupt request line EIR, when enabled via CON.REN. The old data in the receive buffer RB will be overwritten with the new value and is irretrievably lost.

A **Phase Error** (Master or Slave Mode) is detected when the incoming data at pin MRST (Master Mode) or MTSR (Slave Mode), sampled with the same frequency as the module clock, changes between one cycle before and two cycles after the latching edge of the shift clock signal SCLK. This condition sets the error flag CON.PE and, when enabled via CON.PEN, the error interrupt request line EIR.

Note: When receiving and transmitting data in parallel, phase errors occur if the baud rate is configured to f_{hw_clk} / 2.

A **Baud Rate Error** (Slave Mode) is detected when the incoming clock signal deviates from the programmed baud rate by more than 100%, i.e. it is either more than double or less than half the expected baud rate. This condition sets the error flag CON.BE and, when enabled via CON.BEN, the error interrupt request line EIR. Using this error detection capability requires that the slave's baud-rate generator is programmed to the same baud rate as the master device. This feature detects false additional, or missing pulses on the clock line (within a certain frame).

Note: If this error condition occurs and bit CON.REN = 1, an automatic reset of the SSC will be performed in case of this error. This is done to re-initialize the SSC if too few or too many clock pulses have been detected.

Note: This error can occur after any transfer if the communication is stopped. This is the case due to the fact that the SSC module supports back-to-back transfers for multiple transfers. In order to handle this, the baud rate detector expects after a finished transfer immediately a next clock cycle for a new transfer.

A **Transmit Error** (Slave Mode) is detected when a transfer was initiated by the master (SS_CLK gets active) but the transmit buffer TB of the slave was not updated since the last transfer. This condition sets the error flag CON.TE and the error interrupt request line EIR, when enabled via CON.TEN. If a transfer starts while the transmit buffer is not updated, the slave will shift out the 'old' contents of the shift register, which normally is the data received during the last transfer. This may lead to corruption of the data on the transmit/receive line in half-duplex mode (open drain configuration) if this slave is not selected for transmission. This mode requires that slaves not selected for transmission only shift out ones; that is, their transmit buffers must be loaded with '$FFFF_H$' prior to any transfer.

Note: A slave with push/pull output drivers not selected for transmission, will normally have its output drivers switched. However, in order to avoid possible conflicts or misinterpretations, it is recommended to always load the slave's transmit buffer prior to any transfer.

The cause of an error interrupt request (receive, phase, baud rate, transmit error) can be identified by the error status flags in control register CON.

Note: In contrast to the error interrupt request line EIR, the error status flags CON.TE, CON.RE, CON.PE, and CON.BE, are not reset automatically upon entry into the error interrupt service routine, but must be cleared by software.

21.4 Interrupts

The three SSC interrupts can be separately enabled or disabled by setting or clearing their corresponding enable bits in SFR SCU_MODIEN.

For a detailed description of the various interrupts see **Section 21.3**. An overview is given in **Table 354**.

Table 354 SSC Interrupt Sources

Interrupt	Signal	Description
Transmission starts	TIR	Indicates that the transmit buffer can be reloaded with new data.
Transmission ends	RIR	The configured number of bits have been transmitted and shifted to the receive buffer.
Receive Error	EIR	This interrupt occurs if a new data frame is completely received and the last data in the receive buffer was not read.
Phase Error	EIR	This interrupt is generated if the incoming data changes between one cycle before and two cycles after the latching edge of the shift clock signal SCLK.
Baud Rate Error (Slave Mode only)	EIR	This interrupt is generated when the incoming clock signal deviates from the programmed baud rate by more than 100%.
Transmit Error (Slave Mode only)	EIR	This interrupt is generated when TB was not updated since the last transfer if a transfer is initiated by a master.

21.5 SSC Kernel Registers

There are two SSC kernels in the TLE9844, namely SSC1 and SSC2. Table 355 shows the SSC module base addresses.

Table 355 Register Address Space

Module	Base Address	End Address	Note
SSC1	48024000_H	$48025FFF_H$	Synchronous Serial Interface 1
SSC2	48026000_H	$48027FFF_H$	Synchronous Serial Interface 2

Table 356 Register Overview

Register Short Name	Register Long Name	Offset Address	Reset Value
SSC Kernel Registers, Port Input Select Register			
SSC_PISEL	Port Input Select Register	00_H	$0000\ 0000_H$
SSC Kernel Registers, Configuration Register			
SSC_CON	Control Register	04_H	$0000\ 0000_H$
SSC_ISRCLR	Interrupt Status Register Clear	14_H	$0000\ 0000_H$
SSC Kernel Registers, Baud Rate Timer Reload Register			
SSC_BR	Baud Rate Timer Reload Register	10_H	$0000\ 0000_H$
SSC Kernel Registers, Transmitter Buffer Register			
SSC_TB	Transmitter Buffer Register	08_H	$0000\ 0000_H$
SSC Kernel Registers, Receiver Buffer Register			
SSC_RB	Receiver Buffer Register	$0C_H$	$0000\ 0000_H$

The registers are addressed wordwise.

21.5.1 Port Input Select Register

Port Input Select Register

The PISEL register controls the receiver input selection of the SSC module. In the implementation of TLE9844, the PISEL register is not used.

SSC_PISEL	Offset	Reset Value
Port Input Select Register	**00_H**	**see Table 357**

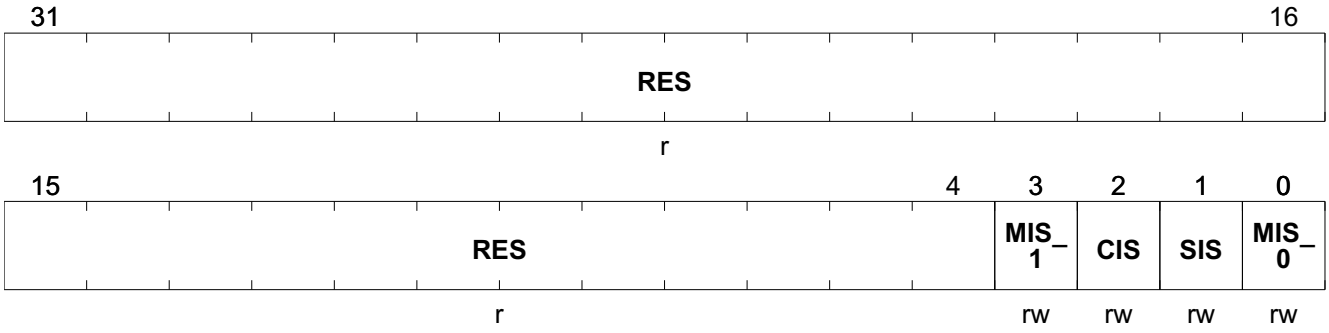

Field	Bits	Type	Description
RES	31:4	r	**Reserved** Always read as 0; should be written with 0.
MIS_1	3	rw	**Master Mode Input Select Bit 1 (Master Mode only)** 0_B **Default** Inputs selected according to MIS_0. 1_B **Do not use** Connects to unused pins.
CIS	2	rw	**Clock Input Select (Slave Mode only)** 0_B **SSCx_S_SCK** (x = 1 or 2, dependant form current SSC), see **Chapter 15.4**. 1_B **SSC12_S_SCK** for both SSCs. See **Chapter 15.4**.
SIS	1	rw	**Slave Mode Input Select (Slave Mode only)** 0_B **SSCx_S_MTSR** (x = 1 or 2, dependant form current SSC), see **Chapter 15.4**. 1_B **SSC12_S_MTSR** for both SSCs. See **Chapter 15.4**.
MIS_0	0	rw	**Master Mode Input Select Bit 0 (Master Mode only)** 0_B **SSCx_M_MRST** (x = 1 or 2, dependant form current SSC), see **Chapter 15.4**. 1_B **SSC12_M_MRST** for both SSCs. See **Chapter 15.4**.

Table 357 RESET of SSC_PISEL

Register Reset Type	Reset Values	Reset Short Name	Reset Mode	Note
RESET_TYPE_3	00000000_H	RESET_TYPE_3		

21.5.2 Configuration Register

The operating mode of the serial channel SSC is controlled by the control register CON. This register contains control bits for mode and error check selection, and status flags for error identification. Depending on bit EN, either control functions or status flags and master/slave control are enabled.

Control Register

SSC_CON	Offset	Reset Value
Control Register	**04_H**	**see Table 358**

31			29	28	27	26	25	24
RES				BSY	BE	PE	RE	TE
r				r	r	r	r	r

23			20	19			16
RES				BC			
r				r			

15	14	13	12	11	10	9	8
EN	MS	RES	AREN	BEN	PEN	REN	TEN
rw	rw	r	rw	rw	rw	rw	rw

7	6	5	4	3			0
LB	PO	PH	HB	BM			
rw	rw	rw	rw	rw			

Field	Bits	Type	Description
RES	31:29	r	**Reserved** Always read as 0; should be written with 0.
BSY	28	r	**Busy Flag** Can only be read when EN=1 (operating mode). Invalid data when EN=0 (programming mode). Set while a transfer is in progress. *Note: This bit is not to be written to.*
BE	27	r	**Baud Rate Error Flag** Can only be read when EN=1 (operating mode). Invalid data when EN=0 (programming mode). 0_B **NO** error. 1_B **ERROR** More than factor 2 or 0.5 between slave's actual and expected baud rate.
PE	26	r	**Phase Error Flag** Can only be read when EN=1 (operating mode). Invalid data when EN=0 (programming mode). 0_B **NO** error. 1_B **ERROR** Received data changes around sampling clock edge.
RE	25	r	**Receive Error Flag** Can only be read when EN=1 (operating mode). Invalid data when EN=0 (programming mode). 0_B **NO** error. 1_B **ERROR** Reception completed before the receive buffer was read.

Field	Bits	Type	Description
TE	24	r	**Transmit Error Flag** Can only be read when EN=1 (operating mode). Invalid data when EN=0 (programming mode). 0_B **NO** error. 1_B **ERROR** Transfer starts with the slave's transmit buffer not being updated.
RES	23:20	r	**Reserved** Returns 0 if read; should be written with 0.
BC	19:16	r	**Bit Count Field** Can only be read when EN=1 (operating mode). Invalid data when EN=0 (programming mode). Shift counter is updated with every shift bit. *Note: This bit field is not to be written to.*
EN	15	rw	**Enable Bit** *Note: The effect of EN bit becomes visible on the next write to the CON register.* 0_B **Programming Mode** Transmission and reception disabled. Access to control bits. 1_B **Operating Mode** Transmission and reception enabled. Access to status flags and M/S control.
MS	14	rw	**Master Select** 0_B **SLAVE** Mode. Operate on shift clock received via SCLK. 1_B **MASTER** Mode. Generate shift clock and output it via SCLK.
RES	13	r	**Reserved** Returns 0 if read; should be written with 0.
AREN	12	rw	**Automatic Reset Enable** Can only be accessed when EN=0 (programming mode). Invalid data when EN=1 (operating mode). 0_B **N/A** No additional action upon a baud rate error. 1_B **RESET** The SSC is automatically reset upon a baud rate error.
BEN	11	rw	**Baud Rate Error Enable** Can only be accessed when EN=0 (programming mode). Invalid data when EN=1 (operating mode). 0_B **IGNORE** baud rate errors. 1_B **CHECK** baud rate errors.
PEN	10	rw	**Phase Error Enable** Can only be accessed when EN=0 (programming mode). Invalid data when EN=1 (operating mode). 0_B **IGNORE** phase errors. 1_B **CHECK** phase errors.

Field	Bits	Type	Description
REN	9	rw	**Receive Error Enable** Can only be accessed when EN=0 (programming mode). Invalid data when EN=1 (operating mode). 0_B **IGNORE** receive errors. 1_B **CHECK** receive errors.
TEN	8	rw	**Transmit Error Enable** Can only be accessed when EN=0 (programming mode). Invalid data when EN=1 (operating mode). 0_B **IGNORE** transmit errors. 1_B **CHECK** transmit errors.
LB	7	rw	**Loop Back Control** Can only be accessed when EN=0 (programming mode). Invalid data when EN=1 (operating mode). 0_B **NORMAL** output. 1_B **LB** Receive input is connected with transmit output (half-duplex mode).
PO	6	rw	**Clock Polarity Control** Can only be accessed when EN=0 (programming mode). Invalid data when EN=1 (operating mode). 0_B **LOW** Idle clock line is low, leading clock edge is low-to-high transition. 1_B **HIGH** Idle clock line is high, leading clock edge is high-to-low transition.
PH	5	rw	**Clock Phase Control** Can only be accessed when EN=0 (programming mode). Invalid data when EN=1 (operating mode). 0_B **SHIFT** transmit data on the leading clock edge, latch on trailing edge. 1_B **LATCH** receive data on leading clock edge, shift on trailing edge.
HB	4	rw	**Heading Control** Can only be accessed when EN=0 (programming mode). Invalid data when EN=1 (operating mode). 0_B **LSB** Transmit/Receive LSB First. 1_B **MSB** Transmit/Receive MSB First.
BM	3:0	rw	**Data Width Selection** Can only be accessed when EN=0 (programming mode). Invalid data when EN=1 (operating mode). 0000_B Reserved. Do not use this combination. 0001_B - 1111_B Transfer Data Width is 2 … 16 bits (BM+1).

Table 358 RESET of SSC_CON

Register Reset Type	Reset Values	Reset Short Name	Reset Mode	Note
RESET_TYPE_3	00000000_H	RESET_TYPE_3		

Interrupt Status Register Clear

SSC_ISRCLR	Offset	Reset Value
Interrupt Status Register Clear	14_H	see Table 359

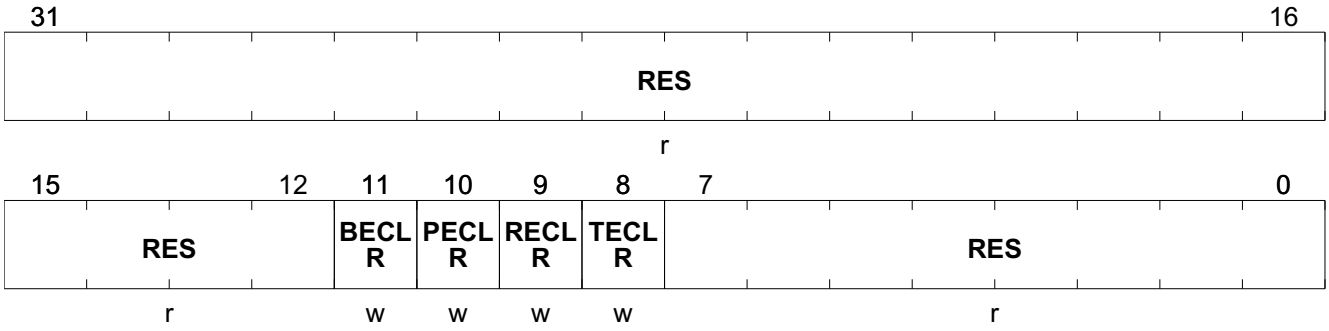

Field	Bits	Type	Description
RES	31:12	r	**Reserved** Returns 0 if read; should be written with 0.
BECLR	11	w	**Baud Rate Error Flag Clear** 0_B **NO** No error clear. 1_B **CLEAR** Error clear.
PECLR	10	w	**Phase Error Flag Clear** 0_B **NO** No error clear. 1_B **CLEAR** Error clear.
RECLR	9	w	**Receive Error Flag Clear** 0_B **NO** No error clear. 1_B **CLEAR** Error clear.
TECLR	8	w	**Transmit Error Flag Clear** 0_B **NO** No error clear. 1_B **CLEAR** Error clear.
RES	7:0	r	**Reserved** Always read as 0

Table 359 RESET of SSC_ISRCLR

Register Reset Type	Reset Values	Reset Short Name	Reset Mode	Note
RESET_TYPE_3	00000000_H	RESET_TYPE_3		

21.5.3 Baud Rate Timer Reload Register

The SSC baud rate timer reload register BR contains the 16-bit reload value for the baud rate timer.

Baud Rate Timer Reload Register

SSC_BR	Offset	Reset Value
Baud Rate Timer Reload Register	10_H	see Table 360

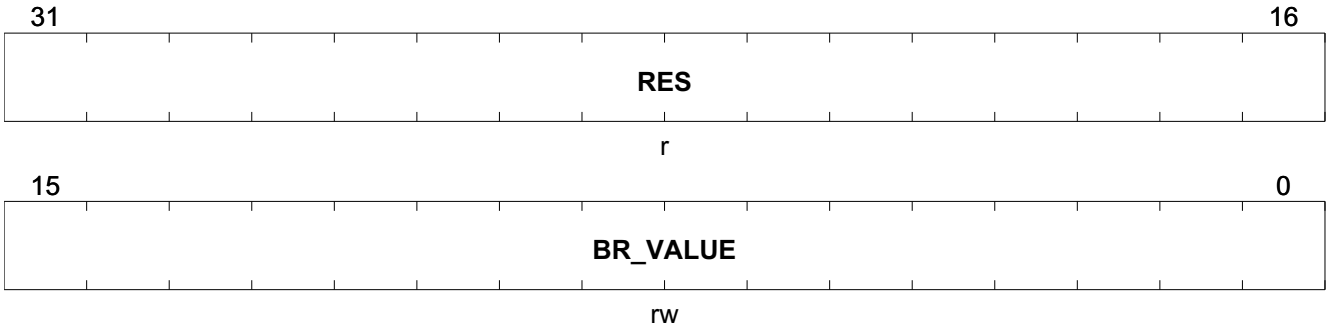

Field	Bits	Type	Description
RES	31:16	r	**Reserved** Returns 0 if read; should be written with 0.
BR_VALUE	15:0	rw	**Baud Rate Timer/Reload Register Value** Reading BR returns the 16-bit contents of the baud rate timer. Writing BR loads the baud rate timer reload register with BR_VALUE.

Table 360 RESET of SSC_BR

Register Reset Type	Reset Values	Reset Short Name	Reset Mode	Note
RESET_TYPE_3	00000000_H	RESET_TYPE_3		

21.5.4 Transmitter Buffer Register

Transmitter Buffer Register

The SSC transmitter buffer register TB contains the transmit data value.

SSC_TB	Offset	Reset Value
Transmitter Buffer Register	08_H	Table 361

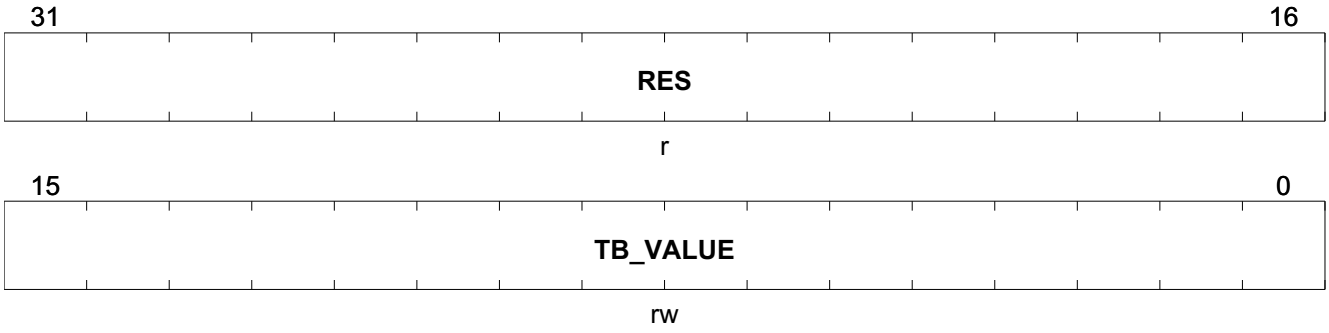

Field	Bits	Type	Description
RES	31:16	r	**Reserved** Returns 0 if read; should be written with 0.
TB_VALUE	15:0	rw	**Transmit Data Register Value** TB_VALUE is the data value to be transmitted. Unselected bits of TB are ignored during transmission.

Table 361 RESET of SSC_TB

Register Reset Type	Reset Values	Reset Short Name	Reset Mode	Note
RESET_TYPE_3	00000000_H	RESET_TYPE_3		

21.5.5 Receiver Buffer Register

Receiver Buffer Register

The SSC receiver buffer register RB contains the receive data value.

SSC_RB	Offset	Reset Value
Receiver Buffer Register	$0C_H$	see Table 362

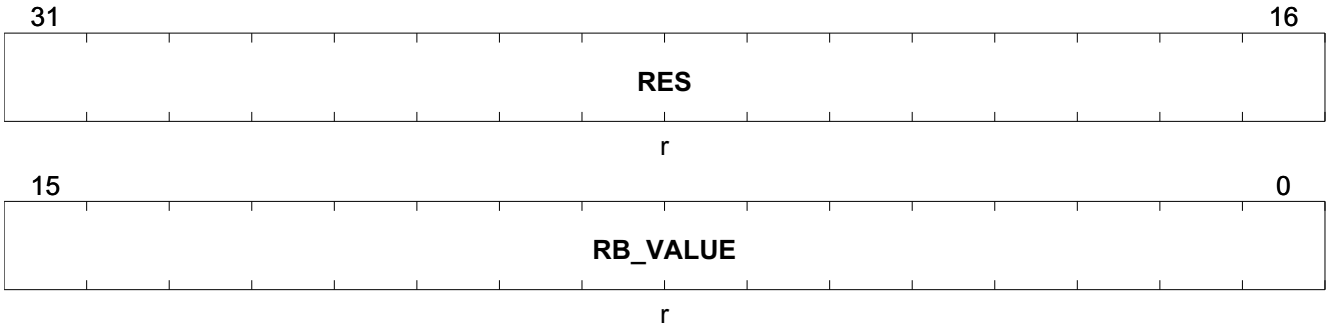

Field	Bits	Type	Description
RES	31:16	r	**Reserved** Returns 0 if read; should be written with 0.
RB_VALUE	15:0	r	**Receive Data Register Value** RB contains the received data value RB_VALUE. Unselected bits of RB will be not valid and should be ignored.

Table 362 RESET of SSC_RB

Register Reset Type	Reset Values	Reset Short Name	Reset Mode	Note
RESET_TYPE_3	00000000_H	RESET_TYPE_3		

21.6 Output multiplexing

In case the multiplexed SSC-Port (SSC12_*) should be used, the outputs can be selected (from SSC1 or from SSC2). Please use the bits SSC_* in register SCU_MODPISEL for this purpose.

22 Measurement Unit

22.1 Features

- 1 x 10 Bit ADC with 13 Inputs including attenuator allowing measurement of high voltage input signals
- Supply Voltage Attenuators with attenuation of **VBAT_SENSE, VS, MONx, P2.x**.
- 1 x 8 Bit ADC with 7 Inputs including attenuator allowing measurement of high voltage input signals
- Supply Voltage Attenuators with attenuation of **VS, VDDEXT, VDDP**, **VBG, VDDC, TSENSE_LS, TSENSE_CENTRAL**.
- VBG monitoring of 8 Bit ADC to support functional safety requirements.
- Temperature Sensor for monitoring the chip temperature and Low Side module temperature.
- Supplement Block with Reference Voltage Generation, Bias Current Generation, Voltage Buffer for NVM Reference Voltage, Voltage Buffer for Analog Module Reference Voltage and Test Interface.

22.2 Introduction

The measurement unit is a functional unit that comprises the following associated sub-modules:

Table 363 Measurement functions and associated modules

Module Name	Modules	Functions
Central Functions Unit	Bandgap reference circuit + current reference circuit	The bandgap-reference sub-module provides two reference voltages 1. an accurate reference voltage for the 10-bit and 8-bit ADCs. A local dedicated bandgap circuit is implemented to avoid deterioration of the reference voltage arising e.g. from crosstalk or ground voltage shift. 2. the reference voltage for the NVM module
10 Bit ADC (ADC1)	10-bit ADC module with 13 multiplexed analog inputs	VBAT_SENSE, VS and MONx measurement. Six (5V) analog inputs from Port 2.x
8 Bit ADC (ADC2)	8-bit ADC module with 7 multiplexed inputs	VS/VDDEXT/VDDP/VBG/VDDC/TSENSE_LS and TSENSE_CENTRAL measurement.
Temperature Sensor	Temperature sensor readout amplifier with two multiplexed ΔVbe-sensing elements	Generates outputs voltage which is a linear function of the local chip (Tj) temperature.
Measurement Core Module	Digital signal processing and ADC control unit	1. Generates the control signal for the 8-bit ADC 2 and the synchronous clock for the switched capacitor circuits (temperature sensor) 2. Performs digital signal processing functions and provides status outputs for interrupt generation.

22.2.1 Block Diagram

The Structure of the Measurement Functions Module is shown in the following figure.

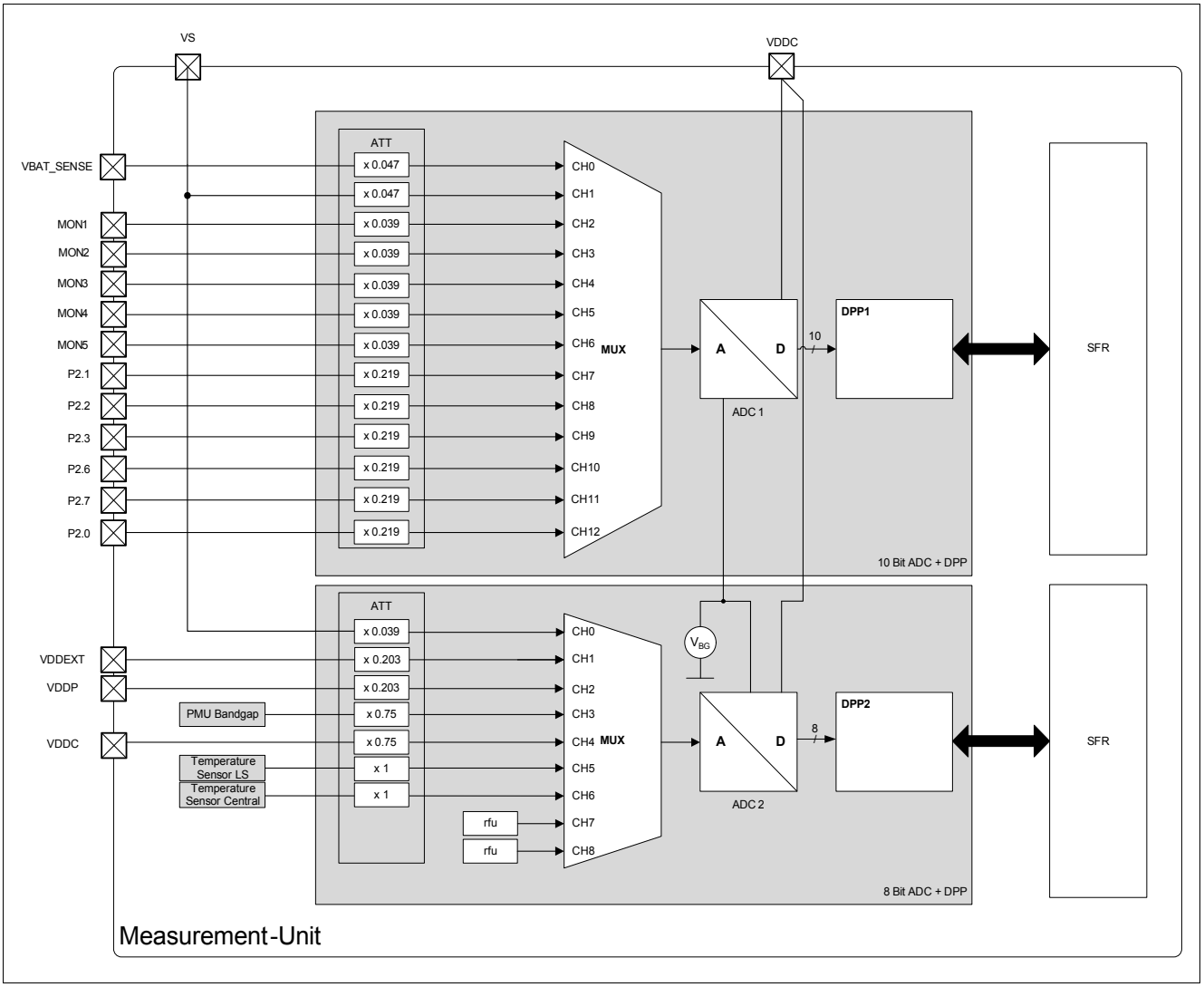

Figure 185 TLE984xQX Measurement Unit-Overview

22.2.2 Measurement Unit Register Overview

Table 364 Register Address SpaceAddress Space for Measurement Unit Register s

Module	Base Address	End Address	Note
MF	48018000_H	$4801BFFF_H$	Measurement Unit

The registers are addressed wordwise.

22.3 8 Bit - 10 Channel ADC Core

The 8 Bit ADC Core operates at the VDDC Supply Voltage. This enables the user to operate the measurement system down to reset threshold. The ADC can also be operated independently form the DPP unit. This enables the user to build up a software controlled measurement cycle. The main features of the 8 Bit ADC core are listed below.

Module Features

- Conversion time = 15 system clock cycles.
- programmable sampling time (4 to 22 MCLK cycles, default: 12)
- Scalable clock frequency from 10 - 30 MHz.

The next chapter shows the channel allocation of the 8 Bit ADC Core.

22.3.1 8 Bit ADC Channel Allocation

The allocation of the 6 Channels of ADC2 is sketched below:

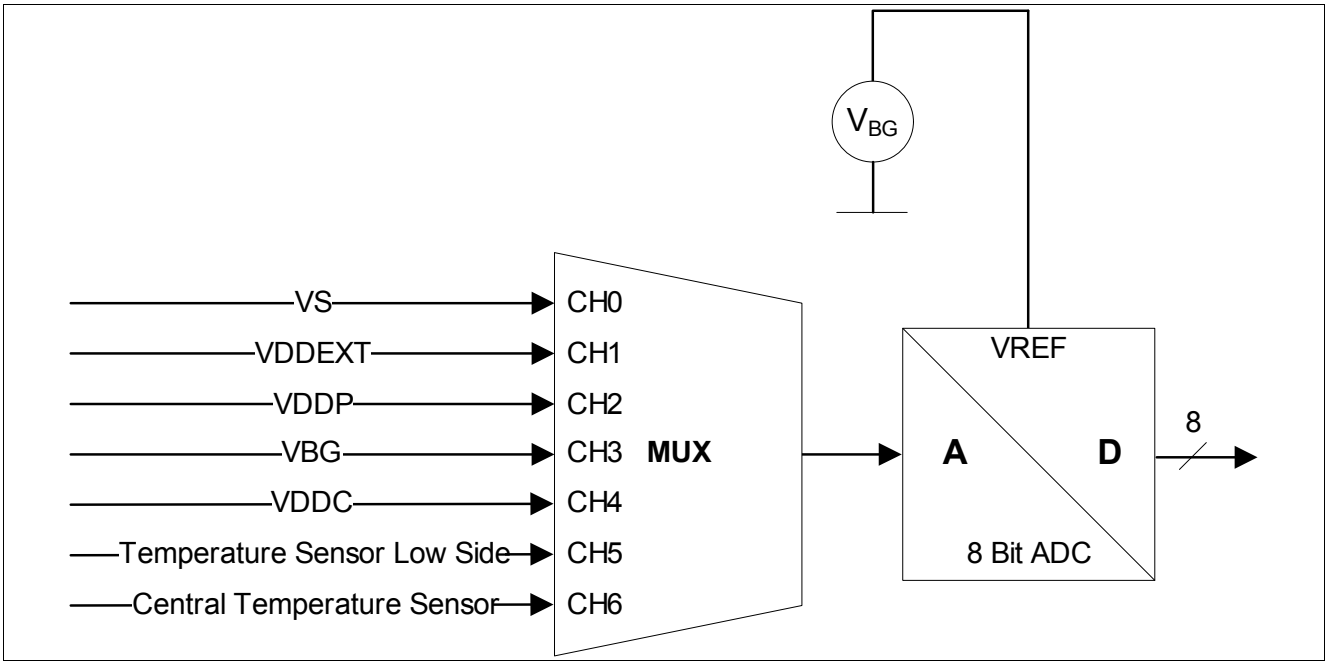

Figure 186 8 Bit ADC (ADC2) Channel Allocation

- VS Pin Voltage Measurement.
- VDDEXT Pin Voltage Measurement.
- VDDP Pin Voltage Measurement.
- VDDC Pin Voltage Measurement.
- ADC2 Reference Voltage Check (VBG).
- Device Temperature Measurement (T_j).
- Power Management Unit Temperature Measurement (T_j).

22.3.2 Transfer Characteristics of ADC2

The transfer function of ADC2 can be expressed by the equation below:

(13)

$$ADC2out = floor\left(\frac{Vin * Gain_{CHx}}{Vlsb} + 1\right)$$

where Vin is the input voltage and $Gain_{CHx}$ the individual Channel Gain. The LSB Voltage is calculated:

(14)

$$Vlsb = \frac{Vref}{256}$$

where **Vref** is V_{BG} **(P_9.1.10).**

A detailed specification of both A/D-converters is given in Chapter **Electrical Characteristics**. The Gain for each channel can be found in the table included in the following chapter.

22.3.3 Detailed ADC2 Measurement Channel Description

Table 365 ADC2 Channel Selection and Voltage Ranges

Requirements for TLE984xQX 8-bit ADC Measurements					Implementation based on HV-ADC concept			
Channel #	**Measurement Input Pin**	**Channel_sel**	**Gain of channel**	**Settings**	**Vin_FS [V] @V_{BG}**	**N=128*V_{BG}/Vin_max**	**Input Voltage Range**	**Note**
0	VS	00000	5/128	High voltage input	31.49	4.92	2V to FS	-
3	VDDEXT	00011	26/128	High voltage input	6.06	28.62545455	0V to FS	–
4	VDDP	00100	26/128	Medium voltage input	6.06	28.62545455	0V to FS	–
29	VDDC	11101	96/128	ana_in_gaint [1:0]= ’10’ default	1.64	–	0.6V to FS	
30	VDDC	11110	96/128	ana_in_gaint [1:0]= ’10’	1.64	–	0.6V to FS	–
31	Temperature Sensor	11111	96/128	ana_in_gaint [1:0]= ’10’	1.64	–	0.6V to FS	–

22.3.4 8 Bit - 10 Channel Control Register

The ADC2 control register is located in the **Measurement Core Module** Block.

22.4 10 Bit - 12 Channel ADC Core

The 10 Bit ADC is using Port 2.x as inputs. The configuration possibilities of the input channels is shown below:

22.4.1 10 Bit ADC Channel Allocation

The allocation of the 12 Channels of ADC1 is sketched below:

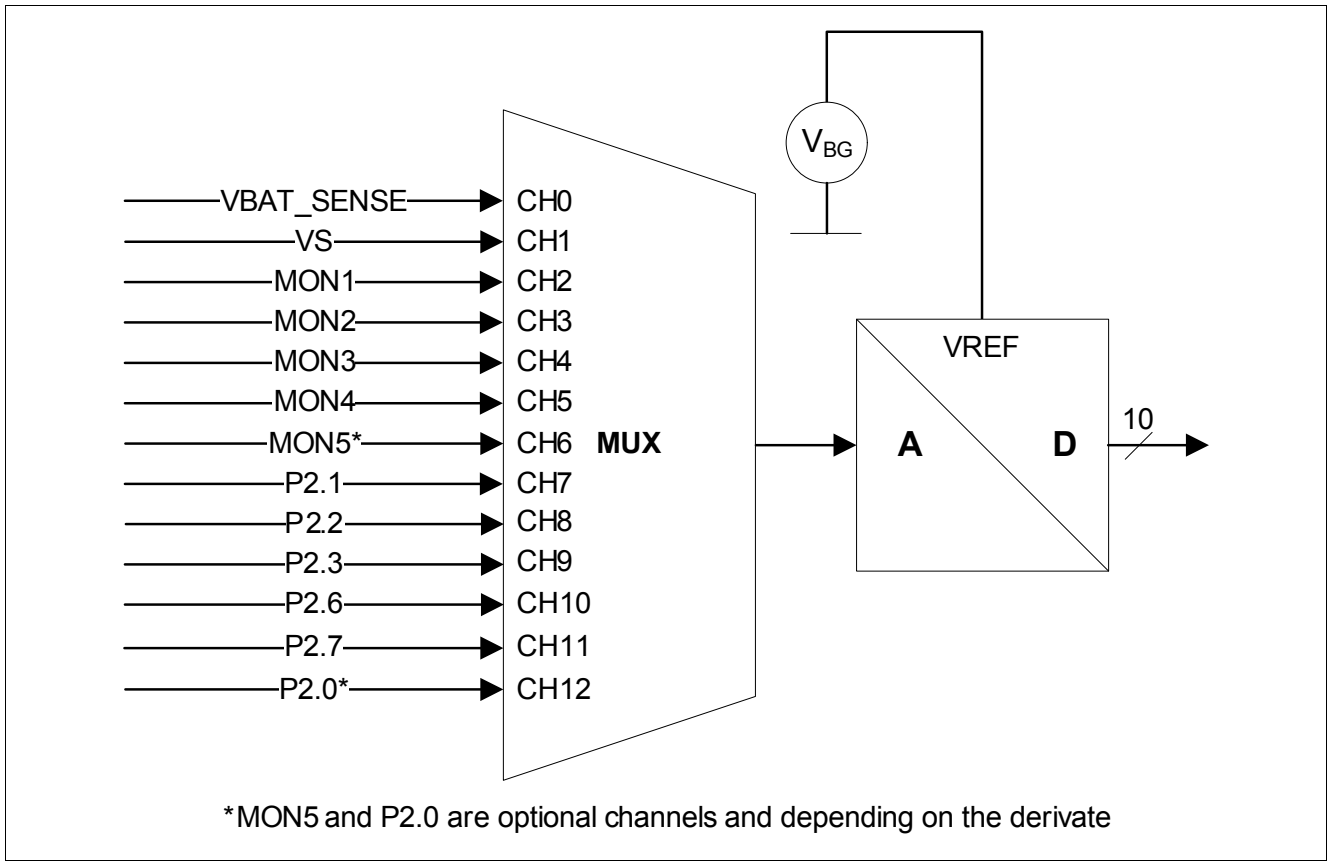

Figure 187 10 Bit ADC (ADC1) Channel Allocation

- VS Pin Voltage Measurement.
- VBAT_SENSE Pin Voltage Measurement.
- MON1-5 Pin Voltage Measurement.
- P2.x Pin Voltage Measurement.

Table 366 ADC1 Channel Selection and Voltage Ranges

Requirements for TLE984xQX 10-bit ADC Measurements				Implementation based on HV-ADC concept		
Channel #	**Measurement Input Pin**	**Channel_sel**	**Gain of channel**	**Vin_FS [V] @V_{BG}**	**Input Switch Type**	**Note**
0	vsense_vbat_ai	00000	12/256	25.6	HVP_CP	–
1	vsense_vs_ai	00001	12/256	25.6	HVP_CP	–
2	vsense_vmon1_ai	00010	10/256	30.7	HVP_CP	–
3	vsense_vmon2_ai	00011	10/256	30.7	HVP_CP	–
4	vsense_vmon3_ai	00100	10/256	30.7	HVP_CP	–
5	vsense_vmon4_ai	00101	10/256	30.7	HVP_CP	–

Table 366 ADC1 Channel Selection and Voltage Ranges (cont'd)

Requirements for TLE984xQX 10-bit ADC Measurements				Implementation based on HV-ADC concept		
Channel #	**Measurement Input Pin**	**Channel _sel**	**Gain of channel**	**Vin_FS [V] @V_{BG}**	**Input Switch Type**	**Note**
6	vsense_vmon5_ai	00110	10/256	30.7	HVP_CP	–
8	vsense_p20_ai	01000	56/256	5.48	MV5	–
9	vsense_p21_ai	01001	56/256	5.48	MV5	–
10	vsense_p22_ai	01010	56/256	5.48	MV5	–
11	vsense_p23_ai	01011	56/256	5.48	MV5	–
12	vsense_p26_ai	01100	56/256	5.48	MV5	–
13	vsense_p27_ai	01101	56/256	5.48	MV5	-

22.5 Central and PMU Regulator Temperature Sensor

This module is a quasi combination of a main on-chip temperature sensor and a PMU Regulator temperature sensor.

Modules Features

- 2 operation modes with
  Mode 1 - temperature range corresponds to differential output voltage range 0 …1.2V (output voltage shift enabled), resolution approximately 10°C.
  Mode 2 - temperature range corresponds to differential output voltage range 0.6 …1.2V, resolution approx. 15°C.
- The combined system temperature sensor plus ADC can be calibrated in software using calibration figures that are stored in the NVM at the production test.

This temperature sensor, including two sensing elements, monitors the chip temperature and PMU Regulator temperature. One sensing element is placed in the centre of the device to get the average device temperature status and the other sensing element is close to the PMU Regulator.

The voltage calculation of the Temperature is done with the following formula:

(15)

$$\mathrm{ADC2out} = \mathrm{floor}\left(\frac{Vtemp}{Vlsb} + 1\right)$$

The LSB Voltage is calculated:

(16)

$$\mathrm{Vlsb} = \frac{Vref}{256}$$

Vtemp is the direct proportional to temperature input voltage and is calculated by:

(17)

$$V_{\mathrm{tEMP}}(T) = \mathrm{a} + \mathrm{b} * (T - T_0)$$

where **the coefficient a** is **628 mV, b is 2,31 mV/K and T_0 is 273 K**:

The next chapter lists the available registers to configure both temperature sensors.

22.5.1 Temperature Sensor Control Register

The Temperature Sensor is fully controllable by the below listed SFR Register.

Table 367 Register Overview

Register Short Name	Register Long Name	Offset Address	Reset Value
Temperature Sensor Control Register,			
MF_TEMPSENSE_CTRL	Temperature Sensor Control Register	10_H	$0000\ 0003_H$

The registers are addressed bytewise.

Temperature Sensor Control Register

MF_TEMPSENSE_CTRL	Offset	Reset Value
Temperature Sensor Control Register	10_H	see Table 368

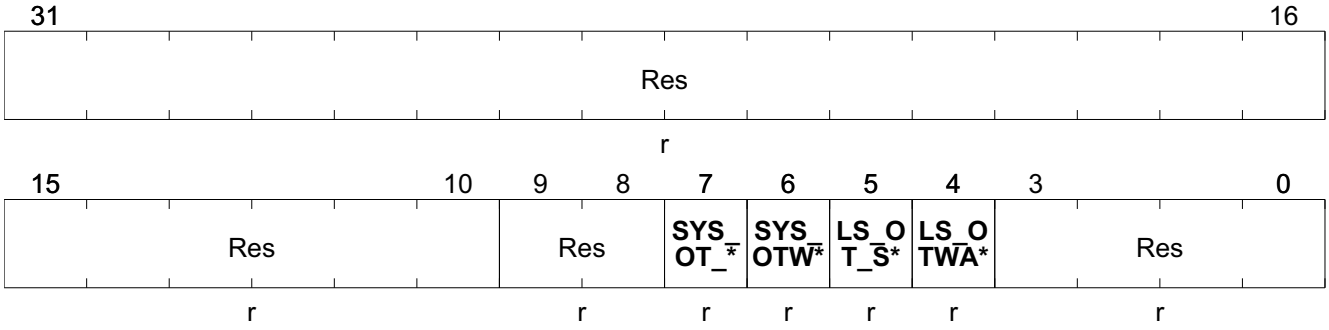

Field	Bits	Type	Description
Res	31:10	r	**Reserved** Always read as 0
Res	9:8	r	**Reserved** Always read as 0
SYS_OT_STS	7	r	**System Overtemperature (MU) Status** 0_B **INACTIVE** write clears status 1_B **ACTIVE** interrupt status set
SYS_OTWARN_STS	6	r	**System Overtemperature Warning (MU) Status** 0_B **INACTIVE** write clears status 1_B **ACTIVE** interrupt status set
LS_OT_STS	5	r	**Low Side Overtemperature (MU) Status** 0_B **INACTIVE** write clears status 1_B **ACTIVE** interrupt status set
LS_OTWARN_STS	4	r	**Low Side Overtemperature Warning (MU) Status** 0_B **INACTIVE** write clears status 1_B **ACTIVE** interrupt status set
Res	3:0	r	**Reserved** Always read as 0

Table 368 RESET of MF_TEMPSENSE_CTRL

Register Reset Type	Reset Values	Reset Short Name	Reset Mode	Note
RESET_TYPE_4	00000003_H	RESET_TYPE_4		

22.6 Supplement Modules

The purpose of the supplement modules is to enable a certain infrastructure on the device to guarantee a fail safe operation:

Module Features

- Bandgap Reference Voltage with accuracy ± 1.5%.
- Bandgap is monitored by an independent reference voltage.
- ADC1 Reference with accuracy ± 1%.
- ADC1 Reference has overload detection.

The next chapter lists the configuration possibilities of the on chip references.

22.6.1 Functional Safety Concept

8-bit ADC Module 2

- A known voltage, e.g. reference voltage of the main supply module, is periodically measured as part of the measurement sequence in normal operation. (The local ADC's reference voltage can, of course, not be used for this purpose since a local reference voltage error would not be detectable.)
- The conversion result of the functional safety measurement is evaluated in the postprocessing unit. If the results is not within the expected range an error is indicated.

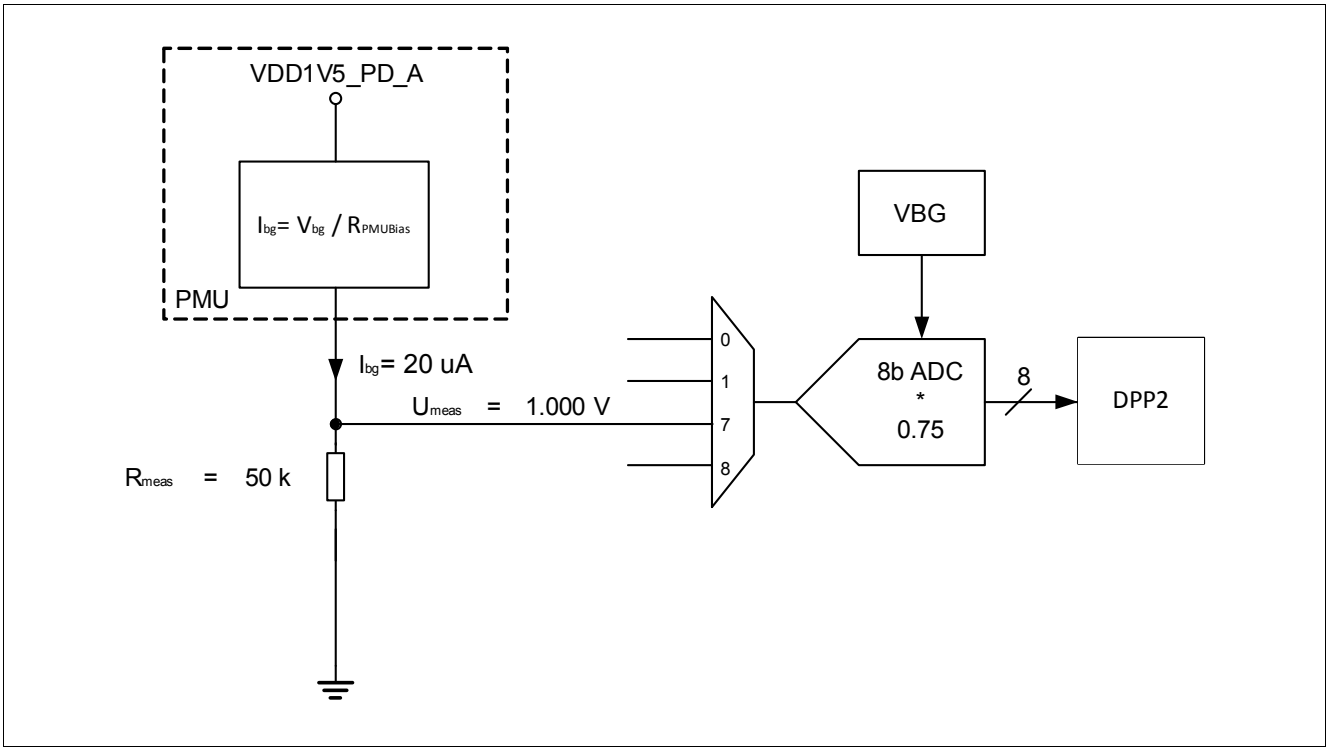

Figure 188 Principle of PMU Bandgap Measurement

22.6.2 Supplement Modules Control and Status Register

The next chapter lists the diagnosis and configuration possibilities of the supplement modules.

Table 369 Register Overview

Register Short Name	Register Long Name	Offset Address	Reset Value
Supplement Modules Control and Status Register,			
MF_REF1_STS	Reference 1 Status Register	14_H	0000 00C1$_H$

The registers are addressed bytewise.

Reference 1 Status Register

MF_REF1_STS	Offset	Reset Value
Reference 1 Status Register	14_H	see Table 370

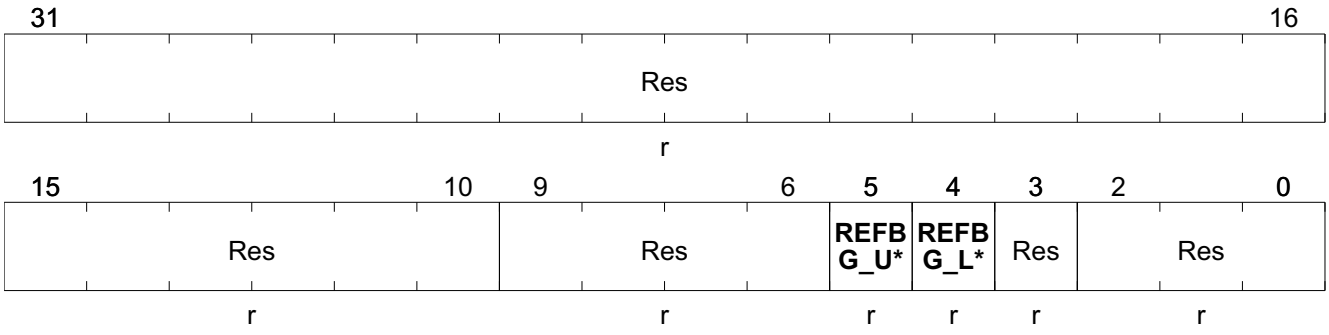

Field	Bits	Type	Description
Res	31:10	r	**Reserved** Always read as 0
Res	9:6	r	**Reserved** Always read as 1
REFBG_UPTHWARN_STS	5	r	**Status for Overvoltage Threshold Measurement of internal VAREF** 0_B **UPPER_TRIG_RESET** write clears status 1_B **UPPER_TRIG_SET** trigger status set
REFBG_LOTHWARN_STS	4	r	**Status for Undervoltage Threshold Measurement of internal VAREF** 0_B **UPPER_TRIG_RESET** write clears status 1_B **UPPER_TRIG_SET** trigger status set
Res	3	r	**Reserved** Always read as 0
Res	2:0	r	**Reserved** Always read as 0

Table 370 RESET of MF_REF1_STS

Register Reset Type	Reset Values	Reset Short Name	Reset Mode	Note
RESET_TYPE_3	$000000C1_H$	RESET_TYPE_3		

23 Measurement Core Module (incl. ADC2)

23.1 Features

- 7 individually programmable channels split into two groups of user configurable and non user configurable
- Individually programmable channel prioritization scheme for measurement unit
- Two independent filter stages with programmable low-pass and time filter characteristics for each channel
- Two channel configurations:
  – Programmable upper- and lower trigger thresholds comprising a fully programmable hysteresis
  – Two individually programmable trigger thresholds with limit hysteresis settings
- Individually programmable interrupts and status for all channel thresholds
- Operation down to reset threshold of entire system

23.2 Introduction

The basic function of this block is the digital postprocessing of several analog digitized measurement signals by means of filtering level comparison and interrupt generation. The measurement postprocessing block is built of seven identical channel units attached to the outputs of the 7-channel 8-bit ADC (ADC2). It processes seven channels, where the channel sequence and prioritization is programmable within a wide range.

23.2.1 Block Diagram

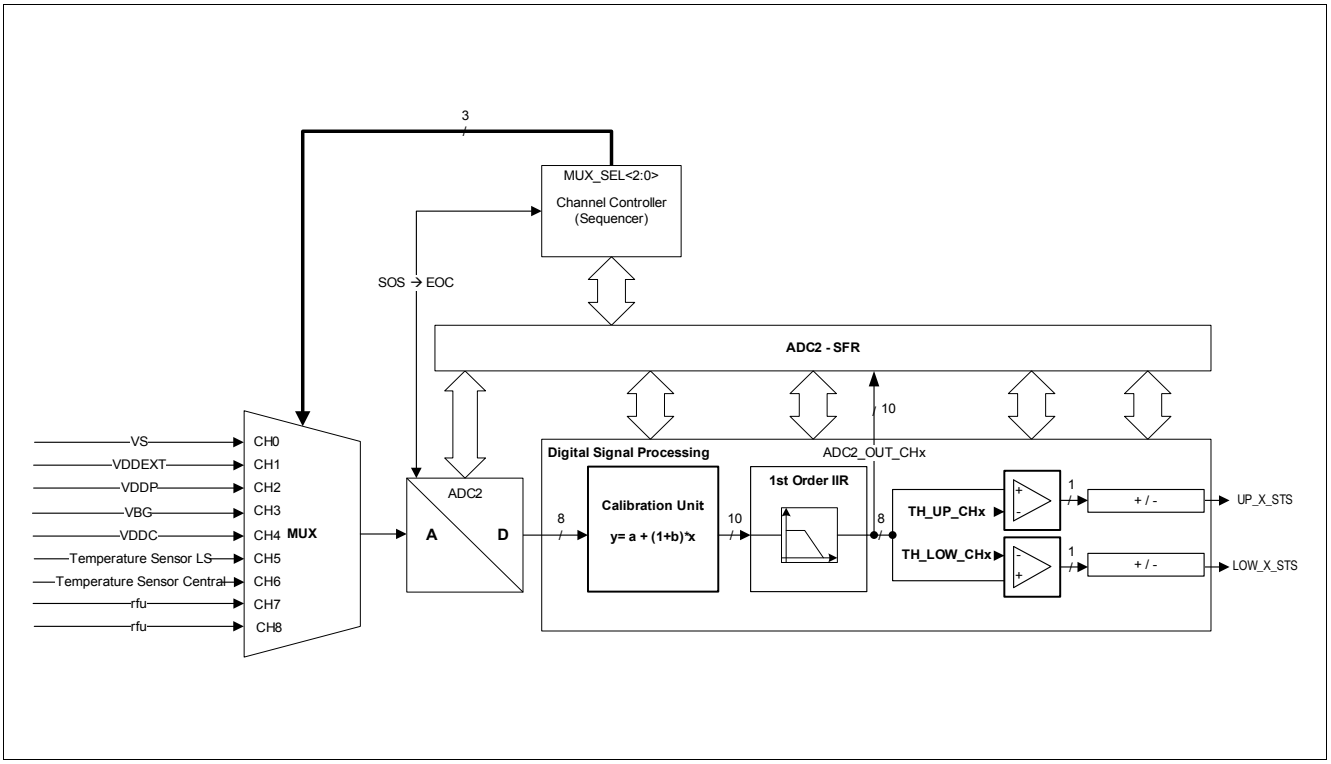

Figure 189 Module Block Diagram

23.2.2 Measurement Core Module Modes Overview

The basic function of this unit, is the digital signal processing of several analog digitized measurement signals by means of filtering, level comparison and interrupt generation. The Measurement Core module processes eight channels in a quasi parallel evaluation process.

As shown in the figure above, the ADC2 postprocessing consists of a channel controller (Sequencer), an 8-channel demultiplexer and the signal processing block, which filters and compares the sampled ADC2 values for each channel individually. The channel control block controls the multiplexer sequencing on the analog side before the ADC2 and on the digital domain after the ADC2. As described in the following section, the channel sequence can be controlled in a flexible way, which allows a certain degree of channel prioritization.

This capability can be used e.g. to set a higher priority to supply voltage channels compared to the other channel measurements. The Measurement Core Module offers additionally two different post-processing measurement modes for over-/undervoltage detection and for two-level threshold detection.

Usually the external register settings should only be changed during the start-up phase (**ADC2_CTRL2**).

“Software Mode”, Sequencer and Exceptional Interrupt Measurement is disabled, each measurement is triggered by software.

The threshold counter can be bypassed **ADC2_FILT_UP_CTRL** and **ADC2_FILT_LO_CTRL**

23.3 ADC2 - Core (8-bit ADC)

23.3.1 Functional Description

The different sequencer modes are controlled by SFR Register:

- “Normal Sequencer Mode” described in the Chapter **Channel Controller**.
- “Exceptional Interrupt Measurement” (EIM), upon hardware event, the channel programmed in **ADC2_CHx_EIM** is inserted after the current measurement is finished. Afterwards the current sequence will be continued with the next measurement from the current sequence.
- “Software Mode”, in Software Mode the control of the Channel Controller (Sequencer) is disabled, instead the conversions are fully controlled by software. During Software Mode EIM hardware events are ignored.

Software Mode:

- Software mode can be entered
  - by writing one of the sequence registers SQn (e.g. $SQ_{_1_4}$[7:0] zero) or
  - using Debug Suspend Mode
- In Software mode, the channel selection by the Sequencer is disabled. After the software mode is entered, the conversions are controlled via **ADC2_CTRL_STS**.
- The Software Mode is left
  - when the maximum time is reached (maximum time specified in **ADC2_MAX_TIME**) or
  - when the sequence which started the software mode is reprogrammed with at least one channel set is registers SQn (e.g. to $SQ_{_1_4}$[7:0] zero
  - leaving Debug Suspend Mode

Software Mode:

In Software Mode measurements are triggered by writing the **ADC2_CTRL_STS**.SOS bit. This bit is active as long as the conversion is in progress. The user polls the **ADC2_CTRL_STS**.EOC bit. Once this bit is ‘1’ the conversion is finished and the EOC bit is cleared on read (rh). After the EOC bit is cleared a new conversion can be started **ADC2_CTRL_STS**.SOS.

Debug Suspend Mode:

During Debug Suspend Mode the Sequencer is stopped once the current measurement is finished (after the next EOC event) and Software Mode is entered. As long as the Debug Suspend Mode is active no measurements are performed by the Sequencer. Once the Debug Suspend Mode is left, the Sequencer continues immediately with the next pending measurement.
Measurements can be still triggered in Debug Suspend Mode/Software Mode. The maximum time of Software Mode is disabled in Suspend Mode. EIM events are ignored during Debug Suspend Mode.

The ADC2 timing is controlled by SFR Register

- Sample time adjustment described in the register **ADC2_CTRL2**.

23.3.2 ADC2 Control Registers

The ADC2 is fully controllable by the below listed sfr Registers. The control must be enabled by setting all bits sequencer bits to zero. To enable the sequencer again this corresponding bits in the sequencer register must be set to one again.

Table 371 shows the module base addresses.

Table 371 Register Address Space

Module	Base Address	End Address	Note
ADC2	$4801C000_H$	$4801DFFF_H$	ADC2 - ADC-SAR8B

Table 372 Register Overview

Register Short Name	Register Long Name	Offset Address	Reset Value
ADC2 Control Registers,			
ADC2_CTRL_STS	ADC2 Control and Status Register	00_H	$0000\ 0001_H$
ADC2_STATUS	ADC2 HV Status Register	BC_H	$0000\ 0000_H$

The registers are addressed wordwise.

ADC2 Control Register

ADC2_CTRL_STS	Offset	Reset Value
ADC2 Control and Status Register	00_H	see Table 373

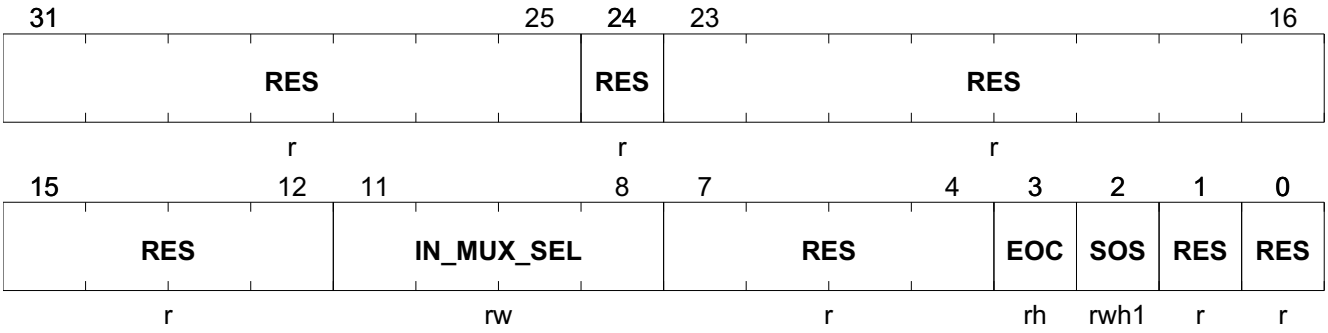

Field	Bits	Type	Description
RES	31:25	r	**Reserved** Always read as 0
RES	24	r	**Reserved** Always read as 0
RES	23:12	r	**Reserved** Always read as 0
IN_MUX_SEL	11:8	rw	**Channel for software mode** Other bit combinations are **reserved**, do not use. 0000_B **CH0_EN** Channel 0 enable 0001_B **CH1_EN** Channel 1 enable 0010_B **CH2_EN** Channel 2 enable 0011_B **CH3_EN** Channel 3 enable 0100_B **CH4_EN** Channel 4 enable 0101_B **CH5_EN** Channel 5 enable 0110_B **CH6_EN** Channel 6 enable 0111_B **rfu** reserved for future use $1xxx_B$ **rfu** reserved for future use
RES	7:4	r	**Reserved** Always read as 0
EOC	3	rh	**ADC2 End of Conversion (software mode)** 0_B **Pending** conversion still running 1_B **Finished** conversion has finished
SOS	2	rwh1	**ADC2 Start of Sampling/Conversion (software mode)** *Note: Bit is set by software to start sampling and conversion and it is cleared by hardware once the conversion is finished ADC2_SOC can be only written if the DPP is in software mode.* 0_B **Disable** no conversion is started 1_B **Enable** conversion is started

Field	Bits	Type	Description
RES	1	r	**Reserved** Always read as 0
RES	0	r	**Reserved** Always read as 0

Table 373 RESET of ADC2_CTRL_STS

Register Reset Type	Reset Values	Reset Short Name	Reset Mode	Note
RESET_TYPE_3	00000001_H	RESET_TYPE_3		

ADC2 HV Control Register

ADC2_STATUS	Offset	Reset Value
ADC2 HV Status Register	BC_H	see Table 374

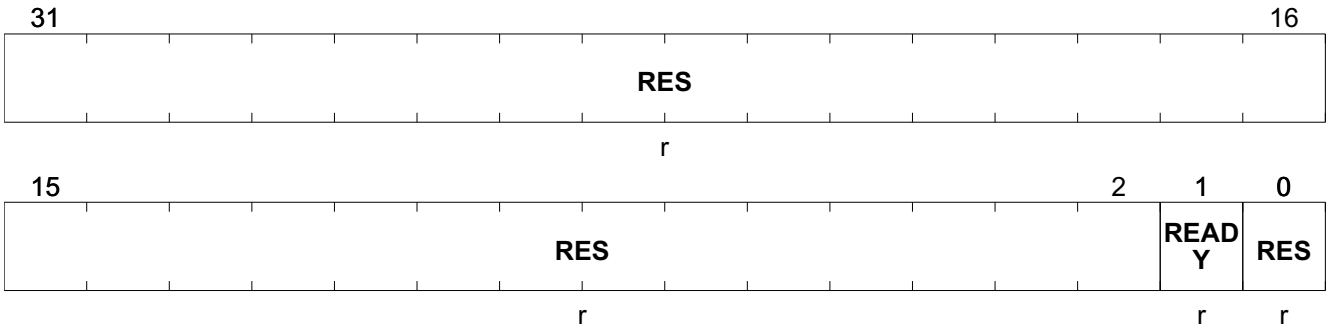

Field	Bits	Type	Description
RES	31:2	r	**Reserved** Always read as 0
READY	1	r	**HVADC Ready bit** 0_B **Not ready** Module in power down or in init phase 1_B **Ready** set automatically 5 ADC clock cycles after module is enabled
RES	0	r	**Reserved** Always read as 0

Table 374 RESET of ADC2_STATUS

Register Reset Type	Reset Values	Reset Short Name	Reset Mode	Note
RESET_TYPE_3	00000000_H	RESET_TYPE_3		

23.4 Channel Controller

23.4.1 Functional Description

The task of each channel controller is a prioritization of the individual measurement channels. The sequencing scheme is illustrated in the example of following table and can be programmed individually for measurement unit.

Table 375 Measurement channel sequence definition example (used as default sequence)

Measurement channel n	CH6	CH5	CH4	CH3	CH2	CH1	LSB CH0
Registers {SQ_1_4[6:0]}	0	1	1	0	1	1	1
Registers {SQ_1_4[14:8]}	1	0	0	1	0	0	0
Registers {SQ_1_4[22:16]}	0	1	1	0	1	1	0
Registers {SQ_1_4[30:24]}	1	0	0	1	0	0	1
Registers {SQ_5_8[6:0]}	0	1	1	0	1	1	0
Registers {SQ_5_8[14:8]}	1	0	0	1	0	0	0
Registers {SQ_5_8[22:16]}	0	1	1	0	1	1	1

The sequence registers SQ_n and define the time sequence of the measurement channels by the following rules:

- The sequence registers define the measurement sequence and are evaluated from sequence 1 to 7 and for each register from MSB to LSB, which defines a max. overall measurement periodicity of 49 sampling and conversion cycles.
- If the individual bit in the sequence register is set to ’1’, the corresponding channel is measured.
- If the individual bit in the sequence register is not set, this measurement phase is skipped.

In the upper example, the resulting channel sequence is defined as:

CH5, CH4, CH2, CH1, CH0, CH6, CH3, CH5, CH4, CH2, CH1,....., CH5, CH4, CH2, CH1, CH0.

In TLE98xx Channels 0 - 6 can not be programmed by the user. All Sequence registers, especially for high priority channels are protected to ensure a fast update of measurement results used for internal system diagnosis. The overall periodicity is mainly determined by this two channels. The channels 0-6 are measured depending on the amount of ’1’ bits, written in the sequence registers. The following equations can be used to calculate the periodicity of the required channel measurement.

The overall measurement periodicity of all measurements in A/D conversion cycles is defined as:

$$\overline{\text{Nmeas}} = \sum_{m=1}^{7} \left(\sum_{n=0}^{6} SQ_m[n] \right) \tag{18}$$

The average measurement periodicity of channel n in A/D conversion cycles is defined as

$$\overline{N_{meas_n}} = \frac{\left(\sum_{m=1}^{7} SQ_m[n]\right)}{\overline{T_{meas}}} \quad (19)$$

The timing of the analog MUX and the digital DEMUX is controlled by the channel controller accordingly. The analog MUX with sample and hold stage needs one clock cycle for channel switching and the ADC consumes, as default setting, 12 clock cycles for the sampling of the input voltage. The conversion time for a single channel measurement value is 10 clock cycles.

As already mentioned above, the channel controller has a fixed sequence register setting which cannot be changed by the user. The fixed register setting is needed, to fulfill the sampling frequency requirements of the internal circuits, e.g. shutdown in case of overtemperature for the low sides and protection overtemperature protection of the system.

The minimum measurement periodicity, which can be achieved, by enabling only channel 1 in the sequence registers, depends on the MI_CLK frequency and is given by:

$$\overline{T_{meas_Chl_min}} = \frac{32}{f_{MI_CLK}}$$

This following calculations include already the sampling time of ADC2. If all programmable channels are enabled, the maximum periodicity is calculated: (20)

$$\overline{T_{meas_Chl_max}} = \frac{320}{f_{MI_CLK}} \quad (21)$$

For a MI_CLK frequency of 24 MHz, the channel 1 is measured with min. 4 µs. The maximum update time of channel 1 with 24 MHz clock frequency is 10 µs. As mentioned before, this is calculated with the assumption, that all channels are enabled and channel1 is enabled in every sequence register. As a prerequisite for this calculation we take **ADC2_CTRL2** = 4 (sample period = 14 MI_CLK clock cycles).

23.4.2 Channel Controller Control Registers

The Channel Controller can be configured by the **SFR** Register listed in Table 376. The registers which cannot be written by the user have the attribute **rwpt**.

Table 376 Register Overview

Register Short Name	Register Long Name	Offset Address	Reset Value
Channel Controller Control Registers,			
ADC2_SQ_FB	Sequencer Feedback Register	04_H	0000 0000 000X XXXX 0XXX XXXX 0000 XXXX_B
ADC2_CHx_EIM	Channel Settings Bits for Exceptional Interrupt Measurement	08_H	0000 0000_H
ADC2_MAX_TIME	Maximum Time for Software Mode	10_H	0000 0000_H
ADC2_CTRL1	Measurement Unit Control Register 1	14_H	0000 0000_H
ADC2_CTRL2	Measurement Unit Control Register 2	18_H	0000 0401_H
ADC2_CTRL4	Measurement Unit Control Register 4	$1C_H$	0000 $007F_H$
ADC2_SQ1_4	Measurement Channel Enable Bits for Cycle 1-4	20_H	4936 4837_H
ADC2_SQ5_8	Measurement Channel Enable Bits for Cycle 5 - 8	24_H	0037 4836_H

The registers are addressed wordwise.

Measurement Unit Control Register 1

This register is dedicated for controlling the calibration unit of the measurement core module. The respective channel calibration can be enabled or disabled by the bits listed below.

ADC2_CTRL1	Offset	Reset Value
Measurement Unit Control Register 1	**14_H**	**see Table 377**

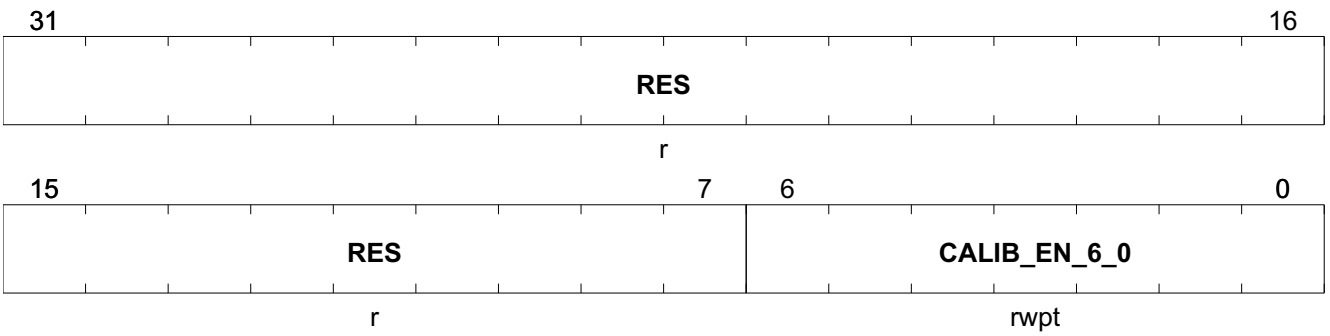

Field	Bits	Type	Description
RES	31:7	r	**Reserved** Always read as 0
CALIB_EN_6_0	6:0	rwpt	**Calibration Enable for Channels 6 to 0** The following values can be ored: $000\ 0001_B$**CH0_EN** Channel 0 calibration enable $000\ 0010_B$**CH1_EN** Channel 1 calibration enable $000\ 0100_B$**CH2_EN** Channel 2 calibration enable $000\ 1000_B$**CH3_EN** Channel 3 calibration enable $001\ 0000_B$**CH4_EN** Channel 4 calibration enable $010\ 0000_B$**CH5_EN** Channel 5 calibration enable $100\ 0000_B$**CH6_EN** Channel 6 calibration enable

Table 377 RESET of ADC2_CTRL1

Register Reset Type	Reset Values	Reset Short Name	Reset Mode	Note
RESET_TYPE_4	00000000_H	RESET_TYPE_4		

Measurement Unit Control Register 2

This register is used for controlling the calibration unit of channels 0-7 of the measurement core module. This registers are protected for the purpose mentioned at the beginning of this chapter. Furthermore this register contains the sample time adjustment for ADC2. The default value is 14 clock cycles. Values above 14 clock cycles are not recommended, because they increase the overall response time of the measurement system.

ADC2_CTRL2	Offset	Reset Value
Measurement Unit Control Register 2	18_H	see Table 378

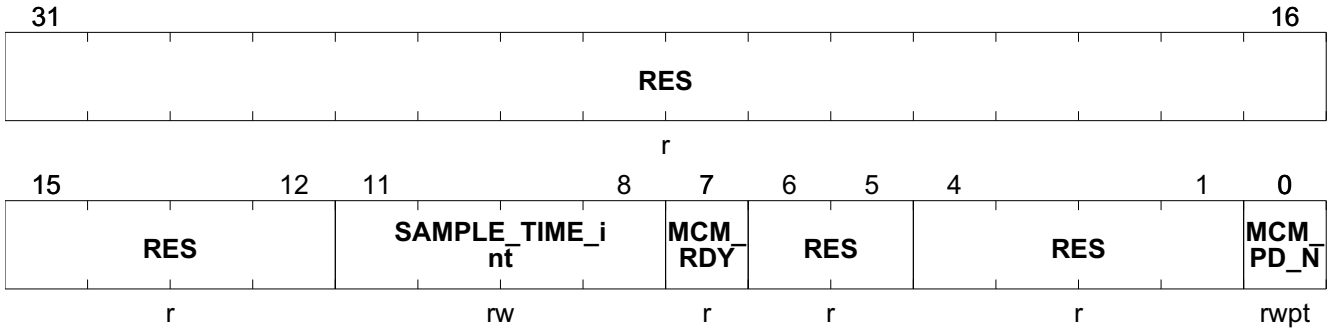

Field	Bits	Type	Description
RES	31:16	r	**Reserved** Always read as 0
RES	15:12	r	**Reserved** Always read as 0

Field	Bits	Type	Description
SAMPLE_TIME_int	11:8	rw	**Sample time of ADC2** 0_H **MICLK4** 4 MI_CLK clock periods 1_H **MICLK6** 6 MI_CLK clock periods 2_H **MICLK8** 8 MI_CLK clock periods 3_H **MICLK10** 10 MI_CLK clock periods 4_H **MICLK12** 12 MI_CLK clock periods (default) 5_H **MICLK14** 14 MI_CLK clock periods 6_H **MICLK16** 16 MI_CLK clock periods 7_H **MICLK18** 18 MI_CLK clock periods 8_H **MICLK20** 20 MI_CLK clock periods 9_H **MICLK22** 22 MI_CLK clock periods A_H **n.u.** not used B_H **n.u.** not used C_H **n.u.** not used D_H **n.u.** not used E_H **n.u.** not used F_H **n.u.** not used
MCM_RDY	7	r	**Ready Signal for MCM[1] after Power On or Reset** 0_B **MCM Not Ready** Measurement Core Module in startup phase 1_B **MCM Ready** Measurement Core Module start-up phase finished
RES	6:5	r	**Reserved** Always read as 0
RES	4:1	r	**Reserved** Always read as 0
MCM_PD_N	0	rwpt	**Power Down Signal for MCM** 0_B **MCM Disabled** Measurement Core Module disabled 1_B **MCM Enabled** Measurement Core Module enabled

1) MCM = Measurement Core Module

Table 378 RESET of ADC2_CTRL2

Register Reset Type	Reset Values	Reset Short Name	Reset Mode	Note
RESET_TYPE_4	00000401_H	RESET_TYPE_4		

Measurement Unit Control Register 4

ADC2_CTRL4	Offset	Reset Value
Measurement Unit Control Register 4	$1C_H$	see Table 379

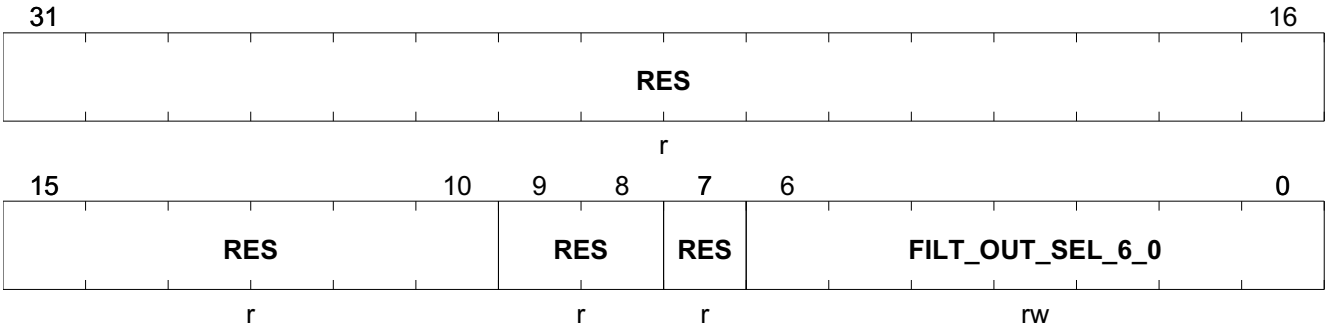

Field	Bits	Type	Description
RES	31:10	r	**Reserved** Always read as 0
RES	9:8	r	**Reserved** Always read as 0
RES	7	r	**Reserved** Always read as 0
FILT_OUT_SEL_6_0	6:0	rw	**Output Filter Selection for Channels 0 to 5** 000 0000_B **ADC2 Unfiltered Data can be monitored in the corresponding ADC2_FILT_OUTx Registers** . 000 0001_B **Channel 0 IIR Data enabled for ADC2_FILT_OUT0 Register** . 000 0010_B **Channel 1 IIR Data enabled for ADC2_FILT_OUT1 Register** . 000 0100_B **Channel 2 IIR Data enabled for ADC2_FILT_OUT2 Register** . 000 1000_B **Channel 3 IIR Data enabled for ADC2_FILT_OUT3 Register** . 001 0000_B **Channel 4 IIR Data enabled for ADC2_FILT_OUT4 Register** . 010 0000_B **Channel 5 IIR Data enabled for ADC2_FILT_OUT5 Register** . 100 0000_B **Channel 6 IIR Data enabled for ADC2_FILT_OUT6 Register** . 111 1111_B **For Channels 7-0 IIR Data is enabled for ADC2_FILT_OUTx Registers** .

Table 379 RESET of ADC2_CTRL4

Register Reset Type	Reset Values	Reset Short Name	Reset Mode	Note
RESET_TYPE_4	$0000007F_H$	RESET_TYPE_4		

Measurement Channel Enable Bits for Cycle 1 - 4

ADC2_SQ1_4	Offset	Reset Value
Measurement Channel Enable Bits for Cycle 1-4	20_H	see Table 380

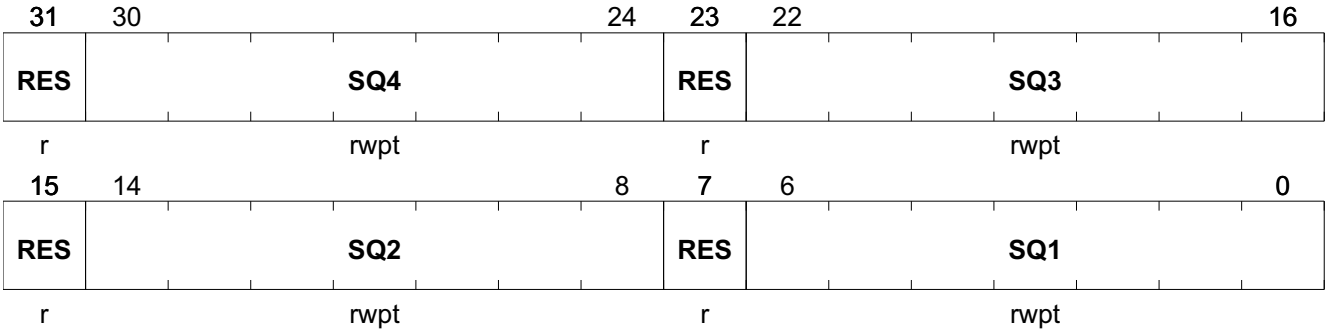

Field	Bits	Type	Description
RES	31	r	**Reserved** Always read as 0
SQ4	30:24	rwpt	**Sequence 4 channel enable** The following values can be ored: $000\ 0001_B$**CH0_EN** Channel 0 enable $000\ 0010_B$**CH1_EN** Channel 1 enable $000\ 0100_B$**CH2_EN** Channel 2 enable $000\ 1000_B$**CH3_EN** Channel 3 enable $001\ 0000_B$**CH4_EN** Channel 4 enable $010\ 0000_B$**CH5_EN** Channel 5 enable $100\ 0000_B$**CH6_EN** Channel 6 enable
RES	23	r	**Reserved** Always read as 0
SQ3	22:16	rwpt	**Sequence 3 channel enable** The following values can be ored: $000\ 0001_B$**CH0_EN** Channel 0 enable $000\ 0010_B$**CH1_EN** Channel 1 enable $000\ 0100_B$**CH2_EN** Channel 2 enable $000\ 1000_B$**CH3_EN** Channel 3 enable $001\ 0000_B$**CH4_EN** Channel 4 enable $010\ 0000_B$**CH5_EN** Channel 5 enable $100\ 0000_B$**CH6_EN** Channel 6 enable
RES	15	r	**Reserved** Always read as 0
SQ2	14:8	rwpt	**Sequence 2 channel enable** The following values can be ored: $000\ 0001_B$**CH0_EN** Channel 0 enable $000\ 0010_B$**CH1_EN** Channel 1 enable $000\ 0100_B$**CH2_EN** Channel 2 enable $000\ 1000_B$**CH3_EN** Channel 3 enable $001\ 0000_B$**CH4_EN** Channel 4 enable $010\ 0000_B$**CH5_EN** Channel 5 enable $100\ 0000_B$**CH6_EN** Channel 6 enable
RES	7	r	**Reserved** Always read as 0

Field	Bits	Type	Description
SQ1	6:0	rwpt	**Sequence 1 channel enable** The following values can be ored: $000\ 0001_B$**CH0_EN** Channel 0 enable $000\ 0010_B$**CH1_EN** Channel 1 enable $000\ 0100_B$**CH2_EN** Channel 2 enable $000\ 1000_B$**CH3_EN** Channel 3 enable $001\ 0000_B$**CH4_EN** Channel 4 enable $010\ 0000_B$**CH5_EN** Channel 5 enable $100\ 0000_B$**CH6_EN** Channel 6 enable

Table 380 RESET of ADC2_SQ1_4

Register Reset Type	Reset Values	Reset Short Name	Reset Mode	Note
RESET_TYPE_4	49364837_H	RESET_TYPE_4		

Measurement Channel Enable Bits for Cycle 5 - 8

ADC2_SQ5_8	Offset	Reset Value
Measurement Channel Enable Bits for Cycle 5 - 8	24_H	see Table 381

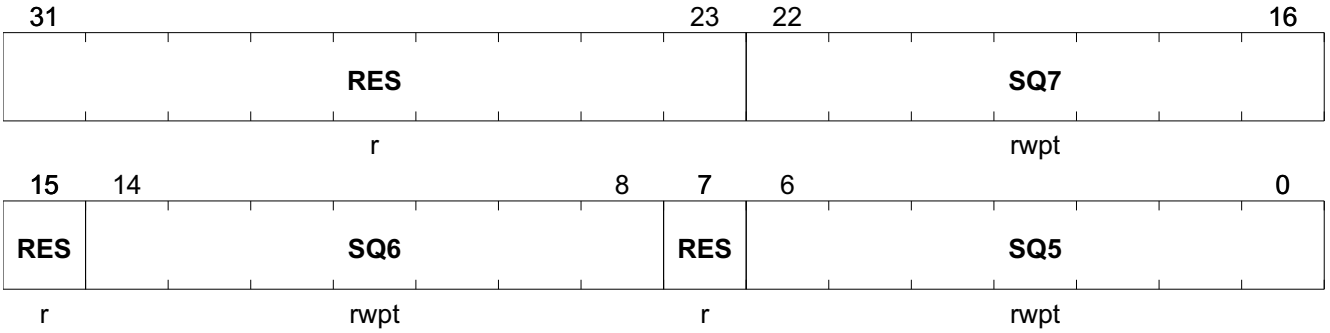

Field	Bits	Type	Description
RES	31:23	r	**Reserved** Always read as 0
SQ7	22:16	rwpt	**Sequence 7 channel enable** The following values can be ored: $000\ 0001_B$**CH0_EN** Channel 0 enable $000\ 0010_B$**CH1_EN** Channel 1 enable $000\ 0100_B$**CH2_EN** Channel 2 enable $000\ 1000_B$**CH3_EN** Channel 3 enable $001\ 0000_B$**CH4_EN** Channel 4 enable $010\ 0000_B$**CH5_EN** Channel 5 enable $100\ 0000_B$**CH6_EN** Channel 6 enable
RES	15	r	**Reserved** Always read as 0
SQ6	14:8	rwpt	**Sequence 6 channel enable** The following values can be ored: $000\ 0001_B$**CH0_EN** Channel 0 enable $000\ 0010_B$**CH1_EN** Channel 1 enable $000\ 0100_B$**CH2_EN** Channel 2 enable $000\ 1000_B$**CH3_EN** Channel 3 enable $001\ 0000_B$**CH4_EN** Channel 4 enable $010\ 0000_B$**CH5_EN** Channel 5 enable $100\ 0000_B$**CH6_EN** Channel 6 enable
RES	7	r	**Reserved** Always read as 0

Field	Bits	Type	Description
SQ5	6:0	rwpt	**Sequence 5 channel enable** The following values can be ored: $000\ 0001_B$**CH0_EN** Channel 0 enable $000\ 0010_B$**CH1_EN** Channel 1 enable $000\ 0100_B$**CH2_EN** Channel 2 enable $000\ 1000_B$**CH3_EN** Channel 3 enable $001\ 0000_B$**CH4_EN** Channel 4 enable $010\ 0000_B$**CH5_EN** Channel 5 enable $100\ 0000_B$**CH6_EN** Channel 6 enable

Table 381 RESET of ADC2_SQ5_8

Register Reset Type	Reset Values	Reset Short Name	Reset Mode	Note
RESET_TYPE_4	00374836_H	RESET_TYPE_4		

Sequencer Feedback Register

ADC2_SQ_FB	Offset	Reset Value
Sequencer Feedback Register	04_H	see Table 382

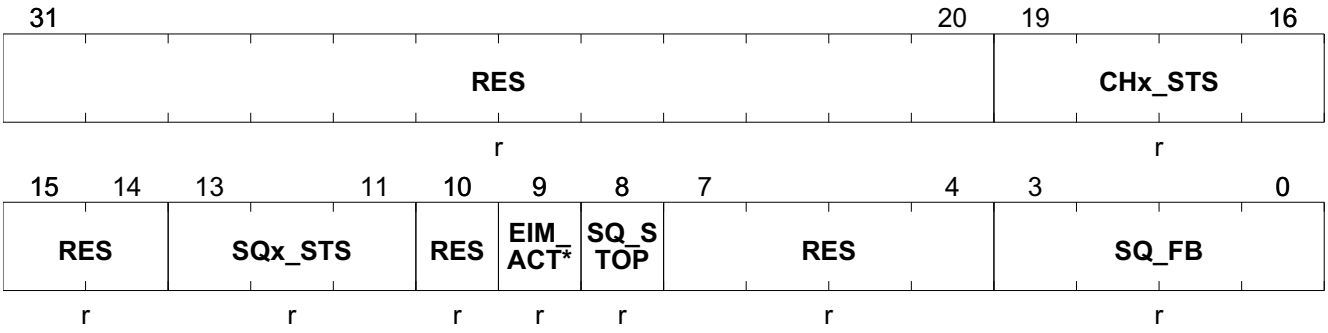

Field	Bits	Type	Description
RES	31:20	r	**Reserved** Always read as 0
CHx_STS	19:16	r	**Current ADC2 Channel** Other bit combinations are **reserved**, do not use. 0000_B **CH0** Channel 0 enable 0001_B **CH1** Channel 1 enable 0010_B **CH2** Channel 2 enable 0011_B **CH3** Channel 3 enable 0100_B **CH4** Channel 4 enable 0101_B **CH5** Channel 5 enable 0110_B **CH6** Channel 6 enable 0111_B **CH7** Channel 7 enable 1000_B **CH8** Channel 8 enable
RES	15:14	r	**Reserved** Always read as 0
SQx_STS	13:11	r	**Current Active ADC2 Sequence** Other bit combinations are **reserved**, do not use. 000_B **SQ1** Sequence 1 enable 001_B **SQ2** Sequence 2 enable 010_B **SQ3** Sequence 3 enable 011_B **SQ4** Sequence 4 enable 100_B **SQ5** Sequence 5 enable 101_B **SQ6** Sequence 6 enable 110_B **SQ7** Sequence 7 enable
RES	10	r	**Reserved** Always read as 0
EIM_ACTIVE	9	r	**ADC2 EIM active** 0_B **not active** EIM not active 1_B **active** EIM active

Field	Bits	Type	Description
SQ_STOP	8	r	**ADC2 Sequencer Stop Signal for DPP** 0_B **DPP Running** Postprocessing Sequencer in running mode 1_B **DPP Stopped** Postprocessing Sequencer stopped / Software Mode entered
RES	7:4	r	**Reserved** Always read as 0
SQ_FB	3:0	r	**Current Sequence that caused software mode** Other bit combinations are **n.u.**, not used. 0000_B **SQ1** Sequence 1 0001_B **SQ2** Sequence 2 0010_B **SQ3** Sequence 3 0011_B **SQ4** Sequence 4 0100_B **SQ5** Sequence 5 0101_B **SQ6** Sequence 6 0110_B **SQ7** Sequence 7 0111_B **SQ8** Sequence 8 1000_B **SQ9** Sequence 9 1001_B **SQ10** Sequence 10 1010_B **RES** reserved 1011_B **CH_MASK** Channel Mask = 0 1100_B **SUSPEND** Debug Suspend Mode

Table 382 RESET of ADC2_SQ_FB

Register Reset Type	Reset Values	Reset Short Name	Reset Mode	Note
RESET_TYPE_3	$00XXXX0X_H$	RESET_TYPE_3		Exact Reset Values: 0000 0000 000X XXXX 0XXX XXXX 0000 XXXX(B)

Channel Setting for Exceptional Interrupt Measurement

ADC2_CHx_EIM	Offset	Reset Value
Channel Settings Bits for Exceptional Interrupt Measurement	08_H	see Table 383

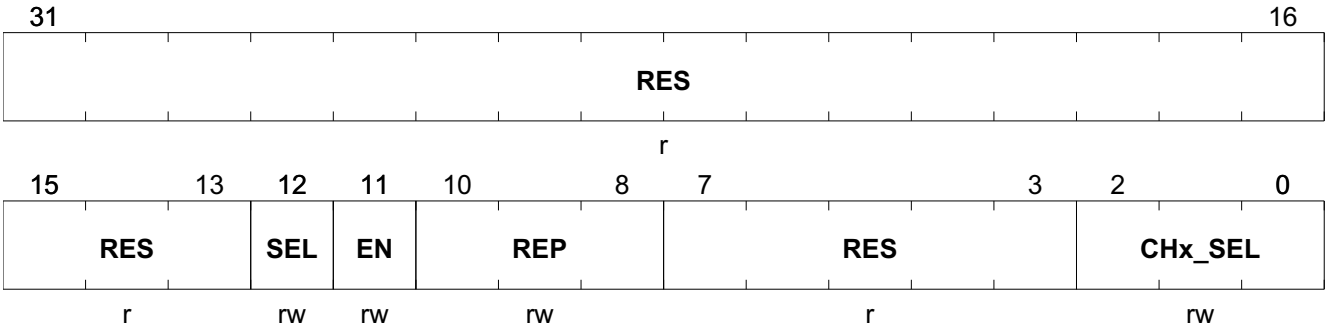

Field	Bits	Type	Description
RES	31:13	r	**Reserved** Always read as 0
SEL	12	rw	**Exceptional interrupt measurement (EIM) Trigger select** Always read as 0 0_B **GPT12PISEL.T3_GPT12_SEL** GPT12_PISEL triggers EIM 1_B **not supported**
EN	11	rw	**Exceptional interrupt measurement (EIM) Trigger Event enable** Always read as 0 0_B **DISABLE** start of EIM disabled 1_B **ENABLE** start of IEM enabled
REP	10:8	rw	**Repeat count for exceptional interrupt measurement (EIM)** 000_B **1** Measurements 001_B **2** Measurements 010_B **4** Measurements 011_B **8** Measurements 100_B **16** Measurements 101_B **32** Measurements 110_B **64** Measurements 111_B **128** Measurements
RES	7:3	r	**Reserved** Always read as 0

Field	Bits	Type	Description
CHx_SEL	2:0	rw	**Channel set for exceptional interrupt measurement (EIM)** Other bit combinations are **n.u.**, not used. 000_B **CH0_EN** Channel 0 enable 001_B **CH1_EN** Channel 1 enable 010_B **CH2_EN** Channel 2 enable 011_B **CH3_EN** Channel 3 enable 100_B **CH4_EN** Channel 4 enable 101_B **CH5_EN** Channel 5 enable 110_B **CH6_EN** Channel 6 enable 111_B **rfu** reserved for future use

Table 383 RESET of ADC2_CHx_EIM

Register Reset Type	Reset Values	Reset Short Name	Reset Mode	Note
RESET_TYPE_3	00000000_H	RESET_TYPE_3		

Maximum Time for Software Mode

ADC2_MAX_TIME	Offset	Reset Value
Maximum Time for Software Mode	10_H	see Table 384

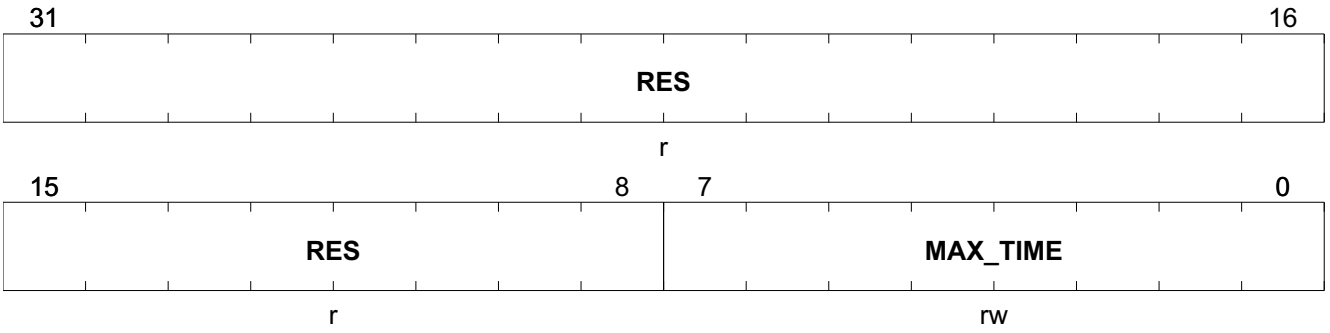

Field	Bits	Type	Description
RES	31:8	r	**Reserved** Always read as 0
MAX_TIME	7:0	rw	**Maximum Time in Software Mode** Maximum time in Software Mode with the unit of 50 ns. Software mode is active for ADC2_MAX_TIME * 50 ns 00_H **min** Software mode is immediately left FF_H **max** Software mode is active for 12.75 us

Table 384 RESET of ADC2_MAX_TIME

Register Reset Type	Reset Values	Reset Short Name	Reset Mode	Note
RESET_TYPE_3	00000000_H	RESET_TYPE_3		

23.5 Calibration Unit

23.5.1 Functional Description

The calibration unit of the Measurement Core module is dedicated to cancel offset and gain errors out of the signal chain. The upcoming two chapter describe usage and setup of the calibration unit.

23.5.1.1 Method for determining the Calibration Parameters

As mentioned in the introduction of the calibration unit, the module can be used to correct gain and offset errors caused by non-idealities in the measurement chain. This non-idealities are caused by the corresponding measurement chain modules.

Those first order non-idealities are:

- Offset and Gain Error of ADC2.
- Offset and Gain Error of the Attenuator (especially voltage measurement).
- Offset and Gain Error of Reference Voltage.

All these factors are summed up in the overall Gain (factor **b**) and overall Offset (adder **a**) of the complete measurement chain. They are calculated from a two point test result and stored inside the NVM.

23.5.1.2 Setup of Calibration Unit

Each channel has its own calibration unit and thus also its dedicated Gain and Offset parameter. These parameters are stored in a 100TP page of the Flash Module. After each reset of RESET_TYPE_4 these coefficients are downloaded from NVM into the corresponding registers. The user may not take care about the configuration of these parameters. After this has been done, the values are used for the correction procedure. The figure below shows the formula performed by the calibration unit and the required **sfr**-Register to control its functionality in a generic way.

The parameters ADC2_CALOFFS_CHx and ADC2_CALGAIN_CHx are stored in a 8 bit, 2th complement format.

The function applied to calculate the calibrated ADC2 value is

ADC_cal_CHx = (1 + <ADC2_CALGAIN_CHx>/256) * ADC_uncal_CHx + <ADC2_CALOFFS_CHx>/2

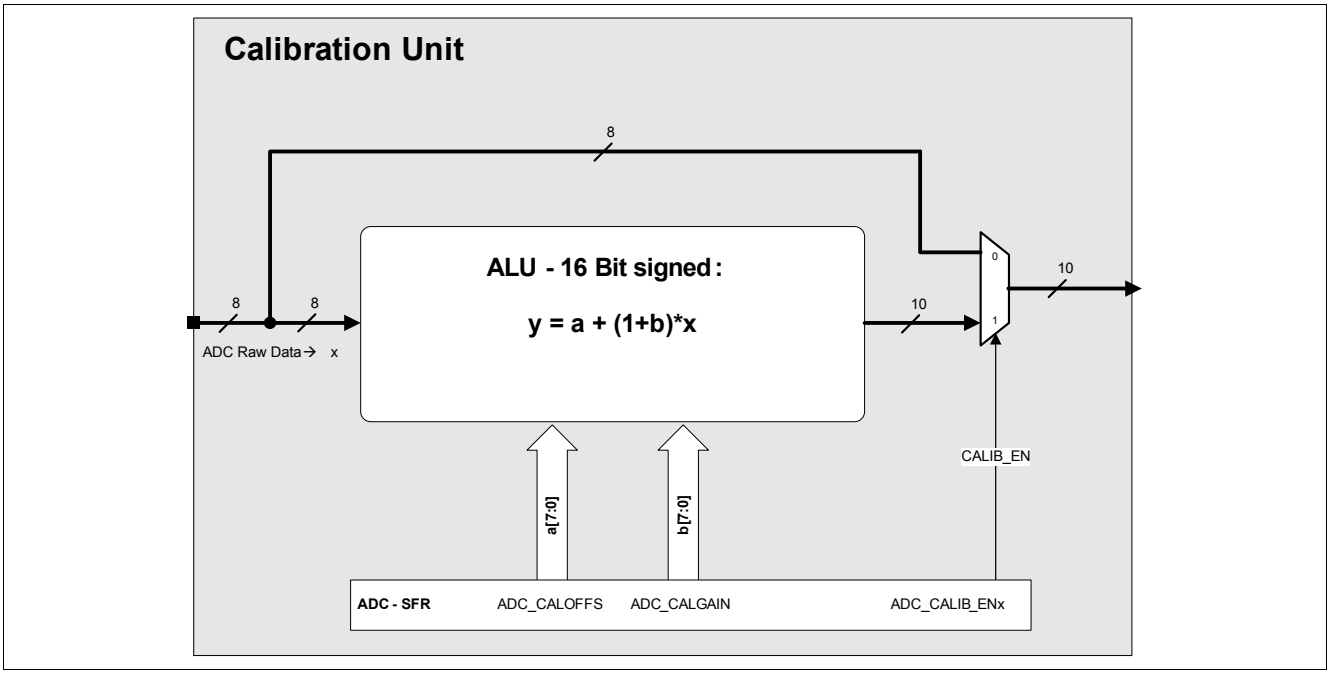

Figure 190 Structure of Calibration Unit

23.5.2 Calibration Unit Control Registers

The Calibration Unit can be configured by the **SFR** Register shown below. The registers which cannot be written by the user have the attribute **rwp**. This register is:

ADC2_CAL_CH6_7

Table 385 Register Overview

Register Short Name	Register Long Name	Offset Address	Reset Value
Calibration Unit Control Registers,			
ADC2_CAL_CH0_1	Calibration for Channel 0 & 1	34_H	0000 0000_H
ADC2_CAL_CH2_3	Calibration for Channel 2 & 3	38_H	0000 0000_H
ADC2_CAL_CH4_5	Calibration for Channel 4 & 5	$3C_H$	0000 0000_H
ADC2_CAL_CH6_7	Calibration for Channel 6 & 7	40_H	0000 0000_H

The registers are addressed wordwise.

ADC2 Calibration Value Channel 0 & 1

ADC2_CAL_CH0_1	Offset	Reset Value
Calibration for Channel 0 & 1	34_H	see Table 386

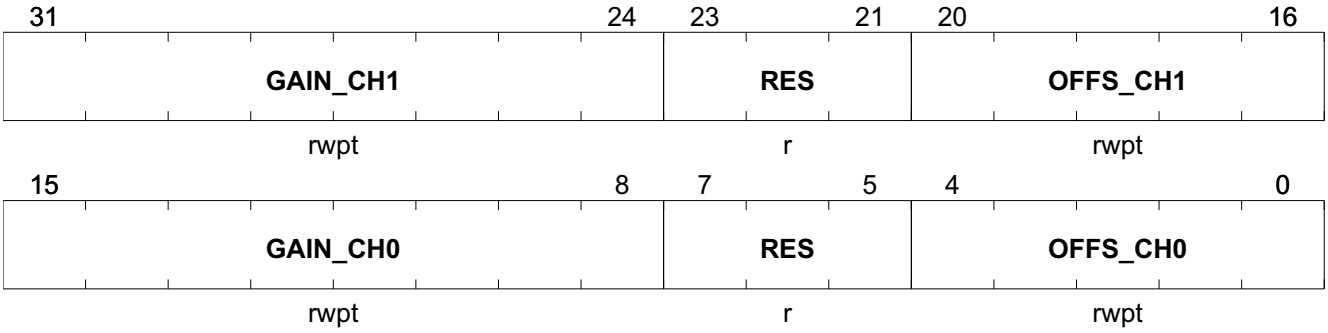

Field	Bits	Type	Description
GAIN_CH1	31:24	rwpt	**Gain Calibration for channel 1** For ADC output set CALIB_EN_1 = 0
RES	23:21	r	**Reserved** Always read as 0
OFFS_CH1	20:16	rwpt	**Offset Calibration for channel 1** For ADC output set CALIB_EN_1 = 0
GAIN_CH0	15:8	rwpt	**Gain Calibration for channel 0** For ADC output set CALIB_EN_0 = 0
RES	7:5	r	**Reserved** Always read as 0

Field	Bits	Type	Description
OFFS_CH0	4:0	rwpt	**Offset Calibration for channel 0** For ADC output set CALIB_EN_0 = 0

Table 386 RESET of ADC2_CAL_CH0_1

Register Reset Type	Reset Values	Reset Short Name	Reset Mode	Note
RESET_TYPE_4	00000000_H	RESET_TYPE_4		

ADC2 Calibration Value Channel 2 & 3

ADC2_CAL_CH2_3 **Offset** **Reset Value**

Calibration for Channel 2 & 3 **38_H** **see Table 387**

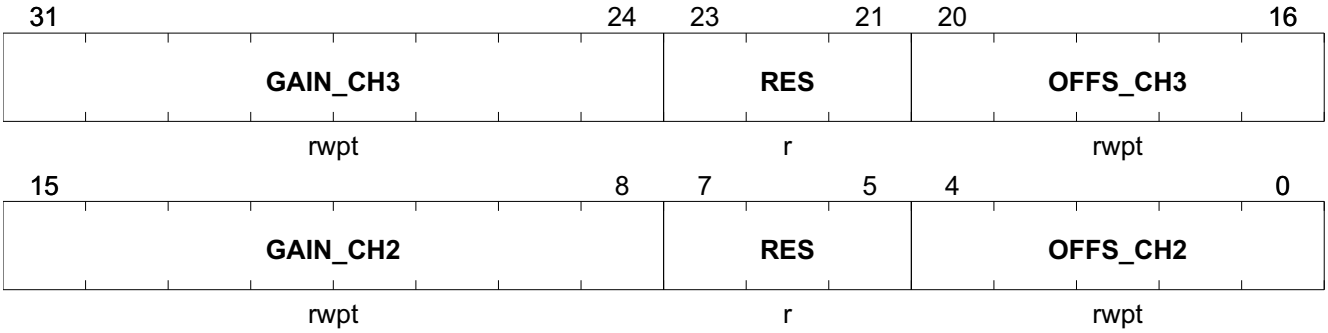

Field	Bits	Type	Description
GAIN_CH3	31:24	rwpt	**Gain Calibration for channel 3** For ADC output set CALIB_EN_3 = 0
RES	23:21	r	**Reserved** Always read as 0
OFFS_CH3	20:16	rwpt	**Offset Calibration for channel 3** For ADC output set CALIB_EN_3 = 0
GAIN_CH2	15:8	rwpt	**Gain Calibration for channel 2** For ADC output set CALIB_EN_2 = 0
RES	7:5	r	**Reserved** Always read as 0
OFFS_CH2	4:0	rwpt	**Offset Calibration for channel 2** For ADC output set CALIB_EN_2 = 0

Table 387 RESET of ADC2_CAL_CH2_3

Register Reset Type	Reset Values	Reset Short Name	Reset Mode	Note
RESET_TYPE_4	00000000_H	RESET_TYPE_4		

ADC2 Calibration Value Channel 4 & 5

ADC2_CAL_CH4_5	Offset	Reset Value
Calibration for Channel 4 & 5	$3C_H$	see Table 388

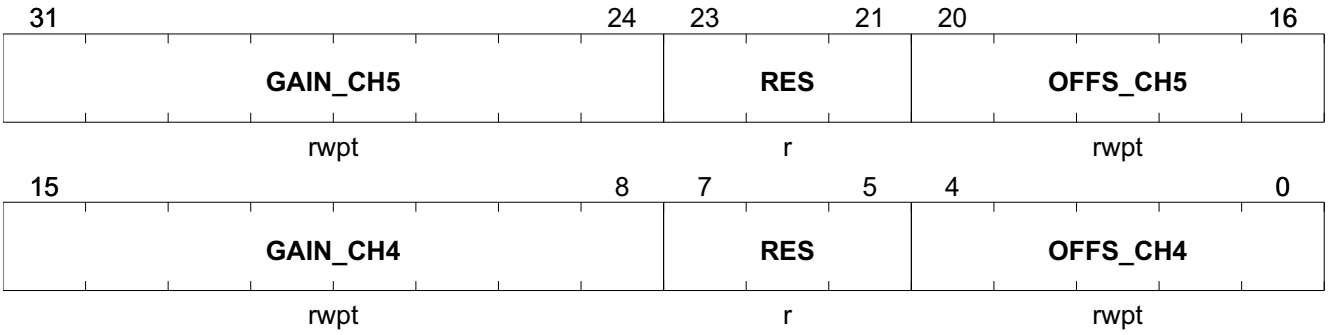

Field	Bits	Type	Description
GAIN_CH5	31:24	rwpt	**Gain Calibration for channel 5** For ADC output set CALIB_EN_5 = 0
RES	23:21	r	**Reserved** Always read as 0
OFFS_CH5	20:16	rwpt	**Offset Calibration for channel 5** For ADC output set CALIB_EN_5 = 0
GAIN_CH4	15:8	rwpt	**Gain Calibration for channel 4** For ADC output set CALIB_EN_4 = 0
RES	7:5	r	**Reserved** Always read as 0
OFFS_CH4	4:0	rwpt	**Offset Calibration for channel 4** For ADC output set CALIB_EN_4 = 0

Table 388 RESET of ADC2_CAL_CH4_5

Register Reset Type	Reset Values	Reset Short Name	Reset Mode	Note
RESET_TYPE_4	00000000_H	RESET_TYPE_4		

ADC2 Calibration Value Channel 6 & 7

ADC2_CAL_CH6_7	Offset	Reset Value
Calibration for Channel 6 & 7	40_H	see Table 389

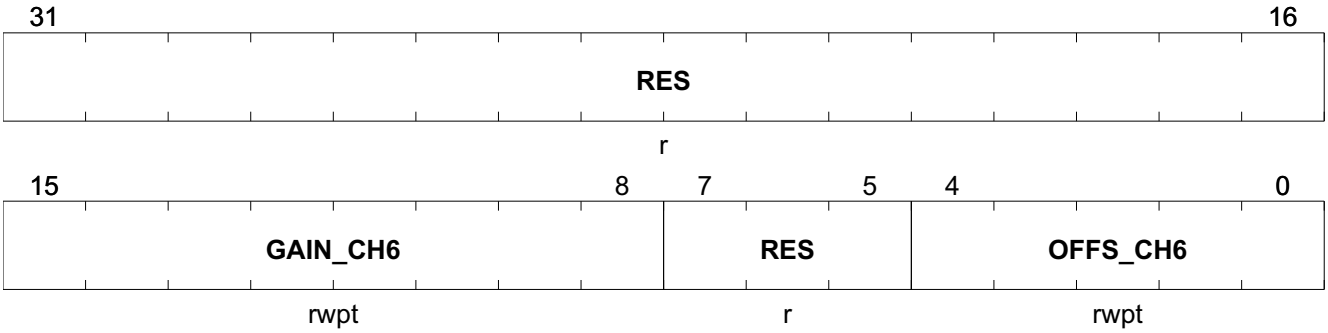

Field	Bits	Type	Description
RES	31:16	r	**Reserved** Always read as 0
GAIN_CH6	15:8	rwpt	**Gain Calibration for channel 6** For ADC output set CALIB_EN_6 = 0
RES	7:5	r	**Reserved** Always read as 0
OFFS_CH6	4:0	rwpt	**Offset Calibration for channel 6** For ADC output set CALIB_EN_6 = 0

Table 389 RESET of ADC2_CAL_CH6_7

Register Reset Type	Reset Values	Reset Short Name	Reset Mode	Note
RESET_TYPE_4	00000000_H	RESET_TYPE_4		

23.6 IIR-Filter

23.6.1 Functional Description

To cancel low frequency noise out of the measured signal, every channel of the digital signal includes a first order IIR Filter. The structure of the IIR Filter is shown in the picture below.

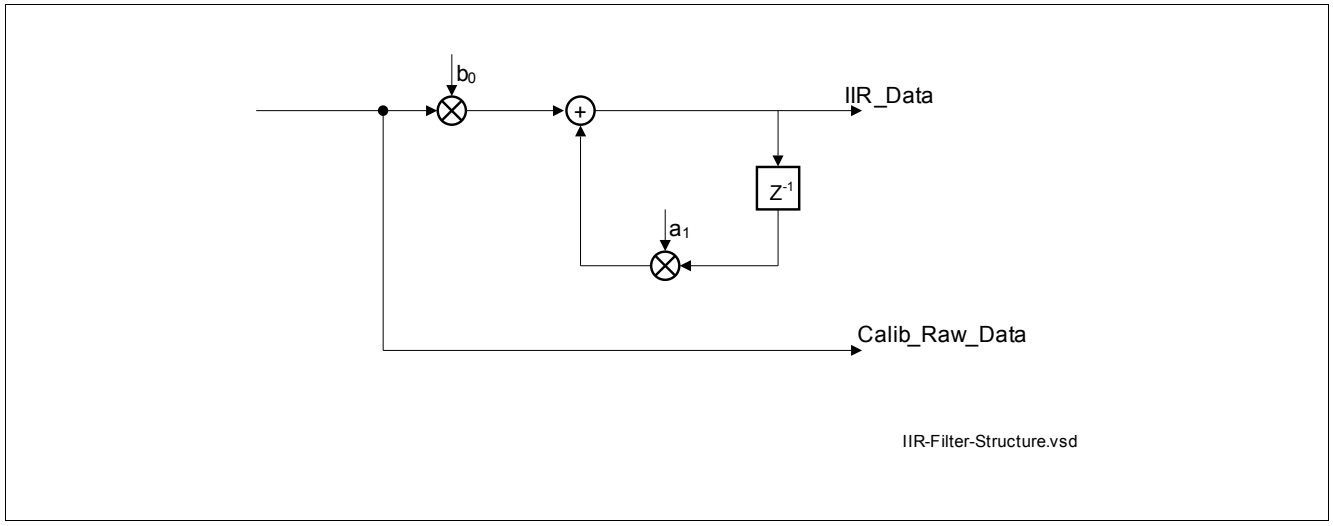

Figure 191 IIR-Filter Implementation Structure

$$H_{IIR}(z) = \frac{b_0}{(1 - a_1 * z^{-1})} \tag{22}$$

This filter allows an effective suppression of high-frequency components like noise or crosstalk caused by HF-components in order to avoid the generation of unwanted interrupts. The coefficient b can be expressed as:

$$b_0 = 1 - a_1 \tag{23}$$

With the coefficient b implemented in the IIR Filter transfer function, it looks like:

$$H_{IIR}(z) = \frac{1 - a_1}{(1 - a_1 * z^{-1})} \tag{24}$$

The IIR Filter transfer function is shown in the plot below.

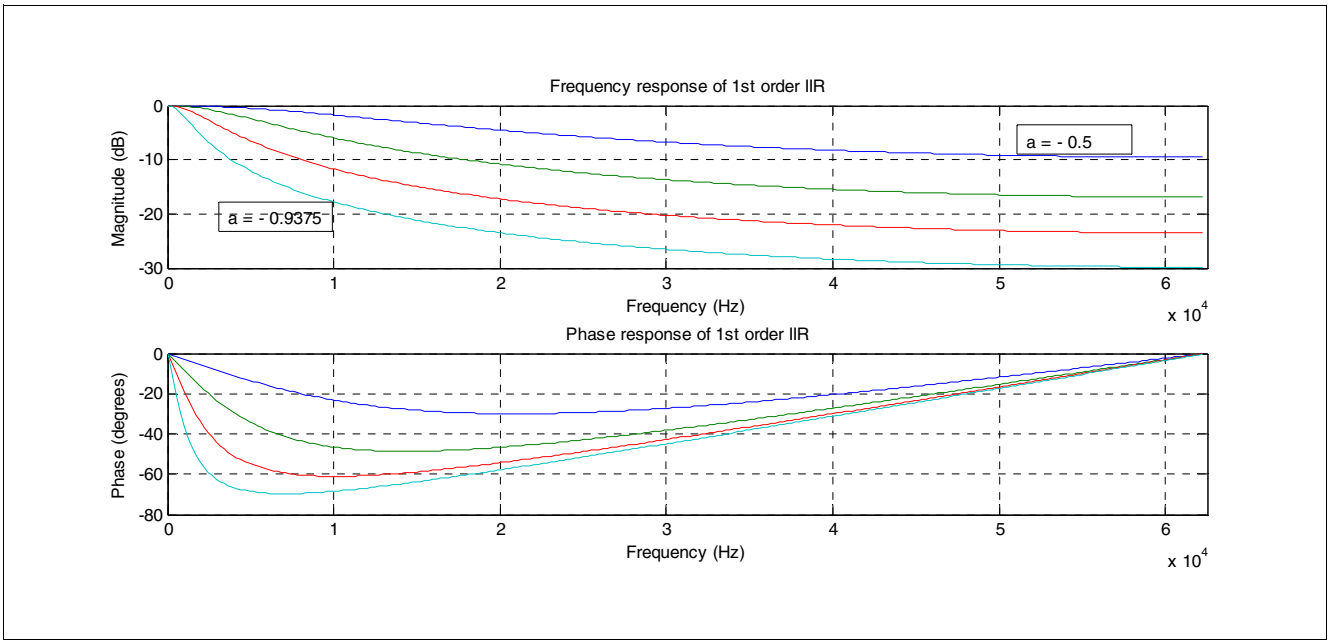

Figure 192 IIR filter transfer function for different filter length fl (1MHz corresponds to 1/2*channel sampling frequency)

23.6.1.1 Step Response

The IIR filter's step response time is shown in the figure below:

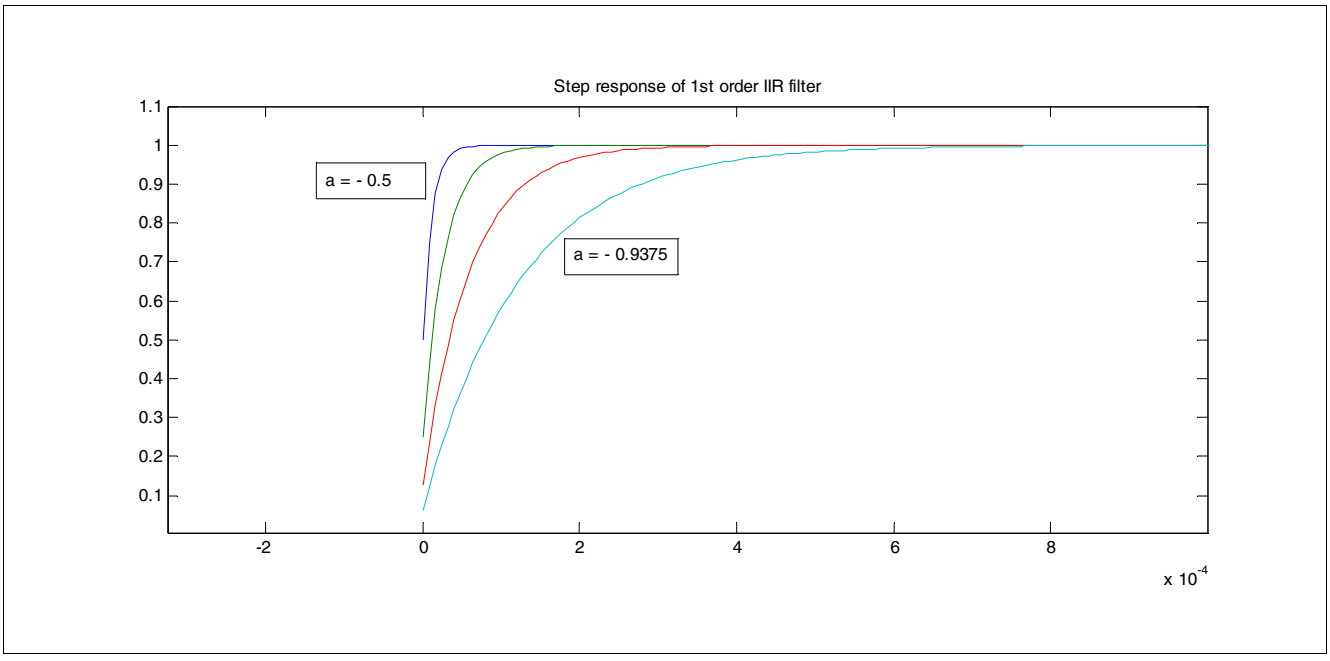

Figure 193 IIR Step Response Time

Table 390 summarizes the main filter characteristics.

Table 390 IIR filter characteristics

Filter coefficient	Group delay at=ω0
a	**τ[samples]**
-2^{-1}	2
-2^{-2}	4
-2^{-3}	8
-2^{-4}	16

23.6.2 IIR Filter Control Registers

The IIR Filter can also be configured by the **sfr** Register shown below. The registers which cannot be written by the user have the attribute **rwp**.

The **ADC2_FILT_OUT0** to **ADC2_FILT_OUT6** registers are 10 bits wide, but the ADC delivers only a resolution of 8 bits. **Table 391** shows how the lower two bits are determined.

Table 391 ADC2_FILT_OUT Register Setting

ADC2_CTRL1.calib_en	ADC2_CTRL4.filt_out_sel	ADC2_FILT_OUT0.output[1:0]
0	0	“00”
0	1	“filt_out(3:2)”
1	0	“calib_out(1:0)”
1	1	“filt_out(3:2)”

The result of the calibration unit is 10 bits (see **Figure 2**), the output is feed into the IIR filter. The internal result of the IIR filter is 12 bits (see **Figure 4**), the output is converted to 10 bit and feed into the postprocessing. The user can monitor the calculated values in the **ADC2_FILT_OUT0** to **ADC2_FILT_OUT6** registers and gets access to 10 bit wide result information.

Table 392 Register Overview

Register Short Name	Register Long Name	Offset Address	Reset Value
IIR Filter Control Registers,			
ADC2_FILTCOEFF0_7	Filter Coefficients ADC Channel 0-7	48_H	0000 1555$_H$
ADC2_FILT_OUT0	ADC or Filter Output Channel 0	50_H	0000 0000 0000 0000 0000 00XX XXXX XXXX$_B$
ADC2_FILT_OUT1	ADC or Filter Output Channel 1	54_H	0000 0000 0000 0000 0000 00XX XXXX XXXX$_B$
ADC2_FILT_OUT2	ADC or Filter Output Channel 2	58_H	0000 0000 0000 0000 0000 00XX XXXX XXXX$_B$
ADC2_FILT_OUT3	ADC or Filter Output Channel 3	$5C_H$	0000 0000 0000 0000 0000 00XX XXXX XXXX$_B$
ADC2_FILT_OUT4	ADC or Filter Output Channel 4	60_H	0000 0000 0000 0000 0000 00XX XXXX XXXX$_B$

Table 392 Register Overview (cont'd)

Register Short Name	Register Long Name	Offset Address	Reset Value
ADC2_FILT_OUT5	ADC or Filter Output Channel 5	64_H	0000 0000 0000 0000 0000 00XX XXXX XXXX$_B$
ADC2_FILT_OUT6	ADC or Filter Output Channel 6	68_H	0000 0000 0000 0000 0000 00XX XXXX XXXX$_B$

The registers are addressed wordwise.

Filter Coefficients ADC Channel 0-7

ADC2_FILTCOEFF0_7 — **Filter Coefficients ADC Channel 0-7**

Offset 48_H

Reset Value see Table 393

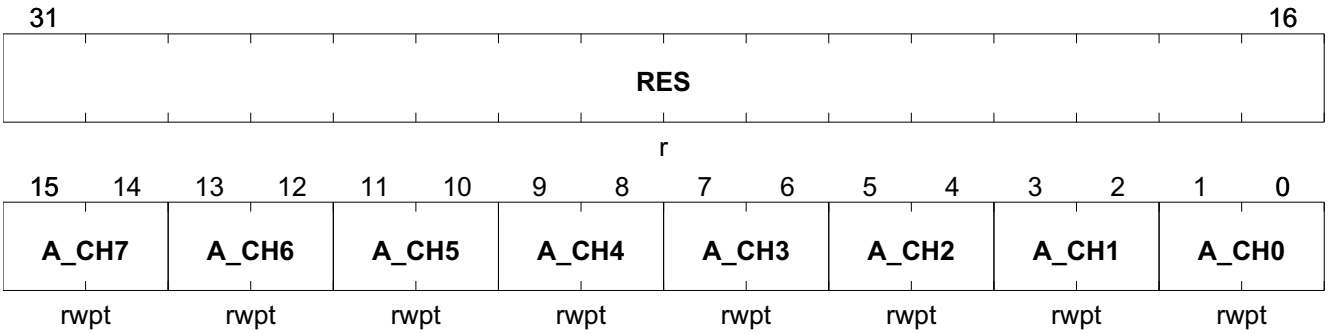

Field	Bits	Type	Description
RES	31:16	r	**Reserved** Always read as 0
A_CH7	15:14	rwpt	**Filter Coefficient A for ADC channel 7** *Note: this bits are dedicated for future use. They are always read as 0.* 00_B **1/2** weight of current sample 01_B **1/4** weight of current sample 10_B **1/8** weight of current sample 11_B **1/16** weight of current sample
A_CH6	13:12	rwpt	**Filter Coefficient A for ADC channel 6** 00_B **1/2** weight of current sample 01_B **1/4** weight of current sample 10_B **1/8** weight of current sample 11_B **1/16** weight of current sample

Field	Bits	Type	Description
A_CH5	11:10	rwpt	**Filter Coefficient A for ADC channel 5** 00_B **1/2** weight of current sample 01_B **1/4** weight of current sample 10_B **1/8** weight of current sample 11_B **1/16** weight of current sample
A_CH4	9:8	rwpt	**Filter Coefficient A for ADC channel 4** 00_B **1/2** weight of current sample 01_B **1/4** weight of current sample 10_B **1/8** weight of current sample 11_B **1/16** weight of current sample
A_CH3	7:6	rwpt	**Filter Coefficient A for ADC channel 3** 00_B **1/2** weight of current sample 01_B **1/4** weight of current sample 10_B **1/8** weight of current sample 11_B **1/16** weight of current sample
A_CH2	5:4	rwpt	**Filter Coefficient A for ADC channel 2** 00_B **1/2** weight of current sample 01_B **1/4** weight of current sample 10_B **1/8** weight of current sample 11_B **1/16** weight of current sample
A_CH1	3:2	rwpt	**Filter Coefficient A for ADC channel 1** 00_B **1/2** weight of current sample 01_B **1/4** weight of current sample 10_B **1/8** weight of current sample 11_B **1/16** weight of current sample
A_CH0	1:0	rwpt	**Filter Coefficient A for ADC channel 0** 00_B **1/2** weight of current sample 01_B **1/4** weight of current sample 10_B **1/8** weight of current sample 11_B **1/16** weight of current sample

Table 393 RESET of ADC2_FILTCOEFF0_7

Register Reset Type	Reset Values	Reset Short Name	Reset Mode	Note
RESET_TYPE_4	00001555_H	RESET_TYPE_4		

ADC or Filter Output Channel 0

This registers reflects the current value of channel 0 of the measurement chain, which is assigned to VBAT_SENSE measurement.

ADC2_FILT_OUT0	Offset	Reset Value
ADC or Filter Output Channel 0	50_H	see Table 394

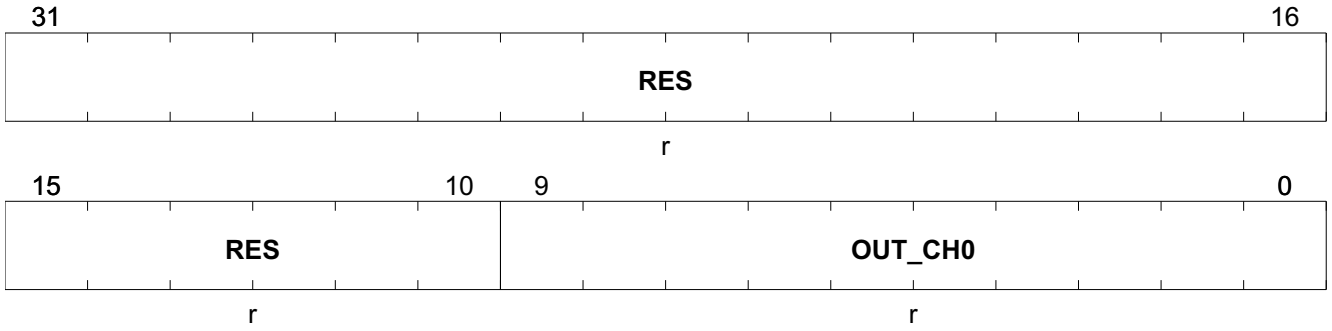

Field	Bits	Type	Description
RES	31:10	r	**Reserved** Always read as 0
OUT_CH0	9:0	r	**ADC or filter output value channel 0** For ADC output set ADC2_FILTUP_0_EN = 0

Table 394 RESET of ADC2_FILT_OUT0

Register Reset Type	Reset Values	Reset Short Name	Reset Mode	Note
RESET_TYPE_3	$00000XXX_H$	RESET_TYPE_3		Exact Reset Value: 0000 0000 0000 0000 0000 00XX XXXX XXXX(B).

ADC or Filter Output Channel 1

ADC2_FILT_OUT1	Offset	Reset Value
ADC or Filter Output Channel 1	54_H	see Table 395

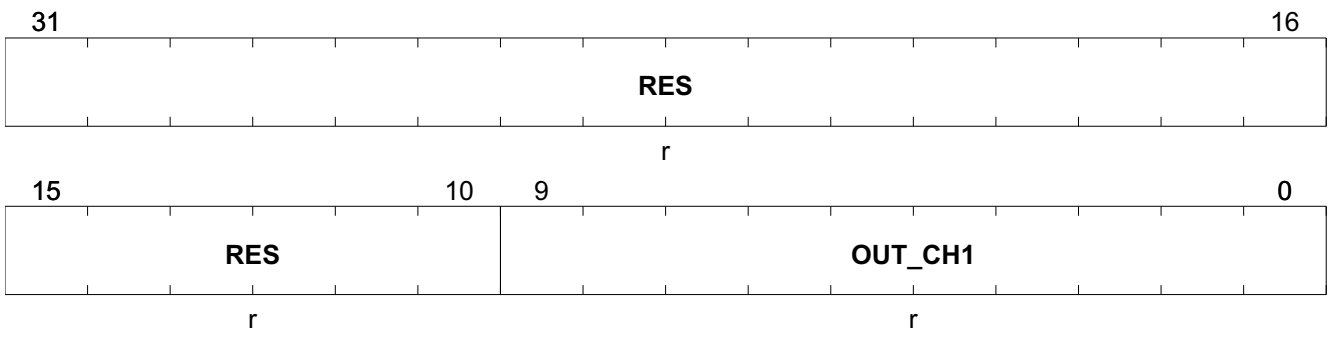

Field	Bits	Type	Description
RES	31:10	r	**Reserved** Always read as 0
OUT_CH1	9:0	r	**ADC or filter output value channel 1** For ADC output set ADC2_FILTUP_1_EN = 0

Table 395 RESET of ADC2_FILT_OUT1

Register Reset Type	Reset Values	Reset Short Name	Reset Mode	Note
RESET_TYPE_3	$00000XXX_H$	RESET_TYPE_3		Exact Reset Value: 0000 0000 0000 0000 0000 00XX XXXX XXXX(B).

ADC or Filter Output Channel 2

ADC2_FILT_OUT2	Offset	Reset Value
ADC or Filter Output Channel 2	58_H	see Table 396

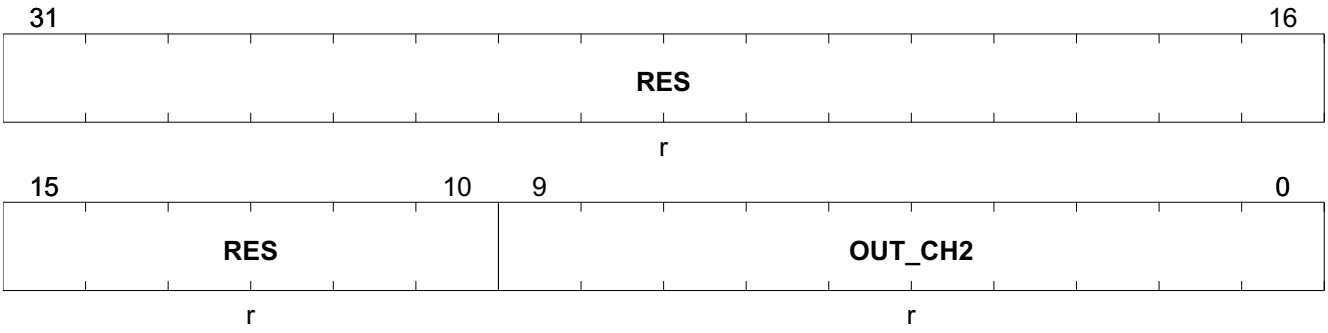

Field	Bits	Type	Description
RES	31:10	r	**Reserved** Always read as 0
OUT_CH2	9:0	r	**ADC or filter output value channel 2** For ADC output set ADC2_FILTUP_2_EN = 0

Table 396 RESET of ADC2_FILT_OUT2

Register Reset Type	Reset Values	Reset Short Name	Reset Mode	Note
RESET_TYPE_3	$00000XXX_H$	RESET_TYPE_3		Exact Reset Value: 0000 0000 0000 0000 0000 00XX XXXX XXXX(B).

ADC or Filter Output Channel 3

ADC2_FILT_OUT3	Offset	Reset Value
ADC or Filter Output Channel 3	$5C_H$	see Table 397

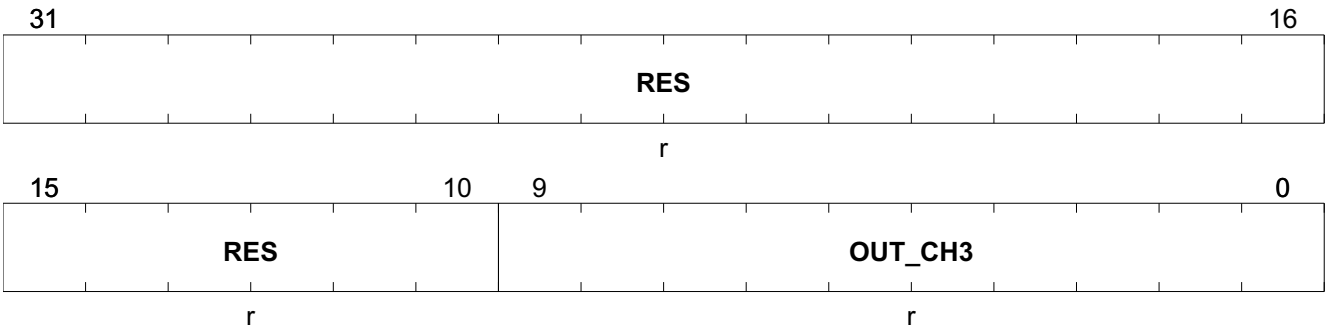

Field	Bits	Type	Description
RES	31:10	r	**Reserved** Always read as 0
OUT_CH3	9:0	r	**ADC or filter output value channel 3** For ADC output set ADC2_FILTUP_3_EN = 0

Table 397 RESET of ADC2_FILT_OUT3

Register Reset Type	Reset Values	Reset Short Name	Reset Mode	Note
RESET_TYPE_3	$00000XXX_H$	RESET_TYPE_3		Exact Reset Value: 0000 0000 0000 0000 0000 00XX XXXX XXXX(B).

ADC or Filter Output Channel 4

ADC2_FILT_OUT4	Offset	Reset Value
ADC or Filter Output Channel 4	60_H	see Table 398

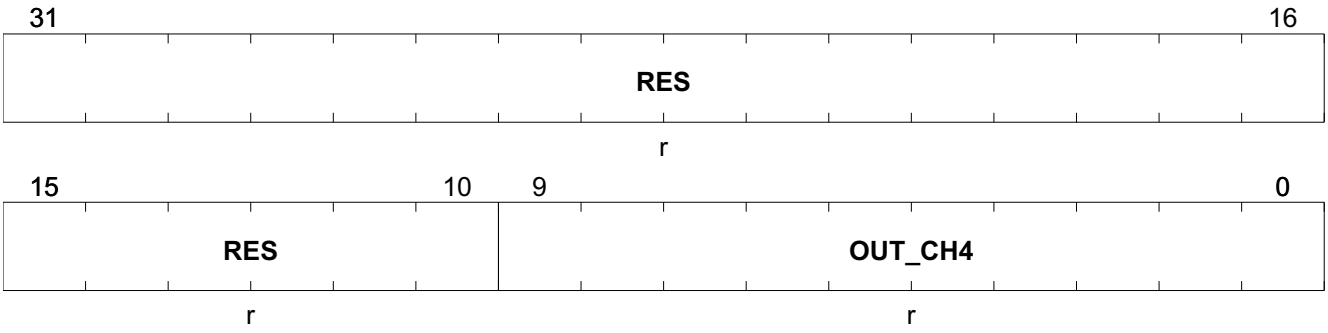

Field	Bits	Type	Description
RES	31:10	r	**Reserved** Always read as 0
OUT_CH4	9:0	r	**ADC or filter output value channel 4** For ADC output set ADC2_FILTUP_4_EN = 0

Table 398 RESET of ADC2_FILT_OUT4

Register Reset Type	Reset Values	Reset Short Name	Reset Mode	Note
RESET_TYPE_3	$00000XXX_H$	RESET_TYPE_3		Exact Reset Value: 0000 0000 0000 0000 0000 00XX XXXX XXXX(B).

ADC or Filter Output Channel 5

ADC2_FILT_OUT5	Offset	Reset Value
ADC or Filter Output Channel 5	64_H	see Table 399

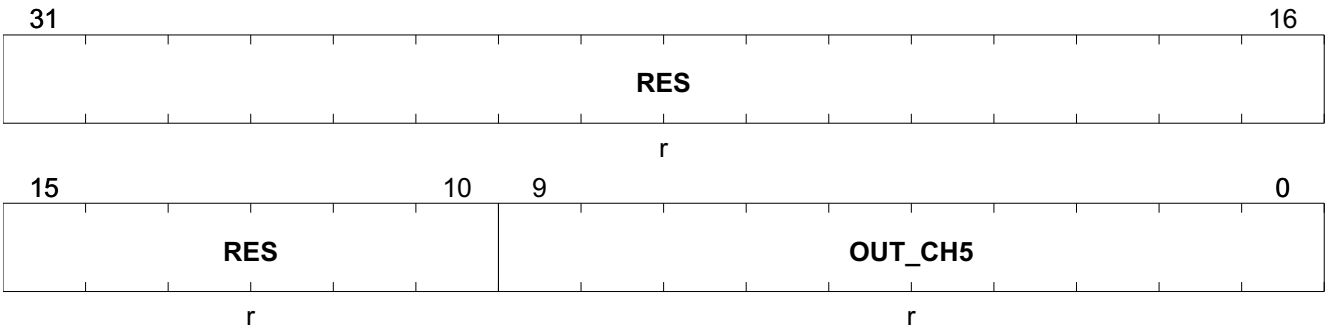

Field	Bits	Type	Description
RES	31:10	r	**Reserved** Always read as 0
OUT_CH5	9:0	r	**ADC or filter output value channel 5** For ADC output set ADC2_FILTUP_5_EN = 0

Table 399 RESET of ADC2_FILT_OUT5

Register Reset Type	Reset Values	Reset Short Name	Reset Mode	Note
RESET_TYPE_3	$00000XXX_H$	RESET_TYPE_3		Exact Reset Value: 0000 0000 0000 0000 0000 00XX XXXX XXXX(B).

ADC or Filter Output Channel 6

ADC2_FILT_OUT6	Offset	Reset Value
ADC or Filter Output Channel 6	68_H	see Table 400

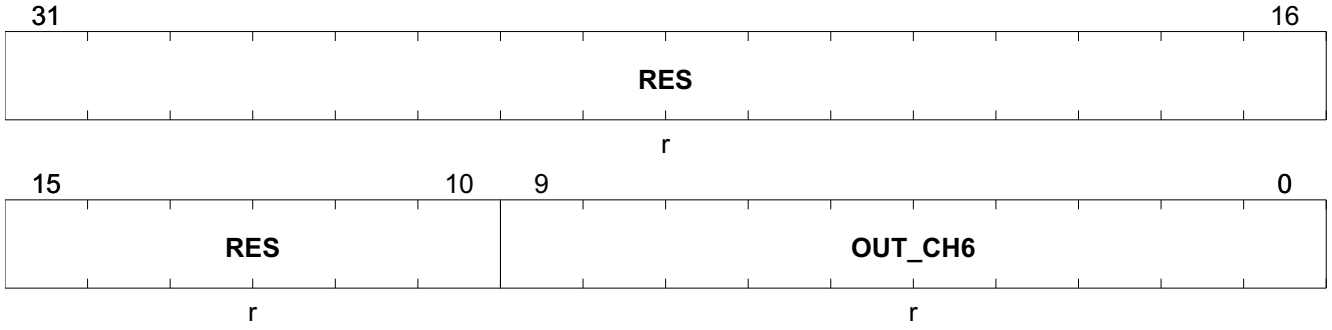

Field	Bits	Type	Description
RES	31:10	r	**Reserved** Always read as 0
OUT_CH6	9:0	r	**ADC or filter output value channel 6** For ADC output set ADC2_FILTUP_6_EN = 0

Table 400 RESET of ADC2_FILT_OUT6

Register Reset Type	Reset Values	Reset Short Name	Reset Mode	Note
RESET_TYPE_3	$00000XXX_H$	RESET_TYPE_3		Exact Reset Value: 0000 0000 0000 0000 0000 00XX XXXX XXXX(B).

23.7 Signal Processing

23.7.1 Functional Description

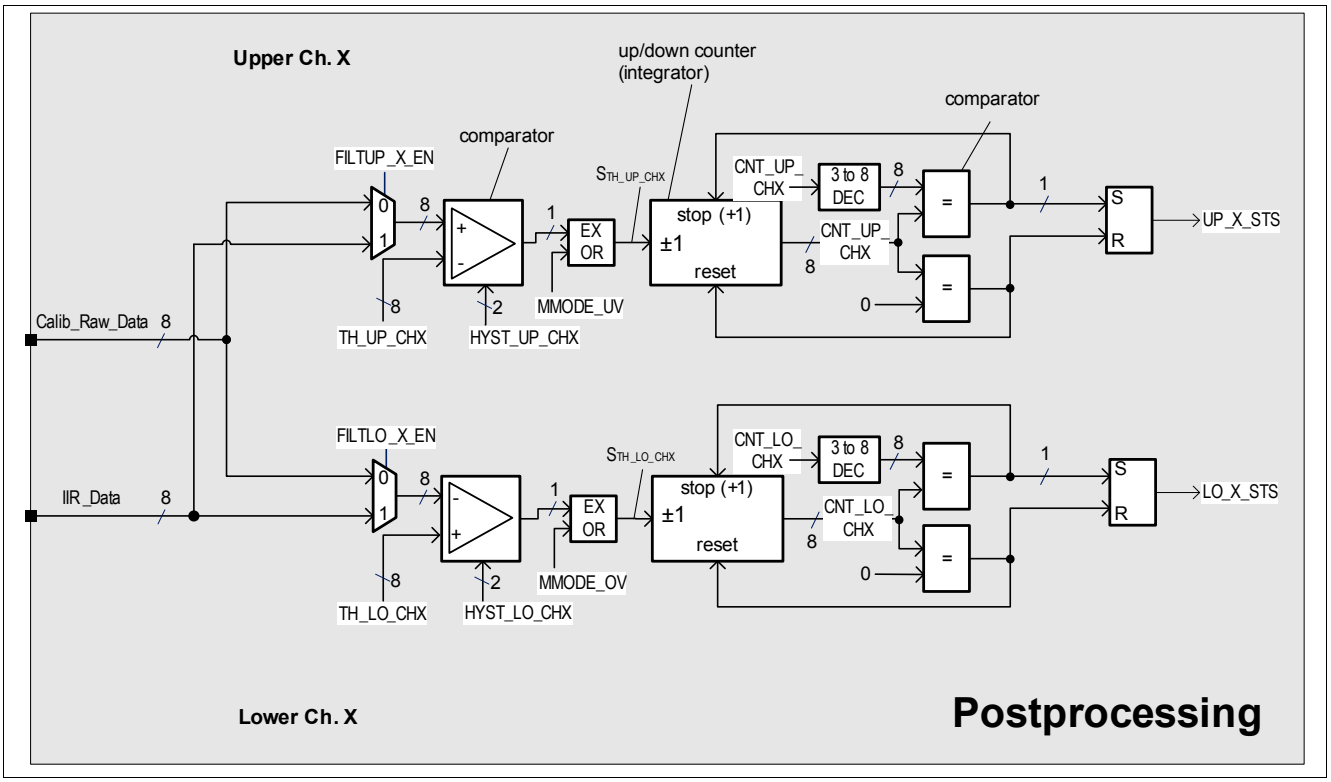

Figure 194 Postprocessing Channel Block Diagram for Voltage and Temperature Measurements

As shown in **Figure 194** an adjustable filter can be applied for the upper and the lower measurement channel, which averages 2, 4, 8 or 16 measurement values continuously. The filtered signal or the demultiplexed ADC output signal ADC_OUTX is compared with an upper threshold TH_UP_CHX and a lower threshold TH_LO_CHX. When the thresholds are exceeded, the comparator outputs get active. For all measurement modes a freely adjustable hysteresis can be defined which is defined with the HYST_UP_CHX and HYST_LO_CHX values.

In addition to the first filter stage, the second filters (counters) integrate the comparator output values S_{TH_UP/LO_CHX} until an individual upper and lower timing threshold $2^{CNT_UP/LO_CHX}$ is reached. When reaching the upper timing threshold $2^{CNT_UP_CHX}$, the upper counter increment is stalled and the status output CHX_UP_STS is set. For MMODE_OV = 1, the inverted lower comparator output signal $S_{TH_LO_CHX}$ is normalized again. When the output signal is above TH_LO_CHX, the lower counter is incremented until the max. threshold $2^{CNT_LO_CHX}$ is reached. Individual interrupts for the upper and lower channel can be triggered with the rising edge of the status signals UP/LO_X_STS.

In general the IIR filter stage suppresses higher frequency noise efficiently and triggering with the upper and lower threshold TH_UP/LO_CHX are dependent on the measured values. Hence short high-level spikes might pass the thresholds. In opposite to the first stage the nature of the second filter stage is more a time filter, which is less dependent on the measurement values but on event durations of S_{TH_LO/UP_CHX} as generated by the first comparator stage. Therefore the second stage has a lower noise suppression performance for higher frequencies and also adds a delay for the trigger time proportional to $2^{CNT_LO/HI_CHX}$.

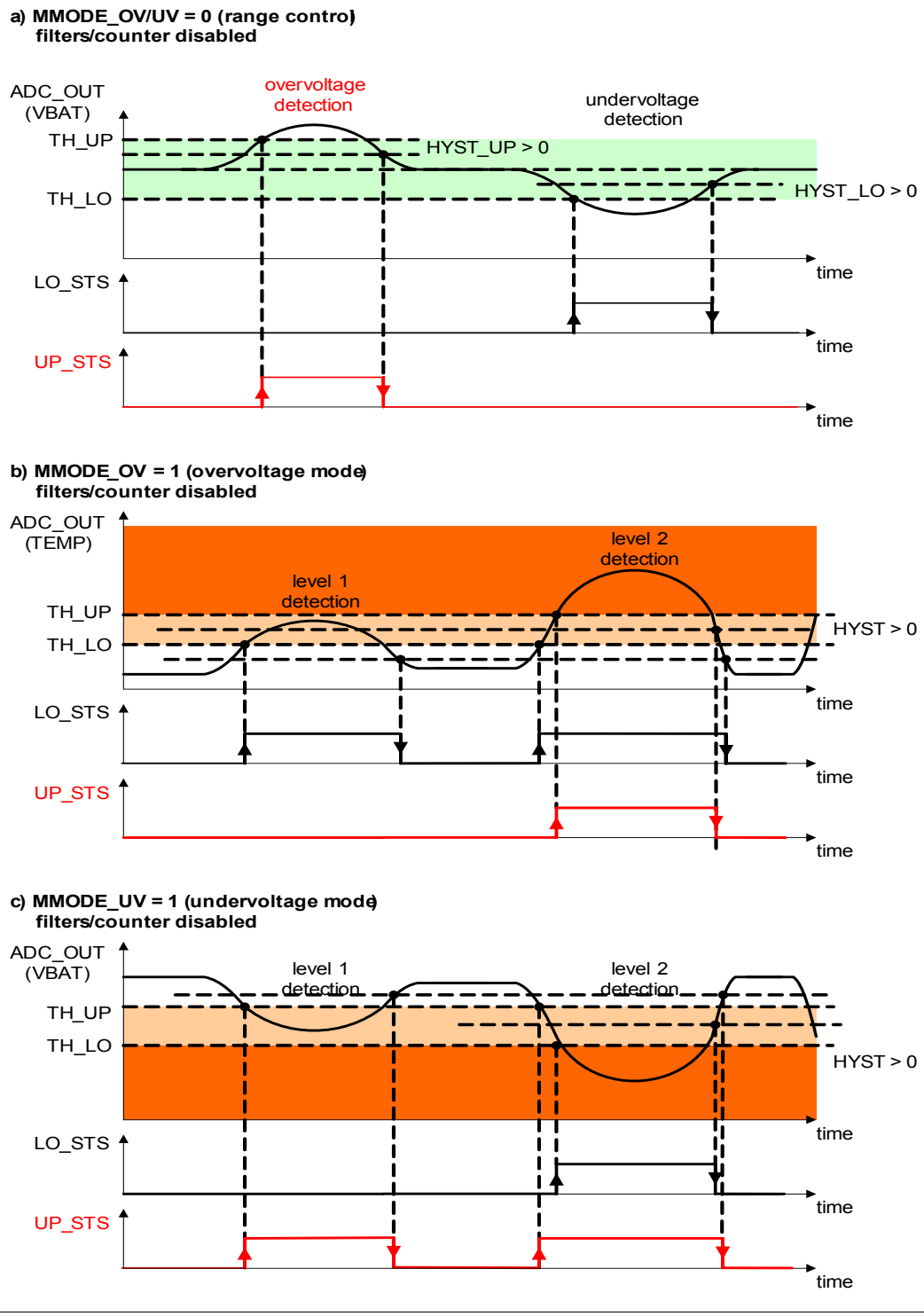

Figure 195 Measurement Examples of a Measurement Channel with Disabled Filters

Figure 195 shows three examples, an over- and undervoltage detection (e.g. VBAT_SENSE monitoring), a 2-step overvoltage and a 2-step undervoltage detection. The modes MMODE_OV/UV = 1 can be used as prewarning for the application software (e.g. close to overtemperature or supply undervoltage).

23.7.2 Postprocessing Control Registers

The Temperature Sensor is fully controllable by the below listed sfr Registers.

Table 401 Register Overview

Register Short Name	Register Long Name	Offset Address	Reset Value
Postprocessing Control Registers,			
ADC2_FILT_UP_CTRL	Upper Threshold Filter Enable	78_H	0000 007F$_H$
ADC2_FILT_LO_CTRL	Lower Threshold Filter Enable	$7C_H$	0000 007F$_H$
ADC2_TH0_3_LOWER	Lower Comparator Trigger Level Channel 0 - 3	80_H	9D6F BF25$_H$
ADC2_TH4_7_LOWER	Lower Comparator Trigger Level Channel 4 - 7	84_H	00C8 D4D4$_H$
ADC2_TH0_3_UPPER	Upper Comparator Trigger Level Channel 0 - 3	$8C_H$	EBE9 E9E4$_H$
ADC2_TH4_7_UPPER	Upper Comparator Trigger Level Channel 4 - 7	90_H	00E2 E2FB$_H$
ADC2_CNT0_3_LOWER	Lower Counter Trigger Level Channel 0 - 3	98_H	0909 0909$_H$
ADC2_CNT4_7_LOWER	Lower Counter Trigger Level Channel 4 - 7	$9C_H$	000B 0909$_H$
ADC2_CNT0_3_UPPER	Upper Counter Trigger Level Channel 0 - 3	$A4_H$	0909 0909$_H$
ADC2_CNT4_7_UPPER	Upper Counter Trigger Level Channel 4 & 7	$A8_H$	000B 0909$_H$
ADC2_MMODE0_7	Overvoltage Measurement Mode of Ch 0 - 7	$B0_H$	0000 2800$_H$

The registers are addressed wordwise.

Upper Threshold Filter Enable

ADC2_FILT_UP_CTRL	Offset	Reset Value
Upper Threshold Filter Enable	78_H	see Table 402

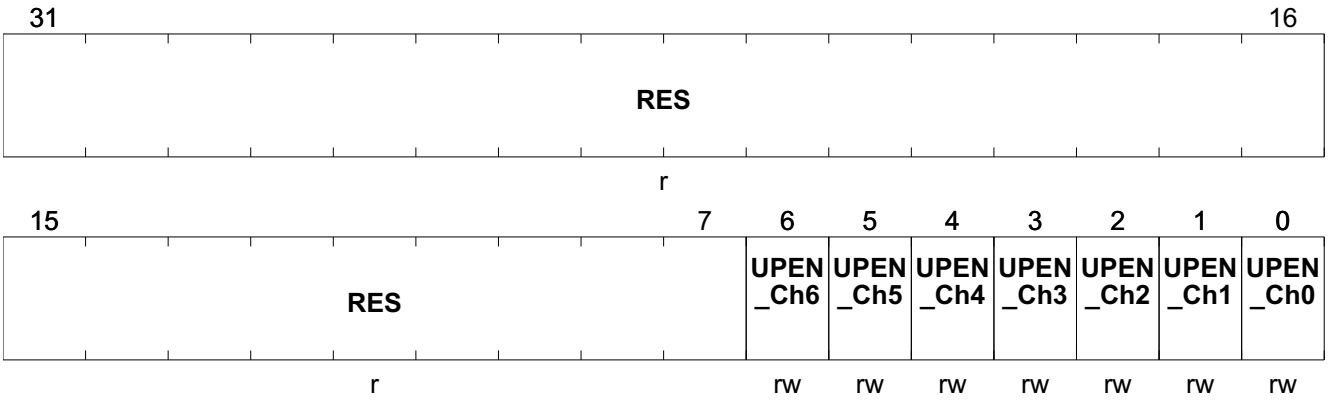

Field	Bits	Type	Description
RES	31:7	r	**Reserved** Always read as 0
UPEN_Ch6	6	rw	**Upper threshold IIR filter enable ch 6** 0_B disable 1_B enable
UPEN_Ch5	5	rw	**Upper threshold IIR filter enable ch 5** 0_B disable 1_B enable
UPEN_Ch4	4	rw	**Upper threshold IIR filter enable ch 4** 0_B disable 1_B enable
UPEN_Ch3	3	rw	**Upper threshold IIR filter enable ch 3** 0_B disable 1_B enable
UPEN_Ch2	2	rw	**Upper threshold IIR filter enable ch 2** 0_B disable 1_B enable
UPEN_Ch1	1	rw	**Upper threshold IIR filter enable ch 1** 0_B disable 1_B enable
UPEN_Ch0	0	rw	**Upper threshold IIR filter enable ch 0** 0_B disable 1_B enable

Table 402 RESET of ADC2_FILT_UP_CTRL

Register Reset Type	Reset Values	Reset Short Name	Reset Mode	Note
RESET_TYPE_4	$0000007F_H$	RESET_TYPE_4		

Lower Threshold Filter Enable

Setting this register enables the IIR filter structure for the postprocessing of the lower threshold. This can be used e.g. as shutdown signal for the system, in case of supply loss.

ADC2_FILT_LO_CTRL	Offset	Reset Value
Lower Threshold Filter Enable	$7C_H$	see Table 403

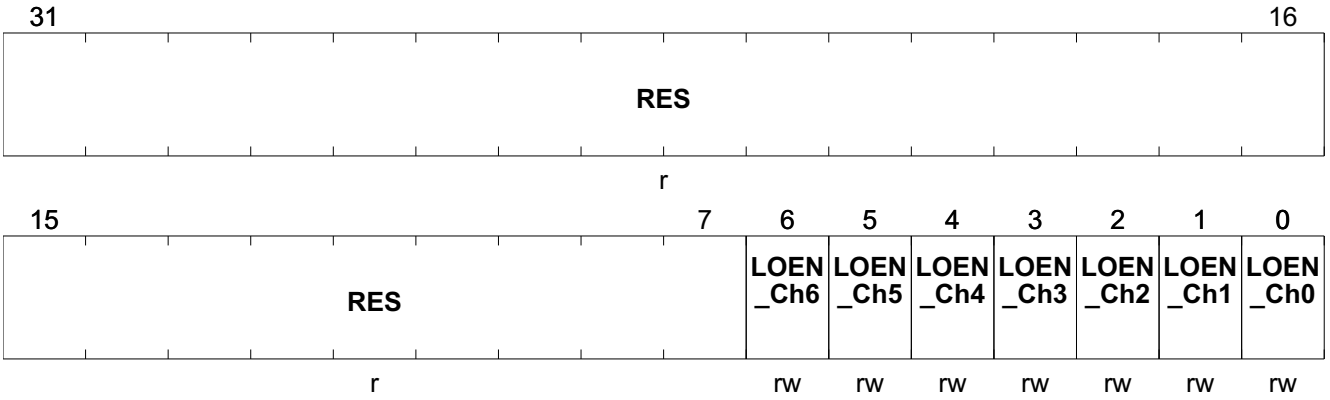

Field	Bits	Type	Description
RES	31:7	r	**Reserved** Always read as 0
LOEN_Ch6	6	rw	**Lower threshold IIR filter enable ch 6** 0_B disable 1_B enable
LOEN_Ch5	5	rw	**Lower threshold IIR filter enable ch 5** 0_B disable 1_B enable
LOEN_Ch4	4	rw	**Lower threshold IIR filter enable ch 4** 0_B disable 1_B enable
LOEN_Ch3	3	rw	**Lower threshold IIR filter enable ch 3** 0_B disable 1_B enable
LOEN_Ch2	2	rw	**Lower threshold IIR filter enable ch 2** 0_B disable 1_B enable
LOEN_Ch1	1	rw	**Lower threshold IIR filter enable ch 1** 0_B disable 1_B enable
LOEN_Ch0	0	rw	**Lower threshold IIR filter enable ch 0** 0_B disable 1_B enable

Table 403 RESET of ADC2_FILT_LO_CTRL

Register Reset Type	Reset Values	Reset Short Name	Reset Mode	Note
RESET_TYPE_4	$0000007F_H$	RESET_TYPE_4		

Overvoltage Measurement Mode of Channel 0-7

ADC2_MMODE0_7	Offset	Reset Value
Measurement Mode of Ch 0-7	$B0_H$	see Table 404

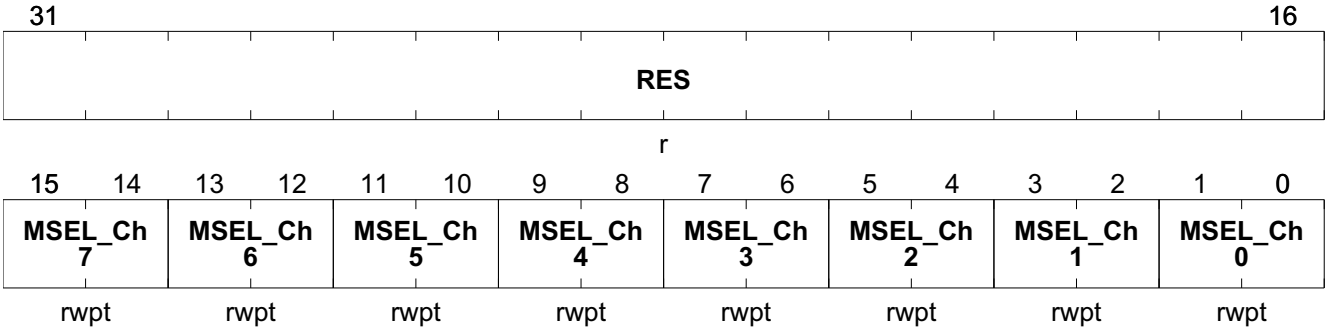

Field	Bits	Type	Description
RES	31:16	r	**Reserved** Always read as 0
MSEL_Ch7	15:14	rwpt	**Measurement mode ch 7** *Note: this bits are dedicated for future use. They are always read as 0.* 00_B **MMODE0** upper & lower voltage/limit measurement 01_B **MMODEUV** undervoltage/-limit measurement 10_B **MMODEOV** overvoltage/-limit measurement 11_B **RESERVED** reserved
MSEL_Ch6	13:12	rwpt	**Measurement mode ch 6** 00_B **MMODE0** upper & lower voltage/limit measurement 01_B **MMODEUV** undervoltage/-limit measurement 10_B **MMODEOV** overvoltage/-limit measurement 11_B **RESERVED** reserved
MSEL_Ch5	11:10	rwpt	**Measurement mode ch 5** 00_B **MMODE0** upper & lower voltage/limit measurement 01_B **MMODEUV** undervoltage/-limit measurement 10_B **MMODEOV** overvoltage/-limit measurement 11_B **RESERVED** reserved
MSEL_Ch4	9:8	rwpt	**Measurement mode ch 4** 00_B **MMODE0** upper & lower voltage/limit measurement 01_B **MMODEUV** undervoltage/-limit measurement 10_B **MMODEOV** overvoltage/-limit measurement 11_B **RESERVED** reserved

Field	Bits	Type	Description
MSEL_Ch3	7:6	rwpt	**Measurement mode ch 3** 00_B **MMODE0** upper & lower voltage/limit measurement 01_B **MMODEUV** undervoltage/-limit measurement 10_B **MMODEOV** overvoltage/-limit measurement 11_B **RESERVED** reserved
MSEL_Ch2	5:4	rwpt	**Measurement mode ch 2** 00_B **MMODE0** upper & lower voltage/limit measurement 01_B **MMODEUV** undervoltage/-limit measurement 10_B **MMODEOV** overvoltage/-limit measurement 11_B **RESERVED** reserved
MSEL_Ch1	3:2	rwpt	**Measurement mode ch 1** 00_B **MMODE0** upper & lower voltage/limit measurement 01_B **MMODEUV** undervoltage/-limit measurement 10_B **MMODEOV** overvoltage/-limit measurement 11_B **RESERVED** reserved
MSEL_Ch0	1:0	rwpt	**Measurement mode ch 0** 00_B **MMODE0** upper & lower voltage/limit measurement 01_B **MMODEUV** undervoltage/-limit measurement 10_B **MMODEOV** overvoltage/-limit measurement 11_B **RESERVED** reserved

Table 404 RESET of ADC2_MMODE0_7

Register Reset Type	Reset Values	Reset Short Name	Reset Mode	Note
RESET_TYPE_4	00002800_H	RESET_TYPE_4		

Upper Comparator Trigger Level Channel 0 - 3

ADC2_TH0_3_UPPER	Offset	Reset Value
Upper Comparator Trigger Level Channel 0-3	$8C_H$	see Table 405

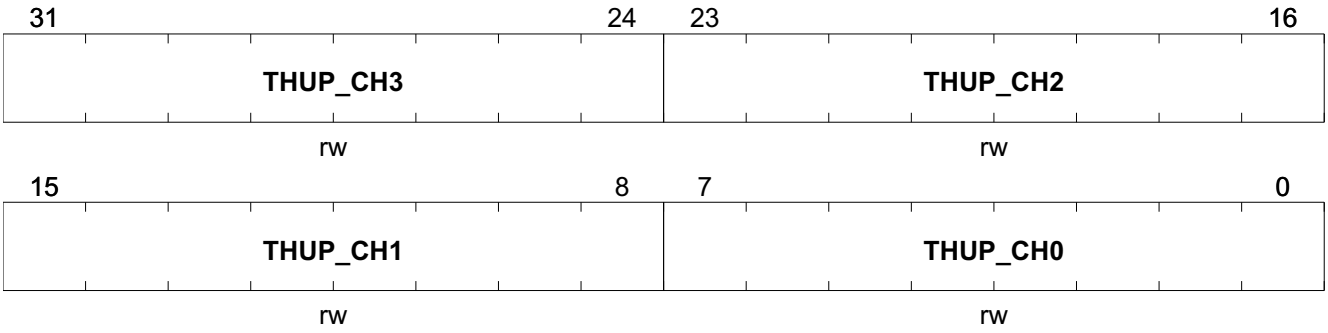

Field	Bits	Type	Description
THUP_CH3	31:24	rw	**Channel 3 upper trigger level** 00_H min. threshold value = 0 FF_H max. threshold value = 255
THUP_CH2	23:16	rw	**Channel 2 upper trigger level** 00_H min. threshold value = 0 FF_H max. threshold value = 255
THUP_CH1	15:8	rw	**Channel 1 upper trigger level** 00_H min. threshold value = 0 FF_H max. threshold value = 255
THUP_CH0	7:0	rw	**Channel 0 upper trigger level** 00_H min. threshold value = 0 FF_H max. threshold value = 255

Table 405 RESET of ADC2_TH0_3_UPPER

Register Reset Type	Reset Values	Reset Short Name	Reset Mode	Note
RESET_TYPE_4	$EBE9E9E4_H$	RESET_TYPE_4		

Upper Comparator Trigger Level Channel 4 - 7

ADC2_TH4_7_UPPER	Offset	Reset Value
Upper Comparator Trigger Level Channel 4 -7	90_H	see Table 406

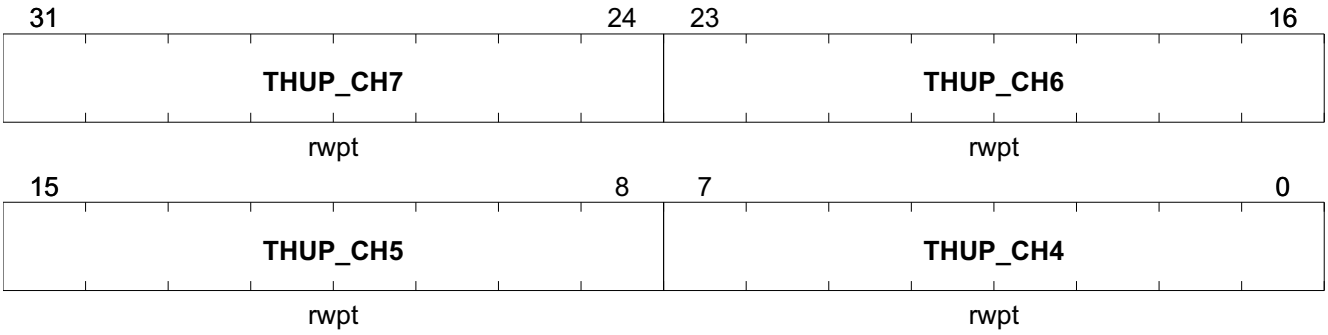

Field	Bits	Type	Description
THUP_CH7	31:24	rwpt	**Channel 7 upper trigger level** *Note: this bits are dedicated for future use. They are always read as 0.* 00_H min. threshold value = 0 FF_H max. threshold value = 255
THUP_CH6	23:16	rwpt	**Channel 6 upper trigger level** 00_H min threshold value = 0 FF_H max. threshold value = 255
THUP_CH5	15:8	rwpt	**Channel 5 upper trigger level** 00_H min. threshold value = 0 FF_H max. threshold value = 255
THUP_CH4	7:0	rwpt	**Channel 4 upper trigger level** 00_H min. threshold value = 0 FF_H max. threshold value = 255

Table 406 RESET of ADC2_TH4_7_UPPER

Register Reset Type	Reset Values	Reset Short Name	Reset Mode	Note
RESET_TYPE_4	$00E2E2FB_H$	RESET_TYPE_4		

Upper Counter Trigger Level Channel 0 - 3

ADC2_CNT0_3_UPPER	Offset	Reset Value
Upper Counter Trigger Level Channel 0 - 3	$A4_H$	see Table 407

31 29	28 27	26 24	23 21	20 19	18 16
RES	HYST_UP_CH3	CNT_UP_CH3	RES	HYST_UP_CH2	CNT_UP_CH2
r	rw	rw	r	rw	rw

15 13	12 11	10 8	7 5	4 3	2 0
RES	HYST_UP_CH1	CNT_UP_CH1	RES	HYST_UP_CH0	CNT_UP_CH0
r	rw	rw	r	rw	rw

Field	Bits	Type	Description
RES	31:29	r	**Reserved** Always read as 0
HYST_UP_CH3	28:27	rw	**Channel 3 upper hysteresis** 0_H **HYSTOFF** hysteresis switched off 1_H **HYST4** hysteresis = 4 2_H **HYST8** hysteresis = 8 3_H **HYST16** hysteresis = 16
CNT_UP_CH3	26:24	rw	**Upper timer trigger threshold channel 3** 0_H 1 measurement 1_H 2 measurements 2_H 4 measurements 3_H 8 measurements 4_H 16 measurements 5_H 32 measurements 6_H 63 measurements 7_H 63 measurements
RES	23:21	r	**Reserved** Always read as 0
HYST_UP_CH2	20:19	rw	**Channel 2 upper hysteresis** 0_H **HYSTOFF** hysteresis switched off 1_H **HYST4** hysteresis = 4 2_H **HYST8** hysteresis = 8 3_H **HYST16** hysteresis = 16

Field	Bits	Type	Description
CNT_UP_CH2	18:16	rw	**Upper timer trigger threshold channel 2** 0_H 1 measurement 1_H 2 measurements 2_H 4 measurements 3_H 8 measurements 4_H 16 measurements 5_H 32 measurements 6_H 63 measurements 7_H 63 measurements
RES	15:13	r	**Reserved** Always read as 0
HYST_UP_CH1	12:11	rw	**Channel 1 upper hysteresis** 0_H **HYSTOFF** hysteresis switched off 1_H **HYST4** hysteresis = 4 2_H **HYST8** hysteresis = 8 3_H **HYST16** hysteresis = 16
CNT_UP_CH1	10:8	rw	**Upper timer trigger threshold channel 1** 0_H 1 measurement 1_H 2 measurements 2_H 4 measurements 3_H 8 measurements 4_H 16 measurements 5_H 32 measurements 6_H 63 measurements 7_H 63 measurements
RES	7:5	r	**Reserved** Always read as 0
HYST_UP_CH0	4:3	rw	**Channel 0 upper hysteresis** 0_H **HYSTOFF** hysteresis switched off 1_H **HYST4** hysteresis = 4 2_H **HYST8** hysteresis = 8 3_H **HYST16** hysteresis = 16
CNT_UP_CH0	2:0	rw	**Upper timer trigger threshold channel 0** 0_H 1 measurement 1_H 2 measurements 2_H 4 measurements 3_H 8 measurements 4_H 16 measurements 5_H 32 measurements 6_H 63 measurements 7_H 63 measurements

Table 407 RESET of ADC2_CNT0_3_UPPER

Register Reset Type	Reset Values	Reset Short Name	Reset Mode	Note
RESET_TYPE_4	09090909_H	RESET_TYPE_4		

Upper Counter Trigger Level Channel 4 to 7

ADC2_CNT4_7_UPPER	Offset	Reset Value
Upper Counter Trigger Level Channel 4 to 7	$A8_H$	see Table 408

31 29	28 27	26 24	23 21	20 19	18 16
RES	HYST_UP_CH7	CNT_UP_CH7	RES	HYST_UP_CH6	CNT_UP_CH6
r	rw	rw	r	rw	rw

15 13	12 11	10 8	7 5	4 3	2 0
RES	HYST_UP_CH5	CNT_UP_CH5	RES	HYST_UP_CH4	CNT_UP_CH4
r	rw	rw	r	rw	rw

Field	Bits	Type	Description
RES	31:29	r	**Reserved** Always read as 0
HYST_UP_CH7	28:27	rw	**Channel 7 upper hysteresis** *Note: this bits are dedicated for future use. They are always read as 0.* 0_H **HYSTOFF** hysteresis switched off 1_H **HYST4** hysteresis = 4 2_H **HYST8** hysteresis = 8 3_H **HYST16** hysteresis = 16
CNT_UP_CH7	26:24	rw	**Upper timer trigger threshold channel 7** *Note: this bits are dedicated for future use. They are always read as 0.* 0_H 1 measurement 1_H 2 measurements 2_H 4 measurements 3_H 8 measurements 4_H 16 measurements 5_H 32 measurements 6_H 63 measurements 7_H 63 measurements
RES	23:21	r	**Reserved** Always read as 0
HYST_UP_CH6	20:19	rw	**Channel 6 upper hysteresis** 0_H **HYSTOFF** hysteresis switched off 1_H **HYST4** hysteresis = 4 2_H **HYST8** hysteresis = 8 3_H **HYST16** hysteresis = 16

Field	Bits	Type	Description
CNT_UP_CH6	18:16	rw	**Upper timer trigger threshold channel 6** 0_H 1 measurement 1_H 2 measurements 2_H 4 measurements 3_H 8 measurements 4_H 16 measurements 5_H 32 measurements 6_H 63 measurements 7_H 63 measurements
RES	15:13	r	**Reserved** Always read as 0
HYST_UP_CH5	12:11	rw	**Channel 5 upper hysteresis** 0_H **HYSTOFF** hysteresis switched off 1_H **HYST4** hysteresis = 4 2_H **HYST8** hysteresis = 8 3_H **HYST16** hysteresis = 16
CNT_UP_CH5	10:8	rw	**Upper timer trigger threshold channel 5** 0_H 1 measurement 1_H 2 measurements 2_H 4 measurements 3_H 8 measurements 4_H 16 measurements 5_H 32 measurements 6_H 63 measurements 7_H 63 measurements
RES	7:5	r	**Reserved** Always read as 0
HYST_UP_CH4	4:3	rw	**Channel 4 upper hysteresis** 0_H **HYSTOFF** hysteresis switched off 1_H **HYST4** hysteresis = 4 2_H **HYST8** hysteresis = 8 3_H **HYST16** hysteresis = 16
CNT_UP_CH4	2:0	rw	**Upper timer trigger threshold channel 4** 0_H 1 measurement 1_H 2 measurements 2_H 4 measurements 3_H 8 measurements 4_H 16 measurements 5_H 32 measurements 6_H 63 measurements 7_H 63 measurements

Table 408 RESET of ADC2_CNT4_7_UPPER

Register Reset Type	Reset Values	Reset Short Name	Reset Mode	Note
RESET_TYPE_4	$000B0909_H$	RESET_TYPE_4		

Lower Comparator Trigger Level Channel 0 - 3

ADC2_TH0_3_LOWER	Offset	Reset Value
Lower Comparator Trigger Level Channel 0 -3	80_H	see Table 409

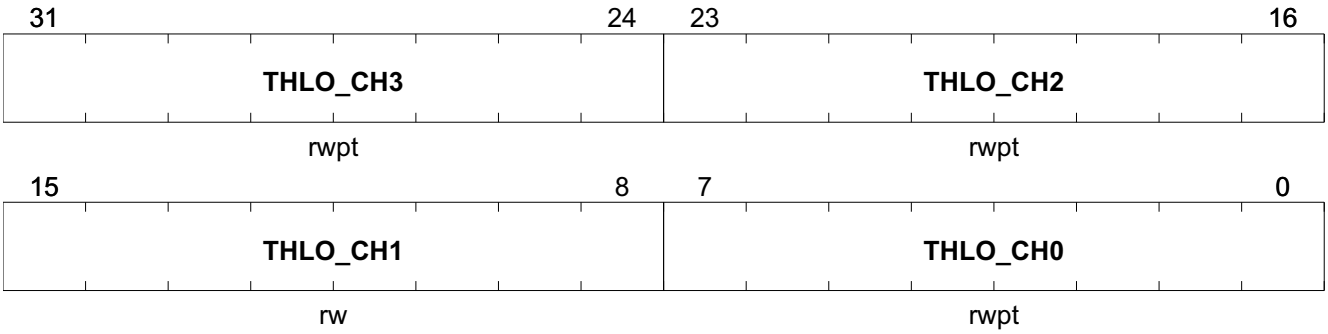

Field	Bits	Type	Description
THLO_CH3	31:24	rwpt	**Channel 3 lower trigger level** 00_H Min. threshold value FF_H Max. threshold value
THLO_CH2	23:16	rwpt	**Channel 2 lower trigger level** 00_H Min. threshold value FF_H Max. threshold value
THLO_CH1	15:8	rw	**Channel 1 lower trigger level** 00_H Min. threshold value FF_H Max. threshold value
THLO_CH0	7:0	rwpt	**Channel 0 lower trigger level** 00_H Min. threshold value FF_H Max. threshold value

Table 409 RESET of ADC2_TH0_3_LOWER

Register Reset Type	Reset Values	Reset Short Name	Reset Mode	Note
RESET_TYPE_4	$9D6FBF25_H$	RESET_TYPE_4		

Lower Comparator Trigger Level Channel 4 to 7

ADC2_TH4_7_LOWER	Offset	Reset Value
Lower Comparator Trigger Level Channel 4 to 7	84_H	see Table 410

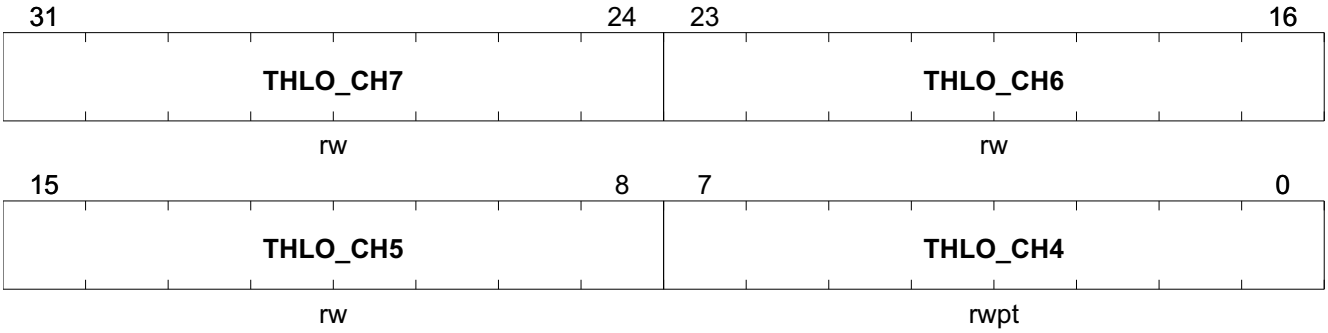

Field	Bits	Type	Description
THLO_CH7	31:24	rw	**Channel 7 lower trigger level** *Note: this bits are dedicated for future use. They are always read as 0.* 00_H Min. threshold value FF_H Max. threshold value
THLO_CH6	23:16	rw	**Channel 6 lower trigger level** 00_H Min. threshold value FF_H Max. threshold value
THLO_CH5	15:8	rw	**Channel 5 lower trigger level** 00_H Min. threshold value FF_H Max. threshold value
THLO_CH4	7:0	rwpt	**Channel 4 lower trigger level** 00_H Min. threshold value FF_H Max. threshold value

Table 410 RESET of ADC2_TH4_7_LOWER

Register Reset Type	Reset Values	Reset Short Name	Reset Mode	Note
RESET_TYPE_4	$00C8D4D4_H$	RESET_TYPE_4		

Lower Counter Trigger Level Channel 0 - 3

ADC2_CNT0_3_LOWER	Offset	Reset Value
Lower Counter Trigger Level Channel 0 - 3	98_H	see Table 411

31 29	28 27	26 24	23 21	20 19	18 16
RES	HYST_LO_CH3	CNT_LO_CH3	RES	HYST_LO_CH2	CNT_LO_CH2
r	rw	rw	r	rw	rw

15 13	12 11	10 8	7 5	4 3	2 0
RES	HYST_LO_CH1	CNT_LO_CH1	RES	HYST_LO_CH0	CNT_LO_CH0
r	rw	rw	r	rw	rw

Field	Bits	Type	Description
RES	31:29	r	**Reserved** Always read as 0
HYST_LO_CH3	28:27	rw	**Channel 3 lower hysteresis** 0_H **HYSTOFF** hysteresis switched off 1_H **HYST4** hysteresis = 4 2_H **HYST8** hysteresis = 8 3_H **HYST16** hysteresis = 16
CNT_LO_CH3	26:24	rw	**Lower timer trigger threshold channel 3** 0_H 1 measurement 1_H 2 measurements 2_H 4 measurements 3_H 8 measurements 4_H 16 measurements 5_H 32 measurements 6_H 63 measurements 7_H 63 measurements
RES	23:21	r	**Reserved** Always read as 0
HYST_LO_CH2	20:19	rw	**Channel 2 lower hysteresis** 0_H **HYSTOFF** hysteresis switched off 1_H **HYST4** hysteresis = 4 2_H **HYST8** hysteresis = 8 3_H **HYST16** hysteresis = 16

Field	Bits	Type	Description
CNT_LO_CH2	18:16	rw	**Lower timer trigger threshold channel 2** 0_H 1 measurement 1_H 2 measurements 2_H 4 measurements 3_H 8 measurements 4_H 16 measurements 5_H 32 measurements 6_H 63 measurements 7_H 63 measurements
RES	15:13	r	**Reserved** Always read as 0
HYST_LO_CH1	12:11	rw	**Channel 1 lower hysteresis** 0_H **HYSTOFF** hysteresis switched off 1_H **HYST4** hysteresis = 4 2_H **HYST8** hysteresis = 8 3_H **HYST16** hysteresis = 16
CNT_LO_CH1	10:8	rw	**Lower timer trigger threshold channel 1** 0_H 1 measurement 1_H 2 measurements 2_H 4 measurements 3_H 8 measurements 4_H 16 measurements 5_H 32 measurements 6_H 63 measurements 7_H 63 measurements
RES	7:5	r	**Reserved** Always read as 0
HYST_LO_CH0	4:3	rw	**Channel 0 lower hysteresis** 0_H **HYSTOFF** hysteresis switched off 1_H **HYST4** hysteresis = 4 2_H **HYST8** hysteresis = 8 3_H **HYST16** hysteresis = 16
CNT_LO_CH0	2:0	rw	**Lower timer trigger threshold channel 0** 0_H 1 measurement 1_H 2 measurements 2_H 4 measurements 3_H 8 measurements 4_H 16 measurements 5_H 32 measurements 6_H 63 measurements 7_H 63 measurements

Table 411 RESET of ADC2_CNT0_3_LOWER

Register Reset Type	Reset Values	Reset Short Name	Reset Mode	Note
RESET_TYPE_4	09090909_H	RESET_TYPE_4		

Lower Counter Trigger Level Channel 4 to 7

ADC2_CNT4_7_LOWER	Offset	Reset Value
Lower Counter Trigger Level Channel 4 to 7	$9C_H$	see Table 412

31 29	28 27	26 24	23 21	20 19	18 16
RES	HYST_LO_CH7	CNT_LO_CH7	RES	HYST_LO_CH6	CNT_LO_CH6
r	rw	rw	r	rw	rw

15 13	12 11	10 8	7 5	4 3	2 0
RES	HYST_LO_CH5	CNT_LO_CH5	RES	HYST_LO_CH4	CNT_LO_CH4
r	rw	rw	r	rw	rw

Field	Bits	Type	Description
RES	31:29	r	**Reserved** Always read as 0
HYST_LO_CH7	28:27	rw	**Channel 6 lower hysteresis** *Note: this bits are dedicated for future use. They are always read as 0.* 0_H **HYSTOFF** hysteresis switched off 1_H **HYST4** hysteresis = 4 2_H **HYST8** hysteresis = 8 3_H **HYST16** hysteresis = 16
CNT_LO_CH7	26:24	rw	**Lower timer trigger threshold channel 6** *Note: this bits are dedicated for future use. They are always read as 0.* 0_H 1 measurement 1_H 2 measurements 2_H 4 measurements 3_H 8 measurements 4_H 16 measurements 5_H 32 measurements 6_H 63 measurements 7_H 63 measurements
RES	23:21	r	**Reserved** Always read as 0
HYST_LO_CH6	20:19	rw	**Channel 6 lower hysteresis** 0_H **HYSTOFF** hysteresis switched off 1_H **HYST4** hysteresis = 4 2_H **HYST8** hysteresis = 8 3_H **HYST16** hysteresis = 16

Field	Bits	Type	Description
CNT_LO_CH6	18:16	rw	**Lower timer trigger threshold channel 6** 0_H 1 measurement 1_H 2 measurements 2_H 4 measurements 3_H 8 measurements 4_H 16 measurements 5_H 32 measurements 6_H 63 measurements 7_H 63 measurements
RES	15:13	r	**Reserved** Always read as 0
HYST_LO_CH5	12:11	rw	**Channel 5 lower hysteresis** 0_H **HYSTOFF** hysteresis switched off 1_H **HYST4** hysteresis = 4 2_H **HYST8** hysteresis = 8 3_H **HYST16** hysteresis = 16
CNT_LO_CH5	10:8	rw	**Lower timer trigger threshold channel 5** 0_H 1 measurement 1_H 2 measurements 2_H 4 measurements 3_H 8 measurements 4_H 16 measurements 5_H 32 measurements 6_H 63 measurements 7_H 63 measurements
RES	7:5	r	**Reserved** Always read as 0
HYST_LO_CH4	4:3	rw	**Channel 4 lower hysteresis** 0_H **HYSTOFF** hysteresis switched off 1_H **HYST4** hysteresis = 4 2_H **HYST8** hysteresis = 8 3_H **HYST16** hysteresis = 16
CNT_LO_CH4	2:0	rw	**Lower timer trigger threshold channel 4** 0_H 1 measurement 1_H 2 measurements 2_H 4 measurements 3_H 8 measurements 4_H 16 measurements 5_H 32 measurements 6_H 63 measurements 7_H 63 measurements

Table 412 RESET of ADC2_CNT4_7_LOWER

Register Reset Type	Reset Values	Reset Short Name	Reset Mode	Note
RESET_TYPE_4	$000B0909_H$	RESET_TYPE_4		

23.8 Start-up Behavior after Reset

After the end of a reset phase the measurement sources and the post-processing units need some time for settling. In order to avoid undesired triggering of interrupts until the measurement signal acquisition is in a steady state, the status signals are forced to zero during the start-up phase.

The end of the start-up phase is indicated by the ready signal MI_RDY.

Measurement Core start-up procedure: the startup time of the complete signal chain are 2200 EoC cycles. The IIR-filter coefficient is set to C=2^-1 (fastest response time).

During the startup phase, the DPP will use SQ=11_1111_1111, regardless of the sequence registers configuration.

23.9 Postprocessing Default Values

The following table shows the assigned measurements of the particular channels and the reset default values which read from FW during power-up. Since the channels 6-9 of the unit are exclusively used for internal measurements, they can only be partly accessed by the application software.

Table 413 Channel allocation and postprocessing default settings (effective after reset)

Channel#	Name	Function	MMODE[1]	FILTCOEFF[2]		Threshold digital[3]	Threshold analog	Hysteresis[4]	Counters[5]
Ch. 0	VS	VS supply voltage	0	1	upper	$E8_H$	28.08V	1	1
					lower	25_H	4.43V	1	1
Ch. 1	VDDEXT	5V supply voltage for external	0	1	upper	$E9_H$	5.42V	1	1
					lower	BF_H	4.44V	1	1
Ch. 2	VDDP	5V port supply voltage	0	1	upper	$E9_H$	5.42V	1	1
					lower	$6F_H$	2.58V	1	1
Ch. 3	Vbg	measures 1V reference voltage from PMU	0	1	upper	AF_H	1.10V	1	1
					lower	$8F_H$	0.90V	1	1
Ch. 4	VDDC	1.5V core supply voltage	0	1	upper	FB_H	1.58V	1	1
					lower	$D4_H$	1.33V	1	1
Ch. 5	TEMP_LS	temperature lowsides	2	1	upper	DD_H	180°C	1	1
					lower	CF_H	151°C	1	1
Ch. 6	TEMP_Central	temperature central	2	1	upper	DD_H	180°C	1	3
					lower	$C2_H$	124°C	1	3

1) Register MMODE0_7; 0 = range control, 1 = UV, 2 = OV
2) Register FILTCOEFF0_7; 0 = 1/2, 1 = 1/4, 2 = 1/8, 3 = 1/16
3) Bitfield THUP_CHn / THLO_CHn
4) Bitfield HYST_UP_CHn / HYST_LO_CHn; 0 = hyst off, 1 = hyst 4, 2 = hyst 8, 3 = hyst 16
5) Bitfield CNT_UP_CHn / CNT_LO_CHn; 0 = 1 meas., 1 = 2 meas., 2 = 4 meas., 3 = 8 meas.

24 10-Bit Analog Digital Converter (ADC1)

24.1 Features

The basic function of this block is the digital postprocessing of several analog digitized measurement signals by means of filtering, level comparison and interrupt generation. The measurement postprocessing block is built of twelve identical channel units attached to the outputs of the 13-channel 10-bit ADC. It processes twelve channels, where the channel sequence and prioritization is programmable within a wide range.

Functional Features

- 10 Bit SAR ADC with conversion time of 17 clock cycles
- Programmable clock divider for sequencer and ADC
- 12 individually programmable channels (ch0..ch11):
  - 6 or 7 (product variant dependant) HV Channels: VS, VBAT_SENSE, MON1...MON4 orMON5 (product variant dependant)
  - 5 or 6 (product variant dependant) LV Channels: P2.1, P2.2, P2.3, P2.6, P2.7(, P2.0)
- One additional channel, ch12, connected to P2.0 (product variant dependant). This channel is only programmable in software mode, no calibration and no digital postprocessing are available in this case.
- All channels are fully calibrated and user configurable
- Individually programmable channel prioritization scheme for digital postprocessing (dpp)
- Two independent filter stages with programmable low-pass and time filter characteristics for each channel
- Two channel configurations:
  - Programmable upper- and lower trigger thresholds comprising a fully programmable hysteresis
  - Two individually programmable trigger thresholds with limit hysteresis settings
- Individually programmable upper threshold and lower threshold interrupts and status for all channel thresholds
- Four additional differential channels (build with MON1 to MON4) with postprocessing and interrupt generation (product variant dependant, only TLE9845QX)
- ADC reference completely integrated

Note: In case the MONx should be evaluated by the ADC1, it is recommended to add 6.8nF capacitors close to the MONx pin of the device, in order to build an external RC filter to limit the bandwidth of the input signal.

24.2 Introduction

The basic function of this unit, is the digital signal processing of several analog digitized measurement signals by means of filtering, level comparison and interrupt generation. The Measurement Core module processes twelve channels in a quasi parallel process.

24.2.1 Block Diagram

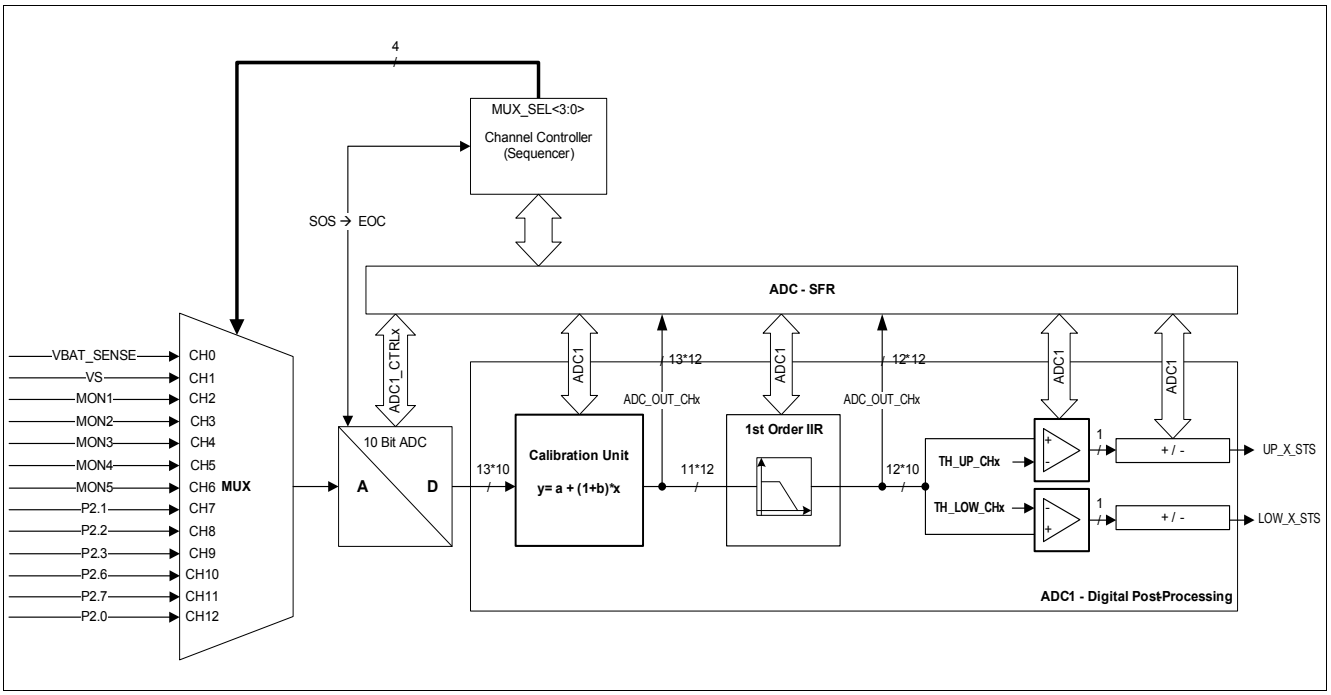

Figure 196 Module Block Diagram

As shown in the figure above, the ADC postprocessing consists of a channel controller (Sequencer), an 12 - channel demultiplexer and the signal processing block, which filters and compares the sampled ADC values for each channel individually. The channel control block controls the multiplexer sequencing on the analog side before the ADC and on the digital domain after the ADC. As described in the following section, the channel sequence can be controlled in a flexible way, which allows a certain degree of channel prioritization.

This capability can be used e.g. to set a higher priority to supply voltage channels compared to the other channel measurements. The Measurement Core Module offers additionally two different post-processing measurement modes for over-/undervoltage detection and for two-level threshold detection.

24.2.2 ADC1 Modes Overview

Usually the external register settings should only be changed during the start-up phase .

“Exceptional Interrupt Measurement”, a high priority channel is inserted into the current sequence. The current actual measurement is not destroyed

“Exceptional Sequence Measurement”, upon a hardware event event, a complete sequence is inserted after the current measurement is finished. The current sequence is interrupted by the exception sequence.

“Software Mode”, Sequencer and Exceptional Interrupt and Sequence Measurement is disabled, each measurement is triggered by software.

The threshold counter can be bypassed **ADC1_FILT_UP_CTRL** and **ADC1_FILT_LO_CTRL**

24.3 ADC1 - Core (10-Bit ADC)

24.3.1 Functional Description

The different sequencer modes are controlled by SFR Register:

- “Normal Sequencer Mode” described in the Chapter **Channel Controller**.
- “Exceptional Interrupt Measurement” (EIM), upon a hardware event , the channel programmed in **ADC1_CHx_EIM** is inserted after the current measurement is finished. Afterwards the current sequence will be continued with the next measurement from the current sequence. Up to max. 63 consecutive measurements are possible.
- “Exceptional Sequence Measurement“ (ESM), upon a hardware event , the sequence programmed in **ADC1_CHx_ESM** is inserted after the current measurement is finished. After the sequence (up to 12 measurements) exception is finished the next measurement from the interrupted sequence is selected. After the Exceptional Sequence Measurement is finished an interrupt is issued.
- “Software Mode”, in Software Mode the control of the Channel Controller (Sequencer) is disabled, instead the conversions are fully controlled by software. During Software Mode EIM and ESM hardware events are ignored.

Software Mode:

- Software mode can be entered in different ways
  - by writing one of the sequence registers SQn (e.g. to SQ_1[11:0]) to zero or setting the register **ADC1_CTRL3**.SW_MODE
  - by writing the Exceptional Sequence Measurement (**ADC1_CHx_ESM**) to zero and enable the Exceptional Sequence Measurement.
  - using Debug Suspend Mode
- In Software mode, the channel selection by the Sequencer is disabled. The entry of software mode is acknowledged in the **ADC1_SQ_FB**. After the software mode is entered, the conversion are controlled via **ADC1_CTRL_STS**.
- The Software Mode is left
  - when the maximum time is reached (maximum time specified in **ADC1_MAX_TIME**) or
  - when the sequence which started the software mode is reprogrammed with at least one channel set in its registers SQn (e.g. to SQ_1) not equal to zero
  - when the Exceptional Sequence Measurement (**ADC1_CHx_ESM**) is reprogrammed with at least one channel set
  - leaving Debug Suspend Mode

Important Note:

The ADC1 may give wrong results on channel 10 (P2.6) or channel 11 (P2.7), in case register SQ0_1.SQ0 == 0x000 (i.e.software mode is executed automatically)

Workaround option 1: Do not set register SQ0_1.SQ0 = 0x000. Reason: if at least one bit is set, the software mode is not started.

Workaround option 2: If SQ0_1.SQ0 = 0x000 needs to be used, make sure that MAX_TIME.MAX_TIME is >= 0x05.

Software Mode:

The default mode of the DPP1 is the sequencer mode. To change from this default mode to Software mode the corresponding flag ADC1.ADC1_CTRL2.SW_MODE. In Software Mode measurements are triggered by writing the **ADC1_CTRL_STS**.SOS bit. This bit is active as long as the conversion is in progress. The user polls the **ADC1_CTRL_STS**.EOC bit. Once this bit is '1' the conversion is finished and the EOC bit is cleared on read (rh). After the EOC bit is cleared a new conversion can be started **ADC1_CTRL_STS**.SOS.

Debug Suspend Mode:

During Debug Suspend Mode the Sequencer is stopped once the current measurement is finished (after the next EOC event) and Software Mode is entered. As long as the Debug Suspend Mode is active no measurements are performed by the Sequencer. Once the Debug Suspend Mode is left, the Sequencer continues immediately with the next pending measurement.
Measurements can be still triggered in Debug Suspend Mode/Software Mode. The maximum time of Software Mode is disabled in Suspend Mode. EIM and ESM events are ignored during Debug Suspend Mode.

The ADC timing is controlled by SFR Register

- Sample time adjustment described in the register **ADC1_CTRL3**.

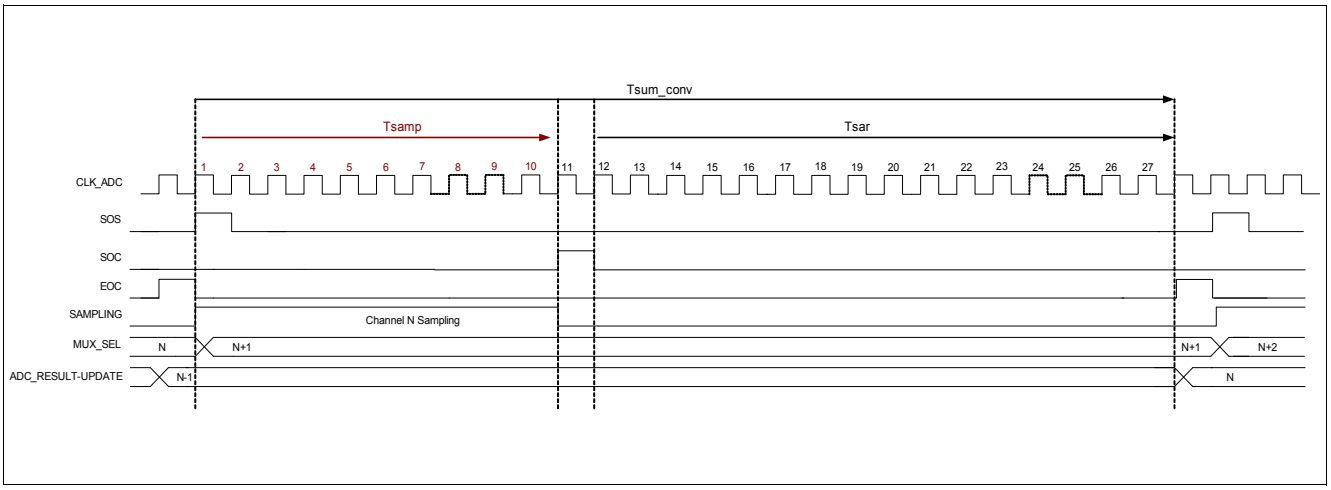

Figure 197 10 Bit ADC Timing - Single conversion

24.3.2 ADC1 Control and Status Registers

The ADC1 is fully controllable by the below listed special function registers in software mode.

Table 414 shows the module base addresses.

Table 414 Register Address Space

Module	Base Address	End Address	Note
ADC1	40004000_H	$40007FFF_H$	ADC1 - ADC-SAR10B

Table 415 Register Overview

Register Short Name	Register Long Name	Offset Address	Reset Value
ADC1 Control and Status Registers,			
ADC1_CTRL_STS	ADC1 Control and Status Register	00_H	$0000\ 0000_H$
ADC1_STATUS	ADC1 Status Register	BC_H	$0000\ 0000_H$

The registers are addressed wordwise.

ADC1 Control and Status Register

ADC1_CTRL_STS	Offset	Reset Value
ADC1 Control and Status Register	00_H	see Table 416

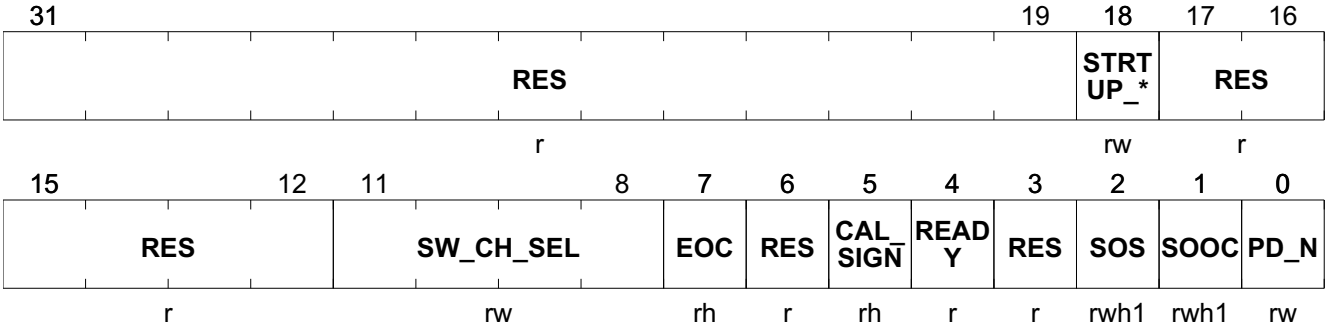

Field	Bits	Type	Description
RES	31:19	r	**Reserved** Always read as 0
STRTUP_DIS	18	rw	**DPP1 Startup Disable** 0_B **Startup Enable** DPP1 Startup enabled 1_B **Startup Disable** DPP1 Startup disable
RES	17:12	r	**Reserved** Always read as 0

Field	Bits	Type	Description
SW_CH_SEL	11:8	rw	**Channel for software mode** Other bit combinations are **reserved**, do not use. *Note: a rfu combination is automatically mapped to channel 12; If channel number and SOS are written within one register write cycle the channel number is not immediately effective for the triggered conversion by SOS.* 0000_B **CH0_EN** Channel 0 enable 0001_B **CH1_EN** Channel 1 enable 0010_B **CH2_EN** Channel 2 enable 0011_B **CH3_EN** Channel 3 enable 0100_B **CH4_EN** Channel 4 enable 0101_B **CH5_EN** Channel 5 enable 0110_B **CH6_EN** Channel 6 enable 0111_B **CH7_EN** Channel 7 enable 1000_B **CH8_EN** Channel 8 enable 1001_B **CH9_EN** Channel 9 enable 1010_B **CH10_EN** Channel 10 enable 1011_B **CH11_EN** Channel 11 enable 1100_B **CH12_EN** Channel 12 enable 1101_B **rfu** reserved for future use 1110_B **rfu** reserved for future use 1111_B **rfu** reserved for future use
EOC	7	rh	**ADC1 End of Conversion (software mode)** *Note: this flag is not only cleared by a read operation but also automatically be setting ADC1_SOS* 0_B **Pending** conversion still running 1_B **Finished** conversion has finished
RES	6	r	**Reserved** Always read as 0
CAL_SIGN	5	rh	**Output of Comparator to Steer Gain / Offset calibration**
READY	4	r	**HVADC Ready bit** 0_B **Not ready** Module in power down or in init phase 1_B **Ready** set automatically 5 ADC clock cycles after module is enabled
RES	3	r	**Reserved** Always read as 0
SOS	2	rwh1	**ADC1 Start of Sampling/Conversion (software mode)** *Note: Bit is set by software to start sampling and conversion and it is cleared by hardware once the conversion is finished. ADC1_SOS can be only written if the DPP is in software mode.* 0_B **Disable** no conversion is started 1_B **Enable** conversion is started

Field	Bits	Type	Description
SOOC	1	rwh1	**ADC1 Start of Offset Calibration (software mode)** *Note: Bit is set by software to start calibration and it is cleared by hardware once the calibration is finished ADC1_SOOC can be only written if the DPP is in software mode.* 0_B **Disable** no offset calibration is started 1_B **Enable** offset calibration is started
PD_N	0	rw	**ADC1 Power Down Signal** 0_B **POWER DOWN** ADC1 is powered down 1_B **ACTIVE** ADC1 is switched on

Table 416 RESET of ADC1_CTRL_STS

Register Reset Type	Reset Values	Reset Short Name	Reset Mode	Note
RESET_TYPE_3	$0000\ 0000_H$	RESET_TYPE_3		

ADC1 Status Register

ADC1_STATUS	Offset	Reset Value
ADC1 Status Register	BC_H	see Table 417

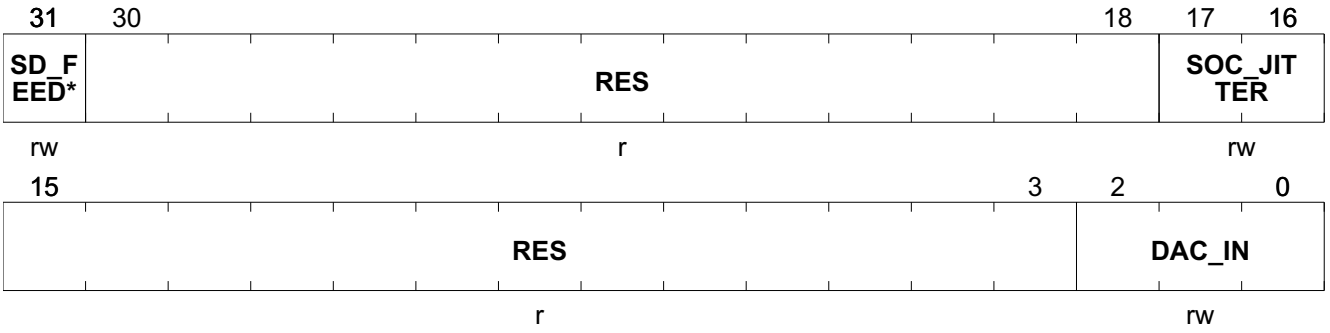

Field	Bits	Type	Description
SD_FEEDB_ON	31	rw	**Sigma Delta Feedback Loop** 0_B **Disable** 1_B **Enable**
RES	30:18	r	**Reserved** Always read as 0
SOC_JITTER	17:16	rw	**Programs Soc Clock Jitter** 00_B **0n** 01_B **3.5n** 10_B **5.5n** 11_B **8n**
RES	15:3	r	**Reserved** Always read as 0
DAC_IN	2:0	rw	**Programs the 2-bit DAC for functional test** 000_B **0** added LSB 001_B **1** added LSB 010_B **2** added LSB 011_B **3** added LSB 100_B **4** .....

Table 417 RESET of ADC1_STATUS

Register Reset Type	Reset Values	Reset Short Name	Reset Mode	Note
RESET_TYPE_4	$0000\ 0000_H$	RESET_TYPE_4		

24.4 ADC - Trigger Unit

The DPP Unit provides also a trigger block. This trigger block provides the following functionality:

- “Exceptional Interrupt Measurement” (EIM), upon hardware event , the channel programmed in **ADC1_CHx_EIM** is inserted after the current measurement is finished. Afterwards the current sequence will be continued with the next measurement from the current sequence.
- “Exceptional Sequence Measurement“ (ESM), upon hardware event , the sequence programmed in **ADC1_CHx_ESM** is inserted after the current measurement is finished. After the sequence (up to 12 measurements) exception is finished the next measurement from the interrupted sequence is selected. After the Exceptional Sequence Measurement is finished an interrupt is issued.
- “Software Mode”, in Software Mode the control of the Channel Controller (Sequencer) is disabled, instead the conversions are fully controlled by software. During Software Mode EIM and ESM hardware events are ignored.

24.5 Channel Controller

24.5.1 Functional Description

The task of each channel controller is a prioritization of the individual measurement channels. The sequencing scheme is illustrated in the example of following table and can be programmed individually for measurement unit.

Table 418 Measurement channel sequence definition example (used as default sequence)

Measurement channel n	MSB CH11	CH10	CH9	CH8	CH7	CH6	CH5	CH4	CH3	CH2	CH1	LSB CH0
Registers SQ_{0_1}[11:0]	1	1	1	1	1	1	1	1	1	1	1	1
Registers SQ_{0_1}[27:16]	0	0	0	0	0	0	1	1	1	1	0	0
Registers SQ_{2_3}[11:0]	1	0	0	0	0	0	0	0	0	0	0	0
Registers SQ_{2_3}[27:16]	1	1	1	1	1	1	1	1	1	1	1	1
Registers SQ_{4_5}[11:0]	0	0	0	0	0	0	0	0	0	0	0	0
Registers SQ_{4_5}[27:16]	0	0	0	0	0	0	0	0	0	0	0	0
Registers SQ_{6_7}[11:0]	1	1	1	1	1	1	1	1	1	1	1	1
Registers SQ_{6_7}[27:16]	0	0	0	0	0	0	0	0	0	0	0	0
Registers SQ_{8_9}[11:0]	0	0	0	0	0	0	0	0	0	0	0	0
Registers SQ_{8_9}[27:16]	1	1	1	1	1	1	1	1	1	1	1	1
Registers SQ_{10_11}[11:0]	0	0	0	0	0	0	0	0	0	0	0	0
Registers SQ_{10_11}[27:16]	0	0	0	0	0	0	0	0	0	0	0	0

The sequence registers SQ_n define the time sequence of the measurement channels by the following rules:

- The sequence registers define the measurement sequence and are evaluated from register 1 to 12 and for each register from MSB to LSB, which defines a max. overall measurement periodicity of 144 sampling and conversion cycles.
- If the individual bit in the sequence register is set to ’1’, the corresponding channel is measured.
- If the individual bit in the sequence register is not set, this measurement phase is skipped.

In the upper example, the resulting channel sequence is defined as:

CH11, CH10, CH9, CH8, CH7, CH6, CH5, CH4, CH3,....., CH5, CH4, CH3, CH2, CH11, CH11

In TLE9844 Channels 0 - 11 can be fully programmed. The channels 0-11 are measured depending on the amount of ’1’ bits, written in the sequence registers. The following equations can be used to calculate the periodicity of the required channel measurement.

The overall measurement periodicity of all measurements in A/D conversion cycles is defined as:

$$\overline{N_{meas}} = \sum_{m=1}^{12}\left(\sum_{n=0}^{11} SQ_m[n]\right) \quad (25)$$

which results in 144 A/D conversion cycles. The average measurement periodicity of channel n in A/D conversion cycles is defined as

$$\overline{N_{meas_n}} = \frac{\left(\sum_{m=1}^{12} SQ_m[n]\right)}{\overline{T_{meas}}} \quad (26)$$

The timing of the analog MUX and the digital DEMUX is controlled by the channel controller accordingly. The analog MUX with sample and hold stage needs one clock cycle for channel switching and the ADC consumes, as default setting, 12 clock cycles for the sampling of the input voltage. The conversion time for a single channel measurement value is 17 clock cycles.

The minimum measurement periodicity, which can be achieved, by enabling only channel 1 in the sequence registers, depends on the MI_CLK frequency and is given by:

$$\overline{T_{meas_CH1_min}} = \frac{26}{f_{mi_clk}}$$

This following calculations include already the sampling time of ADC. If all programmable channels are enabled, the maximum periodicity is calculated: (27)

$$\overline{T_{meas_CH1_min}} = \frac{312}{f_{mi_clk}} \quad (28)$$

For a MI_CLK frequency of 24 MHz, the channel 1 is measured with min. 1.1 µs. The maximum update time of channel 1 with 24 MHz clock frequency is 10 µs. As mentioned before, this is calculated with the assumption, that all channels are enabled and channel1 is enabled in every sequence register. As a prerequisite for this calculation we take **ADC1_CTRL3** = 4 (sample period = 12 MI_CLK clock cycles).

24.5.2 Channel Controller Control Registers

The Channel Controller can fully be configured by the **SFR** Register listed in Table 419.

Table 419 Register Overview

Register Short Name	Register Long Name	Offset Address	Reset Value
Channel Controller Control Registers,			
ADC1_SQ_FB	Sequencer Feedback Register	04_H	0000 0000 000X XXXX 0XXX XXXX 0000 XXXX_B
ADC1_CHx_EIM	Channel Setting Bits for Exceptional Interrupt Measurement	08_H	0000 0000_H
ADC1_CHx_ESM	Channel Setting Bits for Exceptional Sequence Measurement	$0C_H$	0000 0000_H
ADC1_MAX_TIME	Maximum Time for Software Mode	10_H	0000 0000_H
ADC1_CTRL2	Measurement Unit 1 Control Register 2	14_H	0000 0000_H
ADC1_CTRL3	Measurement Unit 1 Control Register 3	18_H	0000 0401_H
ADC1_CTRL4	Measurement Unit 1 Control Register 4	38_H	0000 0000_H
ADC1_CTRL5	Measurement Unit 1 Control Register 5	$1C_H$	0000 0000_H
ADC1_SQ0_1	Measurement Unit 1 Channel Enable Bits for Cycle 0-1	20_H	0000 0000_H
ADC1_SQ2_3	Measurement Unit 1 Channel Enable Bits for Cycle 2-3	24_H	0000 0000_H
ADC1_SQ4_5	Measurement Unit 1 Channel Enable Bits for Cycle 4-5	28_H	0000 0000_H
ADC1_SQ6_7	Measurement Unit 1 Channel Enable Bits for Cycle 6-7	$2C_H$	0000 0000_H
ADC1_SQ8_9	Measurement Unit 1 Channel Enable Bits for Cycle 8-9	30_H	0000 0000_H
ADC1_SQ10_11	Measurement Unit 1 Channel Enable Bits for Cycle 10-11	34_H	0000 0000_H

The registers are addressed wordwise.

Measurement Unit 1 Control Register 2

This register is dedicated for controlling the calibration unit of the measurement core module. The respective channel calibration can be enabled or disabled by the bits listed below.

ADC1_CTRL2	Offset	Reset Value
Measurement Unit 1 Control Register 2	14_H	see Table 420

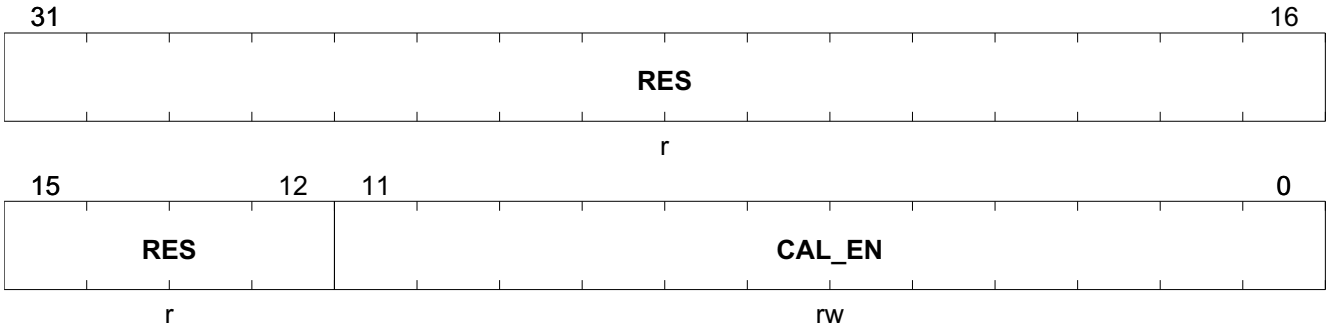

Field	Bits	Type	Description
RES	31:12	r	**Reserved** Always read as 0
CAL_EN	11:0	rw	**Calibration Enable for Channels 0 to 11** The following values can be ored: $0000\ 0000\ 0001_B$**CH0_EN** Channel 0 calibration enable $0000\ 0000\ 0010_B$**CH1_EN** Channel 1 calibration enable $0000\ 0000\ 0100_B$**CH2_EN** Channel 2 calibration enable $0000\ 0000\ 1000_B$**CH3_EN** Channel 3 calibration enable $0000\ 0001\ 0000_B$**CH4_EN** Channel 4 calibration enable $0000\ 0010\ 0000_B$**CH5_EN** Channel 5 calibration enable $0000\ 0100\ 0000_B$**CH6_EN** Channel 6 calibration enable $0000\ 1000\ 0000_B$**CH7_EN** Channel 7 calibration enable $0001\ 0000\ 0000_B$**CH8_EN** Channel 8 calibration enable $0010\ 0000\ 0000_B$**CH9_EN** Channel 9 calibration enable $0100\ 0000\ 0000_B$**CH10_EN** Channel 10 calibration enable $1000\ 0000\ 0000_B$**CH11_EN** Channel 11 calibration enable

Table 420 RESET of ADC1_CTRL2

Register Reset Type	Reset Values	Reset Short Name	Reset Mode	Note
RESET_TYPE_4	$0000\ 0000_H$	RESET_TYPE_4		

Measurement Unit 1 Control Register 3

ADC1_CTRL3	Offset	Reset Value
Measurement Unit 1 Control Register 3	18_H	see Table 421

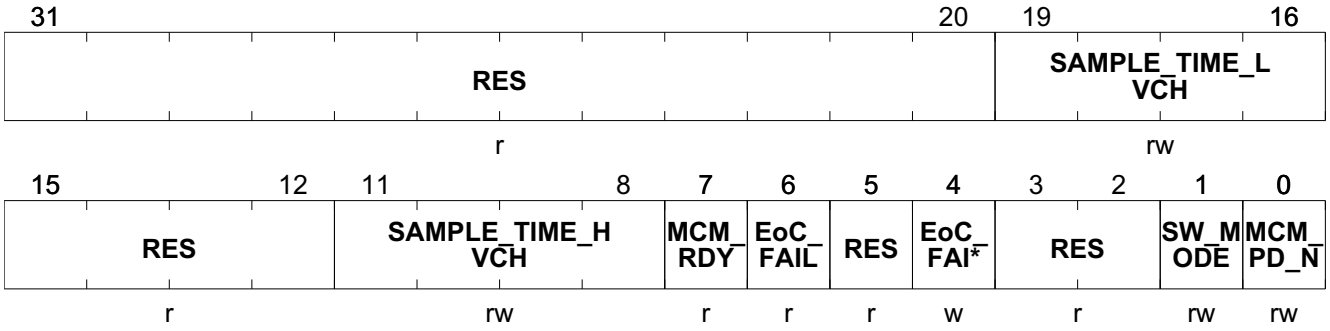

Field	Bits	Type	Description
RES	31:20	r	**Reserved** Always read as 0
SAMPLE_TIME_LVCH	19:16	rw	**Sample time of ADC1** *Note: the asolute sampling time of a Low Voltage Channel should not be choosen lower than 80 ns. Otherwise it is not ensured that the settling time of the input signal is long enough.* 0_H **MICLK4** 4 MI_CLK clock periods(default) 1_H **MICLK6** 6 MI_CLK clock periods 2_H **MICLK8** 8 MI_CLK clock periods 3_H **MICLK10** 10 MI_CLK clock periods 4_H **MICLK12** 12 MI_CLK clock periods 5_H **MICLK14** 14 MI_CLK clock periods 6_H **MICLK16** 16 MI_CLK clock periods 7_H **MICLK18** 18 MI_CLK clock periods 8_H **MICLK20** 20 MI_CLK clock periods 9_H **MICLK22** 22 MI_CLK clock periods A_H **MICLK12** 12 MI_CLK clock periods B_H **MICLK12** 12 MI_CLK clock periods C_H **MICLK12** 12 MI_CLK clock periods D_H **MICLK12** 12 MI_CLK clock periods E_H **MICLK12** 12 MI_CLK clock periods F_H **MICLK12** 12 MI_CLK clock periods
RES	15:12	r	**Reserved** Always read as 0

Field	Bits	Type	Description
SAMPLE_TIME_HVCH	11:8	rw	**Sample time of ADC1** *Note: the absolute sampling time of a High Voltage Channel should not be choosen lower than 2 us. Otherwise it is not ensured that the settling time of the input signal is long enough.* 0_H **MICLK4** 4 MI_CLK clock periods 1_H **MICLK6** 6 MI_CLK clock periods 2_H **MICLK8** 8 MI_CLK clock periods 3_H **MICLK10** 10 MI_CLK clock periods 4_H **MICLK12** 12 MI_CLK clock periods (default) 5_H **MICLK14** 14 MI_CLK clock periods 6_H **MICLK16** 16 MI_CLK clock periods 7_H **MICLK18** 18 MI_CLK clock periods 8_H **MICLK20** 20 MI_CLK clock periods 9_H **MICLK22** 22 MI_CLK clock periods A_H **MICLK4** 4 MI_CLK clock periods B_H **MICLK4** 4 MI_CLK clock periods C_H **MICLK4** 4 MI_CLK clock periods D_H **MICLK4** 4 MI_CLK clock periods E_H **MICLK4** 4 MI_CLK clock periods F_H **MICLK4** 4 MI_CLK clock periods
MCM_RDY	7	r	**Ready Signal for MCM[1] after Power On or Reset** 0_B **MCM Not Ready** Measurement Core Module in startup phase 1_B **MCM Ready** Measurement Core Module start-up phase finished
EoC_FAIL	6	r	**Fail of ADC End of Conversion Signal** 0_B **ADC EoC available** End of Conversion Signal was sent properly by ADC 1_B **ADC EoC not available** End of Conversion Signal was not sent properly by ADC
RES	5	r	**Reserved** Always read as 0
EoC_FAIL_CLR	4	w	**Fail of ADC End of Conversion Signal Clear** 0_B **ADC EoC Fail not clear** no clear of EoC_FAIL flag 1_B **ADC EoC Fail clear** Clear of EoC_FAIL flag
RES	3:2	r	**Reserved** Always read as 0
SW_MODE	1	rw	**SW Mode Enable** 0_B **Software Mode Disable** Sequencer running 1_B **Software Mode Enabled** Sequencer stopped
MCM_PD_N	0	rw	**Power Down Signal for MCM** 0_B **MCM Disabled** Measurement Core Module Disabled 1_B **MCM Enabled** Measurement Core Module Enabled

1) MCM = Measurement Core Module

Table 421 RESET of ADC1_CTRL3

Register Reset Type	Reset Values	Reset Short Name	Reset Mode	Note
RESET_TYPE_4	0000 0401_H	RESET_TYPE_4		

Measurement Unit 1 Control Register 4

ADC1_CTRL4	Offset	Reset Value
Measurement Unit 1 Control Register 4	38_H	see Table 422

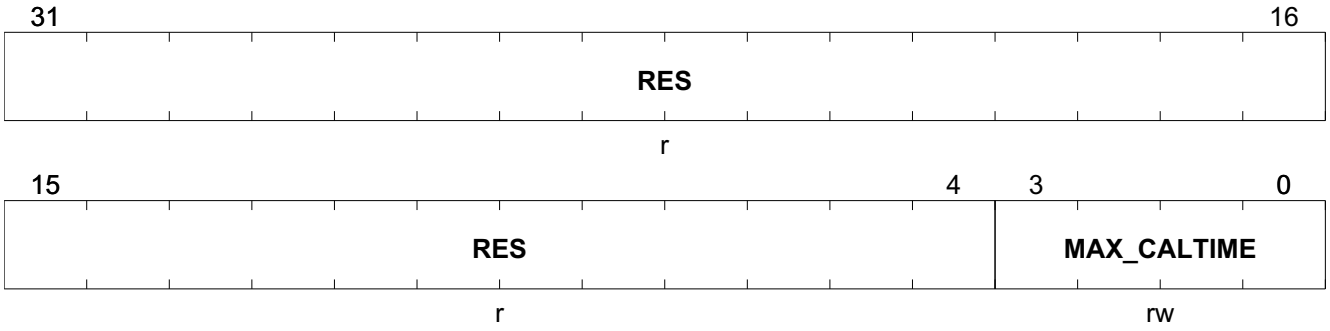

Field	Bits	Type	Description
RES	31:4	r	**Reserved** Always read as 0
MAX_CALTIME	3:0	rw	**Maximum ADC Calibration Time** Defines how often the ADC calibration is done within the sequencer cycle 0_H **1** Sequence 1_H **2** Sequences 2_H **3** Sequences 3_H **4** Sequences 4_H **5** Sequence 5_H **6** Sequences 6_H **7** Sequences 7_H **8** Sequences 8_H **9** Sequences 9_H **10** Sequences A_H **11** Sequences B_H **12.** Sequences C_H **13** Sequences D_H **14** Sequences E_H **15** Sequences F_H **16** Sequences

Table 422 RESET of ADC1_CTRL4

Register Reset Type	Reset Values	Reset Short Name	Reset Mode	Note
RESET_TYPE_4	$0000\ 0000_H$	RESET_TYPE_4		

Measurement Unit 1 Control Register 5

ADC1_CTRL5	Offset	Reset Value
Measurement Unit 1 Control Register 5	$1C_H$	see Table 423

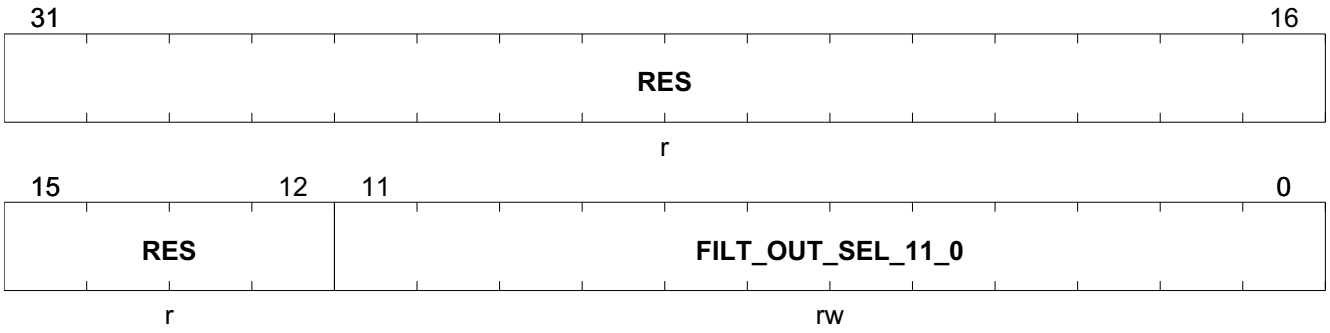

Field	Bits	Type	Description
RES	31:12	r	**Reserved** Always read as 0
FILT_OUT_SEL_11_0	11:0	rw	**Output Filter Selection for Channels 0 to 11** $0000\ 0000\ 0000_B$ **ADC1 Unfiltered Data can be monitored in the corresponding FILT_OUTx Registers** $0000\ 0000\ 0001_B$ **Channel 0 IIR Data enabled for FILT_OUT0 Register** $0000\ 0000\ 0010_B$ **Channel 1 IIR Data enabled for FILT_OUT1 Register** $0000\ 0000\ 0100_B$ **Channel 2 IIR Data enabled for FILT_OUT2 Register** $0000\ 0000\ 1000_B$ **Channel 3 IIR Data enabled for FILT_OUT3 Register** $0000\ 0001\ 0000_B$ **Channel 4 IIR Data enabled for FILT_OUT4 Register** $0000\ 0010\ 0000_B$ **Channel 5 IIR Data enabled for FILT_OUT5 Register** $0000\ 0100\ 0000_B$ **Channel 6 IIR Data enabled for FILT_OUT6 Register** $0000\ 1000\ 0000_B$ **Channel 7 IIR Data enabled for FILT_OUT7 Register** $0001\ 0000\ 0000_B$ **Channel 8 IIR Data enabled for FILT_OUT8 Register** $0010\ 0000\ 0000_B$ **Channel 9 IIR Data enabled for FILT_OUT9 Register** $0100\ 0000\ 0000_B$ **Channel 10 IIR Data enabled for FILT_OUT10 Register** $1000\ 0000\ 0000_B$ **Channel 11 IIR Data enabled for FILT_OUT11 Register** $1111\ 1111\ 1111_B$ **For Channels 11-0 IIR Data is enabled for FILT_OUTx Registers**

Table 423 RESET of ADC1_CTRL5

Register Reset Type	Reset Values	Reset Short Name	Reset Mode	Note
RESET_TYPE_4	$0000\ 0000_H$	RESET_TYPE_4		

Measurement Unit 1 Channel Enable Bits for Cycle 0 - 1

ADC1_SQ0_1	Offset	Reset Value
Measurement Unit 1 Channel Enable Bits for Cycle 0-1	20_H	see Table 424

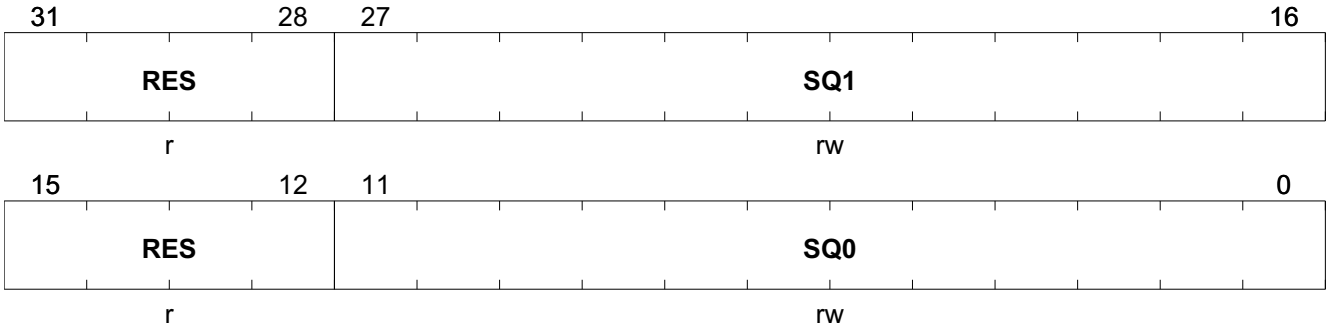

Field	Bits	Type	Description
RES	31:28	r	**Reserved** Always read as 0
SQ1	27:16	rw	**Sequence 1 channel enable** The following values can be ored: $0000\ 0000\ 0001_B$**CH0_EN** Channel 0 enable $0000\ 0000\ 0010_B$**CH1_EN** Channel 1 enable $0000\ 0000\ 0100_B$**CH2_EN** Channel 2 enable $0000\ 0000\ 1000_B$**CH3_EN** Channel 3 enable $0000\ 0001\ 0000_B$**CH4_EN** Channel 4 enable $0000\ 0010\ 0000_B$**CH5_EN** Channel 5 enable $0000\ 0100\ 0000_B$**CH6_EN** Channel 6 enable $0000\ 1000\ 0000_B$**CH7_EN** Channel 7 enable $0001\ 0000\ 0000_B$**CH8_EN** Channel 8 enable $0010\ 0000\ 0000_B$**CH9_EN** Channel 9 enable $0100\ 0000\ 0000_B$**CH10_EN** Channel 10 enable $1000\ 0000\ 0000_B$**CH11_EN** Channel 11 enable
RES	15:12	r	**Reserved** Always read as 0

Field	Bits	Type	Description
SQ0	11:0	rw	**Sequence 0 channel enable** The following values can be ored: $0000\ 0000\ 0001_B$**CH0_EN** Channel 0 enable $0000\ 0000\ 0010_B$**CH1_EN** Channel 1 enable $0000\ 0000\ 0100_B$**CH2_EN** Channel 2 enable $0000\ 0000\ 1000_B$**CH3_EN** Channel 3 enable $0000\ 0001\ 0000_B$**CH4_EN** Channel 4 enable $0000\ 0010\ 0000_B$**CH5_EN** Channel 5 enable $0000\ 0100\ 0000_B$**CH6_EN** Channel 6 enable $0000\ 1000\ 0000_B$**CH7_EN** Channel 7 enable $0001\ 0000\ 0000_B$**CH8_EN** Channel 8 enable $0010\ 0000\ 0000_B$**CH9_EN** Channel 9 enable $0100\ 0000\ 0000_B$**CH10_EN** Channel 10 enable $1000\ 0000\ 0000_B$**CH11_EN** Channel 11 enable

Table 424 RESET of ADC1_SQ0_1

Register Reset Type	Reset Values	Reset Short Name	Reset Mode	Note
RESET_TYPE_4	$0000\ 0000_H$	RESET_TYPE_4		

Measurement Unit 1 Channel Enable Bits for Cycle 2 - 3

ADC1_SQ2_3	Offset	Reset Value
Measurement Unit 1 Channel Enable Bits for Cycle 2-3	24_H	see Table 425

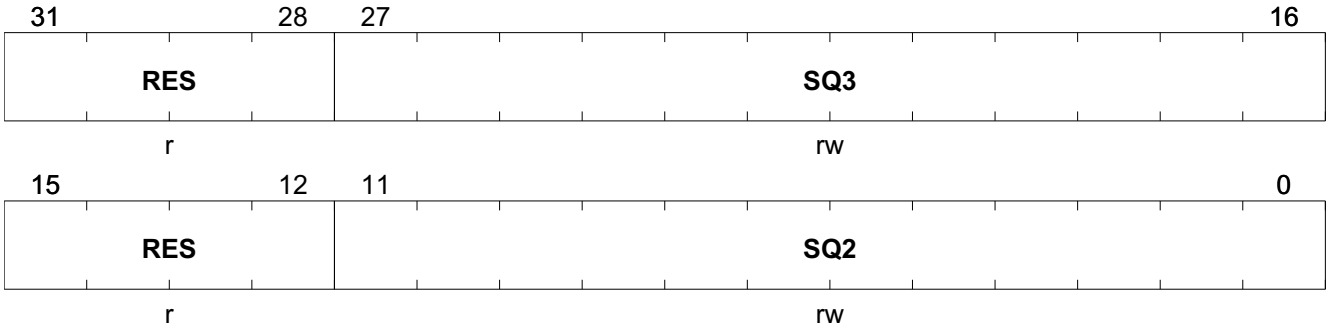

Field	Bits	Type	Description
RES	31:28	r	**Reserved** Always read as 0
SQ3	27:16	rw	**Sequence 3 channel enable** The following values can be ored: $0000\ 0000\ 0001_B$**CH0_EN** Channel 0 enable $0000\ 0000\ 0010_B$**CH1_EN** Channel 1 enable $0000\ 0000\ 0100_B$**CH2_EN** Channel 2 enable $0000\ 0000\ 1000_B$**CH3_EN** Channel 3 enable $0000\ 0001\ 0000_B$**CH4_EN** Channel 4 enable $0000\ 0010\ 0000_B$**CH5_EN** Channel 5 enable $0000\ 0100\ 0000_B$**CH6_EN** Channel 6 enable $0000\ 1000\ 0000_B$**CH7_EN** Channel 7 enable $0001\ 0000\ 0000_B$**CH8_EN** Channel 8 enable $0010\ 0000\ 0000_B$**CH9_EN** Channel 9 enable $0100\ 0000\ 0000_B$**CH10_EN** Channel 10 enable $1000\ 0000\ 0000_B$**CH11_EN** Channel 11 enable
RES	15:12	r	**Reserved** Always read as 0

Field	Bits	Type	Description
SQ2	11:0	rw	**Sequence 2 channel enable** The following values can be ored: 0000 0000 0001_B**CH0_EN** Channel 0 enable 0000 0000 0010_B**CH1_EN** Channel 1 enable 0000 0000 0100_B**CH2_EN** Channel 2 enable 0000 0000 1000_B**CH3_EN** Channel 3 enable 0000 0001 0000_B**CH4_EN** Channel 4 enable 0000 0010 0000_B**CH5_EN** Channel 5 enable 0000 0100 0000_B**CH6_EN** Channel 6 enable 0000 1000 0000_B**CH7_EN** Channel 7 enable 0001 0000 0000_B**CH8_EN** Channel 8 enable 0010 0000 0000_B**CH9_EN** Channel 9 enable 0100 0000 0000_B**CH10_EN** Channel 10 enable 1000 0000 0000_B**CH11_EN** Channel 11 enable

Table 425 RESET of ADC1_SQ2_3

Register Reset Type	Reset Values	Reset Short Name	Reset Mode	Note
RESET_TYPE_4	$0000\ 0000_H$	RESET_TYPE_4		

Measurement Unit 1 Channel Enable Bits for Cycle 4-5

ADC1_SQ4_5	Offset	Reset Value
Measurement Unit 1 Channel Enable Bits for Cycle 4-5	28_H	see Table 426

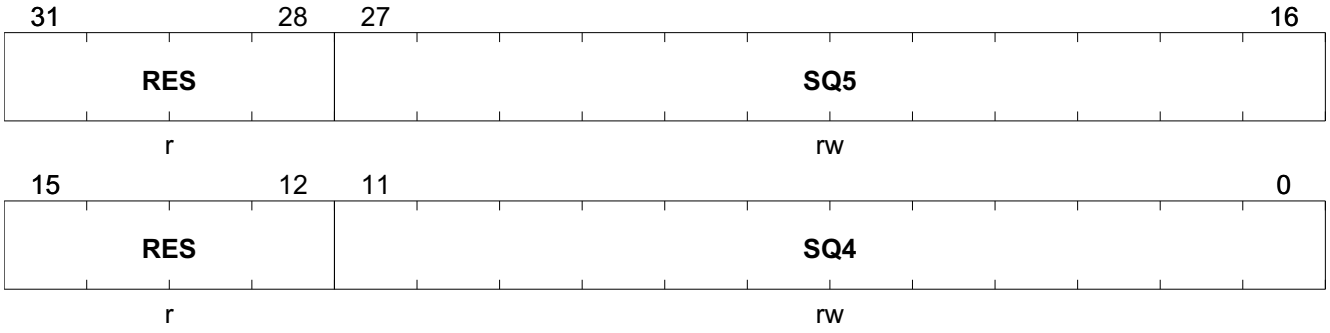

Field	Bits	Type	Description
RES	31:28	r	**Reserved** Always read as 0
SQ5	27:16	rw	**Sequence 5 channel enable** The following values can be ored: $0000\ 0000\ 0001_B$**CH0_EN** Channel 0 enable $0000\ 0000\ 0010_B$**CH1_EN** Channel 1 enable $0000\ 0000\ 0100_B$**CH2_EN** Channel 2 enable $0000\ 0000\ 1000_B$**CH3_EN** Channel 3 enable $0000\ 0001\ 0000_B$**CH4_EN** Channel 4 enable $0000\ 0010\ 0000_B$**CH5_EN** Channel 5 enable $0000\ 0100\ 0000_B$**CH6_EN** Channel 6 enable $0000\ 1000\ 0000_B$**CH7_EN** Channel 7 enable $0001\ 0000\ 0000_B$**CH8_EN** Channel 8 enable $0010\ 0000\ 0000_B$**CH9_EN** Channel 9 enable $0100\ 0000\ 0000_B$**CH10_EN** Channel 10 enable $1000\ 0000\ 0000_B$**CH11_EN** Channel 11 enable
RES	15:12	r	**Reserved** Always read as 0

Field	Bits	Type	Description
SQ4	11:0	rw	**Sequence 4 channel enable** The following values can be ored: 0000 0000 0001_B**CH0_EN** Channel 0 enable 0000 0000 0010_B**CH1_EN** Channel 1 enable 0000 0000 0100_B**CH2_EN** Channel 2 enable 0000 0000 1000_B**CH3_EN** Channel 3 enable 0000 0001 0000_B**CH4_EN** Channel 4 enable 0000 0010 0000_B**CH5_EN** Channel 5 enable 0000 0100 0000_B**CH6_EN** Channel 6 enable 0000 1000 0000_B**CH7_EN** Channel 7 enable 0001 0000 0000_B**CH8_EN** Channel 8 enable 0010 0000 0000_B**CH9_EN** Channel 9 enable 0100 0000 0000_B**CH10_EN** Channel 10 enable 1000 0000 0000_B**CH11_EN** Channel 11 enable

Table 426 RESET of ADC1_SQ4_5

Register Reset Type	Reset Values	Reset Short Name	Reset Mode	Note
RESET_TYPE_4	$0000\ 0000_H$	RESET_TYPE_4		

Measurement Unit 1 Channel Enable Bits for Cycle 6-7

ADC1_SQ6_7	Offset	Reset Value
Measurement Unit 1 Channel Enable Bits for Cycle 6-7	$2C_H$	see Table 427

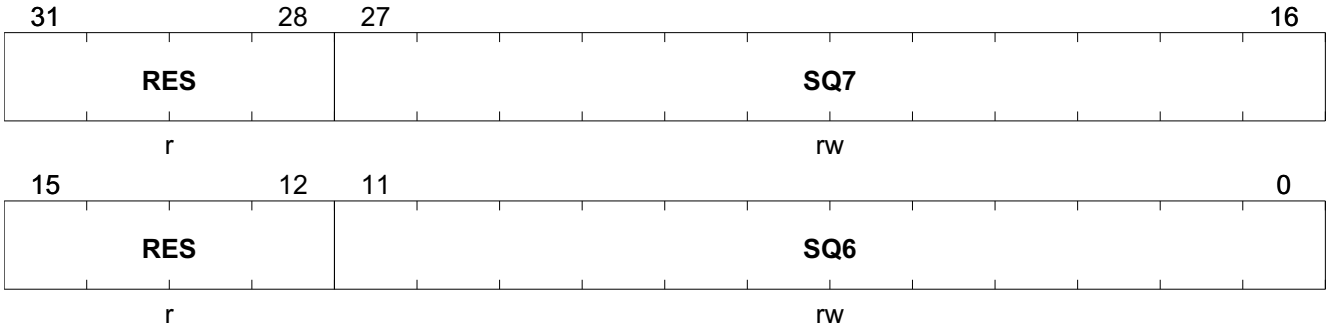

Field	Bits	Type	Description
RES	31:28	r	**Reserved** Always read as 0
SQ7	27:16	rw	**Sequence 7 channel enable** The following values can be ored: $0000\ 0000\ 0001_B$**CH0_EN** Channel 0 enable $0000\ 0000\ 0010_B$**CH1_EN** Channel 1 enable $0000\ 0000\ 0100_B$**CH2_EN** Channel 2 enable $0000\ 0000\ 1000_B$**CH3_EN** Channel 3 enable $0000\ 0001\ 0000_B$**CH4_EN** Channel 4 enable $0000\ 0010\ 0000_B$**CH5_EN** Channel 5 enable $0000\ 0100\ 0000_B$**CH6_EN** Channel 6 enable $0000\ 1000\ 0000_B$**CH7_EN** Channel 7 enable $0001\ 0000\ 0000_B$**CH8_EN** Channel 8 enable $0010\ 0000\ 0000_B$**CH9_EN** Channel 9 enable $0100\ 0000\ 0000_B$**CH10_EN** Channel 10 enable $1000\ 0000\ 0000_B$**CH11_EN** Channel 11 enable
RES	15:12	r	**Reserved** Always read as 0

Field	Bits	Type	Description
SQ6	11:0	rw	**Sequence 6 channel enable** The following values can be ored: 0000 0000 0001_B**CH0_EN** Channel 0 enable 0000 0000 0010_B**CH1_EN** Channel 1 enable 0000 0000 0100_B**CH2_EN** Channel 2 enable 0000 0000 1000_B**CH3_EN** Channel 3 enable 0000 0001 0000_B**CH4_EN** Channel 4 enable 0000 0010 0000_B**CH5_EN** Channel 5 enable 0000 0100 0000_B**CH6_EN** Channel 6 enable 0000 1000 0000_B**CH7_EN** Channel 7 enable 0001 0000 0000_B**CH8_EN** Channel 8 enable 0010 0000 0000_B**CH9_EN** Channel 9 enable 0100 0000 0000_B**CH10_EN** Channel 10 enable 1000 0000 0000_B**CH11_EN** Channel 11 enable

Table 427 RESET of ADC1_SQ6_7

Register Reset Type	Reset Values	Reset Short Name	Reset Mode	Note
RESET_TYPE_4	$0000\ 0000_H$	RESET_TYPE_4		

Measurement Unit 1 Channel Enable Bits for Cycle 8-9

ADC1_SQ8_9	Offset	Reset Value
Measurement Unit 1 Channel Enable Bits for Cycle 8-9	30_H	see Table 428

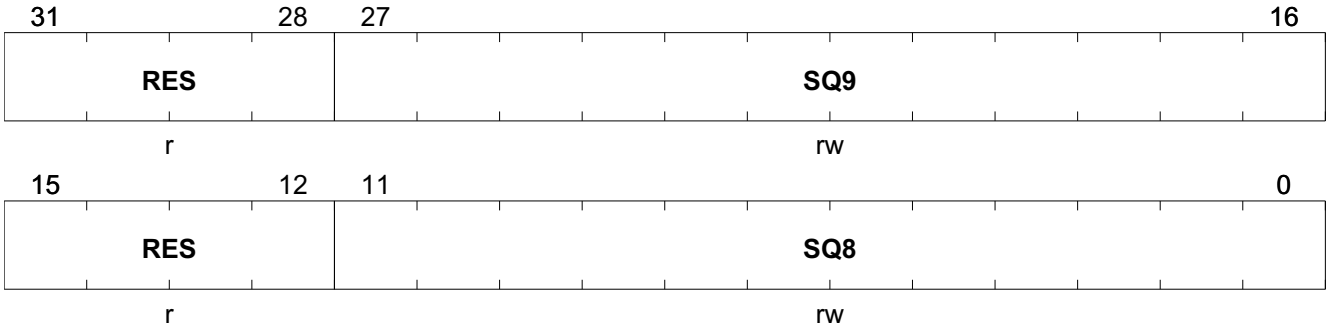

Field	Bits	Type	Description
RES	31:28	r	**Reserved** Always read as 0
SQ9	27:16	rw	**Sequence 9 channel enable** The following values can be ored: $0000\ 0000\ 0001_B$**CH0_EN** Channel 0 enable $0000\ 0000\ 0010_B$**CH1_EN** Channel 1 enable $0000\ 0000\ 0100_B$**CH2_EN** Channel 2 enable $0000\ 0000\ 1000_B$**CH3_EN** Channel 3 enable $0000\ 0001\ 0000_B$**CH4_EN** Channel 4 enable $0000\ 0010\ 0000_B$**CH5_EN** Channel 5 enable $0000\ 0100\ 0000_B$**CH6_EN** Channel 6 enable $0000\ 1000\ 0000_B$**CH7_EN** Channel 7 enable $0001\ 0000\ 0000_B$**CH8_EN** Channel 8 enable $0010\ 0000\ 0000_B$**CH9_EN** Channel 9 enable $0100\ 0000\ 0000_B$**CH10_EN** Channel 10 enable $1000\ 0000\ 0000_B$**CH11_EN** Channel 11 enable
RES	15:12	r	**Reserved** Always read as 0

Field	Bits	Type	Description
SQ8	11:0	rw	**Sequence 8 channel enable** The following values can be ored: 0000 0000 0001_B**CH0_EN** Channel 0 enable 0000 0000 0010_B**CH1_EN** Channel 1 enable 0000 0000 0100_B**CH2_EN** Channel 2 enable 0000 0000 1000_B**CH3_EN** Channel 3 enable 0000 0001 0000_B**CH4_EN** Channel 4 enable 0000 0010 0000_B**CH5_EN** Channel 5 enable 0000 0100 0000_B**CH6_EN** Channel 6 enable 0000 1000 0000_B**CH7_EN** Channel 7 enable 0001 0000 0000_B**CH8_EN** Channel 8 enable 0010 0000 0000_B**CH9_EN** Channel 9 enable 0100 0000 0000_B**CH10_EN** Channel 10 enable 1000 0000 0000_B**CH11_EN** Channel 11 enable

Table 428 RESET of ADC1_SQ8_9

Register Reset Type	Reset Values	Reset Short Name	Reset Mode	Note
RESET_TYPE_4	$0000\ 0000_H$	RESET_TYPE_4		

Measurement Unit 1 Channel Enable Bits for Cycle 10-11

ADC1_SQ10_11	Offset	Reset Value
Measurement Unit 1 Channel Enable Bits for Cycle 10-11	34_H	see Table 429

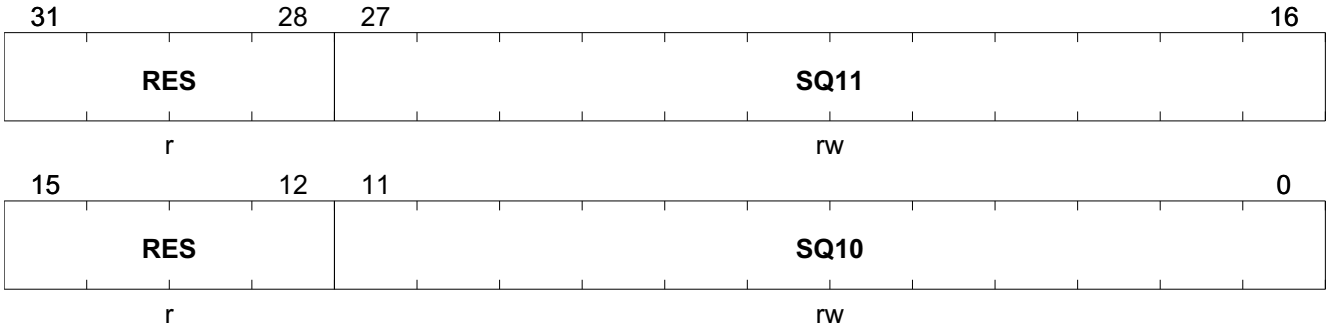

Field	Bits	Type	Description
RES	31:28	r	**Reserved** Always read as 0
SQ11	27:16	rw	**Sequence 11 channel enable** The following values can be ored: $0000\ 0000\ 0001_B$**CH0_EN** Channel 0 enable $0000\ 0000\ 0010_B$**CH1_EN** Channel 1 enable $0000\ 0000\ 0100_B$**CH2_EN** Channel 2 enable $0000\ 0000\ 1000_B$**CH3_EN** Channel 3 enable $0000\ 0001\ 0000_B$**CH4_EN** Channel 4 enable $0000\ 0010\ 0000_B$**CH5_EN** Channel 5 enable $0000\ 0100\ 0000_B$**CH6_EN** Channel 6 enable $0000\ 1000\ 0000_B$**CH7_EN** Channel 7 enable $0001\ 0000\ 0000_B$**CH8_EN** Channel 8 enable $0010\ 0000\ 0000_B$**CH9_EN** Channel 9 enable $0100\ 0000\ 0000_B$**CH10_EN** Channel 10 enable $1000\ 0000\ 0000_B$**CH11_EN** Channel 11 enable
RES	15:12	r	**Reserved** Always read as 0

Field	Bits	Type	Description
SQ10	11:0	rw	**Sequence 10 channel enable** The following values can be ored: 0000 0000 0001_B**CH0_EN** Channel 0 enable 0000 0000 0010_B**CH1_EN** Channel 1 enable 0000 0000 0100_B**CH2_EN** Channel 2 enable 0000 0000 1000_B**CH3_EN** Channel 3 enable 0000 0001 0000_B**CH4_EN** Channel 4 enable 0000 0010 0000_B**CH5_EN** Channel 5 enable 0000 0100 0000_B**CH6_EN** Channel 6 enable 0000 1000 0000_B**CH7_EN** Channel 7 enable 0001 0000 0000_B**CH8_EN** Channel 8 enable 0010 0000 0000_B**CH9_EN** Channel 9 enable 0100 0000 0000_B**CH10_EN** Channel 10 enable 1000 0000 0000_B**CH11_EN** Channel 11 enable

Table 429 RESET of ADC1_SQ10_11

Register Reset Type	Reset Values	Reset Short Name	Reset Mode	Note
RESET_TYPE_4	$0000\ 0000_H$	RESET_TYPE_4		

Sequencer Feedback Register

ADC1_SQ_FB	Offset	Reset Value
Sequencer Feedback Register	04_H	see Table 430

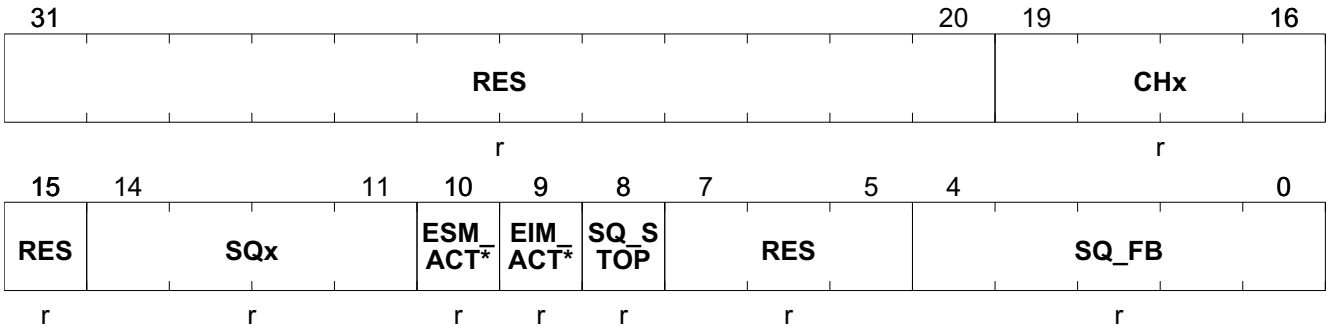

Field	Bits	Type	Description
RES	31:20	r	**Reserved** Always read as 0
CHx	19:16	r	**Current ADC1 Channel** Other bit combinations are **reserved**, do not use. 0000_B **CH0** Channel 0 enable 0001_B **CH1** Channel 1 enable 0010_B **CH2** Channel 2 enable 0011_B **CH3** Channel 3 enable 0100_B **CH4** Channel 4 enable 0101_B **CH5** Channel 5 enable 0110_B **CH6** Channel 6 enable 0111_B **CH7** Channel 7 enable 1000_B **CH8** Channel 8 enable 1001_B **CH9** Channel 9 enable 1010_B **CH10** Channel 10 enable 1011_B **CH11** Channel 11 enable
RES	15	r	**Reserved** Always read as 0

Field	Bits	Type	Description
SQx	14:11	r	**Current Active ADC1 Sequence** Other bit combinations are **reserved**, do not use. 0000_B **SQ0** Sequence 0 enable 0001_B **SQ1** Sequence 1 enable 0010_B **SQ2** Sequence 2 enable 0011_B **SQ3** Sequence 3 enable 0100_B **SQ4** Sequence 4 enable 0101_B **SQ5** Sequence 5 enable 0110_B **SQ6** Sequence 6 enable 0111_B **SQ7** Sequence 7 enable 1000_B **SQ8** Sequence 8 enable 1001_B **SQ9** Sequence 9 enable 1010_B **SQ10** Sequence 10 enable 1011_B **SQ11** Sequence 11 enable
ESM_ACTIVE	10	r	**ADC1 ESM active** *Note: this bit indicates an active or a pending sequence measurement; a pending measurement is signalled when EIM or Software Mode is selected (modes with higher priority).* 0_B **not active** ESM not active 1_B **active** ESM active
EIM_ACTIVE	9	r	**ADC1 EIM active** *Note: this bit indicates an active or a pending exception measurement; a pending measurement is signalled when Software Mode is selected (mode with higher priority).* 0_B **not active** EIM not active 1_B **active** EIM active
SQ_STOP	8	r	**ADC1 Sequencer Stop Signal for DPP** 0_B **DPP Running** Postprocessing Sequencer in running mode 1_B **DPP Stopped** Postprocessing Sequencer stopped / Software Mode entered
RES	7:5	r	**Reserved** Always read as 0

Field	Bits	Type	Description
SQ_FB	4:0	r	**Current Sequence that caused software mode** Other bit combinations are **n.u.**, not used. $0\ 0000_B$ **SQ0** Sequence 0 enable $0\ 0001_B$ **SQ1** Sequence 1 enable $0\ 0010_B$ **SQ2** Sequence 2 enable $0\ 0011_B$ **SQ3** Sequence 3 enable $0\ 0100_B$ **SQ4** Sequence 4 enable $0\ 0101_B$ **SQ5** Sequence 5 enable $0\ 0110_B$ **SQ6** Sequence 6 enable $0\ 0111_B$ **SQ7** Sequence 7 enable $0\ 1000_B$ **SQ8** Sequence 8 enable $0\ 1001_B$ **SQ9** Sequence 9 enable $0\ 1010_B$ **SQ10** Sequence 10 enable $0\ 1011_B$ **SQ11** Sequence 11 enable $1\ 1010_B$ **ESM** ESM $1\ 1011_B$ **rfu** $1\ 1100_B$ **SUSPEND** SW Mode per Flag $1\ 1101_B$ **SUSPEND** Debug Suspend Mode

Table 430 RESET of ADC1_SQ_FB

Register Reset Type	Reset Values	Reset Short Name	Reset Mode	Note
RESET_TYPE_4	$00XX\ XX0X_H$	RESET_TYPE_4		Exact reset value is:0000 0000 000X XXXX 0XXX XXXX 0000 XXXX(binary)

Channel Setting Bits for Exceptional Interrupt Measurement

ADC1_CHx_EIM	Offset	Reset Value
Channel Setting Bits for Exceptional Interrupt Measurement	08_H	see Table 431

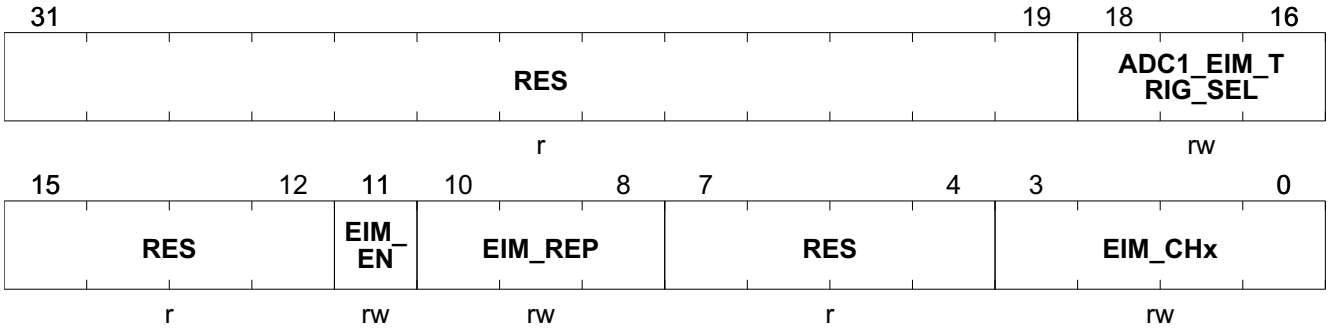

Field	Bits	Type	Description
RES	31:19	r	**Reserved** Always read as 0
ADC1_EIM_TRIG_SEL	18:16	rw	**Trigger selection for exceptional interrupt measurement (EIM)** 000_B **NONE** 001_B **COUT63** 010_B **GPT12_T6OUT** 011_B **GPT12_T3OUT** 100_B **T2** t2_adc_trigger 101_B **T21** t21_adc_trigger 110_B **RES** reserved 111_B **RES** reserved
RES	15:12	r	**Reserved** Always read as 0
EIM_EN	11	rw	**Exceptional interrupt measurement (EIM) Trigger Event enable** Always read as 0 0_B **DISABLE** start of EIM disabled 1_B **ENABLE** start of IEM enabled
EIM_REP	10:8	rw	**Repeat count for exceptional interrupt measurement (EIM)** 000_B **1** Measurements 001_B **2** Measurements 010_B **4** Measurements 011_B **8** Measurements 100_B **16** Measurements 101_B **32** Measurements 110_B **64** Measurements 111_B **128** Measurements
RES	7:4	r	**Reserved** Always read as 0

Field	Bits	Type	Description
EIM_CHx	3:0	rw	**Channel set for exceptional interrupt measurement (EIM)** Other bit combinations are **n.u.**, not used. *Note: selction of a rfu combination will be automatically mapped to CH11* 0000_B **CH0_EN** Channel 0 enable 0001_B **CH1_EN** Channel 1 enable 0010_B **CH2_EN** Channel 2 enable 0011_B **CH3_EN** Channel 3 enable 0100_B **CH4_EN** Channel 4 enable 0101_B **CH5_EN** Channel 5 enable 0110_B **CH6_EN** Channel 6 enable 0111_B **CH7_EN** Channel 7 enable 1000_B **CH8_EN** Channel 8 enable 1001_B **CH9_EN** Channel 9 enable 1010_B **CH10_EN** Channel 10 enable 1011_B **CH11_EN** Channel 11 enable 1100_B **rfu** reserved for future use

Table 431 RESET of ADC1_CHx_EIM

Register Reset Type	Reset Values	Reset Short Name	Reset Mode	Note
RESET_TYPE_4	$0000\ 0000_H$	RESET_TYPE_4		

Channel Setting Bits for Exceptional Sequence Measurement

ADC1_CHx_ESM	Offset	Reset Value
Channel Setting Bits for Exceptional Sequence Measurement	$0C_H$	see Table 432

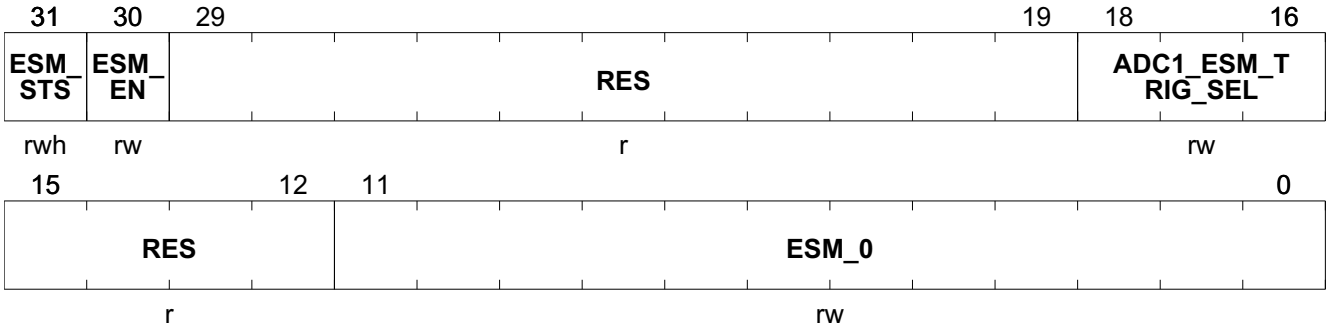

Field	Bits	Type	Description
ESM_STS	31	rwh	**Exceptional Sequence Measurement is finished** 0_B **not active** Exceptional Sequence Measurement not done 1_B **done** Exceptional Sequence Measurement done
ESM_EN	30	rw	**Enable for Exceptional Sequence Measurement Trigger Event** 0_B **Disable** start of ESM disabled 1_B **Enable** start of ESM enabled
RES	29:19	r	**Reserved** Always read as 0
ADC1_ESM_TRIG_SEL	18:16	rw	**Trigger selection for exceptional interrupt measurement (ESM)** 000_B **NONE** 001_B **COUT63** 010_B **GPT12_T6OUT** 011_B **GPT12_T3OUT** 100_B **T2** t2_adc_trigger 101_B **T21** t21_adc_trigger 110_B **RES** reserved 111_B **RES** reserved
RES	15:12	r	**Reserved** Always read as 0

Field	Bits	Type	Description
ESM_0	11:0	rw	**Channel Sequence for Exceptional Sequence Measurement (ESM)** The following values can be ored: 0000 0000 0001_B**CH0_EN** Channel 0 enable 0000 0000 0010_B**CH1_EN** Channel 1 enable 0000 0000 0100_B**CH2_EN** Channel 2 enable 0000 0000 1000_B**CH3_EN** Channel 3 enable 0000 0001 0000_B**CH4_EN** Channel 4 enable 0000 0010 0000_B**CH5_EN** Channel 5 enable 0000 0100 0000_B**CH6_EN** Channel 6 enable 0000 1000 0000_B**CH7_EN** Channel 7 enable 0001 0000 0000_B**CH8_EN** Channel 8 enable 0010 0000 0000_B**CH9_EN** Channel 9 enable 0100 0000 0000_B**CH10_EN** Channel 10 enable 1000 0000 0000_B**CH11_EN** Channel 11 enable

Table 432 RESET of ADC1_CHx_ESM

Register Reset Type	Reset Values	Reset Short Name	Reset Mode	Note
RESET_TYPE_4	$0000\ 0000_H$	RESET_TYPE_4		

Maximum Time for Software Mode

ADC1_MAX_TIME	Offset	Reset Value
Maximum Time for Software Mode	10_H	see Table 433

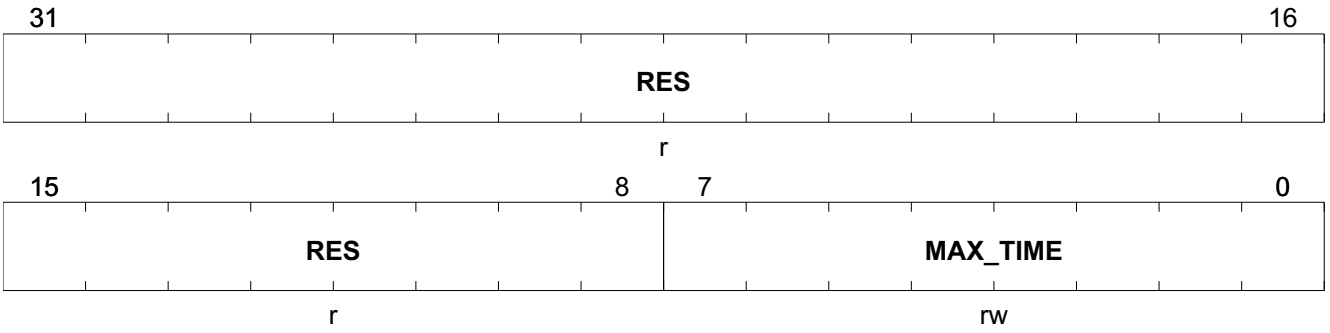

Field	Bits	Type	Description
RES	31:8	r	**Reserved** Always read as 0
MAX_TIME	7:0	rw	**Maximum Time in Software Mode** Maximum time in Software Mode with the unit of 50 ns. Software mode is active for ADC1_MAX_TIME * 50 ns 00_H **min** Software mode is immediately left FF_H **max** Software mode is active for 12.75 us

Table 433 RESET of ADC1_MAX_TIME

Register Reset Type	Reset Values	Reset Short Name	Reset Mode	Note
RESET_TYPE_4	$0000\ 0000_H$	RESET_TYPE_4		

24.6 Calibration Unit

24.6.1 Functional Description

The calibration unit of the Measurement Core module is dedicated to cancel offset and gain errors out of the signal chain. The upcoming two chapter describe usage and setup of the calibration unit.

24.6.1.1 Method for determining the Calibration Parameters

As mentioned in the introduction of the calibration unit, the module can be used to correct gain and offset errors caused by non-idealities in the measurement chain. This non-idealities are caused by the corresponding measurement chain modules.

Those first order non-idealities are:

- Offset and Gain Error of ADC1.
- Offset and Gain Error of the Attenuator (especially voltage measurement).
- Offset and Gain Error of Reference Voltage.

All these factors are summed up in the overall Gain (factor **b**) and overall Offset (adder **a**) of the complete measurement chain. They are calculated from a two point test result and stored inside the NVM.

Note: ***The calibration of the VBAT_SENSE-Pin and the HV-Monitoring-Pins was done without external resistor.***

24.6.1.2 Setup of Calibration Unit

Each channel has its own calibration unit and thus also its dedicated Gain and Offset parameter. These parameters are stored in a 100TP page of the Flash Module. After each reset of RESET_TYPE_4 these coefficients are downloaded from NVM into the corresponding registers. The user may not take care about the configuration of these parameters. After this has been done, the values are used for the correction procedure. The figure below shows the formula performed by the calibration unit and the required **sfr**-Register to control its functionality.

The parameters ADC1_CALOFFS_CHx and ADC1_CALGAIN_CHx are stored in a 8 bit, 2th complement format.

The function applied to calculate the calibrated ADC value is

ADC_cal_CHx = (1 + <ADC_CALGAIN_CHx>/256) * ADC_uncal_CHx + <ADC_CALOFFS_CHx>/2

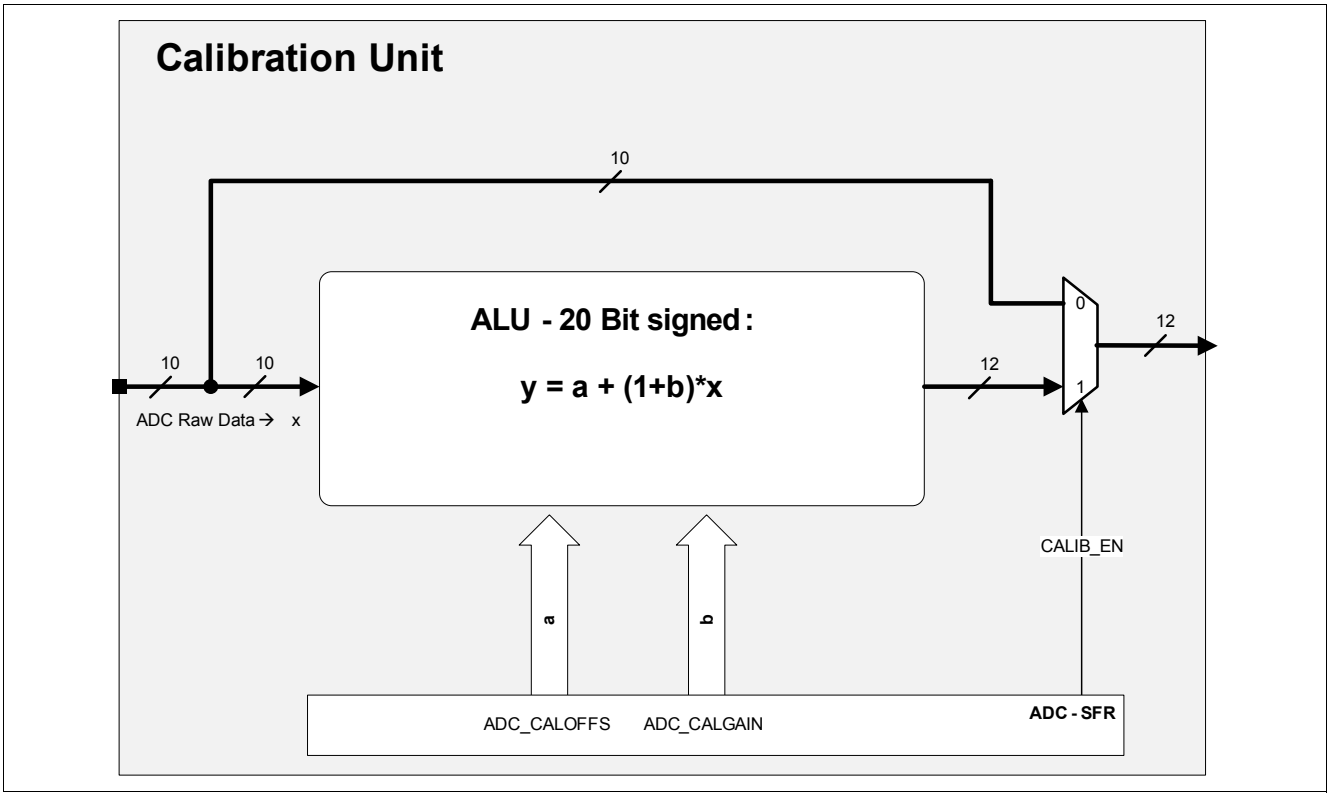

Figure 198 Structure of Calibration Unit

24.6.2 Calibration Unit Control Registers

The Calibration Unit can be configured by the **SFR** Register shown below. All calibration registers can be written by the user. This allows an in-system recalibration of a dedicated measurement.

Table 434 Register Overview

Register Short Name	Register Long Name	Offset Address	Reset Value
Calibration Unit Control Registers,			
ADC1_CAL_CH0_1	Calibration for Channel 0 & 1	48_H	0000 0000$_H$
ADC1_CAL_CH2_3	Calibration for Channel 2 & 3	$4C_H$	0000 0000$_H$
ADC1_CAL_CH4_5	Calibration for Channel 4 & 5	50_H	0000 0000$_H$
ADC1_CAL_CH6_7	Calibration for Channel 6 & 7	54_H	0000 0000$_H$
ADC1_CAL_CH8_9	Calibration for Channel 8 & 9	58_H	0000 0000$_H$
ADC1_CAL_CH10_11	Calibration for Channel 10 & 11	$5C_H$	0000 0000$_H$

The registers are addressed wordwise.

Measurement Unit 1 Calibration for Channel 0 & 1

ADC1_CAL_CH0_1	Offset	Reset Value
Calibration for Channel 0 & 1	48_H	see Table 435

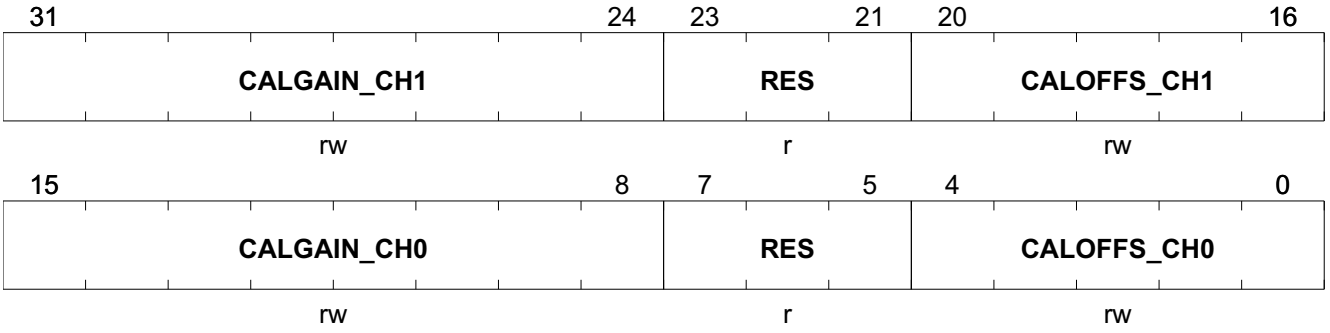

Field	Bits	Type	Description
CALGAIN_CH1	31:24	rw	**Gain Calibration for channel 1** For ADC output set CALIB_EN_1 = 0
RES	23:21	r	**Reserved** Always read as 0
CALOFFS_CH1	20:16	rw	**Offset Calibration for channel 1** For ADC output set CALIB_EN_1 = 0
CALGAIN_CH0	15:8	rw	**Gain Calibration for channel 0** For ADC output set CALIB_EN_0 = 0

Field	Bits	Type	Description
RES	7:5	r	**Reserved** Always read as 0
CALOFFS_CH0	4:0	rw	**Offset Calibration for channel 0** For ADC output set CALIB_EN_0 = 0

Table 435 RESET of ADC1_CAL_CH0_1

Register Reset Type	Reset Values	Reset Short Name	Reset Mode	Note
RESET_TYPE_4	$0000\ 0000_H$	RESET_TYPE_4		

Measurement Unit 1 Calibration for Channel 2 & 3

ADC1_CAL_CH2_3	Offset	Reset Value
Calibration for Channel 2 & 3	$4C_H$	see Table 436

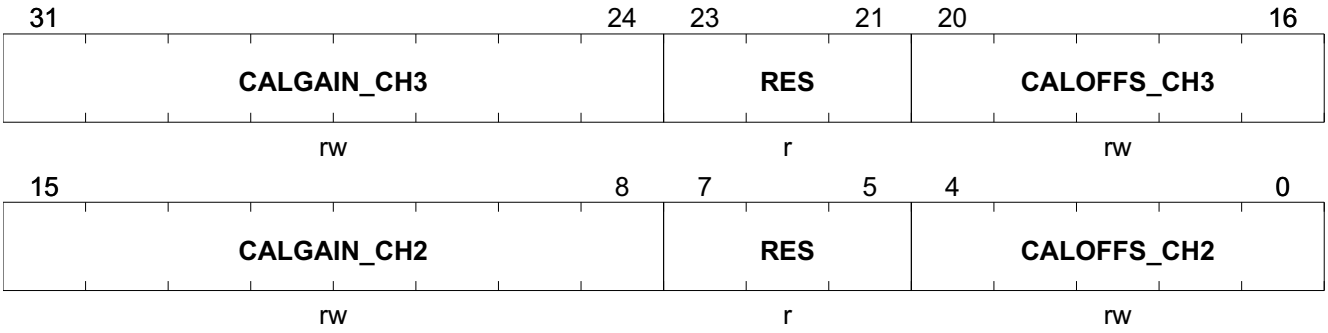

Field	Bits	Type	Description
CALGAIN_CH3	31:24	rw	**Gain Calibration for channel 3** For ADC output set CALIB_EN_3 = 0
RES	23:21	r	**Reserved** Always read as 0
CALOFFS_CH3	20:16	rw	**Offset Calibration for channel 3** For ADC output set CALIB_EN_3 = 0
CALGAIN_CH2	15:8	rw	**Gain Calibration for channel 2** For ADC output set CALIB_EN_2 = 0
RES	7:5	r	**Reserved** Always read as 0
CALOFFS_CH2	4:0	rw	**Offset Calibration for channel 2** For ADC output set CALIB_EN_2 = 0

Table 436 RESET of ADC1_CAL_CH2_3

Register Reset Type	Reset Values	Reset Short Name	Reset Mode	Note
RESET_TYPE_4	$0000\ 0000_H$	RESET_TYPE_4		

Measurement Unit 1 Calibration for Channel 4 & 5

ADC1_CAL_CH4_5	Offset	Reset Value
Calibration for Channel 4 & 5	50_H	see Table 437

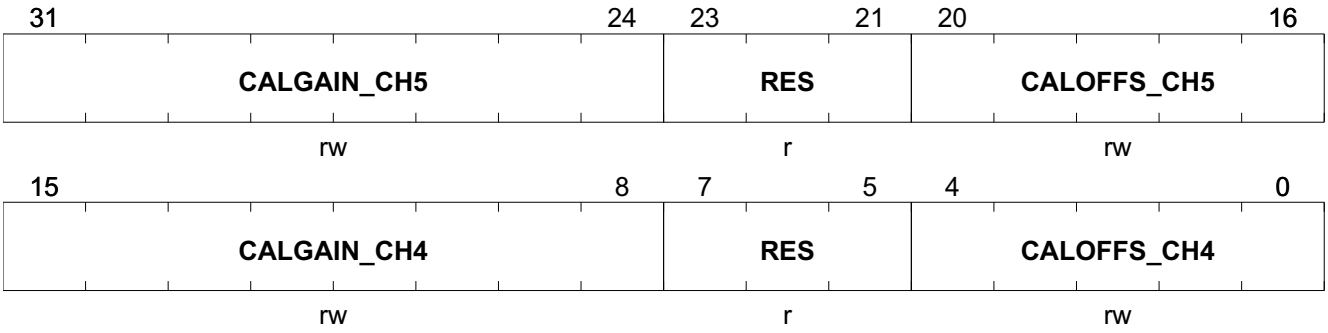

Field	Bits	Type	Description
CALGAIN_CH5	31:24	rw	**Gain Calibration for channel 5** For ADC output set CALIB_EN_5 = 0
RES	23:21	r	**Reserved** Always read as 0
CALOFFS_CH5	20:16	rw	**Offset Calibration for channel 5** For ADC output set CALIB_EN_5 = 0
CALGAIN_CH4	15:8	rw	**Gain Calibration for channel 4** For ADC output set CALIB_EN_4 = 0
RES	7:5	r	**Reserved** Always read as 0
CALOFFS_CH4	4:0	rw	**Offset Calibration for channel 4** For ADC output set CALIB_EN_4 = 0

Table 437 RESET of ADC1_CAL_CH4_5

Register Reset Type	Reset Values	Reset Short Name	Reset Mode	Note
RESET_TYPE_4	$0000\ 0000_H$	RESET_TYPE_4		

Measurement Unit 1 Calibration for Channel 6 & 7

ADC1_CAL_CH6_7	Offset	Reset Value
Calibration for Channel 6 & 7	54_H	see Table 438

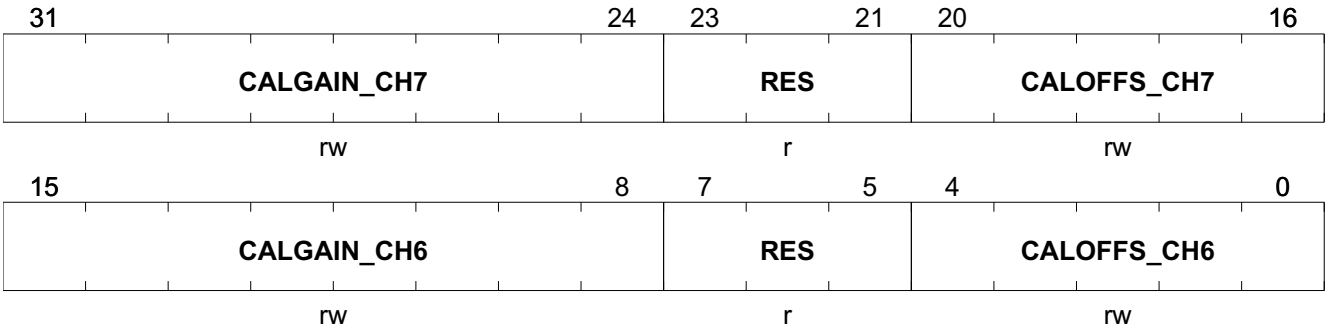

Field	Bits	Type	Description
CALGAIN_CH7	31:24	rw	**Gain Calibration for channel 7** For ADC output set CALIB_EN_7 = 0
RES	23:21	r	**Reserved** Always read as 0
CALOFFS_CH7	20:16	rw	**Offset Calibration for channel 7** For ADC output set CALIB_EN_7 = 0
CALGAIN_CH6	15:8	rw	**Gain Calibration for channel 6** For ADC output set CALIB_EN_6 = 0
RES	7:5	r	**Reserved** Always read as 0
CALOFFS_CH6	4:0	rw	**Offset Calibration for channel 6** For ADC output set CALIB_EN_6 = 0

Table 438 RESET of ADC1_CAL_CH6_7

Register Reset Type	Reset Values	Reset Short Name	Reset Mode	Note
RESET_TYPE_4	$0000\ 0000_H$	RESET_TYPE_4		

Measurement Unit 1 Calibration for Channel 8 & 9

ADC1_CAL_CH8_9	Offset	Reset Value
Calibration for Channel 8 & 9	58_H	see Table 439

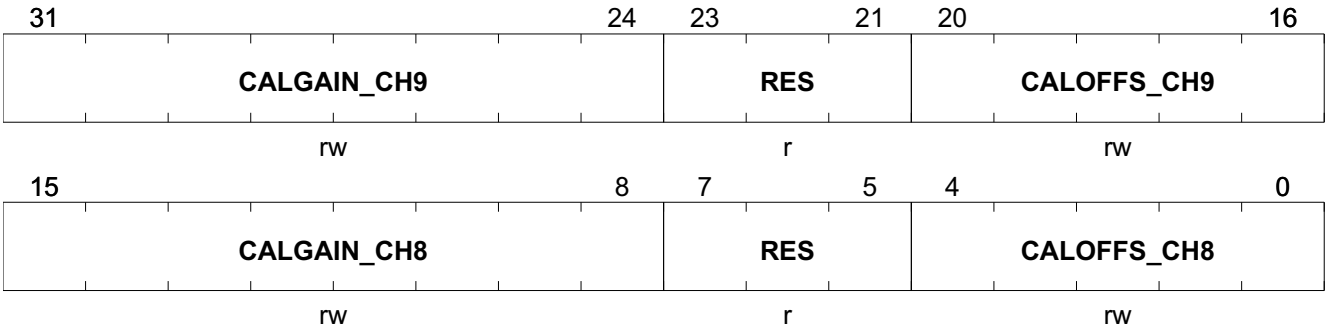

Field	Bits	Type	Description
CALGAIN_CH9	31:24	rw	**Gain Calibration for channel 9** For ADC output set CALIB_EN_9 = 0
RES	23:21	r	**Reserved** Always read as 0
CALOFFS_CH9	20:16	rw	**Offset Calibration for channel 9** For ADC output set CALIB_EN_9 = 0
CALGAIN_CH8	15:8	rw	**Gain Calibration for channel 8** For ADC output set CALIB_EN_8 = 0
RES	7:5	r	**Reserved** Always read as 0
CALOFFS_CH8	4:0	rw	**Offset Calibration for channel 8** For ADC output set CALIB_EN_8 = 0

Table 439 RESET of ADC1_CAL_CH8_9

Register Reset Type	Reset Values	Reset Short Name	Reset Mode	Note
RESET_TYPE_4	0000 0000_H	RESET_TYPE_4		

Measurement Unit 1 Calibration for Channel 10 & 11

ADC1_CAL_CH10_11	Offset	Reset Value
Calibration for Channel 10 & 11	$5C_H$	see Table 440

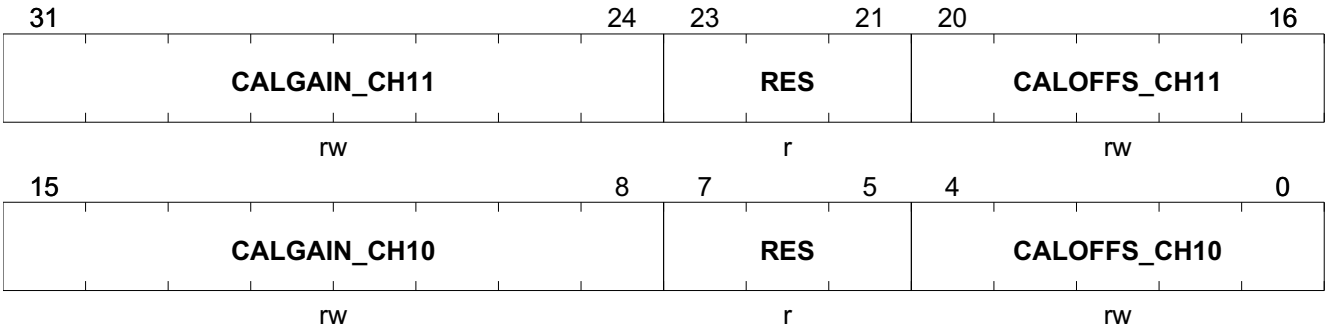

Field	Bits	Type	Description
CALGAIN_CH11	31:24	rw	**Gain Calibration for channel 11** For ADC output set CALIB_EN_11 = 0
RES	23:21	r	**Reserved** Always read as 0
CALOFFS_CH11	20:16	rw	**Offset Calibration for channel 11** For ADC output set CALIB_EN_11 = 0
CALGAIN_CH10	15:8	rw	**Gain Calibration for channel 10** For ADC output set CALIB_EN_10 = 0
RES	7:5	r	**Reserved** Always read as 0
CALOFFS_CH10	4:0	rw	**Offset Calibration for channel 10** For ADC output set CALIB_EN_10 = 0

Table 440 RESET of ADC1_CAL_CH10_11

Register Reset Type	Reset Values	Reset Short Name	Reset Mode	Note
RESET_TYPE_4	$0000\ 0000_H$	RESET_TYPE_4		

24.7 IIR-Filter

24.7.1 Functional Description

To cancel low frequency noise out of the measured signal, every channel of the digital signal includes a first order IIR Filter. The structure of the IIR Filter is shown in the picture below.

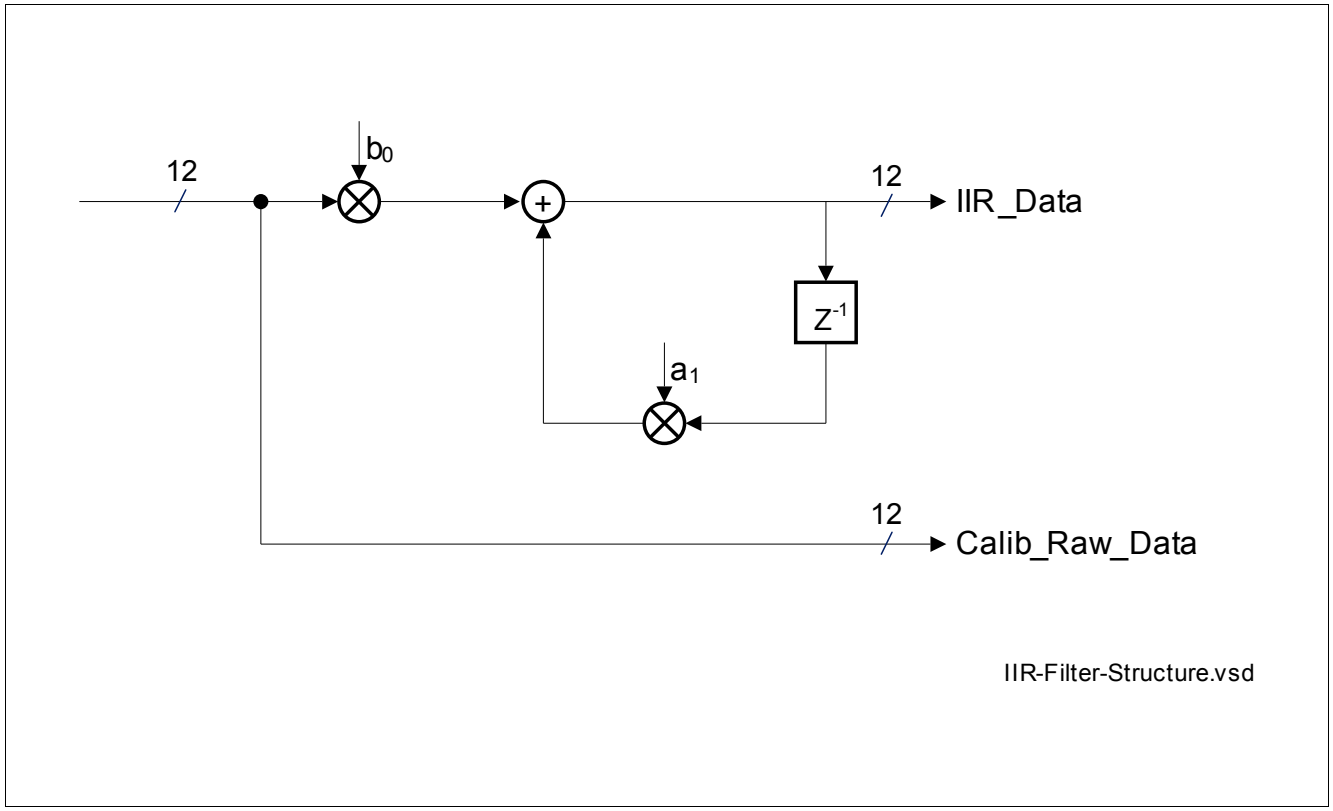

Figure 199 IIR-Filter Implementation Structure

$$H_{IIR}(z) = \frac{b}{1 - a * z^{-1}} \tag{29}$$

This filter allows an effective suppression of high-frequency components like noise or crosstalk caused by HF-components in order to avoid the generation of unwanted interrupts. The coefficient b can be expressed as:

$$b = 1 - a \tag{30}$$

The IIR Filter transfer function is shown in the plot below.

$$H_{IIR}(z) = \frac{1 - a}{(1 - a * z^{-1})} \quad (31)$$

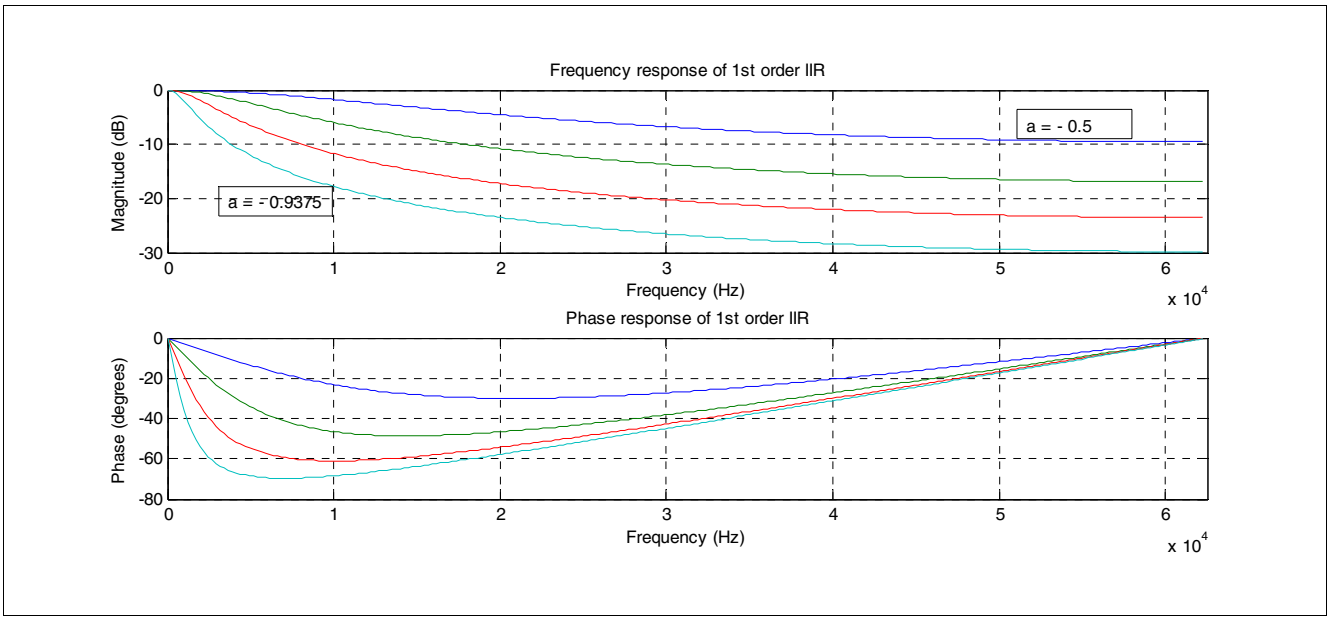

Figure 200 IIR filter transfer function for different filter length fl (1MHz corresponds to 1/2*channel sampling frequency)

24.7.1.1 Step Response

The IIR filter's step response time is shown in the figure below:

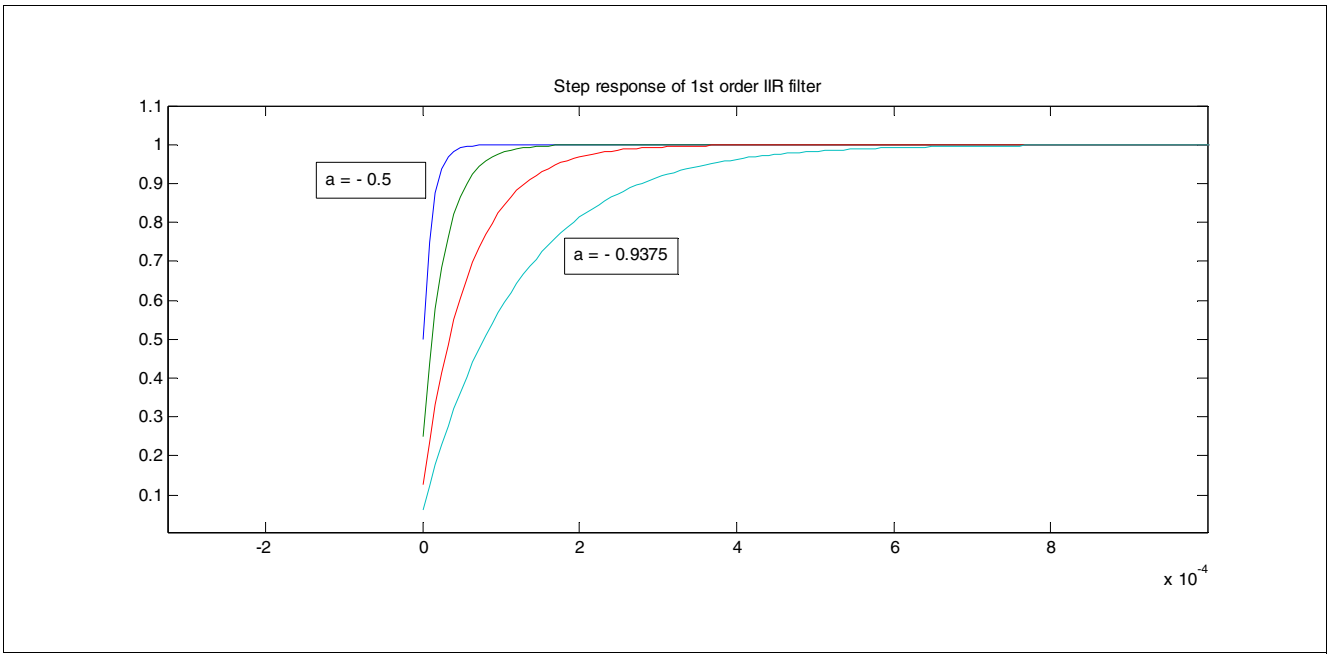

Figure 201 IIR Step Response Time

Table 441 summarizes the main filter characteristics.

Table 441 IIR filter characteristics

Filter coefficient	Group delay at=ω0	Normalized -3dB frequency [1]	-3dB frequency @ $f_{s_ch}/2$=250 kHz
a	**τ[samples]**	**$f_{-3dB}/(f_{s_ch}/2)$**	**f_{-3dB} [Hz]**
2^{-1}	2		
2^{-2}	4		
2^{-3}	8		
2^{-4}	16		

1) The filter's - 3dB frequency is normalized to half the channel sampling frequency (Nyquist frequency)

24.7.2 IIR Filter Control Registers

The IIR Filter can also be configured by the **sfr** Register shown below.

The **ADC1_FILT_OUT0** to **ADC1_FILT_OUT11** registers are 12 bits wide, but the ADC delivers only a resolution of 10 bits. **Table 442** shows how the lower two bits are determined.

Table 442 ADC1_FILT_OUT register setting

ADC1_CTRL2.calib_en	ADC1_CTRL5.filt_out_sel	ADC1_FILT_OUT0.output[1:0]
0	0	“00”
0	1	“filt_out(3:2)”
1	0	“calib_out(1:0)”
1	1	“filt_out(3:2)”

The result of the calibration unit is 12 bits (see **Figure 7**), the output is feed into the IIR filter. The internal result of the IIR filter is 12 bits (see **Figure 9**), the output is converted to 10 bit and feed into the postprocessing. The user can monitor the calculated values in the **ADC1_FILT_OUT0** to **ADC1_FILT_OUT11** registers and gets access to 10 bit wide result information.

Table 443 Register Overview

Register Short Name	Register Long Name	Offset Address	Reset Value
IIR Filter Control Registers,			
ADC1_FILTCOEFF0_11	Filter Coefficients Measurement Unit Channel 0-11	60_H	00AA AAAA$_H$
ADC1_FILT_OUT0	ADC1 or Filter Output Channel 0	70_H	0000 0000 0000 0000 0000 00XX XXXX XXXX$_B$
ADC1_FILT_OUT1	ADC1 or Filter Output Channel 1	74_H	0000 0000 0000 0000 0000 00XX XXXX XXXX$_B$
ADC1_FILT_OUT2	ADC1 or Filter Output Channel 2	78_H	0000 0000 0000 0000 0000 00XX XXXX XXXX$_B$
ADC1_FILT_OUT3	ADC1 or Filter Output Channel 3	$7C_H$	0000 0000 0000 0000 0000 00XX XXXX XXXX$_B$
ADC1_FILT_OUT4	ADC1 or Filter Output Channel 4	80_H	0000 0000 0000 0000 0000 00XX XXXX XXXX$_B$

Table 443 Register Overview (cont'd)

Register Short Name	Register Long Name	Offset Address	Reset Value
ADC1_FILT_OUT5	ADC1 or Filter Output Channel 5	84_H	0000 0000 0000 0000 0000 00XX XXXX XXXX$_B$
ADC1_FILT_OUT6	ADC1 or Filter Output Channel 6	88_H	0000 0000 0000 0000 0000 00XX XXXX XXXX$_B$
ADC1_FILT_OUT7	ADC1 or Filter Output Channel 7	$8C_H$	0000 0000 0000 0000 0000 00XX XXXX XXXX$_B$
ADC1_FILT_OUT8	ADC1 or Filter Output Channel 8	90_H	0000 0000 0000 0000 0000 00XX XXXX XXXX$_B$
ADC1_FILT_OUT9	ADC1 or Filter Output Channel 9	94_H	0000 0000 0000 0000 0000 00XX XXXX XXXX$_B$
ADC1_FILT_OUT10	ADC1 or Filter Output Channel 10	98_H	0000 0000 0000 0000 0000 00XX XXXX XXXX$_B$
ADC1_FILT_OUT11	ADC1 or Filter Output Channel 11	$9C_H$	0000 0000 0000 0000 0000 00XX XXXX XXXX$_B$
ADC1_FILT_OUT12	ADC1 or Filter Output Channel 12	110_H	0000 0000 0000 0000 0000 00XX XXXX XXXX$_B$
ADC1_FILT_OUTEIM	ADC1 or Filter Output of EIM	120_H	0000 0000 0000 0000 0000 00XX XXXX XXXX$_B$
ADC1_DIFFCH_OUT1	ADC1 Differential Channel Output 1	$A0_H$	0000 0000 0000 0000 0000 00XX XXXX XXXX$_B$
ADC1_DIFFCH_OUT2	ADC1 Differential Channel Output 2	$A4_H$	0000 0000 0000 0000 0000 00XX XXXX XXXX$_B$

Table 443 Register Overview (cont'd)

Register Short Name	Register Long Name	Offset Address	Reset Value
ADC1_DIFFCH_OUT3	ADC1 Differential Channel Output 3	$A8_H$	0000 0000 0000 0000 0000 00XX XXX XXXX_B
ADC1_DIFFCH_OUT4	ADC1 Differential Channel Output 4	AC_H	0000 0000 0000 0000 0000 00XX XXXX XXXX_B

The registers are addressed wordwise.

Filter Coefficients Measurement Unit 1 Channel 0-11

ADC1_FILTCOEFF0_11	Offset	Reset Value
Filter Coefficients Measurement Unit Channel 0-11	60_H	see Table 444

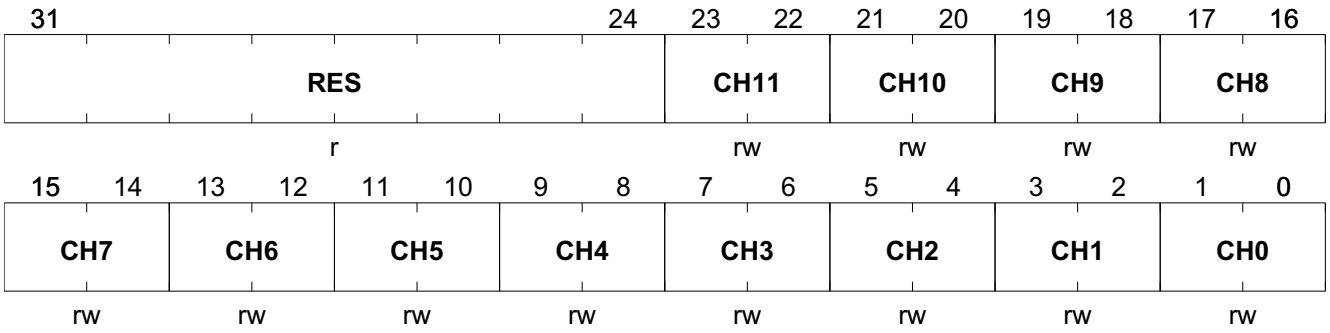

Field	Bits	Type	Description
RES	31:24	r	**Reserved** Always read as 0
CH11	23:22	rw	**Filter Coefficients ADC channel 11** 00_B **1/2** weight of current sample 01_B **1/4** weight of current sample 10_B **1/8** weight of current sample 11_B **1/16** weight of current sample
CH10	21:20	rw	**Filter Coefficients ADC channel 10** 00_B **1/2** weight of current sample 01_B **1/4** weight of current sample 10_B **1/8** weight of current sample 11_B **1/16** weight of current sample

Field	Bits	Type	Description
CH9	19:18	rw	**Filter Coefficients ADC channel 9** 00_B **1/2** weight of current sample 01_B **1/4** weight of current sample 10_B **1/8** weight of current sample 11_B **1/16** weight of current sample
CH8	17:16	rw	**Filter Coefficients ADC channel 8** 00_B **1/2** weight of current sample 01_B **1/4** weight of current sample 10_B **1/8** weight of current sample 11_B **1/16** weight of current sample
CH7	15:14	rw	**Filter Coefficients ADC channel 7** 00_B **1/2** weight of current sample 01_B **1/4** weight of current sample 10_B **1/8** weight of current sample 11_B **1/16** weight of current sample
CH6	13:12	rw	**Filter Coefficients ADC channel 6** 00_B **1/2** weight of current sample 01_B **1/4** weight of current sample 10_B **1/8** weight of current sample 11_B **1/16** weight of current sample
CH5	11:10	rw	**Filter Coefficients ADC channel 5** 00_B **1/2** weight of current sample 01_B **1/4** weight of current sample 10_B **1/8** weight of current sample 11_B **1/16** weight of current sample
CH4	9:8	rw	**Filter Coefficients ADC channel 4** 00_B **1/2** weight of current sample 01_B **1/4** weight of current sample 10_B **1/8** weight of current sample 11_B **1/16** weight of current sample
CH3	7:6	rw	**Filter Coefficients ADC channel 3** 00_B **1/2** weight of current sample 01_B **1/4** weight of current sample 10_B **1/8** weight of current sample 11_B **1/16** weight of current sample
CH2	5:4	rw	**Filter Coefficients ADC channel 2** 00_B **1/2** weight of current sample 01_B **1/4** weight of current sample 10_B **1/8** weight of current sample 11_B **1/16** weight of current sample
CH1	3:2	rw	**Filter Coefficients ADC channel 1** 00_B **1/2** weight of current sample 01_B **1/4** weight of current sample 10_B **1/8** weight of current sample 11_B **1/16** weight of current sample

Field	Bits	Type	Description
CH0	1:0	rw	**Filter Coefficients ADC channel 0** 00_B **1/2** weight of current sample 01_B **1/4** weight of current sample 10_B **1/8** weight of current sample 11_B **1/16** weight of current sample

Table 444 RESET of ADC1_FILTCOEFF0_11

Register Reset Type	Reset Values	Reset Short Name	Reset Mode	Note
RESET_TYPE_4	00AA AAAA$_H$	RESET_TYPE_4		

ADC1 or Filter Output Channel 0

This registers reflects the current value of channel 0 of the measurement chain, which is assigned to Supply Voltage VS of the system.

ADC1_FILT_OUT0	Offset	Reset Value
ADC1 or Filter Output Channel 0	70_H	see Table 445

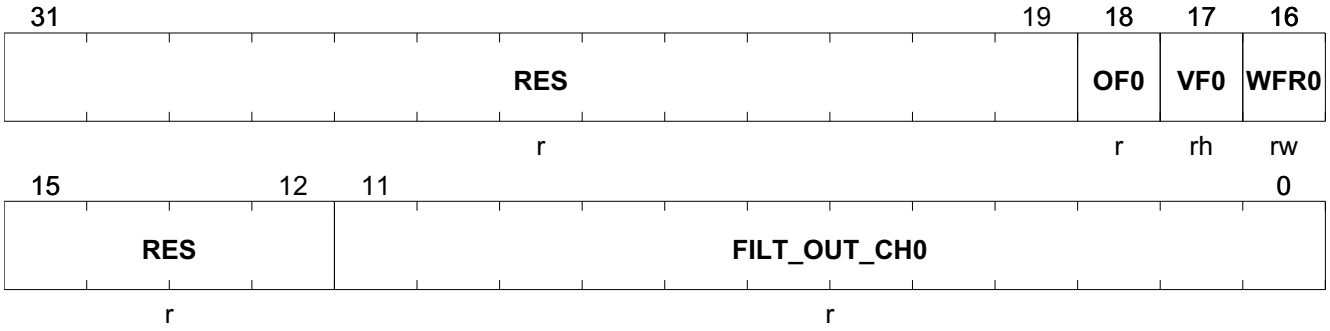

Field	Bits	Type	Description
RES	31:19	r	**Reserved** Always read as 0
OF0	18	r	**Overrun Flag** Indicates if the result register is overwritten with new content (bit is set if VFx = 1 and new result is updated by hardware. *Note: Only set in WFRx = DISABLE and no software mode, clear on read of FILT_OUT_CH0 register* 0_B **NO OVERRUN** Result register not overwritten 1_B **OVERRUN** Result register overwritten
VF0	17	rh	**Valid Flag** Indicates valid contents in result register bit field ADC1_OUT_CH0 *Note: Bit is set by hardware on update of result register and it is cleared by software once the FILT_OUT_CH0 register is read. The hardware update has priority than the software read in case the event occurs at the same cycle.* 0_B **NOT VALID** No new valid data available 1_B **VALID** Result register contains valid data and has not yet been read
WFR0	16	rw	**Wait for Read Mode** Enables wait for read mode for result register 0_B **DISABLE** overwrite mode 1_B **ENABLE** wait for read mode enabled
RES	15:12	r	**Reserved** Always read as 0

Field	Bits	Type	Description
FILT_OUT_CH0	11:0	r	**ADC or filter output value channel 0** For ADC output set ADC1_FILTUP_0_EN = 0

Table 445 RESET of ADC1_FILT_OUT0

Register Reset Type	Reset Values	Reset Short Name	Reset Mode	Note
RESET_TYPE_3	0000 $0XXX_H$	RESET_TYPE_3		Exact reset value: 0000 0000 0000 0000 0000 00XX XXXX XXXX(binary)

ADC1 or Filter Output Channel 1

ADC1_FILT_OUT1	Offset	Reset Value
ADC1 or Filter Output Channel 1	74_H	see Table 446

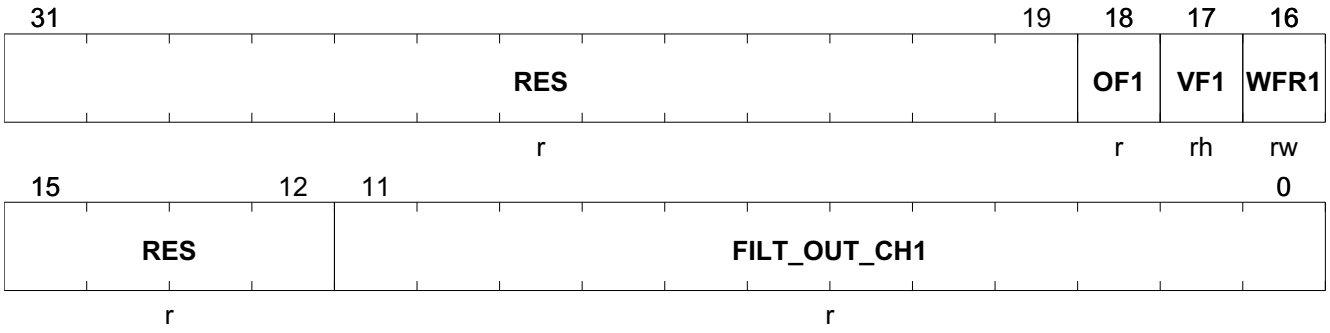

Field	Bits	Type	Description
RES	31:19	r	**Reserved** Always read as 0
OF1	18	r	**Overrun Flag** Indicates if the result register is overwritten with new content (bit is set if VFx = 1 and new result is updated by hardware. *Note: Only set in WFRx = DISABLE and no software mode, clear on read of FILT_OUT_CH1 register* 0_B **NO OVERRUN** Result register not overwritten 1_B **OVERRUN** Result register overwritten
VF1	17	rh	**Valid Flag** Indicates valid contents in result register bit field ADC1_OUT_CH1 *Note: Bit is set by hardware on update of result register and it is cleared by software once the FILT_OUT_CH1 register is read. The hardware update has priority than the software read in case the event occurs at the same cycle.* 0_B **NOT VALID** No new valid data available 1_B **VALID** Result register contains valid data and has not yet been read
WFR1	16	rw	**Wait for Read Mode** Enables wait for read mode for result register 0_B **DISABLE** overwrite mode 1_B **ENABLE** wait for read mode enabled
RES	15:12	r	**Reserved** Always read as 0
FILT_OUT_CH1	11:0	r	**ADC or filter output value channel 1** For ADC output set ADC1_FILTUP_1_EN = 0

Table 446 RESET of ADC1_FILT_OUT1

Register Reset Type	Reset Values	Reset Short Name	Reset Mode	Note
RESET_TYPE_3	0000 $0XXX_H$	RESET_TYPE_3		Exact reset value: 0000 0000 0000 0000 0000 00XX XXXX XXXX(binary)

ADC1 or Filter Output Channel 2

ADC1_FILT_OUT2	Offset	Reset Value
ADC1 or Filter Output Channel 2	78_H	see Table 447

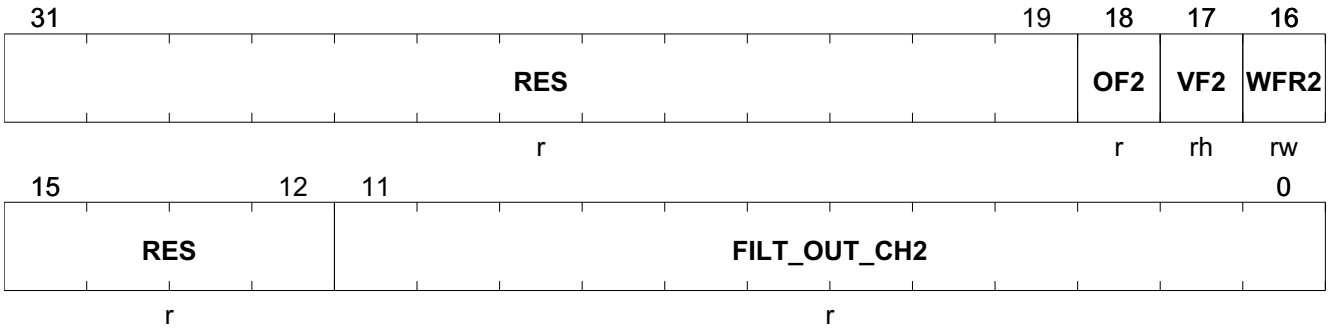

Field	Bits	Type	Description
RES	31:19	r	**Reserved** Always read as 0
OF2	18	r	**Overrun Flag** Indicates if the result register is overwritten with new content (bit is set if VFx = 1 and new result is updated by hardware. *Note: Only set in WFRx = DISABLE and no software mode, clear on read of FILT_OUT_CH2 register* 0_B **NO OVERRUN** Result register not overwritten 1_B **OVERRUN** Result register overwritten
VF2	17	rh	**Valid Flag** Indicates valid contents in result register bit field ADC1_OUT_CH2 *Note: Bit is set by hardware on update of result register and it is cleared by software once the FILT_OUT_CH2 register is read. The hardware update has priority than the software read in case the event occurs at the same cycle.* 0_B **NOT VALID** No new valid data available 1_B **VALID** Result register contains valid data and has not yet been read
WFR2	16	rw	**Wait for Read Mode** Enables wait for read mode for result register 0_B **DISABLE** overwrite mode 1_B **ENABLE** wait for read mode enabled
RES	15:12	r	**Reserved** Always read as 0
FILT_OUT_CH2	11:0	r	**ADC or filter output value channel 2** For ADC output set ADC1_FILTUP_2_EN = 0

Table 447 RESET of ADC1_FILT_OUT2

Register Reset Type	Reset Values	Reset Short Name	Reset Mode	Note
RESET_TYPE_3	0000 $0XXX_H$	RESET_TYPE_3		Exact reset value: 0000 0000 0000 0000 0000 00XX XXXX XXXX(binary)

ADC1 or Filter Output Channel 3

ADC1_FILT_OUT3	Offset	Reset Value
ADC1 or Filter Output Channel 3	$7C_H$	see Table 448

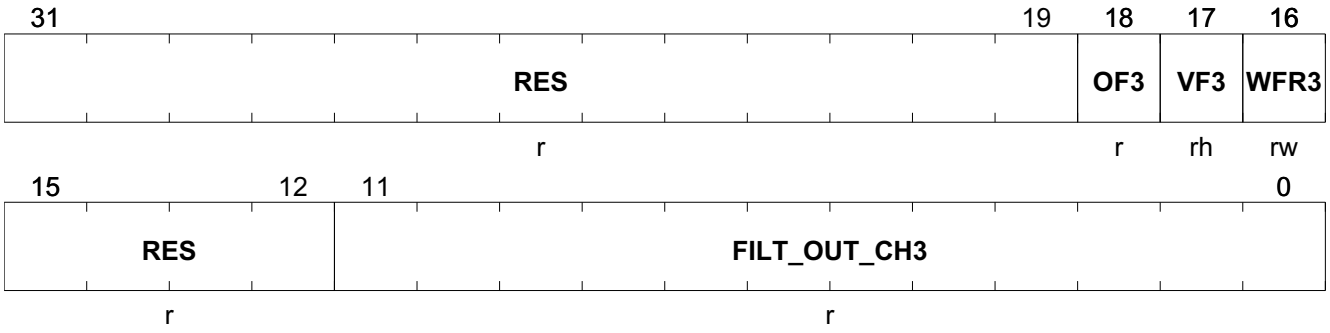

Field	Bits	Type	Description
RES	31:19	r	**Reserved** Always read as 0
OF3	18	r	**Overrun Flag** Indicates if the result register is overwritten with new content (bit is set if VFx = 1 and new result is updated by hardware. *Note: Only set in WFRx = DISABLE and no software mode, clear on read of FILT_OUT_CH3 register* 0_B **NO OVERRUN** Result register not overwritten 1_B **OVERRUN** Result register overwritten
VF3	17	rh	**Valid Flag** Indicates valid contents in result register bit field ADC1_OUT_CH3 *Note: Bit is set by hardware on update of result register and it is cleared by software once the FILT_OUT_CH3 register is read. The hardware update has priority than the software read in case the event occurs at the same cycle.* 0_B **NOT VALID** No new valid data available 1_B **VALID** Result register contains valid data and has not yet been read
WFR3	16	rw	**Wait for Read Mode** Enables wait for read mode for result register 0_B **DISABLE** overwrite mode 1_B **ENABLE** wait for read mode enabled
RES	15:12	r	**Reserved** Always read as 0
FILT_OUT_CH3	11:0	r	**ADC or filter output value channel 3** For ADC output set ADC1_FILTUP_3_EN = 0

Table 448 RESET of ADC1_FILT_OUT3

Register Reset Type	Reset Values	Reset Short Name	Reset Mode	Note
RESET_TYPE_3	0000 $0XXX_H$	RESET_TYPE_3		Exact reset value: 0000 0000 0000 0000 0000 00XX XXXX XXXX(binary)

ADC1 or Filter Output Channel 4

ADC1_FILT_OUT4	Offset	Reset Value
ADC1 or Filter Output Channel 4	80_H	see Table 449

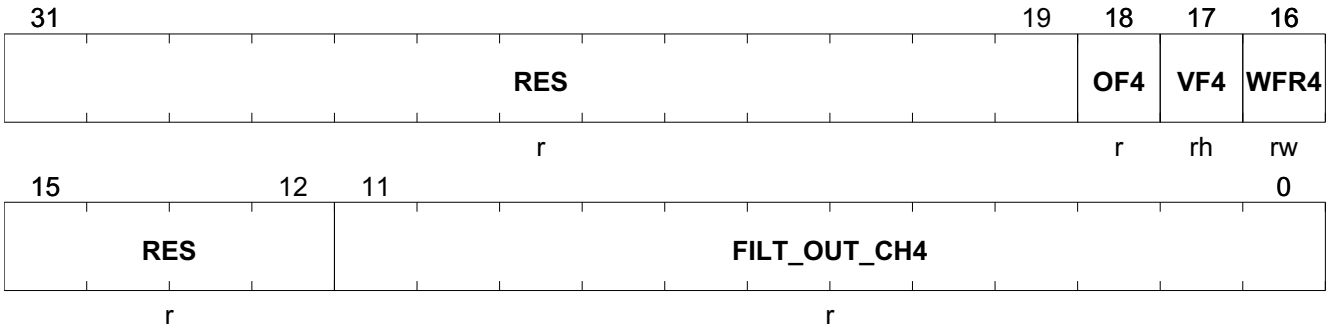

Field	Bits	Type	Description
RES	31:19	r	**Reserved** Always read as 0
OF4	18	r	**Overrun Flag** Indicates if the result register is overwritten with new content (bit is set if VFx = 1 and new result is updated by hardware. *Note: Only set in WFRx = DISABLE and no software mode, clear on read of FILT_OUT_CH4 register* 0_B **NO OVERRUN** Result register not overwritten 1_B **OVERRUN** Result register overwritten
VF4	17	rh	**Valid Flag** Indicates valid contents in result register bit field ADC1_OUT_CH4 *Note: Bit is set by hardware on update of result register and it is cleared by software once the FILT_OUT_CH4 register is read. The hardware update has priority than the software read in case the event occurs at the same cycle.* 0_B **NOT VALID** No new valid data available 1_B **VALID** Result register contains valid data and has not yet been read
WFR4	16	rw	**Wait for Read Mode** Enables wait for read mode for result register 0_B **DISABLE** overwrite mode 1_B **ENABLE** wait for read mode enabled
RES	15:12	r	**Reserved** Always read as 0
FILT_OUT_CH4	11:0	r	**ADC or filter output value channel 4** For ADC output set ADC1_FILTUP_4_EN = 0

Table 449 RESET of ADC1_FILT_OUT4

Register Reset Type	Reset Values	Reset Short Name	Reset Mode	Note
RESET_TYPE_3	0000 $0XXX_H$	RESET_TYPE_3		Exact reset value: 0000 0000 0000 0000 0000 00XX XXXX XXXX(binary)

ADC1 or Filter Output Channel 5

ADC1_FILT_OUT5	Offset	Reset Value
ADC1 or Filter Output Channel 5	84_H	see Table 450

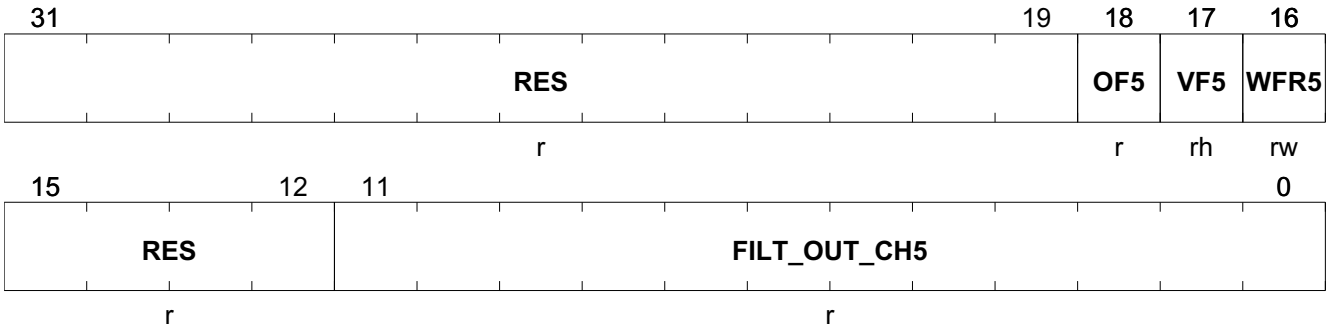

Field	Bits	Type	Description
RES	31:19	r	**Reserved** Always read as 0
OF5	18	r	**Overrun Flag** Indicates if the result register is overwritten with new content (bit is set if VFx = 1 and new result is updated by hardware. *Note: Only set in WFRx = DISABLE and no software mode, clear on read of FILT_OUT_CH5 register* 0_B **NO OVERRUN** Result register not overwritten 1_B **OVERRUN** Result register overwritten
VF5	17	rh	**Valid Flag** Indicates valid contents in result register bit field ADC1_OUT_CH5 *Note: Bit is set by hardware on update of result register and it is cleared by software once the FILT_OUT_CH5 register is read. The hardware update has priority than the software read in case the event occurs at the same cycle.* 0_B **NOT VALID** No new valid data available 1_B **VALID** Result register contains valid data and has not yet been read
WFR5	16	rw	**Wait for Read Mode** Enables wait for read mode for result register 0_B **DISABLE** overwrite mode 1_B **ENABLE** wait for read mode enabled
RES	15:12	r	**Reserved** Always read as 0
FILT_OUT_CH5	11:0	r	**ADC or filter output value channel 5** For ADC output set ADC1_FILTUP_5_EN = 0

Table 450 RESET of ADC1_FILT_OUT5

Register Reset Type	Reset Values	Reset Short Name	Reset Mode	Note
RESET_TYPE_3	0000 $0XXX_H$	RESET_TYPE_3		Exact reset value: 0000 0000 0000 0000 0000 00XX XXXX XXXX(binary)

ADC1 or Filter Output Channel 6

ADC1_FILT_OUT6	Offset	Reset Value
ADC1 or Filter Output Channel 6	88_H	see Table 451

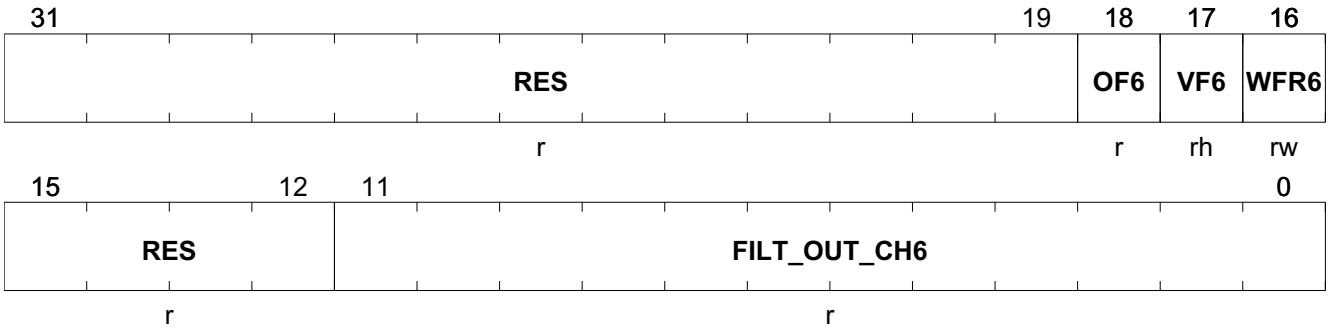

Field	Bits	Type	Description
RES	31:19	r	**Reserved** Always read as 0
OF6	18	r	**Overrun Flag** Indicates if the result register is overwritten with new content (bit is set if VFx = 1 and new result is updated by hardware. *Note: Only set in WFRx = DISABLE and no software mode, clear on read of FILT_OUT_CH6 register* 0_B **NO OVERRUN** Result register not overwritten 1_B **OVERRUN** Result register overwritten
VF6	17	rh	**Valid Flag** Indicates valid contents in result register bit field ADC1_OUT_CH6 *Note: Bit is set by hardware on update of result register and it is cleared by software once the FILT_OUT_CH6 register is read. The hardware update has priority than the software read in case the event occurs at the same cycle.* 0_B **NOT VALID** No new valid data available 1_B **VALID** Result register contains valid data and has not yet been read
WFR6	16	rw	**Wait for Read Mode** Enables wait for read mode for result register 0_B **DISABLE** overwrite mode 1_B **ENABLE** wait for read mode enabled
RES	15:12	r	**Reserved** Always read as 0
FILT_OUT_CH6	11:0	r	**ADC or filter output value channel 6** For ADC output set ADC1_FILTUP_6_EN = 0

Table 451 RESET of ADC1_FILT_OUT6

Register Reset Type	Reset Values	Reset Short Name	Reset Mode	Note
RESET_TYPE_3	0000 $0XXX_H$	RESET_TYPE_3		Exact reset value: 0000 0000 0000 0000 0000 00XX XXXX XXXX(binary)

ADC1 or Filter Output Channel 7

ADC1_FILT_OUT7	Offset	Reset Value
ADC1 or Filter Output Channel 7	$8C_H$	see Table 452

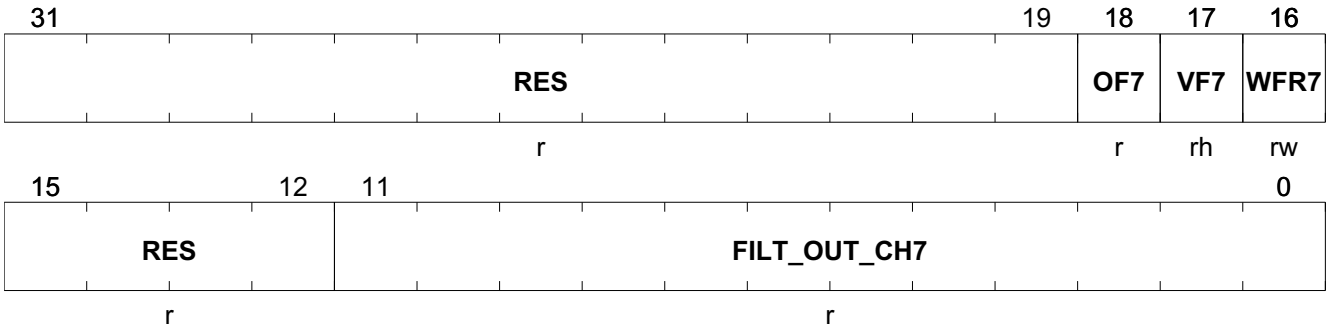

Field	Bits	Type	Description
RES	31:19	r	**Reserved** Always read as 0
OF7	18	r	**Overrun Flag** Indicates if the result register is overwritten with new content (bit is set if VFx = 1 and new result is updated by hardware. *Note: Only set in WFRx = DISABLE and no software mode, clear on read of FILT_OUT_CH7 register* 0_B **NO OVERRUN** Result register not overwritten 1_B **OVERRUN** Result register overwritten
VF7	17	rh	**Valid Flag** Indicates valid contents in result register bit field ADC1_OUT_CH7 *Note: Bit is set by hardware on update of result register and it is cleared by software once the FILT_OUT_CH7 register is read. The hardware update has priority than the software read in case the event occurs at the same cycle.* 0_B **NOT VALID** No new valid data available 1_B **VALID** Result register contains valid data and has not yet been read
WFR7	16	rw	**Wait for Read Mode** Enables wait for read mode for result register 0_B **DISABLE** overwrite mode 1_B **ENABLE** wait for read mode enabled
RES	15:12	r	**Reserved** Always read as 0
FILT_OUT_CH7	11:0	r	**ADC or filter output value channel 7** For ADC output set ADC1_FILTUP_7_EN = 0

Table 452 RESET of ADC1_FILT_OUT7

Register Reset Type	Reset Values	Reset Short Name	Reset Mode	Note
RESET_TYPE_3	0000 $0XXX_H$	RESET_TYPE_3		Exact reset value: 0000 0000 0000 0000 0000 00XX XXXX XXXX(binary)

ADC1 or Filter Output Channel 8

ADC1_FILT_OUT8	Offset	Reset Value
ADC1 or Filter Output Channel 8	90_H	see Table 453

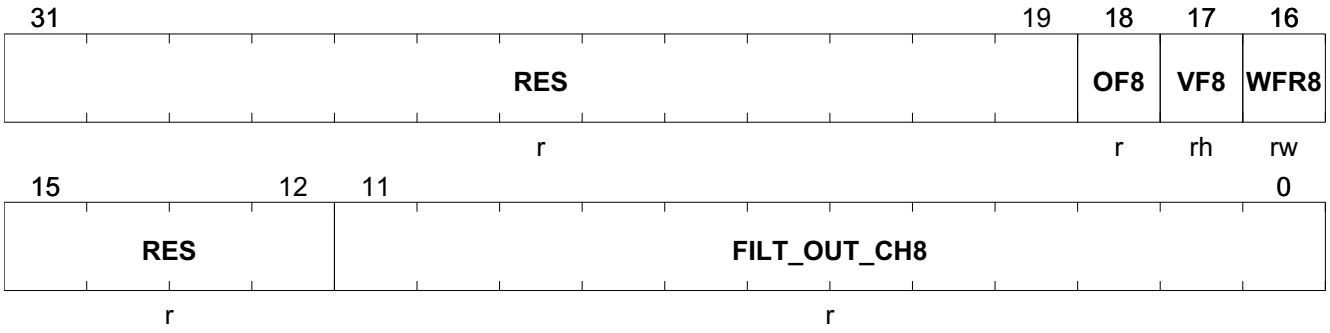

Field	Bits	Type	Description
RES	31:19	r	**Reserved** Always read as 0
OF8	18	r	**Overrun Flag** Indicates if the result register is overwritten with new content (bit is set if VFx = 1 and new result is updated by hardware. *Note: Only set in WFRx = DISABLE and no software mode, clear on read of FILT_OUT_CH8 register* 0_B **NO OVERRUN** Result register not overwritten 1_B **OVERRUN** Result register overwritten
VF8	17	rh	**Valid Flag** Indicates valid contents in result register bit field ADC1_OUT_CH8 *Note: Bit is set by hardware on update of result register and it is cleared by software once the FILT_OUT_CH8 register is read. The hardware update has priority than the software read in case the event occurs at the same cycle.* 0_B **NOT VALID** No new valid data available 1_B **VALID** Result register contains valid data and has not yet been read
WFR8	16	rw	**Wait for Read Mode** Enables wait for read mode for result register 0_B **DISABLE** overwrite mode 1_B **ENABLE** wait for read mode enabled
RES	15:12	r	**Reserved** Always read as 0
FILT_OUT_CH8	11:0	r	**ADC or filter output value channel 8** For ADC output set ADC1_FILTUP_8_EN = 0

Table 453 RESET of ADC1_FILT_OUT8

Register Reset Type	Reset Values	Reset Short Name	Reset Mode	Note
RESET_TYPE_3	0000 $0XXX_H$	RESET_TYPE_3		Exact reset value: 0000 0000 0000 0000 0000 00XX XXXX XXXX(binary)

ADC1 or Filter Output Channel 9

ADC1_FILT_OUT9	Offset	Reset Value
ADC1 or Filter Output Channel 9	94_H	see Table 454

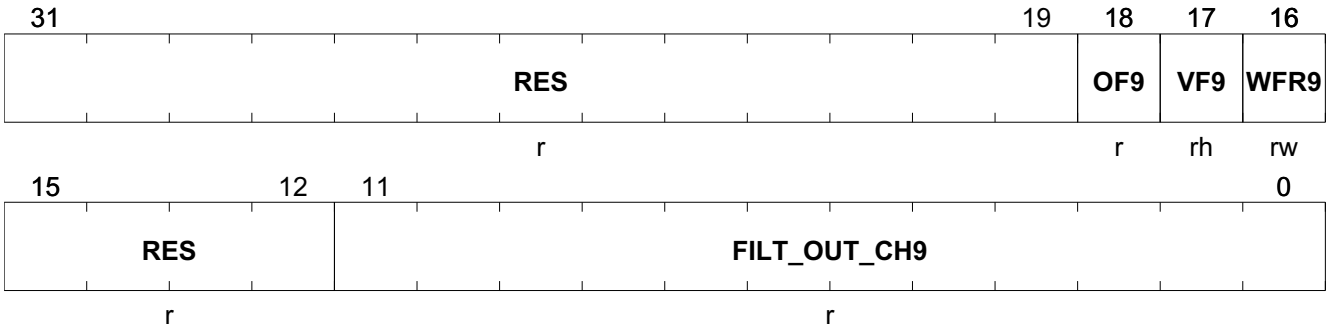

Field	Bits	Type	Description
RES	31:19	r	**Reserved** Always read as 0
OF9	18	r	**Overrun Flag** Indicates if the result register is overwritten with new content (bit is set if VFx = 1 and new result is updated by hardware. *Note: Only set in WFRx = DISABLE and no software mode, clear on read of FILT_OUT_CH9 register* 0_B **NO OVERRUN** Result register not overwritten 1_B **OVERRUN** Result register overwritten
VF9	17	rh	**Valid Flag** Indicates valid contents in result register bit field ADC1_OUT_CH9 *Note: Bit is set by hardware on update of result register and it is cleared by software once the FILT_OUT_CH9 register is read. The hardware update has priority than the software read in case the event occurs at the same cycle.* 0_B **NOT VALID** No new valid data available 1_B **VALID** Result register contains valid data and has not yet been read
WFR9	16	rw	**Wait for Read Mode** Enables wait for read mode for result register 0_B **DISABLE** overwrite mode 1_B **ENABLE** wait for read mode enabled
RES	15:12	r	**Reserved** Always read as 0
FILT_OUT_CH9	11:0	r	**ADC or filter output value channel 9** For ADC output set ADC1_FILTUP_9_EN = 0

Table 454 RESET of ADC1_FILT_OUT9

Register Reset Type	Reset Values	Reset Short Name	Reset Mode	Note
RESET_TYPE_3	0000 $0XXX_H$	RESET_TYPE_3		Exact reset value: 0000 0000 0000 0000 0000 00XX XXXX XXXX(binary)

ADC1 or Filter Output Channel 10

ADC1_FILT_OUT10	Offset	Reset Value
ADC1 or Filter Output Channel 10	98_H	see Table 455

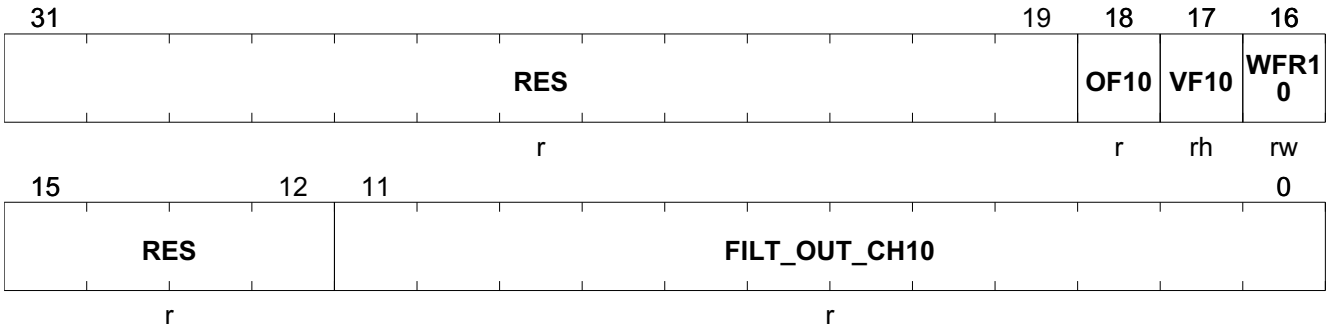

Field	Bits	Type	Description
RES	31:19	r	**Reserved** Always read as 0
OF10	18	r	**Overrun Flag** Indicates if the result register is overwritten with new content (bit is set if VFx = 1 and new result is updated by hardware. *Note: Only set in WFRx = DISABLE and no software mode, clear on read of FILT_OUT_CH10 register* 0_B **NO OVERRUN** Result register not overwritten 1_B **OVERRUN** Result register overwritten
VF10	17	rh	**Valid Flag** Indicates valid contents in result register bit field ADC1_OUT_CH10 *Note: Bit is set by hardware on update of result register and it is cleared by software once the FILT_OUT_CH10 register is read. The hardware update has priority than the software read in case the event occurs at the same cycle.* 0_B **NOT VALID** No new valid data available 1_B **VALID** Result register contains valid data and has not yet been read
WFR10	16	rw	**Wait for Read Mode** Enables wait for read mode for result register 0_B **DISABLE** overwrite mode 1_B **ENABLE** wait for read mode enabled
RES	15:12	r	**Reserved** Always read as 0
FILT_OUT_CH10	11:0	r	**ADC or filter output value channel 10** For ADC output set ADC1_FILTUP_10_EN = 0

Table 455 RESET of ADC1_FILT_OUT10

Register Reset Type	Reset Values	Reset Short Name	Reset Mode	Note
RESET_TYPE_3	0000 $0XXX_H$	RESET_TYPE_3		Exact reset value: 0000 0000 0000 0000 0000 00XX XXXX XXXX(binary)

ADC1 or Filter Output Channel 11

ADC1_FILT_OUT11	Offset	Reset Value
ADC1 or Filter Output Channel 11	$9C_H$	see Table 456

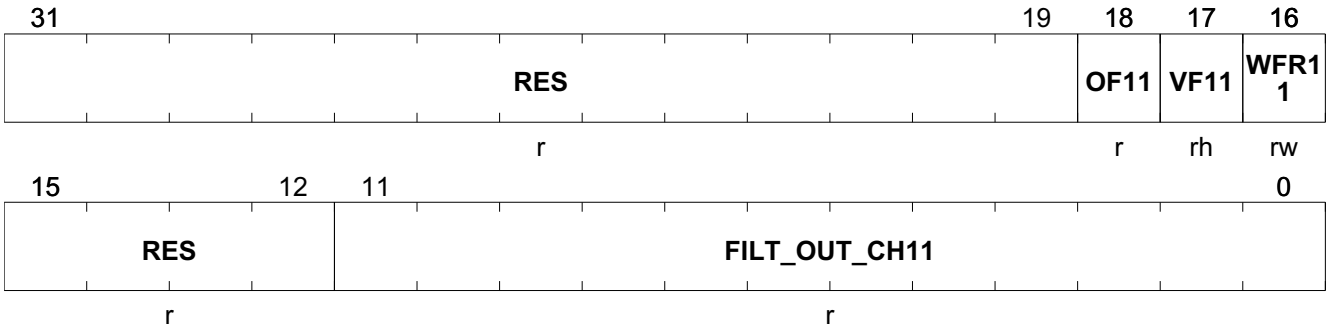

Field	Bits	Type	Description
RES	31:19	r	**Reserved** Always read as 0
OF11	18	r	**Overrun Flag** Indicates if the result register is overwritten with new content (bit is set if VFx = 1 and new result is updated by hardware. *Note: Only set in WFRx = DISABLE and no software mode, clear on read of FILT_OUT_CH11 register* 0_B **NO OVERRUN** Result register not overwritten 1_B **OVERRUN** Result register overwritten
VF11	17	rh	**Valid Flag** Indicates valid contents in result register bit field ADC1_OUT_CH11 *Note: Bit is set by hardware on update of result register and it is cleared by software once the FILT_OUT_CH11 register is read. The hardware update has priority than the software read in case the event occurs at the same cycle.* 0_B **NOT VALID** No new valid data available 1_B **VALID** Result register contains valid data and has not yet been read
WFR11	16	rw	**Wait for Read Mode** Enables wait for read mode for result register 0_B **DISABLE** overwrite mode 1_B **ENABLE** wait for read mode enabled
RES	15:12	r	**Reserved** Always read as 0
FILT_OUT_CH11	11:0	r	**ADC or filter output value channel 11** For ADC output set ADC1_FILTUP_11_EN = 0

Table 456 RESET of ADC1_FILT_OUT11

Register Reset Type	Reset Values	Reset Short Name	Reset Mode	Note
RESET_TYPE_3	0000 $0XXX_H$	RESET_TYPE_3		Exact reset value: 0000 0000 0000 0000 0000 00XX XXXX XXXX(binary)

ADC1 or Filter Output Channel 12

ADC1_FILT_OUT12	Offset	Reset Value
ADC1 or Filter Output Channel 12	110_H	see Table 457

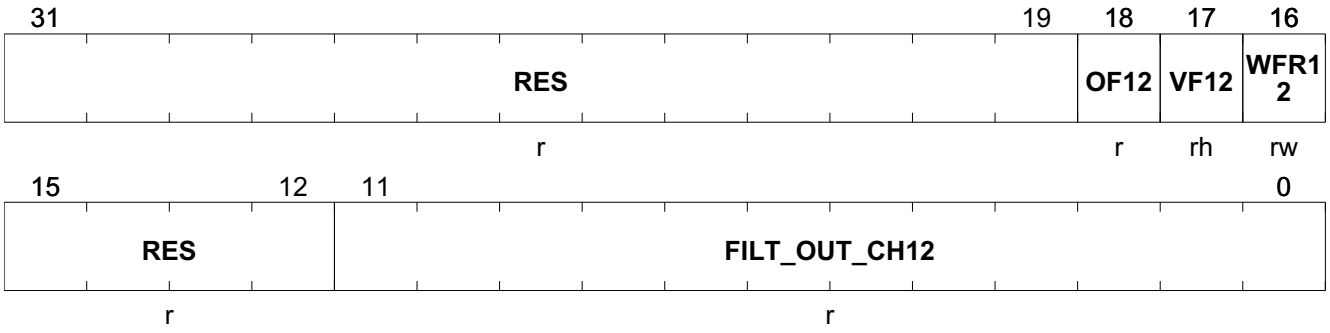

Field	Bits	Type	Description
RES	31:19	r	**Reserved** Always read as 0
OF12	18	r	**Overrun Flag** Indicates if the result register is overwritten with new content (bit is set if VFx = 1 and new result is updated by hardware. *Note: Only set in WFRx = DISABLE and no software mode, clear on read of FILT_OUT_CH12 register* 0_B **NO OVERRUN** Result register not overwritten 1_B **OVERRUN** Result register overwritten
VF12	17	rh	**Valid Flag** Indicates valid contents in result register bit field ADC1_OUT_CH12 *Note: Bit is set by hardware on update of result register and it is cleared by software once the FILT_OUT_CH12 register is read. The hardware update has priority than the software read in case the event occurs at the same cycle.* 0_B **NOT VALID** No new valid data available 1_B **VALID** Result register contains valid data and has not yet been read
WFR12	16	rw	**Wait for Read Mode** Enables wait for read mode for result register 0_B **DISABLE** overwrite mode 1_B **ENABLE** wait for read mode enabled
RES	15:12	r	**Reserved** Always read as 0
FILT_OUT_CH12	11:0	r	**ADC or filter output value channel 12** For ADC output set ADC1_FILTUP_12_EN = 0

Table 457 RESET of ADC1_FILT_OUT12

Register Reset Type	Reset Values	Reset Short Name	Reset Mode	Note
RESET_TYPE_3	0000 $0XXX_H$	RESET_TYPE_3		Exact reset value: 0000 0000 0000 0000 0000 00XX XXXX XXXX(binary)

ADC1 or Filter Output for EIM Measurement

Note: This Channel is not included in the sequencer. EIM Mode uses the postprocessing chain of the selected EIM channel.

ADC1_FILT_OUTEIM	Offset	Reset Value
ADC1 or Filter Output of EIM	120_H	see Table 458

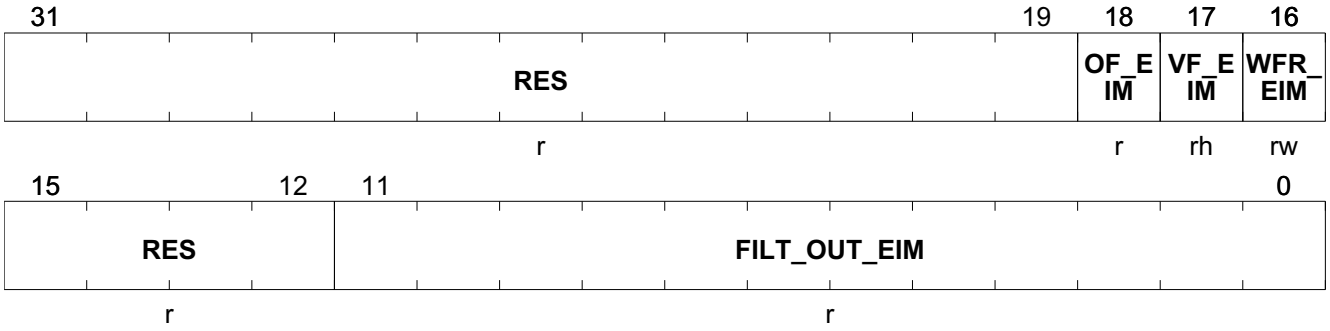

Field	Bits	Type	Description
RES	31:19	r	**Reserved** Always read as 0
OF_EIM	18	r	**Overrun Flag** Indicates if the result register is overwritten with new content (bit is set if VFx = 1 and new result is updated by hardware. *Note: Only set in WFRx = DISABLE and no software mode, clear on read of FILT_OUT_EIM register* 0_B **NO OVERRUN** Result register not overwritten 1_B **OVERRUN** Result register overwritten
VF_EIM	17	rh	**Valid Flag** Indicates valid contents in result register bit field of last EIM Measurement *Note: Bit is set by hardware on update of result register and it is cleared by software once the FILT_OUT_EIM register is read. The hardware update has priority than the software read in case the event occurs at the same cycle.* 0_B **NOT VALID** No new valid data available 1_B **VALID** Result register contains valid data and has not yet been read
WFR_EIM	16	rw	**Wait for Read Mode** Enables wait for read mode for result register 0_B **DISABLE** overwrite mode 1_B **ENABLE** wait for read mode enabled
RES	15:12	r	**Reserved** Always read as 0
FILT_OUT_EIM	11:0	r	**ADC or filter output value for last EIM measurement**

Table 458 RESET of ADC1_FILT_OUTEIM

Register Reset Type	Reset Values	Reset Short Name	Reset Mode	Note
RESET_TYPE_3	0000 $0XXX_H$	RESET_TYPE_3		Exact reset value: 0000 0000 0000 0000 0000 00XX XXXX XXXX(binary)

ADC1 Differential Channel Output 1

ADC1_DIFFCH_OUT1	Offset	Reset Value
ADC1 Differential Channel Output 1	$A0_H$	see Table 459

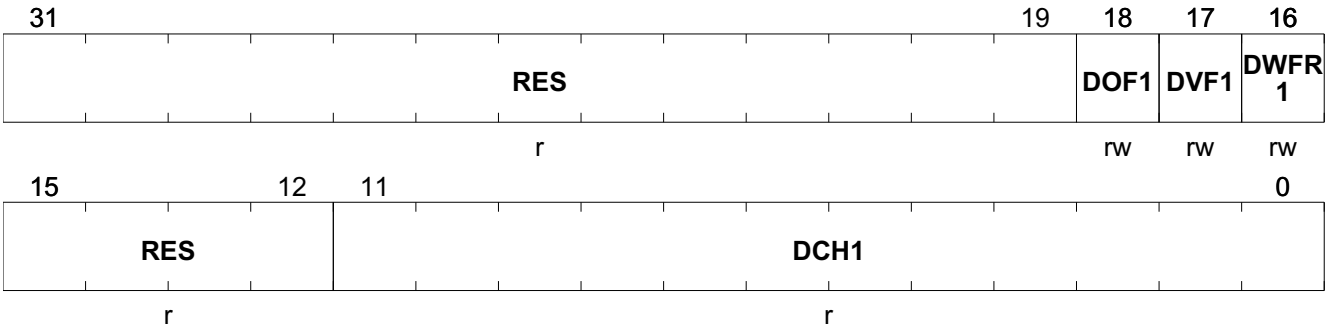

Field	Bits	Type	Description
RES	31:19	r	**Reserved** Always read as 0
DOF1	18	r	**Overrun Flag** Indicates if the result register is overwritten with new content (bit is set if VFx = 1 and new result is updated by hardware. *Note: Only set in WFRx = DISABLE and no software mode, clear on read of DCH1 register* 0_B **NO OVERRUN** Result register not overwritten 1_B **OVERRUN** Result register overwritten
DVF1	17	rh	**Valid Flag** Indicates valid contents in result register bit field ADC1_DOUT1 *Note: Bit is set by hardware on update of result register and it is cleared by software once the DCH1 register is read. The hardware update has priority than the software read in case the event occurs at the same cycle.* 0_B **NOT VALID** No new valid data available 1_B **VALID** Result register contains valid data and has not yet been read
DWFR1	16	rw	**Wait for Read Mode** Enables wait for read mode for result register 0_B **DISABLE** overwrite mode 1_B **ENABLE** wait for read mode enabled
RES	15:12	r	**Reserved** Always read as 0
DCH1	11:0	r	**ADC differential output value 1**

Table 459 RESET of ADC1_DIFFCH_OUT1

Register Reset Type	Reset Values	Reset Short Name	Reset Mode	Note
RESET_TYPE_3	0000 $0XXX_H$	RESET_TYPE_3		Exact reset value: 0000 0000 0000 0000 0000 00XX XXXX XXXX(binary)

ADC1 Differential Channel Output 2

ADC1_DIFFCH_OUT2	Offset	Reset Value
ADC1 Differential Channel Output 2	$A4_H$	see Table 460

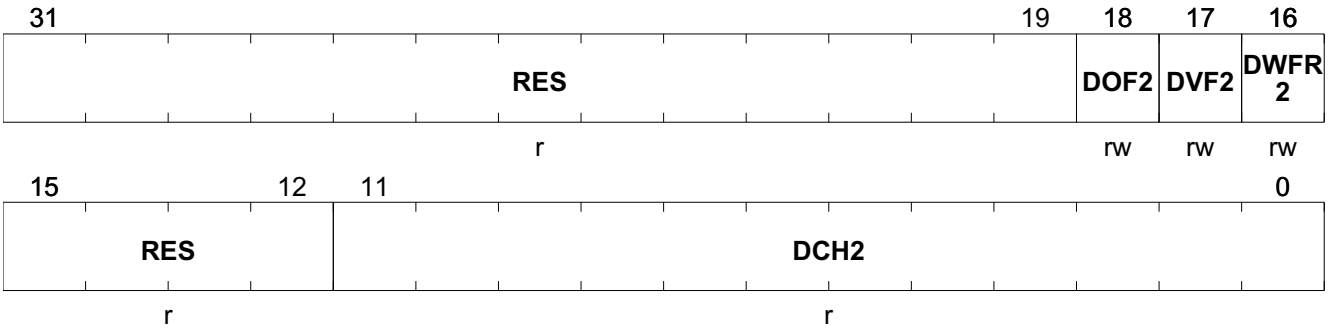

Field	Bits	Type	Description
RES	31:19	r	**Reserved** Always read as 0
DOF2	18	r	**Overrun Flag** Indicates if the result register is overwritten with new content (bit is set if VFx = 1 and new result is updated by hardware. *Note: Only set in WFRx = DISABLE and no software mode, clear on read of DCH2 register* 0_B **NO OVERRUN** Result register not overwritten 1_B **OVERRUN** Result register overwritten
DVF2	17	rh	**Valid Flag** Indicates valid contents in result register bit field ADC1_DOUT2 *Note: Bit is set by hardware on update of result register and it is cleared by software once the DCH2 register is read. The hardware update has priority than the software read in case the event occurs at the same cycle.* 0_B **NOT VALID** No new valid data available 1_B **VALID** Result register contains valid data and has not yet been read
DWFR2	16	rw	**Wait for Read Mode** Enables wait for read mode for result register 0_B **DISABLE** overwrite mode 1_B **ENABLE** wait for read mode enabled
RES	15:12	r	**Reserved** Always read as 0
DCH2	11:0	r	**ADC differential output value 2**

Table 460 RESET of ADC1_DIFFCH_OUT2

Register Reset Type	Reset Values	Reset Short Name	Reset Mode	Note
RESET_TYPE_3	0000 $0XXX_H$	RESET_TYPE_3		Exact reset value: 0000 0000 0000 0000 0000 00XX XXXX XXXX(binary)

ADC1 Differential Channel Output 3

ADC1_DIFFCH_OUT3	Offset	Reset Value
ADC1 Differential Channel Output 3	$A8_H$	see Table 461

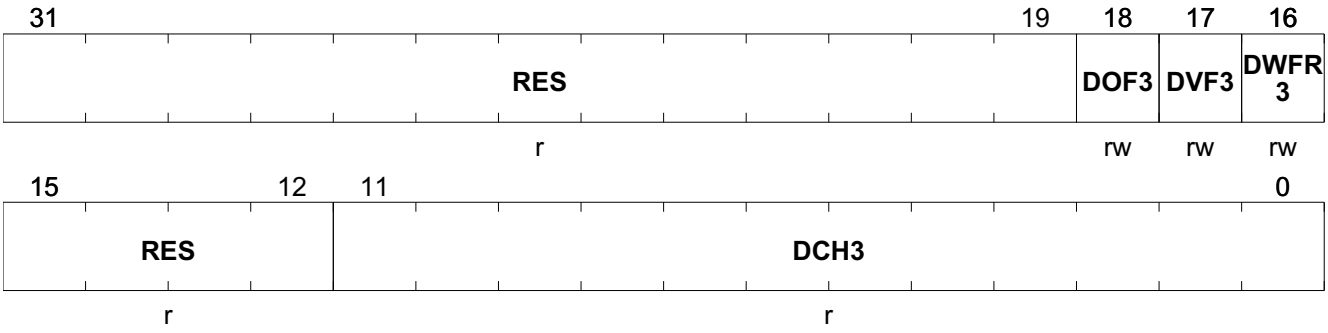

Field	Bits	Type	Description
RES	31:19	r	**Reserved** Always read as 0
DOF3	18	r	**Overrun Flag** Indicates if the result register is overwritten with new content (bit is set if VFx = 1 and new result is updated by hardware. *Note: Only set in WFRx = DISABLE and no software mode, clear on read of DCH3 register* 0_B **NO OVERRUN** Result register not overwritten 1_B **OVERRUN** Result register overwritten
DVF3	17	rh	**Valid Flag** Indicates valid contents in result register bit field ADC1_DOUT3 *Note: Bit is set by hardware on update of result register and it is cleared by software once the DCH3 register is read. The hardware update has priority than the software read in case the event occurs at the same cycle.* 0_B **NOT VALID** No new valid data available 1_B **VALID** Result register contains valid data and has not yet been read
DWFR3	16	rw	**Wait for Read Mode** Enables wait for read mode for result register 0_B **DISABLE** overwrite mode 1_B **ENABLE** wait for read mode enabled
RES	15:12	r	**Reserved** Always read as 0
DCH3	11:0	r	**ADC differential output value 3**

Table 461 RESET of ADC1_DIFFCH_OUT3

Register Reset Type	Reset Values	Reset Short Name	Reset Mode	Note
RESET_TYPE_3	0000 $0XXX_H$	RESET_TYPE_3		Exact reset value: 0000 0000 0000 0000 0000 00XX XXXX XXXX(binary)

ADC1 Differential Channel Output 4

ADC1_DIFFCH_OUT4	Offset	Reset Value
ADC1 Differential Channel Output 4	AC_H	see Table 462

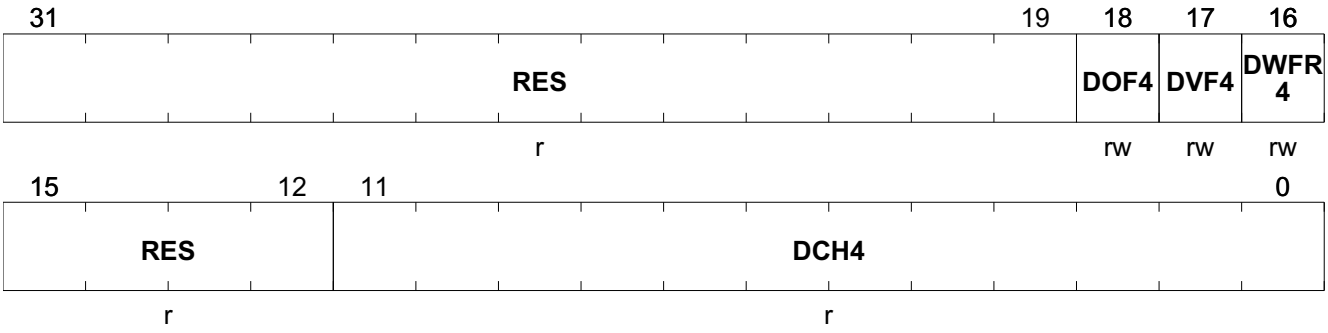

Field	Bits	Type	Description
RES	31:19	r	**Reserved** Always read as 0
DOF4	18	r	**Overrun Flag** Indicates if the result register is overwritten with new content (bit is set if VFx = 1 and new result is updated by hardware. *Note: Only set in WFRx = DISABLE and no software mode, clear on read of DCH4 register* 0_B **NO OVERRUN** Result register not overwritten 1_B **OVERRUN** Result register overwritten
DVF4	17	rh	**Valid Flag** Indicates valid contents in result register bit field ADC1_DOUT4 *Note: Bit is set by hardware on update of result register and it is cleared by software once the DCH4 register is read. The hardware update has priority than the software read in case the event occurs at the same cycle.* 0_B **NOT VALID** No new valid data available 1_B **VALID** Result register contains valid data and has not yet been read
DWFR4	16	rw	**Wait for Read Mode** Enables wait for read mode for result register 0_B **DISABLE** overwrite mode 1_B **ENABLE** wait for read mode enabled
RES	15:12	r	**Reserved** Always read as 0
DCH4	11:0	r	**ADC differential output value 4**

Table 462 RESET of ADC1_DIFFCH_OUT4

Register Reset Type	Reset Values	Reset Short Name	Reset Mode	Note
RESET_TYPE_3	0000 $0XXX_H$	RESET_TYPE_3		Exact reset value: 0000 0000 0000 0000 0000 00XX XXXX XXXX(binary)

24.8 Signal Processing

24.8.1 Functional Description

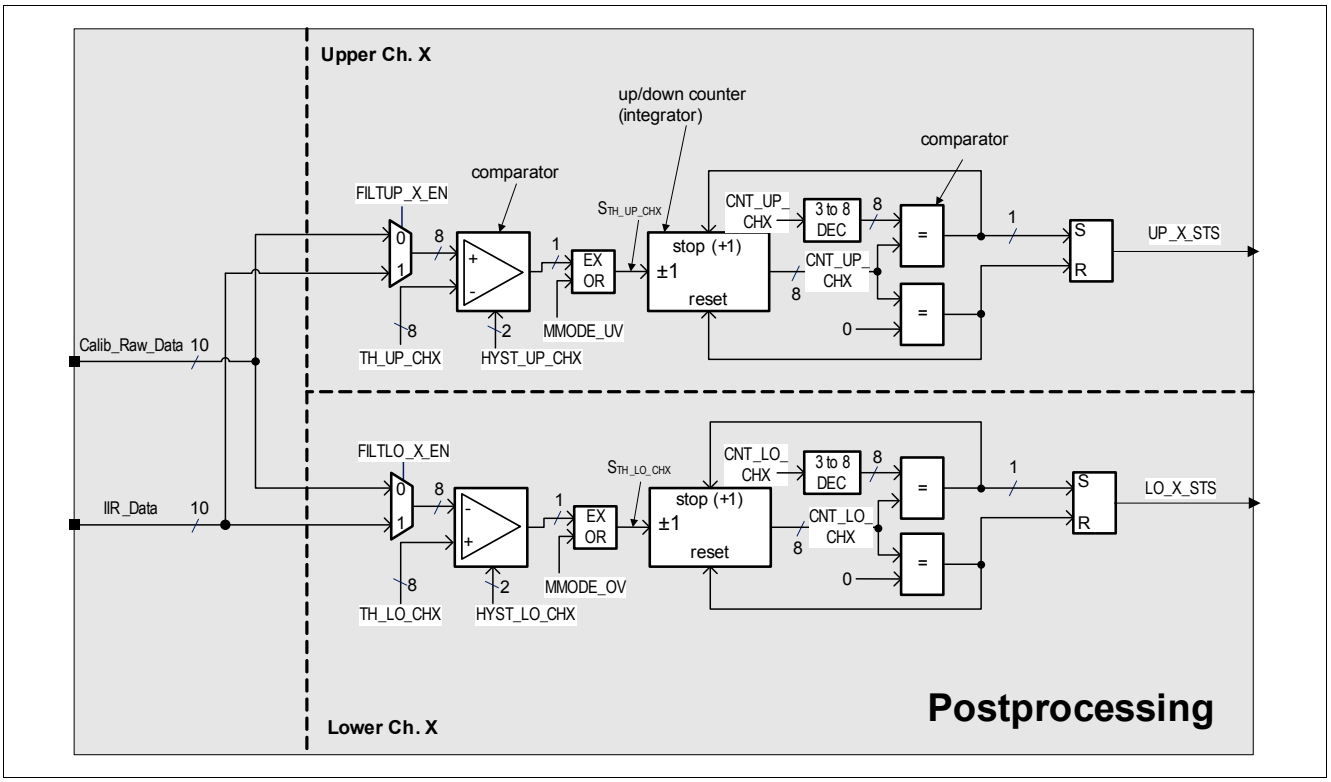

Figure 202 Postprocessing channel block diagram for voltage measurements

As shown in **Figure 202** an adjustable filter can be applied for the upper and the lower measurement channel, which averages 2, 4, 8 or 16 measurement values continuously. The filtered signal or the demultiplexed ADC output signal ADC_OUTX is compared with an upper threshold TH_UP_CHX and a lower threshold TH_LO_CHX. When the thresholds are exceeded, the comparator outputs get active. For all measurement modes a freely adjustable hysteresis can be defined which is defined with the HYST_UP_CHX and HYST_LO_CHX values.

In addition to the first filter stage, the second filters (counters) integrate the comparator output values S_{TH_UP/LO_CHX} until an individual upper and lower timing threshold $2^{CNT_UP/LO_CHX}$ is reached. When reaching the upper timing threshold $2^{CNT_UP_CHX}$, the upper counter increment is stalled and the status output CHX_UP_STS is set. For MMODE_OV = 1, the inverted lower comparator output signal $S_{TH_LO_CHX}$ is normalized again. When the output signal is above TH_LO_CHX, the lower counter is incremented until the max. threshold $2^{CNT_LO_CHX}$ is reached. Individual interrupts for the upper and lower channel can be triggered with the rising edge of the status signals UP/LO_X_STS.

In general the IIR filter stage suppresses higher frequency noise efficiently and triggering with the upper and lower threshold TH_UP/LO_CHX are dependent on the measured values. Hence short high-level spikes might pass the thresholds. In opposite to the first stage the nature of the second filter stage is more a time filter, which is less dependent on the measurement values but on event durations of S_{TH_LO/UP_CHX} as generated by the first comparator stage. Therefore the second stage has a lower noise suppression performance for higher frequencies and also adds a delay for the trigger time proportional to $2^{CNT_LO/HI_CHX}$.

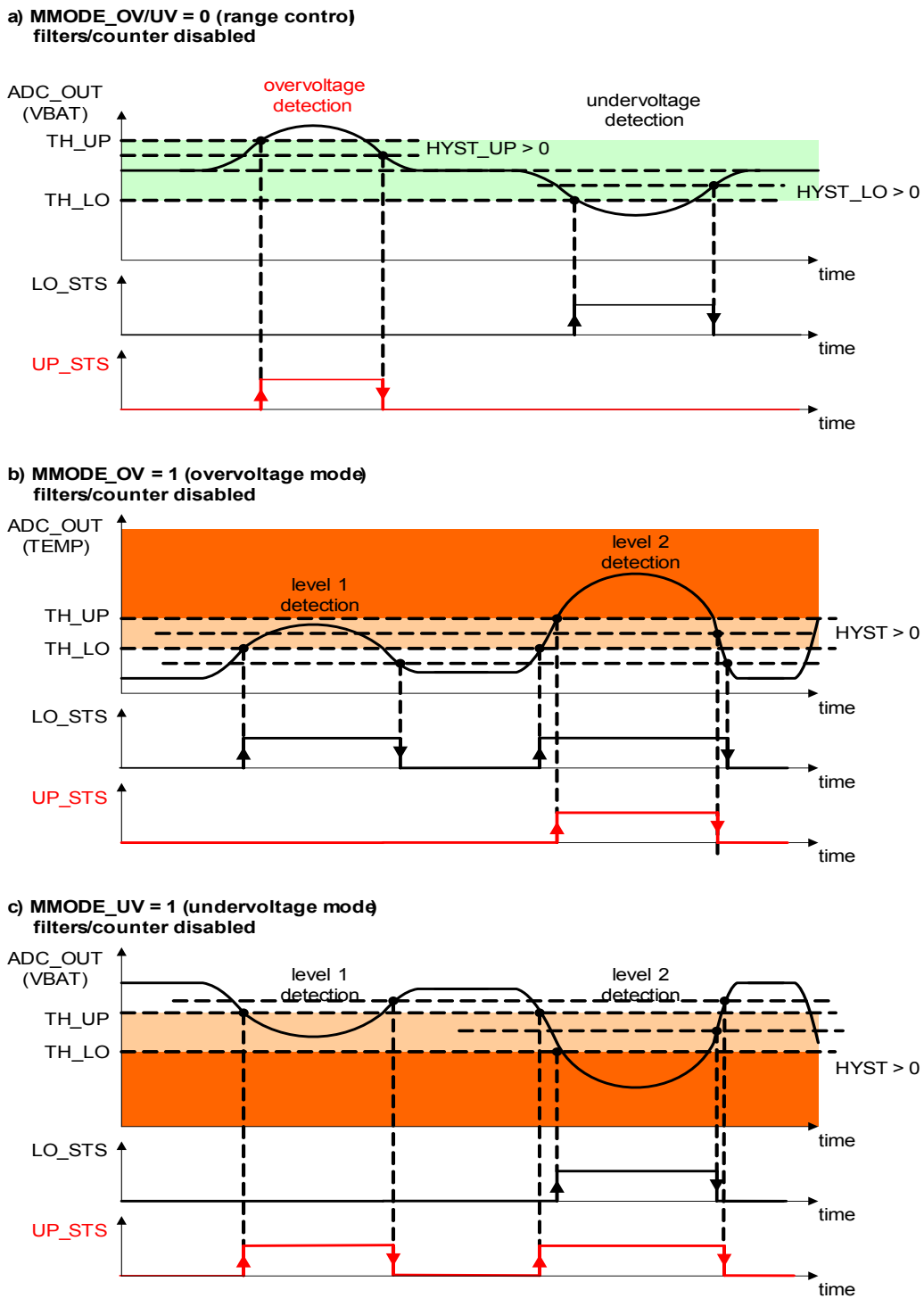

Figure 203 Measurement examples of a measurement channel with disabled filters

Figure 203 shows three examples, an over- and undervoltage detection (e.g. VBAT_SENSE monitoring), a 2-step overvoltage and a 2-step undervoltage detection. The modes MMODE_OV/UV = 1 can be used as prewarning for the application software (e.g. close to supply undervoltage).

24.8.2 Postprocessing Control Registers

The Postprocessing block is fully controllable by the below listed sfr Registers.

Table 463 Register Overview

Register Short Name	Register Long Name	Offset Address	Reset Value
Postprocessing Control Registers,			
ADC1_FILT_UP_CTRL	Upper Threshold Filter Enable	$B0_H$	0000 $FFFF_H$
ADC1_FILT_LO_CTRL	Lower Threshold Filter Enable	$B4_H$	0000 $FFFF_H$
ADC1_TH0_3_LOWER	Lower Comparator Trigger Level Channel 0-3	40_H	1D2F $423A_H$
ADC1_TH4_7_LOWER	Lower Comparator Trigger Level Channel 4-7	44_H	0000 0000_H
ADC1_TH8_11_LOWER	Lower Comparator Trigger Level Channel 8-11	$C0_H$	0000 0000_H
ADC1_DCHTH1_4_LOWER	Lower Comparator Trigger Level Differential Channel 1-4	$C4_H$	0000 0000_H
ADC1_TH0_3_UPPER	Upper Comparator Trigger Level Channel 0-3	$C8_H$	AB8D $C5C0_H$
ADC1_TH4_7_UPPER	Upper Comparator Trigger Level Channel 4-7	CC_H	0000 0000_H
ADC1_TH8_11_UPPER	Upper Comparator Trigger Level Channel 8-11	$D0_H$	0000 0000_H
ADC1_DCHCNT1_4_UPPER	Upper Comparator Trigger Level Differential Channel 1-4	$D4_H$	0000 0000_H
ADC1_CNT0_3_LOWER	Lower Counter Trigger Level Channel 0-3	$D8_H$	1213 1312_H
ADC1_CNT4_7_LOWER	Lower Counter Trigger Level Channel 4-7	DC_H	0000 0000_H
ADC1_CNT8_11_LOWER	Lower Counter Trigger Level Channel 8-11	$E0_H$	0000 0000_H
ADC1_DCHCNT1_4_LOWER	Lower Counter Trigger Level Differential Channel 1-4	$E4_H$	0000 0000_H
ADC1_CNT0_3_UPPER	Upper Counter Trigger Level Channel 0-3	$E8_H$	1213 $1B1A_H$
ADC1_CNT4_7_UPPER	Upper Counter Trigger Level Channel 4-7	EC_H	0000 0000_H
ADC1_CNT8_11_UPPER	Upper Counter Trigger Level Channel 8-11	$F0_H$	0000 0000_H
ADC1_DCHCNT1_4_UPPER	Upper Counter Trigger Level Differential Channel 1-4	$F4_H$	0000 0000_H
ADC1_MMODE0_11	Overvoltage Measurement Mode of Ch 0-11	$F8_H$	0000 0000_H

The registers are addressed wordwise.

Upper Threshold Filter Enable

ADC1_FILT_UP_CTRL	Offset	Reset Value
Upper Threshold Filter Enable	$B0_H$	see Table 464

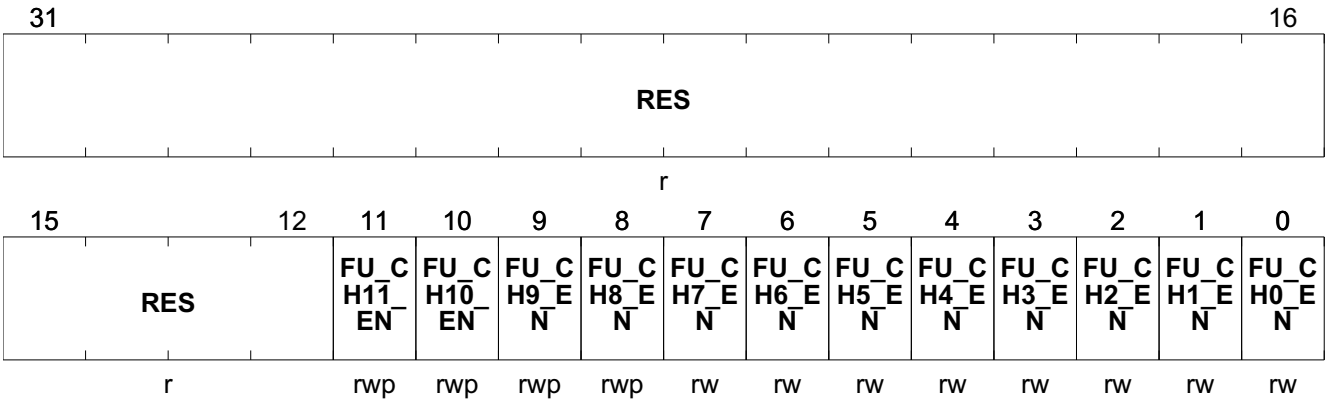

Field	Bits	Type	Description
RES	31:12	r	**Reserved** Always read as 0
FU_CH11_EN	11	rw	**Upper threshold IIR filter enable Channel 11** 0_B disable 1_B enable
FU_CH10_EN	10	rw	**Upper threshold IIR filter enable Channel 10** 0_B disable 1_B enable
FU_CH9_EN	9	rw	**Upper threshold IIR filter enable Channel 9** 0_B disable 1_B enable
FU_CH8_EN	8	rw	**Upper threshold IIR filter enable Channel 8** 0_B disable 1_B enable
FU_CH7_EN	7	rw	**Upper threshold IIR filter enable Channel 7** 0_B disable 1_B enable
FU_CH6_EN	6	rw	**Upper threshold IIR filter enable Channel 6** 0_B disable 1_B enable
FU_CH5_EN	5	rw	**Upper threshold IIR filter enable Channel 5** 0_B disable 1_B enable
FU_CH4_EN	4	rw	**Upper threshold IIR filter enable Channel 4** 0_B disable 1_B enable

Field	Bits	Type	Description
FU_CH3_EN	3	rw	**Upper threshold IIR filter enable Channel 3** 0_B disable 1_B enable
FU_CH2_EN	2	rw	**Upper threshold IIR filter enable Channel 2** 0_B disable 1_B enable
FU_CH1_EN	1	rw	**Upper threshold IIR filter enable Channel 1** 0_B disable 1_B enable
FU_CH0_EN	0	rw	**Upper threshold IIR filter enable Channel 0** 0_B disable 1_B enable

Table 464 RESET of ADC1_FILT_UP_CTRL

Register Reset Type	Reset Values	Reset Short Name	Reset Mode	Note
RESET_TYPE_4	0000 $FFFF_H$	RESET_TYPE_4		

Lower Threshold Filter Enable

Setting this register enables the IIR filter structure for the postprocessing of the lower threshold.

ADC1_FILT_LO_CTRL	Offset	Reset Value
Lower Threshold Filter Enable	$B4_H$	see Table 465

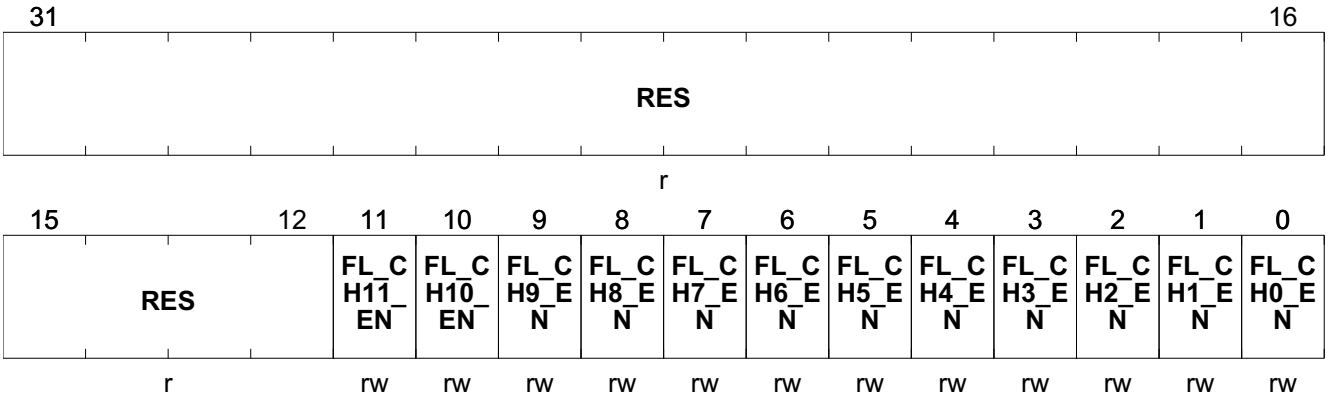

Field	Bits	Type	Description
RES	31:12	r	**Reserved** Always read as 0
FL_CH11_EN	11	rw	**Lower threshold IIR filter enable Channel 11** 0_B disable 1_B enable
FL_CH10_EN	10	rw	**Lower threshold IIR filter enable Channel 10** 0_B disable 1_B enable
FL_CH9_EN	9	rw	**Lower threshold IIR filter enable Channel 9** 0_B disable 1_B enable
FL_CH8_EN	8	rw	**Lower threshold IIR filter enable Channel 8** 0_B disable 1_B enable
FL_CH7_EN	7	rw	**Lower threshold IIR filter enable Channel 7** 0_B disable 1_B enable
FL_CH6_EN	6	rw	**Lower threshold IIR filter enable Channel 6** 0_B disable 1_B enable
FL_CH5_EN	5	rw	**Lower threshold IIR filter enable Channel 5** 0_B disable 1_B enable
FL_CH4_EN	4	rw	**Lower threshold IIR filter enable Channel 4** 0_B disable 1_B enable

Field	Bits	Type	Description
FL_CH3_EN	3	rw	**Lower threshold IIR filter enable Channel 3** 0_B disable 1_B enable
FL_CH2_EN	2	rw	**Lower threshold IIR filter enable Channel 2** 0_B disable 1_B enable
FL_CH1_EN	1	rw	**Lower threshold IIR filter enable Channel 1** 0_B disable 1_B enable
FL_CH0_EN	0	rw	**Lower threshold IIR filter enable Channel 0** 0_B disable 1_B enable

Table 465 RESET of ADC1_FILT_LO_CTRL

Register Reset Type	Reset Values	Reset Short Name	Reset Mode	Note
RESET_TYPE_4	0000 FFFF$_H$	RESET_TYPE_4		

Overvoltage Measurement Mode of Ch 0-11

ADC1_MMODE0_11 **Offset** **Reset Value**

Overvoltage Measurement Mode of Ch 0-11 **F8$_H$** **see Table 466**

31 30	29 28	27 26	25 24	23 22	21 20	19 18	17 16
MMODE_D4	MMODE_D3	MMODE_D2	MMODE_D1	MMODE_11	MMODE_10	MMODE_9	MMODE_8
rw	rw	rw	rw	rw	rw	rw	rw

15 14	13 12	11 10	9 8	7 6	5 4	3 2	1 0
MMODE_7	MMODE_6	MMODE_5	MMODE_4	MMODE_3	MMODE_2	MMODE_1	MMODE_0
rw	rw	rw	rw	rw	rw	rw	rw

Field	Bits	Type	Description
MMODE_D4	31:30	rw	**Measurement mode Differential Channel 4** 00_B **MMODE0** upper & lower voltage/limit measurement 01_B **MMODEUV** undervoltage/-limit measurement 10_B **MMODEOV** overvoltage/-limit measurement 11_B **RESERVED** reserved
MMODE_D3	29:28	rw	**Measurement mode Differential Channel 3** 00_B **MMODE0** upper & lower voltage/limit measurement 01_B **MMODEUV** undervoltage/-limit measurement 10_B **MMODEOV** overvoltage/-limit measurement 11_B **RESERVED** reserved

Field	Bits	Type	Description
MMODE_D2	27:26	rw	**Measurement mode Differential Channel 2** 00_B **MMODE0** upper & lower voltage/limit measurement 01_B **MMODEUV** undervoltage/-limit measurement 10_B **MMODEOV** overvoltage/-limit measurement 11_B **RESERVED** reserved
MMODE_D1	25:24	rw	**Measurement mode Differential Channel 1** 00_B **MMODE0** upper & lower voltage/limit measurement 01_B **MMODEUV** undervoltage/-limit measurement 10_B **MMODEOV** overvoltage/-limit measurement 11_B **RESERVED** reserved
MMODE_11	23:22	rw	**Measurement mode Channel 11** 00_B **MMODE0** upper & lower voltage/limit measurement 01_B **MMODEUV** undervoltage/-limit measurement 10_B **MMODEOV** overvoltage/-limit measurement 11_B **RESERVED** reserved
MMODE_10	21:20	rw	**Measurement mode Channel 10** 00_B **MMODE0** upper & lower voltage/limit measurement 01_B **MMODEUV** undervoltage/-limit measurement 10_B **MMODEOV** overvoltage/-limit measurement 11_B **RESERVED** reserved
MMODE_9	19:18	rw	**Measurement mode Channel 9** 00_B **MMODE0** upper & lower voltage/limit measurement 01_B **MMODEUV** undervoltage/-limit measurement 10_B **MMODEOV** overvoltage/-limit measurement 11_B **RESERVED** reserved
MMODE_8	17:16	rw	**Measurement mode Channel 8** 00_B **MMODE0** upper & lower voltage/limit measurement 01_B **MMODEUV** undervoltage/-limit measurement 10_B **MMODEOV** overvoltage/-limit measurement 11_B **RESERVED** reserved
MMODE_7	15:14	rw	**Measurement mode Channel 7** 00_B **MMODE0** upper & lower voltage/limit measurement 01_B **MMODEUV** undervoltage/-limit measurement 10_B **MMODEOV** overvoltage/-limit measurement 11_B **RESERVED** reserved
MMODE_6	13:12	rw	**Measurement mode Channel 6** 00_B **MMODE0** upper & lower voltage/limit measurement 01_B **MMODEUV** undervoltage/-limit measurement 10_B **MMODEOV** overvoltage/-limit measurement 11_B **RESERVED** reserved
MMODE_5	11:10	rw	**Measurement mode Channel 5** 00_B **MMODE0** upper & lower voltage/limit measurement 01_B **MMODEUV** undervoltage/-limit measurement 10_B **MMODEOV** overvoltage/-limit measurement 11_B **RESERVED** reserved

Field	Bits	Type	Description
MMODE_4	9:8	rw	**Measurement mode Channel 4** 00_B **MMODE0** upper & lower voltage/limit measurement 01_B **MMODEUV** undervoltage/-limit measurement 10_B **MMODEOV** overvoltage/-limit measurement 11_B **RESERVED** reserved
MMODE_3	7:6	rw	**Measurement mode Channel 3** 00_B **MMODE0** upper & lower voltage/limit measurement 01_B **MMODEUV** undervoltage/-limit measurement 10_B **MMODEOV** overvoltage/-limit measurement 11_B **RESERVED** reserved
MMODE_2	5:4	rw	**Measurement mode Channel 2** 00_B **MMODE0** upper & lower voltage/limit measurement 01_B **MMODEUV** undervoltage/-limit measurement 10_B **MMODEOV** overvoltage/-limit measurement 11_B **RESERVED** reserved
MMODE_1	3:2	rw	**Measurement mode Channel 1** 00_B **MMODE0** upper & lower voltage/limit measurement 01_B **MMODEUV** undervoltage/-limit measurement 10_B **MMODEOV** overvoltage/-limit measurement 11_B **RESERVED** reserved
MMODE_0	1:0	rw	**Measurement mode Channel 0** 00_B **MMODE0** upper & lower voltage/limit measurement 01_B **MMODEUV** undervoltage/-limit measurement 10_B **MMODEOV** overvoltage/-limit measurement 11_B **RESERVED** reserved

Table 466 RESET of ADC1_MMODE0_11

Register Reset Type	Reset Values	Reset Short Name	Reset Mode	Note
RESET_TYPE_4	$0000\ 0000_H$	RESET_TYPE_4		

Upper Comparator Trigger Level Channel 0-3

ADC1_TH0_3_UPPER	Offset	Reset Value
Upper Comparator Trigger Level Channel 0-3	$C8_H$	see Table 467

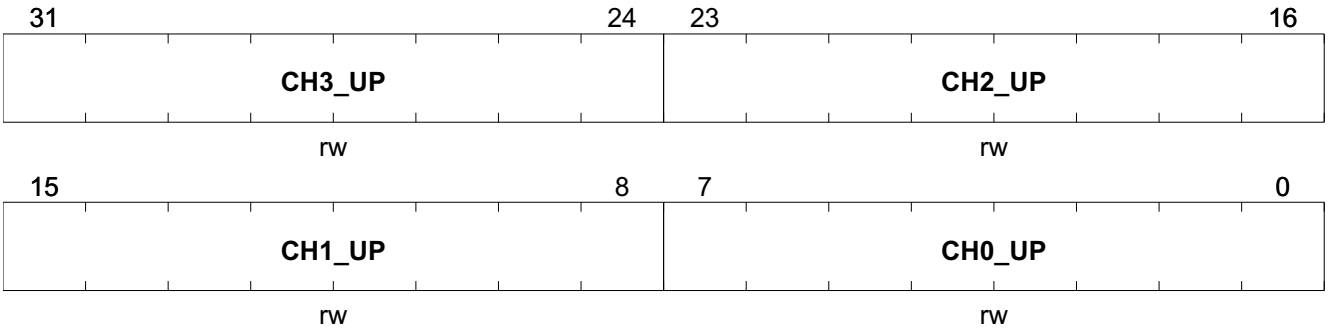

Field	Bits	Type	Description
CH3_UP	31:24	rw	**Channel 3 upper trigger level** 00_H min. threshold value = 0 FF_H max. threshold value = 255
CH2_UP	23:16	rw	**Channel 2 upper trigger level** 00_H min. threshold value = 0 FF_H max. threshold value = 255
CH1_UP	15:8	rw	**Channel 1 upper trigger level** 00_H min. threshold value = 0 FF_H max. threshold value = 255
CH0_UP	7:0	rw	**Channel 0 upper trigger level** 00_H min. threshold value = 0 FF_H max. threshold value = 255

Table 467 RESET of ADC1_TH0_3_UPPER

Register Reset Type	Reset Values	Reset Short Name	Reset Mode	Note
RESET_TYPE_4	AB8D C5C0$_H$	RESET_TYPE_4		

Upper Comparator Trigger Level Channel 4-7

ADC1_TH4_7_UPPER	Offset	Reset Value
Upper Comparator Trigger Level Channel 4-7	CC_H	see Table 468

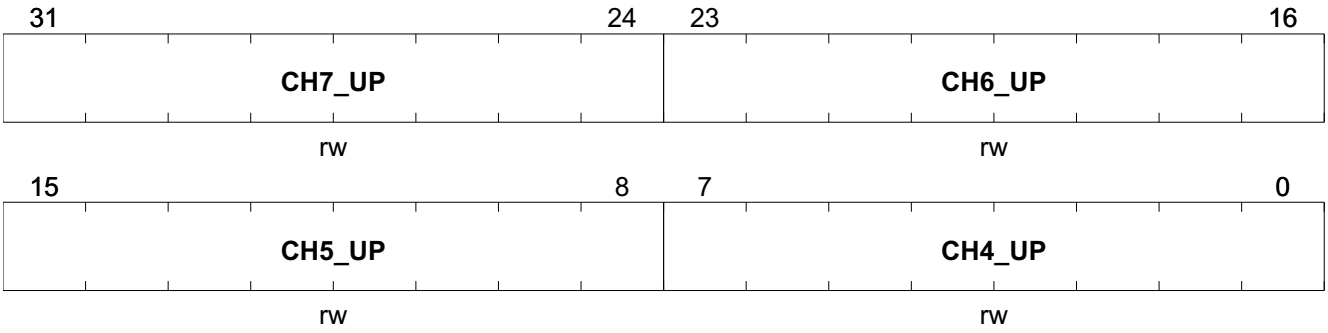

Field	Bits	Type	Description
CH7_UP	31:24	rw	**Channel 7 upper trigger level** 00_H min. threshold value = 0 FF_H max. threshold value = 255
CH6_UP	23:16	rw	**Channel 6upper trigger level** 00_H min. threshold value = 0 FF_H max. threshold value = 255
CH5_UP	15:8	rw	**Channel 5 upper trigger level** 00_H min. threshold value = 0 FF_H max. threshold value = 255
CH4_UP	7:0	rw	**Channel 4 upper trigger level** 00_H min. threshold value = 0 FF_H max. threshold value = 255

Table 468 RESET of ADC1_TH4_7_UPPER

Register Reset Type	Reset Values	Reset Short Name	Reset Mode	Note
RESET_TYPE_4	$0000\ 0000_H$	RESET_TYPE_4		

Upper Comparator Trigger Level Channel 8-11

ADC1_TH8_11_UPPER	Offset	Reset Value
Upper Comparator Trigger Level Channel 8-11	$D0_H$	see Table 469

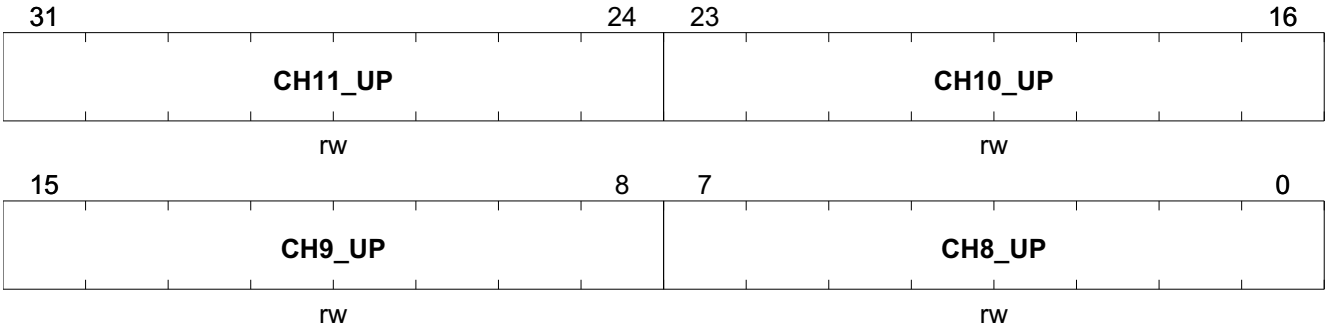

Field	Bits	Type	Description
CH11_UP	31:24	rw	**Channel 11 upper trigger level** 00_H min. threshold value = 0 FF_H max. threshold value = 255
CH10_UP	23:16	rw	**Channel 10 upper trigger level** 00_H min. threshold value = 0 FF_H max. threshold value = 255
CH9_UP	15:8	rw	**Channel 9 upper trigger level** 00_H min. threshold value = 0 FF_H max. threshold value = 255
CH8_UP	7:0	rw	**Channel 8 upper trigger level** 00_H min. threshold value = 0 FF_H max. threshold value = 255

Table 469 RESET of ADC1_TH8_11_UPPER

Register Reset Type	Reset Values	Reset Short Name	Reset Mode	Note
RESET_TYPE_4	$0000\ 0000_H$	RESET_TYPE_4		

Upper Comparator Trigger Level Differential Channel 1-4

ADC1_DCHTH1_4_UPPER	Offset	Reset Value
Upper Comparator Trigger Level Differential Channel 1-4	$D4_H$	see Table 470

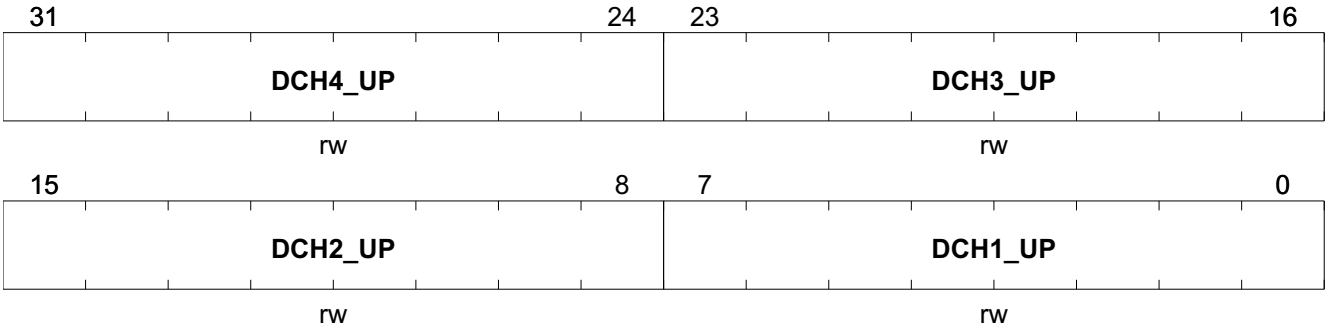

Field	Bits	Type	Description
DCH4_UP	31:24	rw	**Differential Channel 4 upper trigger level** 00_H min. threshold value = 0 FF_H max. threshold value = 255
DCH3_UP	23:16	rw	**Differential Channel 3 upper trigger level** 00_H min. threshold value = 0 FF_H max. threshold value = 255
DCH2_UP	15:8	rw	**Differential Channel 2 upper trigger level** 00_H min. threshold value = 0 FF_H max. threshold value = 255
DCH1_UP	7:0	rw	**Differential Channel 1 upper trigger level** 00_H min. threshold value = 0 FF_H max. threshold value = 255

Table 470 RESET of ADC1_DCHTH1_4_UPPER

Register Reset Type	Reset Values	Reset Short Name	Reset Mode	Note
RESET_TYPE_4	$0000\ 0000_H$	RESET_TYPE_4		

Upper Counter Trigger Level Channel 0-3

ADC1_CNT0_3_UPPER	Offset	Reset Value
Upper Counter Trigger Level Channel 0-3	$E8_H$	see Table 471

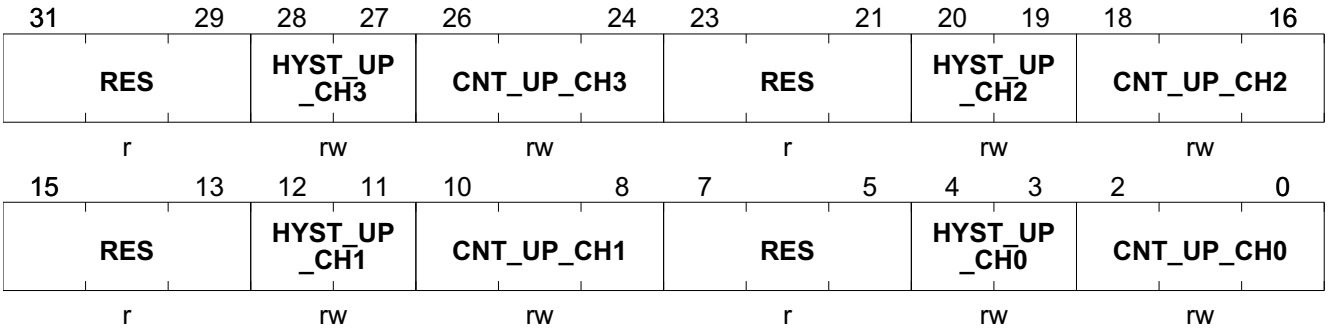

Field	Bits	Type	Description
RES	31:29	r	**Reserved** Always read as 0
HYST_UP_CH3	28:27	rw	**Channel 3 upper hysteresis** 0_H **HYSTOFF** hysteresis switched off 1_H **HYST4** hysteresis = 4 2_H **HYST8** hysteresis = 8 3_H **HYST16** hysteresis = 16
CNT_UP_CH3	26:24	rw	**Upper timer trigger threshold channel 3** 0_H 1 measurement 1_H 2 measurements 2_H 4 measurements 3_H 8 measurements 4_H 16 measurements 5_H 32 measurements 6_H 63 measurements 7_H 63 measurements
RES	23:21	r	**Reserved** Always read as 0
HYST_UP_CH2	20:19	rw	**Channel 2 upper hysteresis** 0_H **HYSTOFF** hysteresis switched off 1_H **HYST4** hysteresis = 4 2_H **HYST8** hysteresis = 8 3_H **HYST16** hysteresis = 16

Field	Bits	Type	Description
CNT_UP_CH2	18:16	rw	**Upper timer trigger threshold channel 2** 0_H 1 measurement 1_H 2 measurements 2_H 4 measurements 3_H 8 measurements 4_H 16 measurements 5_H 32 measurements 6_H 63 measurements 7_H 63 measurements
RES	15:13	r	**Reserved** Always read as 0
HYST_UP_CH1	12:11	rw	**Channel 1 upper hysteresis** 0_H **HYSTOFF** hysteresis switched off 1_H **HYST4** hysteresis = 4 2_H **HYST8** hysteresis = 8 3_H **HYST16** hysteresis = 16
CNT_UP_CH1	10:8	rw	**Upper timer trigger threshold channel 1** 0_H 1 measurement 1_H 2 measurements 2_H 4 measurements 3_H 8 measurements 4_H 16 measurements 5_H 32 measurements 6_H 63 measurements 7_H 63 measurements
RES	7:5	r	**Reserved** Always read as 0
HYST_UP_CH0	4:3	rw	**Channel 0 upper hysteresis** 0_H **HYSTOFF** hysteresis switched off 1_H **HYST4** hysteresis = 4 2_H **HYST8** hysteresis = 8 3_H **HYST16** hysteresis = 16
CNT_UP_CH0	2:0	rw	**Upper timer trigger threshold channel 0** 0_H 1 measurement 1_H 2 measurements 2_H 4 measurements 3_H 8 measurements 4_H 16 measurements 5_H 32 measurements 6_H 63 measurements 7_H 63 measurements

Table 471 RESET of ADC1_CNT0_3_UPPER

Register Reset Type	Reset Values	Reset Short Name	Reset Mode	Note
RESET_TYPE_4	1213 1B1A$_H$	RESET_TYPE_4		

Upper Counter Trigger Level Channel 4-7

ADC1_CNT4_7_UPPER	Offset	Reset Value
Upper Counter Trigger Level Channel 4-7	EC_H	see Table 472

31 29	28 27	26 24	23 21	20 19	18 16
RES	HYST_UP_CH7	CNT_UP_CH7	RES	HYST_UP_CH6	CNT_UP_CH6
r	rw	rw	r	rw	rw

15 13	12 11	10 8	7 5	4 3	2 0
RES	HYST_UP_CH5	CNT_UP_CH5	RES	HYST_UP_CH4	CNT_UP_CH4
r	rw	rw	r	rw	rw

Field	Bits	Type	Description
RES	31:29	r	**Reserved** Always read as 0
HYST_UP_CH7	28:27	rw	**Channel 7 upper hysteresis** 0_H **HYSTOFF** hysteresis switched off 1_H **HYST4** hysteresis = 4 2_H **HYST8** hysteresis = 8 3_H **HYST16** hysteresis = 16
CNT_UP_CH7	26:24	rw	**Upper timer trigger threshold channel 7** 0_H 1 measurement 1_H 2 measurements 2_H 4 measurements 3_H 8 measurements 4_H 16 measurements 5_H 32 measurements 6_H 63 measurements 7_H 63 measurements
RES	23:21	r	**Reserved** Always read as 0
HYST_UP_CH6	20:19	rw	**Channel 6 upper hysteresis** 0_H **HYSTOFF** hysteresis switched off 1_H **HYST4** hysteresis = 4 2_H **HYST8** hysteresis = 8 3_H **HYST16** hysteresis = 16

Field	Bits	Type	Description
CNT_UP_CH6	18:16	rw	**Upper timer trigger threshold channel 6** 0_H 1 measurement 1_H 2 measurements 2_H 4 measurements 3_H 8 measurements 4_H 16 measurements 5_H 32 measurements 6_H 63 measurements 7_H 63 measurements
RES	15:13	r	**Reserved** Always read as 0
HYST_UP_CH5	12:11	rw	**Channel 5 upper hysteresis** 0_H **HYSTOFF** hysteresis switched off 1_H **HYST4** hysteresis = 4 2_H **HYST8** hysteresis = 8 3_H **HYST16** hysteresis = 16
CNT_UP_CH5	10:8	rw	**Upper timer trigger threshold channel 5** 0_H 1 measurement 1_H 2 measurements 2_H 4 measurements 3_H 8 measurements 4_H 16 measurements 5_H 32 measurements 6_H 63 measurements 7_H 63 measurements
RES	7:5	r	**Reserved** Always read as 0
HYST_UP_CH4	4:3	rw	**Channel 4 upper hysteresis** 0_H **HYSTOFF** hysteresis switched off 1_H **HYST4** hysteresis = 4 2_H **HYST8** hysteresis = 8 3_H **HYST16** hysteresis = 16
CNT_UP_CH4	2:0	rw	**Upper timer trigger threshold channel 4** 0_H 1 measurement 1_H 2 measurements 2_H 4 measurements 3_H 8 measurements 4_H 16 measurements 5_H 32 measurements 6_H 63 measurements 7_H 63 measurements

Table 472 RESET of ADC1_CNT4_7_UPPER

Register Reset Type	Reset Values	Reset Short Name	Reset Mode	Note
RESET_TYPE_4	0000 0000_H	RESET_TYPE_4		

Upper Counter Trigger Level Channel 8-11

ADC1_CNT8_11_UPPER	Offset	Reset Value
Upper Counter Trigger Level Channel 8-11	$F0_H$	see Table 473

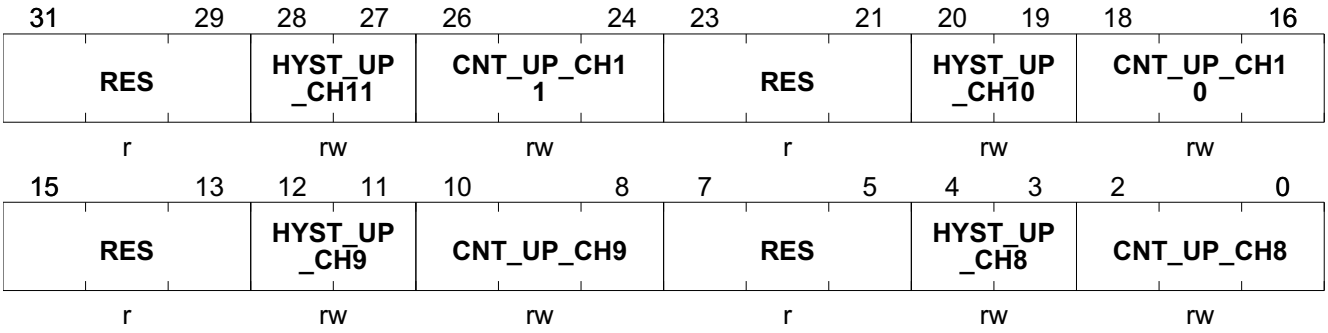

Field	Bits	Type	Description
RES	31:29	r	**Reserved** Always read as 0
HYST_UP_CH11	28:27	rw	**Channel 11 upper hysteresis** 0_H **HYSTOFF** hysteresis switched off 1_H **HYST4** hysteresis = 4 2_H **HYST8** hysteresis = 8 3_H **HYST16** hysteresis = 16
CNT_UP_CH11	26:24	rw	**Upper timer trigger threshold channel 11** 0_H 1 measurement 1_H 2 measurements 2_H 4 measurements 3_H 8 measurements 4_H 16 measurements 5_H 32 measurements 6_H 63 measurements 7_H 63 measurements
RES	23:21	r	**Reserved** Always read as 0
HYST_UP_CH10	20:19	rw	**Channel 10 upper hysteresis** 0_H **HYSTOFF** hysteresis switched off 1_H **HYST4** hysteresis = 4 2_H **HYST8** hysteresis = 8 3_H **HYST16** hysteresis = 16

Field	Bits	Type	Description
CNT_UP_CH10	18:16	rw	**Upper timer trigger threshold channel 10** 0_H 1 measurement 1_H 2 measurements 2_H 4 measurements 3_H 8 measurements 4_H 16 measurements 5_H 32 measurements 6_H 63 measurements 7_H 63 measurements
RES	15:13	r	**Reserved** Always read as 0
HYST_UP_CH9	12:11	rw	**Channel 9 upper hysteresis** 0_H **HYSTOFF** hysteresis switched off 1_H **HYST4** hysteresis = 4 2_H **HYST8** hysteresis = 8 3_H **HYST16** hysteresis = 16
CNT_UP_CH9	10:8	rw	**Upper timer trigger threshold channel 9** 0_H 1 measurement 1_H 2 measurements 2_H 4 measurements 3_H 8 measurements 4_H 16 measurements 5_H 32 measurements 6_H 63 measurements 7_H 63 measurements
RES	7:5	r	**Reserved** Always read as 0
HYST_UP_CH8	4:3	rw	**Channel 8 upper hysteresis** 0_H **HYSTOFF** hysteresis switched off 1_H **HYST4** hysteresis = 4 2_H **HYST8** hysteresis = 8 3_H **HYST16** hysteresis = 16
CNT_UP_CH8	2:0	rw	**Upper timer trigger threshold channel 8** 0_H 1 measurement 1_H 2 measurements 2_H 4 measurements 3_H 8 measurements 4_H 16 measurements 5_H 32 measurements 6_H 63 measurements 7_H 63 measurements

Table 473 RESET of ADC1_CNT8_11_UPPER

Register Reset Type	Reset Values	Reset Short Name	Reset Mode	Note
RESET_TYPE_4	0000 0000_H	RESET_TYPE_4		

Upper Counter Trigger Level Differential Channel 1-4

ADC1_DCHCNT1_4_UPPER	Offset	Reset Value
Upper Counter Trigger Level Differential Channel 1-4	$F4_H$	see Table 474

31 29	28 27	26 24	23 21	20 19	18 16
RES	HYST_UP_DCH4	CNT_UP_DCH4	RES	HYST_UP_DCH3	CNT_UP_DCH3
r	rw	rw	r	rw	rw

15 13	12 11	10 8	7 5	4 3	2 0
RES	HYST_UP_DCH2	CNT_UP_DCH2	RES	HYST_UP_DCH1	CNT_UP_DCH1
r	rw	rw	r	rw	rw

Field	Bits	Type	Description
RES	31:29	r	**Reserved** Always read as 0
HYST_UP_DCH4	28:27	rw	**Differential Channel 4 upper hysteresis** 0_H **HYSTOFF** hysteresis switched off 1_H **HYST4** hysteresis = 4 2_H **HYST8** hysteresis = 8 3_H **HYST16** hysteresis = 16
CNT_UP_DCH4	26:24	rw	**Upper timer trigger threshold differential channel 4** 0_H 1 measurement 1_H 2 measurements 2_H 4 measurements 3_H 8 measurements 4_H 15 measurements 5_H 15 measurements 6_H 15 measurements 7_H 15 measurements
RES	23:21	r	**Reserved** Always read as 0
HYST_UP_DCH3	20:19	rw	**Differential Channel 3 upper hysteresis** 0_H **HYSTOFF** hysteresis switched off 1_H **HYST4** hysteresis = 4 2_H **HYST8** hysteresis = 8 3_H **HYST16** hysteresis = 16

Field	Bits	Type	Description
CNT_UP_DCH3	18:16	rw	**Upper timer trigger threshold differential channel 3** 0_H 1 measurement 1_H 2 measurements 2_H 4 measurements 3_H 8 measurements 4_H 15 measurements 5_H 15 measurements 6_H 15 measurements 7_H 15 measurements
RES	15:13	r	**Reserved** Always read as 0
HYST_UP_DCH2	12:11	rw	**Differential Channel 2 upper hysteresis** 0_H **HYSTOFF** hysteresis switched off 1_H **HYST4** hysteresis = 4 2_H **HYST8** hysteresis = 8 3_H **HYST16** hysteresis = 16
CNT_UP_DCH2	10:8	rw	**Upper timer trigger threshold differential channel 2** 0_H 1 measurement 1_H 2 measurements 2_H 4 measurements 3_H 8 measurements 4_H 15 measurements 5_H 15 measurements 6_H 15 measurements 7_H 15 measurements
RES	7:5	r	**Reserved** Always read as 0
HYST_UP_DCH1	4:3	rw	**Differential Channel 1 upper hysteresis** 0_H **HYSTOFF** hysteresis switched off 1_H **HYST4** hysteresis = 4 2_H **HYST8** hysteresis = 8 3_H **HYST16** hysteresis = 16
CNT_UP_DCH1	2:0	rw	**Upper timer trigger threshold differential channel 1** 0_H 1 measurement 1_H 2 measurements 2_H 4 measurements 3_H 8 measurements 4_H 15 measurements 5_H 15 measurements 6_H 15 measurements 7_H 15 measurements

Table 474 RESET of ADC1_DCHCNT1_4_UPPER

Register Reset Type	Reset Values	Reset Short Name	Reset Mode	Note
RESET_TYPE_4	0000 0000_H	RESET_TYPE_4		

Lower Comparator Trigger Level Channel 0-3

ADC1_TH0_3_LOWER	Offset	Reset Value
Lower Comparator Trigger Level Channel 0-3	40_H	see Table 475

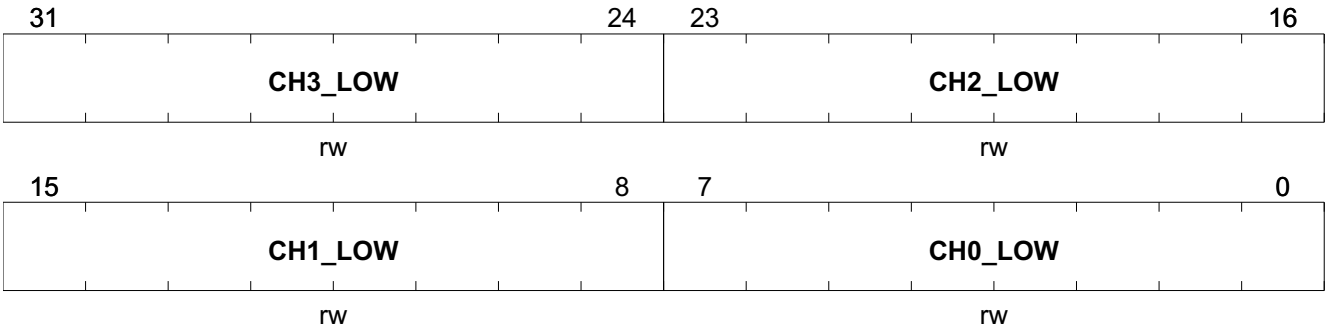

Field	Bits	Type	Description
CH3_LOW	31:24	rw	**Channel 3 lower trigger level** 00_H Min. threshold value FF_H Max. threshold value
CH2_LOW	23:16	rw	**Channel 2 lower trigger level** 00_H Min. threshold value FF_H Max. threshold value
CH1_LOW	15:8	rw	**Channel 1 lower trigger level** 00_H Min. threshold value FF_H Max. threshold value
CH0_LOW	7:0	rw	**Channel 0 lower trigger level** 00_H Min. threshold value FF_H Max. threshold value

Table 475 RESET of ADC1_TH0_3_LOWER

Register Reset Type	Reset Values	Reset Short Name	Reset Mode	Note
RESET_TYPE_4	1D2F 423A$_H$	RESET_TYPE_4		

Lower Comparator Trigger Level Channel 4-7

ADC1_TH4_7_LOWER	Offset	Reset Value
Lower Comparator Trigger Level Channel 4-7	44_H	see Table 476

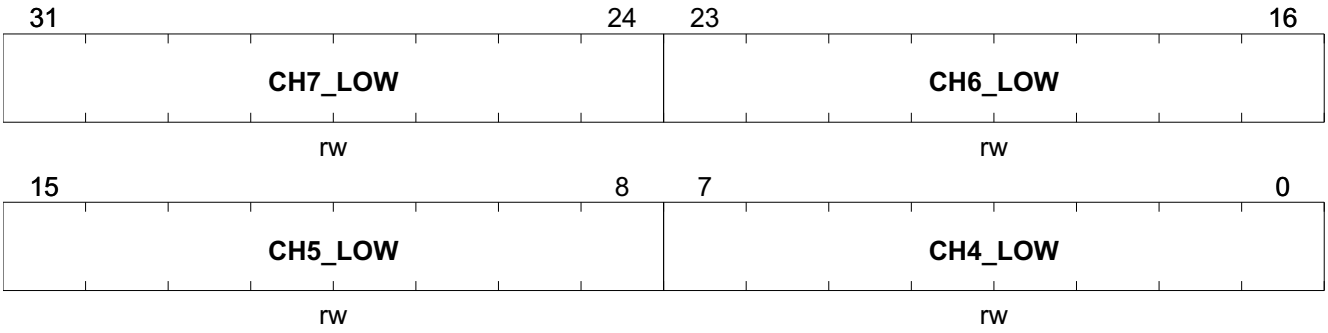

Field	Bits	Type	Description
CH7_LOW	31:24	rw	**Channel 7 lower trigger level** 00_H Min. threshold value FF_H Max. threshold value
CH6_LOW	23:16	rw	**Channel 6 lower trigger level** 00_H Min. threshold value FF_H Max. threshold value
CH5_LOW	15:8	rw	**Channel 5 lower trigger level** 00_H Min. threshold value FF_H Max. threshold value
CH4_LOW	7:0	rw	**Channel 4 lower trigger level** 00_H Min. threshold value FF_H Max. threshold value

Table 476 RESET of ADC1_TH4_7_LOWER

Register Reset Type	Reset Values	Reset Short Name	Reset Mode	Note
RESET_TYPE_4	$0000\ 0000_H$	RESET_TYPE_4		

Lower Comparator Trigger Level Channel 8-11

ADC1_TH8_11_LOWER	Offset	Reset Value
Lower Comparator Trigger Level Channel 8-11	$C0_H$	see Table 477

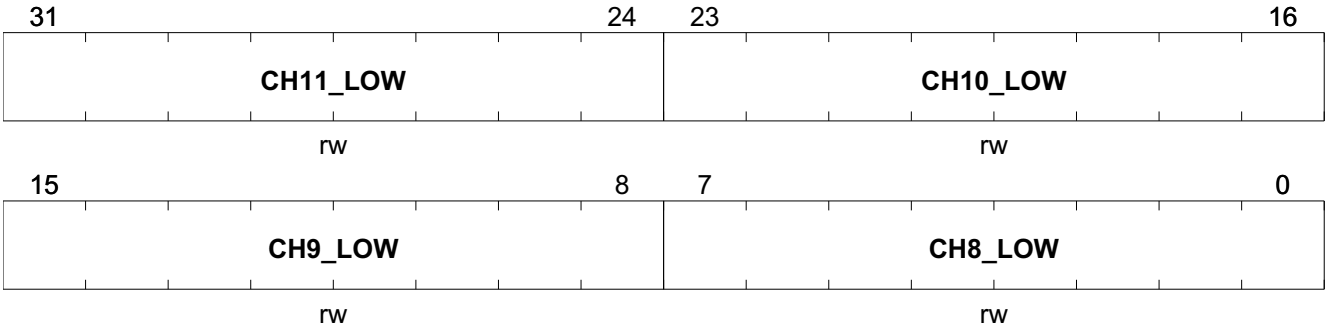

Field	Bits	Type	Description
CH11_LOW	31:24	rw	**Channel 11 lower trigger level** 00_H Min. threshold value FF_H Max. threshold value
CH10_LOW	23:16	rw	**Channel 10 lower trigger level** 00_H Min. threshold value FF_H Max. threshold value
CH9_LOW	15:8	rw	**Channel 9 lower trigger level** 00_H Min. threshold value FF_H Max. threshold value
CH8_LOW	7:0	rw	**Channel 8 lower trigger level** 00_H Min. threshold value FF_H Max. threshold value

Table 477 RESET of ADC1_TH8_11_LOWER

Register Reset Type	Reset Values	Reset Short Name	Reset Mode	Note
RESET_TYPE_4	$0000\ 0000_H$	RESET_TYPE_4		

Lower Comparator Trigger Level Differential Channel 1-4

ADC1_DCHTH1_4_LOWER	Offset	Reset Value
Lower Comparator Trigger Level Differential Channel 1-4	$C4_H$	see Table 478

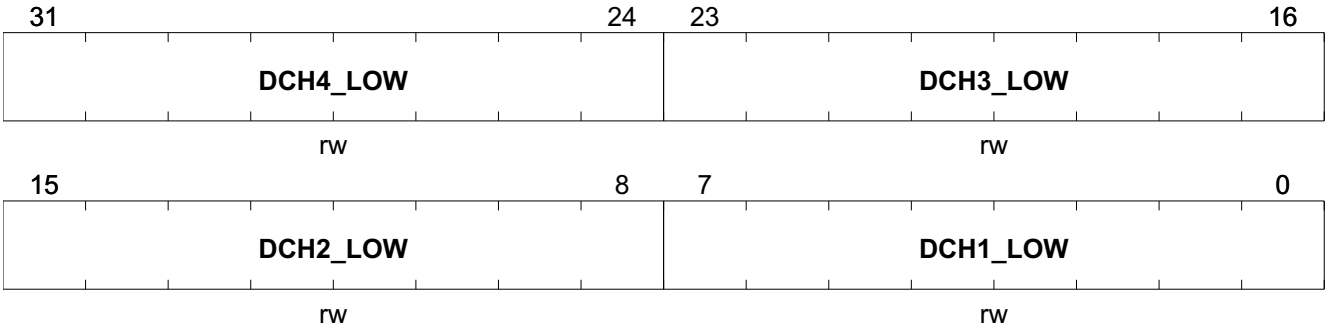

Field	Bits	Type	Description
DCH4_LOW	31:24	rw	**Differential Channel 4 lower trigger level** 00_H Min. threshold value FF_H Max. threshold value
DCH3_LOW	23:16	rw	**Differential Channel 3 lower trigger level** 00_H Min. threshold value FF_H Max. threshold value
DCH2_LOW	15:8	rw	**Differential Channel 2 lower trigger level** 00_H Min. threshold value FF_H Max. threshold value
DCH1_LOW	7:0	rw	**Differential Channel 1 lower trigger level** 00_H Min. threshold value FF_H Max. threshold value

Table 478 RESET of ADC1_DCHTH1_4_LOWER

Register Reset Type	Reset Values	Reset Short Name	Reset Mode	Note
RESET_TYPE_4	$0000\ 0000_H$	RESET_TYPE_4		

Lower Counter Trigger Level Channel 0-3

ADC1_CNT0_3_LOWER	Offset	Reset Value
Lower Counter Trigger Level Channel 0-3	$D8_H$	see Table 479

31 29	28 27	26 24	23 21	20 19	18 16
RES	HYST_LO_CH3	CNT_LO_CH3	RES	HYST_LO_CH2	CNT_LO_CH2
r	rw	rw	r	rw	rw

15 13	12 11	10 8	7 5	4 3	2 0
RES	HYST_LO_CH1	CNT_LO_CH1	RES	HYST_LO_CH0	CNT_LO_CH0
r	rw	rw	r	rw	rw

Field	Bits	Type	Description
RES	31:29	r	**Reserved** Always read as 0
HYST_LO_CH3	28:27	rw	**Channel 3 lower hysteresis** 0_H **HYSTOFF** hysteresis switched off 1_H **HYST4** hysteresis = 4 2_H **HYST8** hysteresis = 8 3_H **HYST16** hysteresis = 16
CNT_LO_CH3	26:24	rw	**Lower timer trigger threshold channel 3** 0_H 1 measurement 1_H 2 measurements 2_H 4 measurements 3_H 8 measurements 4_H 16 measurements 5_H 32 measurements 6_H 63 measurements 7_H 63 measurements
RES	23:21	r	**Reserved** Always read as 0
HYST_LO_CH2	20:19	rw	**Channel 2 lower hysteresis** 0_H **HYSTOFF** hysteresis switched off 1_H **HYST4** hysteresis = 4 2_H **HYST8** hysteresis = 8 3_H **HYST16** hysteresis = 16

Field	Bits	Type	Description
CNT_LO_CH2	18:16	rw	**Lower timer trigger threshold channel 2** 0_H 1 measurement 1_H 2 measurements 2_H 4 measurements 3_H 8 measurements 4_H 16 measurements 5_H 32 measurements 6_H 63 measurements 7_H 63 measurements
RES	15:13	r	**Reserved** Always read as 0
HYST_LO_CH1	12:11	rw	**Channel 1 lower hysteresis** 0_H **HYSTOFF** hysteresis switched off 1_H **HYST4** hysteresis = 4 2_H **HYST8** hysteresis = 8 3_H **HYST16** hysteresis = 16
CNT_LO_CH1	10:8	rw	**Lower timer trigger threshold channel 1** 0_H 1 measurement 1_H 2 measurements 2_H 4 measurements 3_H 8 measurements 4_H 16 measurements 5_H 32 measurements 6_H 63 measurements 7_H 63 measurements
RES	7:5	r	**Reserved** Always read as 0
HYST_LO_CH0	4:3	rw	**Channel 0 lower hysteresis** 0_H **HYSTOFF** hysteresis switched off 1_H **HYST4** hysteresis = 4 2_H **HYST8** hysteresis = 8 3_H **HYST16** hysteresis = 16
CNT_LO_CH0	2:0	rw	**Lower timer trigger threshold channel 0** 0_H 1 measurement 1_H 2 measurements 2_H 4 measurements 3_H 8 measurements 4_H 16 measurements 5_H 32 measurements 6_H 63 measurements 7_H 63 measurements

Table 479 RESET of ADC1_CNT0_3_LOWER

Register Reset Type	Reset Values	Reset Short Name	Reset Mode	Note
RESET_TYPE_4	1213 1312_H	RESET_TYPE_4		

Lower Counter Trigger Level Channel 4-7

ADC1_CNT4_7_LOWER	Offset	Reset Value
Lower Counter Trigger Level Channel 4-7	DC_H	see Table 480

31 29	28 27	26 24	23 21	20 19	18 16
RES	HYST_LO_CH7	CNT_LO_CH7	RES	HYST_LO_CH6	CNT_LO_CH6
r	rw	rw	r	rw	rw

15 13	12 11	10 8	7 5	4 3	2 0
RES	HYST_LO_CH5	CNT_LO_CH5	RES	HYST_LO_CH4	CNT_LO_CH4
r	rw	rw	r	rw	rw

Field	Bits	Type	Description
RES	31:29	r	**Reserved** Always read as 0
HYST_LO_CH7	28:27	rw	**Channel 7 lower hysteresis** 0_H **HYSTOFF** hysteresis switched off 1_H **HYST4** hysteresis = 4 2_H **HYST8** hysteresis = 8 3_H **HYST16** hysteresis = 16
CNT_LO_CH7	26:24	rw	**Lower timer trigger threshold channel 7** 0_H 1 measurement 1_H 2 measurements 2_H 4 measurements 3_H 8 measurements 4_H 16 measurements 5_H 32 measurements 6_H 63 measurements 7_H 63 measurements
RES	23:21	r	**Reserved** Always read as 0
HYST_LO_CH6	20:19	rw	**Channel 6 lower hysteresis** 0_H **HYSTOFF** hysteresis switched off 1_H **HYST4** hysteresis = 4 2_H **HYST8** hysteresis = 8 3_H **HYST16** hysteresis = 16

Field	Bits	Type	Description
CNT_LO_CH6	18:16	rw	**Lower timer trigger threshold channel 6** 0_H 1 measurement 1_H 2 measurements 2_H 4 measurements 3_H 8 measurements 4_H 16 measurements 5_H 32 measurements 6_H 63 measurements 7_H 63 measurements
RES	15:13	r	**Reserved** Always read as 0
HYST_LO_CH5	12:11	rw	**Channel 5 lower hysteresis** 0_H **HYSTOFF** hysteresis switched off 1_H **HYST4** hysteresis = 4 2_H **HYST8** hysteresis = 8 3_H **HYST16** hysteresis = 16
CNT_LO_CH5	10:8	rw	**Lower timer trigger threshold channel 5** 0_H 1 measurement 1_H 2 measurements 2_H 4 measurements 3_H 8 measurements 4_H 16 measurements 5_H 32 measurements 6_H 63 measurements 7_H 63 measurements
RES	7:5	r	**Reserved** Always read as 0
HYST_LO_CH4	4:3	rw	**Channel 4 lower hysteresis** 0_H **HYSTOFF** hysteresis switched off 1_H **HYST4** hysteresis = 4 2_H **HYST8** hysteresis = 8 3_H **HYST16** hysteresis = 16
CNT_LO_CH4	2:0	rw	**Lower timer trigger threshold channel 4** 0_H 1 measurement 1_H 2 measurements 2_H 4 measurements 3_H 8 measurements 4_H 16 measurements 5_H 32 measurements 6_H 63 measurements 7_H 63 measurements

Table 480 RESET of ADC1_CNT4_7_LOWER

Register Reset Type	Reset Values	Reset Short Name	Reset Mode	Note
RESET_TYPE_4	0000 0000_H	RESET_TYPE_4		

Lower Counter Trigger Level Channel 8-11

ADC1_CNT8_11_LOWER	Offset	Reset Value
Lower Counter Trigger Level Channel 8-11	$E0_H$	see Table 481

31 29	28 27	26 24	23 21	20 19	18 16
RES	HYST_LO_CH11	CNT_LO_CH11	RES	HYST_LO_CH10	CNT_LO_CH10
r	rw	rw	r	rw	rw

15 13	12 11	10 8	7 5	4 3	2 0
RES	HYST_LO_CH9	CNT_LO_CH9	RES	HYST_LO_CH8	CNT_LO_CH8
r	rw	rw	r	rw	rw

Field	Bits	Type	Description
RES	31:29	r	**Reserved** Always read as 0
HYST_LO_CH11	28:27	rw	**Channel 11 lower hysteresis** 0_H **HYSTOFF** hysteresis switched off 1_H **HYST4** hysteresis = 4 2_H **HYST8** hysteresis = 8 3_H **HYST16** hysteresis = 16
CNT_LO_CH11	26:24	rw	**Lower timer trigger threshold channel 11** 0_H 1 measurement 1_H 2 measurements 2_H 4 measurements 3_H 8 measurements 4_H 16 measurements 5_H 32 measurements 6_H 63 measurements 7_H 63 measurements
RES	23:21	r	**Reserved** Always read as 0
HYST_LO_CH10	20:19	rw	**Channel 10 lower hysteresis** 0_H **HYSTOFF** hysteresis switched off 1_H **HYST4** hysteresis = 4 2_H **HYST8** hysteresis = 8 3_H **HYST16** hysteresis = 16

Field	Bits	Type	Description
CNT_LO_CH10	18:16	rw	**Lower timer trigger threshold channel 10** 0_H 1 measurement 1_H 2 measurements 2_H 4 measurements 3_H 8 measurements 4_H 16 measurements 5_H 32 measurements 6_H 63 measurements 7_H 63 measurements
RES	15:13	r	**Reserved** Always read as 0
HYST_LO_CH9	12:11	rw	**Channel 9 lower hysteresis** 0_H **HYSTOFF** hysteresis switched off 1_H **HYST4** hysteresis = 4 2_H **HYST8** hysteresis = 8 3_H **HYST16** hysteresis = 16
CNT_LO_CH9	10:8	rw	**Lower timer trigger threshold channel 9** 0_H 1 measurement 1_H 2 measurements 2_H 4 measurements 3_H 8 measurements 4_H 16 measurements 5_H 32 measurements 6_H 63 measurements 7_H 63 measurements
RES	7:5	r	**Reserved** Always read as 0
HYST_LO_CH8	4:3	rw	**Channel 8 lower hysteresis** 0_H **HYSTOFF** hysteresis switched off 1_H **HYST4** hysteresis = 4 2_H **HYST8** hysteresis = 8 3_H **HYST16** hysteresis = 16
CNT_LO_CH8	2:0	rw	**Lower timer trigger threshold channel 8** 0_H 1 measurement 1_H 2 measurements 2_H 4 measurements 3_H 8 measurements 4_H 16 measurements 5_H 32 measurements 6_H 63 measurements 7_H 63 measurements

Table 481 RESET of ADC1_CNT8_11_LOWER

Register Reset Type	Reset Values	Reset Short Name	Reset Mode	Note
RESET_TYPE_4	0000 0000_H	RESET_TYPE_4		

Lower Counter Trigger Level Differential Channel 1-4

ADC1_DCHCNT1_4_LOWER	Offset	Reset Value
Lower Counter Trigger Level Differential Channel 1-4	$E4_H$	see Table 482

31	30	29	28	27	26	25	24	23	22	21	20	19	18	17	16
RES			HYST_LO_DCH4		CNT_LO_DCH4			RES			HYST_LO_DCH3		CNT_LO_DCH3		
r			rw		rw			r			rw		rw		

15	14	13	12	11	10	9	8	7	6	5	4	3	2	1	0
RES			HYST_LO_DCH2		CNT_LO_DCH2			RES			HYST_LO_DCH1		CNT_LO_DCH1		
r			rw		rw			r			rw		rw		

Field	Bits	Type	Description
RES	31:29	r	**Reserved** Always read as 0
HYST_LO_DCH4	28:27	rw	**Differential Channel 4 lower hysteresis** 0_H **HYSTOFF** hysteresis switched off 1_H **HYST4** hysteresis = 4 2_H **HYST8** hysteresis = 8 3_H **HYST16** hysteresis = 16
CNT_LO_DCH4	26:24	rw	**Lower timer trigger threshold differential channel 4** 0_H 1 measurement 1_H 2 measurements 2_H 4 measurements 3_H 8 measurements 4_H 16 measurements 5_H 32 measurements 6_H 63 measurements 7_H 63 measurements
RES	23:21	r	**Reserved** Always read as 0
HYST_LO_DCH3	20:19	rw	**Differential Channel 3 lower hysteresis** 0_H **HYSTOFF** hysteresis switched off 1_H **HYST4** hysteresis = 4 2_H **HYST8** hysteresis = 8 3_H **HYST16** hysteresis = 16

Field	Bits	Type	Description
CNT_LO_DCH3	18:16	rw	**Lower timer trigger threshold differential channel 3** 0_H 1 measurement 1_H 2 measurements 2_H 4 measurements 3_H 8 measurements 4_H 16 measurements 5_H 32 measurements 6_H 63 measurements 7_H 63 measurements
RES	15:13	r	**Reserved** Always read as 0
HYST_LO_DCH2	12:11	rw	**Differential Channel 2 lower hysteresis** 0_H **HYSTOFF** hysteresis switched off 1_H **HYST4** hysteresis = 4 2_H **HYST8** hysteresis = 8 3_H **HYST16** hysteresis = 16
CNT_LO_DCH2	10:8	rw	**Lower timer trigger threshold differential channel 2** 0_H 1 measurement 1_H 2 measurements 2_H 4 measurements 3_H 8 measurements 4_H 16 measurements 5_H 32 measurements 6_H 63 measurements 7_H 63 measurements
RES	7:5	r	**Reserved** Always read as 0
HYST_LO_DCH1	4:3	rw	**Differential Channel 1 lower hysteresis** 0_H **HYSTOFF** hysteresis switched off 1_H **HYST4** hysteresis = 4 2_H **HYST8** hysteresis = 8 3_H **HYST16** hysteresis = 16
CNT_LO_DCH1	2:0	rw	**Lower timer trigger threshold differential channel 1** 0_H 1 measurement 1_H 2 measurements 2_H 4 measurements 3_H 8 measurements 4_H 16 measurements 5_H 32 measurements 6_H 63 measurements 7_H 63 measurements

Table 482 RESET of ADC1_DCHCNT1_4_LOWER

Register Reset Type	Reset Values	Reset Short Name	Reset Mode	Note
RESET_TYPE_4	0000 0000_H	RESET_TYPE_4		

24.9 Interrupt Handling

24.9.1 Functional Description

Figure 204 shows the interrupt generation of ADC1.The generated interrupts are assigned to several nodes. The exact mapping can be red in the corresponding interrupt chapter of this device.

Note: all status flags and interrupt status flags are blanked within the startup procedure of the sequencer. The purpose of this is to avoid wrong setting of those flags due to settling behaviour of the integrated filter structures.

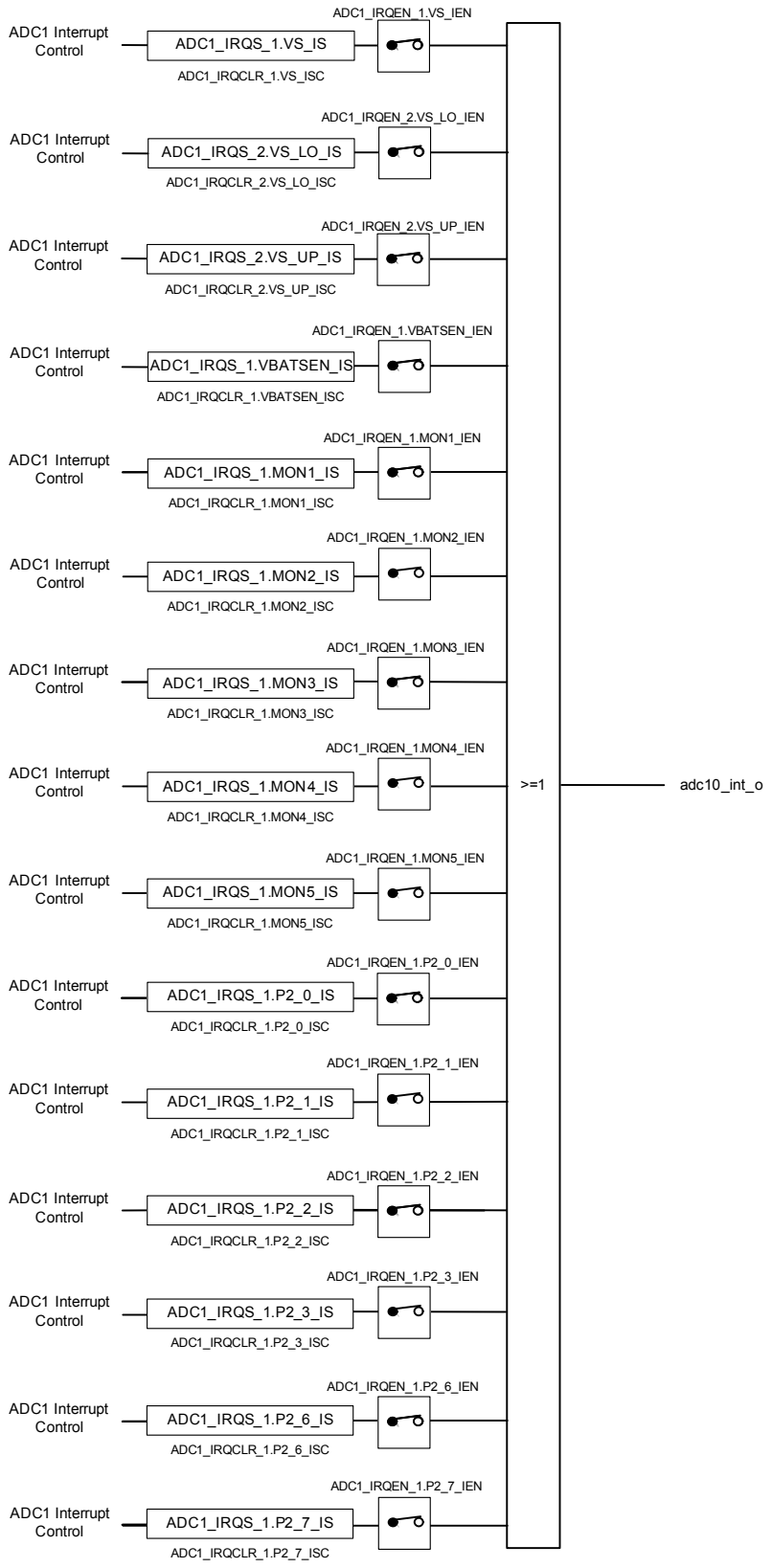

Figure 204 ADC1 Interrupt Generation of all existing channels

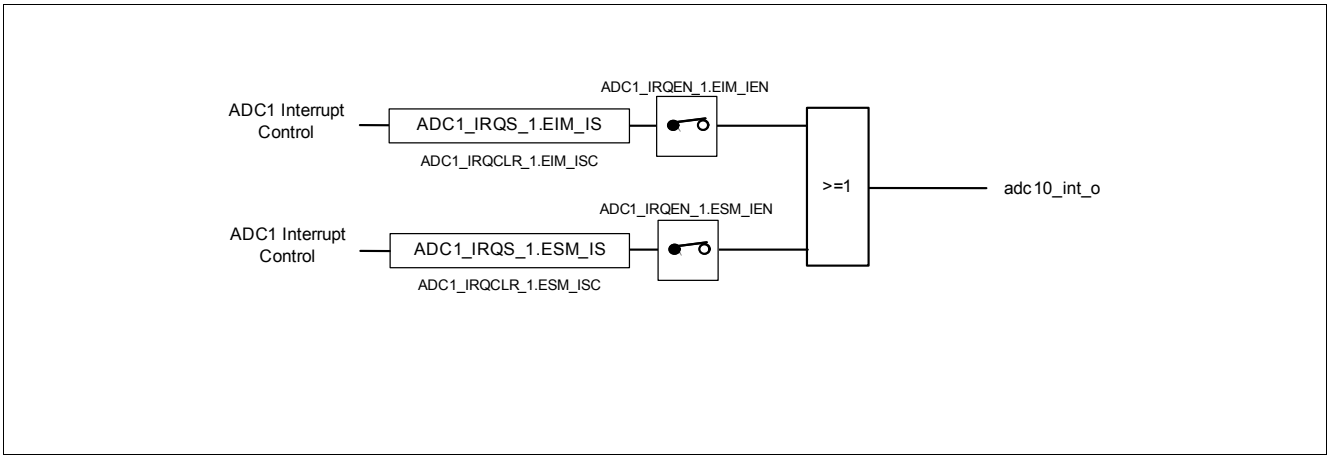

Figure 205 ADC1 Interrupt Generation for EIM and ESM Mode

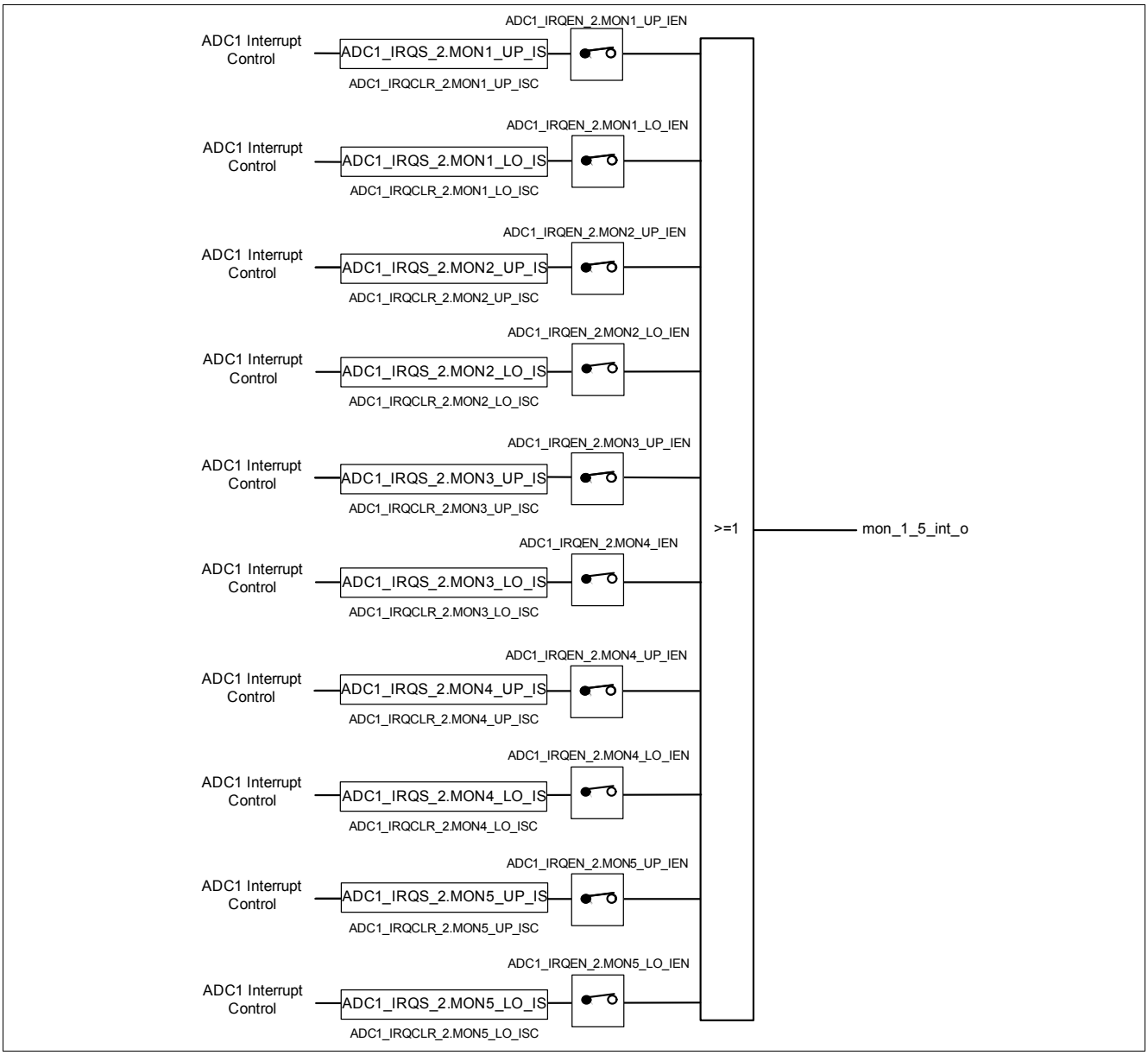

Figure 206 ADC1 Interrupt Generation for Monitoring Input

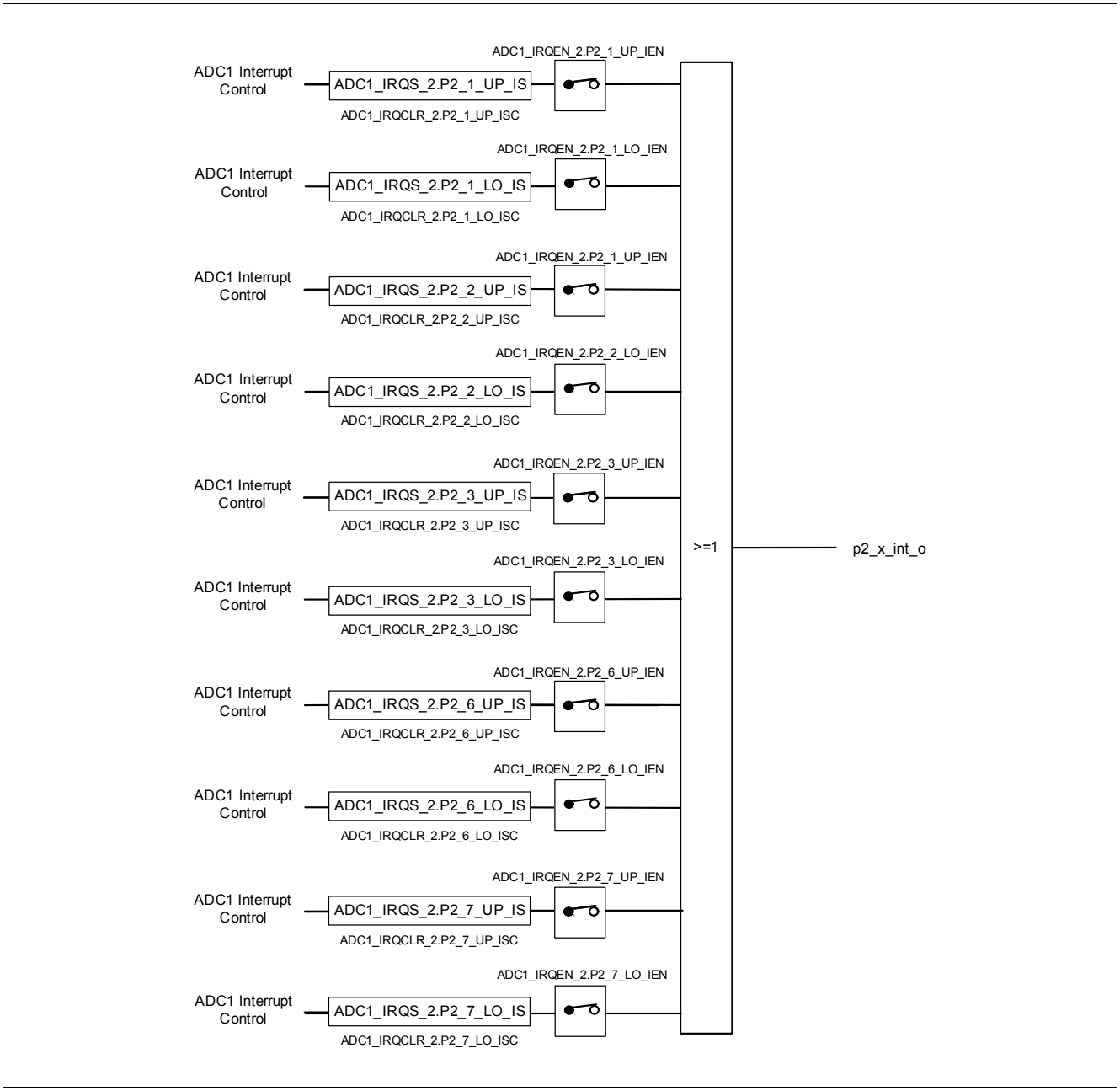

Figure 207 ADC1 Interrupt Generation for Port 2 Input

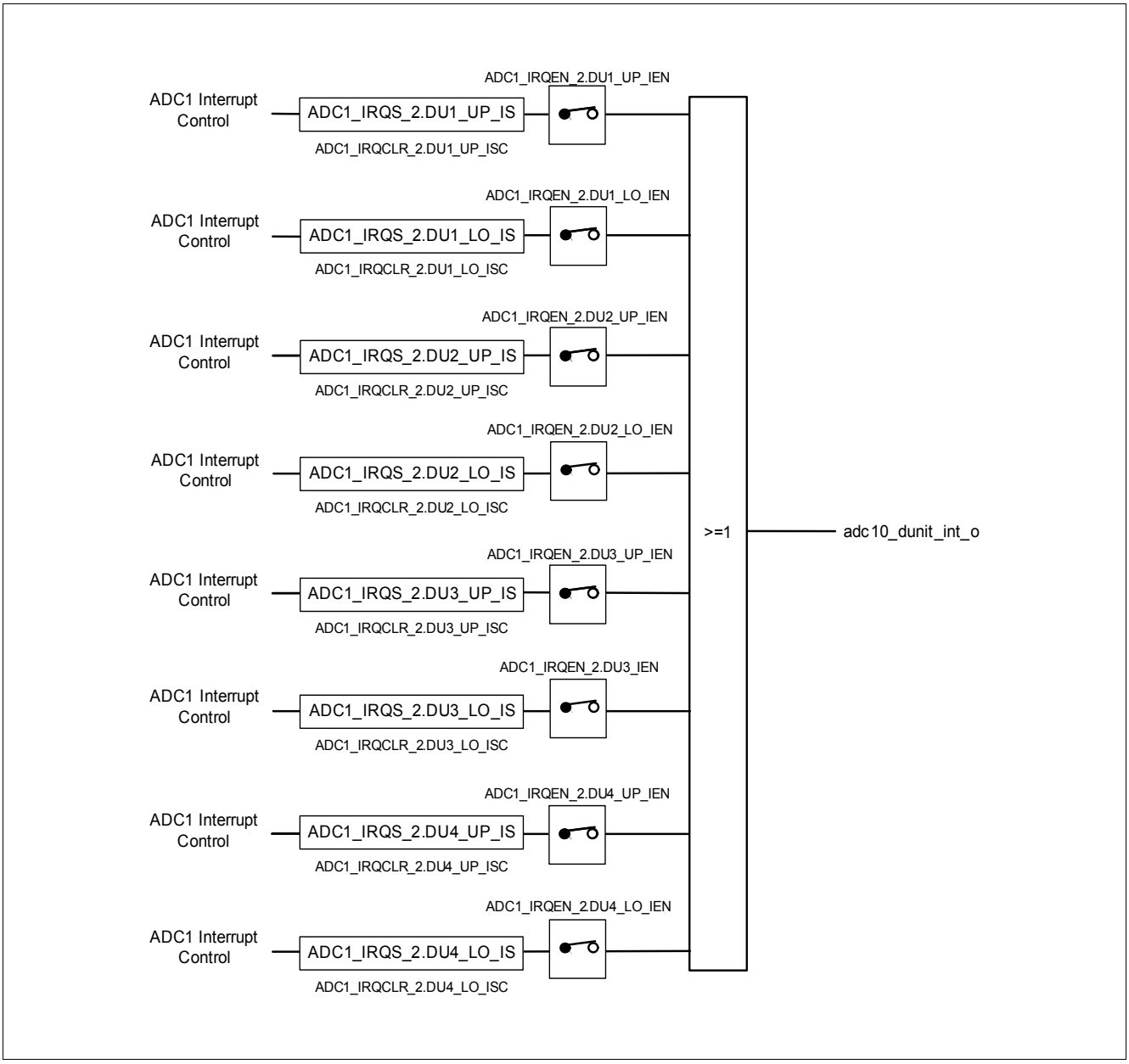

Figure 208 ADC1 Interrupt Generation for Differential Unit

24.9.2 Interrupt Registers

Table 483 Register Overview

Register Short Name	Register Long Name	Offset Address	Reset Value
Interrupt Registers,			
ADC1_IRQS_1	ADC1 Interrupt Status 1 Register	64_H	$0000\ 0000_H$
ADC1_IRQS_2	ADC1 Interrupt Status 2 Register	100_H	$0000\ 0000_H$
ADC1_STS_1	ADC1 Status 1 Register	124_H	$0000\ 0000_H$
ADC1_STS_2	ADC1 Status 2 Register	104_H	$0000\ 0000_H$
ADC1_STSCLR_1	ADC1 Status Clear 1 Register	128_H	$0000\ 0000_H$
ADC1_IRQCLR_1	ADC1 Interrupt Status Clear 1 Register	$6C_H$	$0000\ 0000_H$
ADC1_IRQCLR_2	ADC1 Interrupt Status Clear 2 Register	108_H	$0000\ 0000_H$
ADC1_IRQEN_1	ADC1 Interrupt Enable 1 Register	68_H	$0000\ 0000_H$
ADC1_IRQEN_2	ADC1 Interrupt Enable 2 Register	$10C_H$	$0000\ 0000_H$

The registers are addressed wordwise.

Measurement Unit 1 Interrupt Status 1 Register

ADC1_IRQS_1	Offset	Reset Value
ADC1 Interrupt Status 1 Register	64_H	see Table 484

31	30	29	28	27	26	25	24	23	18	17	16
DU4UP_IS	DU4LO_IS	DU3UP_IS	DU3LO_IS	DU2UP_IS	DU2LO_IS	DU1UP_IS	DU1LO_IS	RES		ESM_IS	EIM_IS
rwhxre	rwhxre	rwhxre	rwhxre	rwhxre	rwhxre	rwhxre	rwhxre	r		rwhxre	rwhxre

15	13	12	11	10	9	8	7	6	5	4	3	2	1	0
RES		P2_0_IS	P2_7_IS	P2_6_IS	P2_3_IS	P2_2_IS	P2_1_IS	MON5_IS	MON4_IS	MON3_IS	MON2_IS	MON1_IS	VS_IS	VBATSEN*
r		rwhxre	rwhxre	rwhxre	rwhxre	rwhxre	rwhxre	rwhxre	rwhxre	rwhxre	rwhxre	rwhxre	rwhxre	rwhxre

Field	Bits	Type	Description
DU4UP_IS	31	rwhxre	**ADC1 Differential Unit 4 (DU4) upper Channel Interrupt Status** Conversion of Channel has finished 0_B **INACTIVE** No DU upper Channel Interrupt has occurred 1_B **ACTIVE** DU upper Channel Interrupt has occurred
DU4LO_IS	30	rwhxre	**ADC1 Differential Unit 4 (DU4) lower Channel Interrupt Status** Conversion of Channel has finished 0_B **INACTIVE** No DU lower Channel Interrupt has occurred 1_B **ACTIVE** DU lower Channel Interrupt has occurred
DU3UP_IS	29	rwhxre	**ADC1 Differential Unit 3 (DU3) upper Channel Interrupt Status** Conversion of Channel has finished 0_B **INACTIVE** No DU upper Channel Interrupt has occurred 1_B **ACTIVE** DU upper Channel Interrupt has occurred
DU3LO_IS	28	rwhxre	**ADC1 Differential Unit 3 (DU3) lower Channel Interrupt Status** Conversion of Channel has finished 0_B **INACTIVE** No DU lower Channel Interrupt has occurred 1_B **ACTIVE** DU lower Channel Interrupt has occurred
DU2UP_IS	27	rwhxre	**ADC1 Differential Unit 2 (DU2) upper Channel Interrupt Status** Conversion of Channel has finished 0_B **INACTIVE** No DU upper Channel Interrupt has occurred 1_B **ACTIVE** DU upper Channel Interrupt has occurred

Field	Bits	Type	Description
DU2LO_IS	26	rwhxre	**ADC1 Differential Unit 2 (DU2) lower Channel Interrupt Status** Conversion of Channel has finished 0_B **INACTIVE** No DU lower Channel Interrupt has occurred 1_B **ACTIVE** DU lower Channel Interrupt has occurred
DU1UP_IS	25	rwhxre	**ADC1 Differential Unit 1 (DU1) upper Channel Interrupt Status** Conversion of Channel has finished 0_B **INACTIVE** No DU upper Channel Interrupt has occurred 1_B **ACTIVE** DU upper Channel Interrupt has occurred
DU1LO_IS	24	rwhxre	**ADC1 Differential Unit 1 (DU1) lower Channel Interrupt Status** Conversion of Channel has finished 0_B **INACTIVE** No DU lower Channel Interrupt has occurred 1_B **ACTIVE** DU lower Channel Interrupt has occurred
RES	23:18	r	**Reserved** Always read as 0
ESM_IS	17	rwhxre	**Exceptional Sequence Measurement (ESM) Status** 0_B **INACTIVE** No ESM has occurred 1_B **ACTIVE** ESM occurred
EIM_IS	16	rwhxre	**Exceptional Interrupt Measurement (EIM) Status** 0_B **INACTIVE** No EIM occurred 1_B **ACTIVE** EIM occurred
RES	15:13	r	**Reserved** Always read as 0
P2_0_IS	12	rwhxre	**ADC1 Channel 12 Interrupt Status** Conversion of Channel has finished 0_B **INACTIVE** No Channel 12 Interrupt has occurred 1_B **ACTIVE** Channel 12 Interrupt has occurred
P2_7_IS	11	rwhxre	**ADC1 Channel 11 Interrupt Status** Conversion of Channel has finished 0_B **INACTIVE** No Channel 11 Interrupt has occurred 1_B **ACTIVE** Channel 11 Interrupt has occurred
P2_6_IS	10	rwhxre	**ADC1 Channel 10 Interrupt Status** Conversion of Channel has finished 0_B **INACTIVE** No Channel 10 Interrupt has occurred 1_B **ACTIVE** Channel 10 Interrupt has occurred
P2_3_IS	9	rwhxre	**ADC1 Channel 9 Interrupt Status** Conversion of Channel has finished 0_B **INACTIVE** No Channel 9 Interrupt has occurred 1_B **ACTIVE** Channel 9 Interrupt has occurred

Field	Bits	Type	Description
P2_2_IS	8	rwhxre	**ADC1 Channel 8 Interrupt Status** Conversion of Channel has finished 0_B **INACTIVE** No Channel 8 Interrupt has occurred 1_B **ACTIVE** Channel 8 Interrupt has occurred
P2_1_IS	7	rwhxre	**ADC1 Channel 7 Interrupt Status** Conversion of Channel has finished 0_B **INACTIVE** No Channel 7 Interrupt has occurred 1_B **ACTIVE** Channel 7 Interrupt has occurred
MON5_IS	6	rwhxre	**ADC1 Channel 6 Interrupt Status** Conversion of Channel has finished 0_B **INACTIVE** No Channel 6 Interrupt has occurred 1_B **ACTIVE** Channel 6 Interrupt has occurred
MON4_IS	5	rwhxre	**ADC1 Channel 5 Interrupt Status** Conversion of Channel has finished 0_B **INACTIVE** No Channel 5 Interrupt has occurred 1_B **ACTIVE** Channel 5 Interrupt has occurred
MON3_IS	4	rwhxre	**ADC1 Channel 4 Interrupt Status** Conversion of Channel has finished 0_B **INACTIVE** No Channel 4 Interrupt has occurred 1_B **ACTIVE** Channel 4 Interrupt has occurred
MON2_IS	3	rwhxre	**ADC1 Channel 3 Interrupt Status** Conversion of Channel has finished 0_B **INACTIVE** No Channel 3 Interrupt has occurred 1_B **ACTIVE** Channel 3 Interrupt has occurred
MON1_IS	2	rwhxre	**ADC1 Channel 2 Interrupt Status** Conversion of Channel has finished 0_B **INACTIVE** No Channel 2 Interrupt has occurred 1_B **ACTIVE** Channel 2 Interrupt has occurred
VS_IS	1	rwhxre	**ADC1 Channel 0 Interrupt Status** Conversion of Channel has finished 0_B **INACTIVE** No Channel 0 Interrupt has occurred 1_B **ACTIVE** Channel 0 Interrupt has occurred
VBATSEN_IS	0	rwhxre	**ADC1 Channel 1 Interrupt Status** Conversion of Channel has finished 0_B **INACTIVE** No Channel 1 Interrupt has occurred 1_B **ACTIVE** Channel 1 Interrupt has occurred

Table 484 RESET of ADC1_IRQS_1

Register Reset Type	Reset Values	Reset Short Name	Reset Mode	Note
RESET_TYPE_3	$0000\ 0000_H$	RESET_TYPE_3		

Measurement Unit 1 Status 2 Register

ADC1_IRQS_2	Offset	Reset Value
ADC1 Interrupt Status 2 Register	100_H	see Table 484

31	30	29	28	27	26	25	24	23	22	21	20	19	18	17	16
RES				P2_7_UP*	P2_6_UP*	P2_3_UP*	P2_2_UP*	P2_1_UP*	MON5_UP*	MON4_UP*	MON3_UP*	MON2_UP*	MON1_UP*	VS_UP_IS	RES
r				rwhxre	rwhxre	rwhxre	rwhxre	rwhxre	rwhxre	rwhxre	rwhxre	rwhxre	rwhxre	rwhxre	r

15	14	13	12	11	10	9	8	7	6	5	4	3	2	1	0
RES				P2_7_LO*	P2_6_LO*	P2_3_LO*	P2_2_LO*	P2_1_LO*	MON5_LO*	MON4_LO*	MON3_LO*	MON2_LO*	MON1_LO*	VS_LO_IS	RES
r				rwhxre	rwhxre	rwhxre	rwhxre	rwhxre	rwhxre	rwhxre	rwhxre	rwhxre	rwhxre	rwhxre	r

Field	Bits	Type	Description
RES	31:28	r	**Reserved** Always read as 0
P2_7_UP_IS	27	rwhxre	**ADC1 Port 2.7 Upper Threshold Interrupt Status** 0_B **INACTIVE** no interrupt has occurred 1_B **ACTIVE** interrupt has occurred
P2_6_UP_IS	26	rwhxre	**ADC1 Port 2.6 Upper Threshold Interrupt Status** 0_B **INACTIVE** no interrupt has occurred 1_B **ACTIVE** interrupt has occurred
P2_3_UP_IS	25	rwhxre	**ADC1 Port 2.3 Upper Threshold Interrupt Status** 0_B **INACTIVE** no interrupt has occurred 1_B **ACTIVE** interrupt has occurred
P2_2_UP_IS	24	rwhxre	**ADC1 Port 2.2 Upper Threshold Interrupt Status** 0_B **INACTIVE** no interrupt has occurred 1_B **ACTIVE** interrupt has occurred
P2_1_UP_IS	23	rwhxre	**ADC1 Port 2.1 Upper Threshold Interrupt Status** 0_B **INACTIVE** no interrupt has occurred 1_B **ACTIVE** interrupt has occurred
MON5_UP_IS	22	rwhxre	**ADC1 MON 5 Upper Threshold Interrupt Status** 0_B **INACTIVE** no interrupt has occurred 1_B **ACTIVE** interrupt has occurred
MON4_UP_IS	21	rwhxre	**ADC1 MON 4 Upper Threshold Interrupt Status** 0_B **INACTIVE** no interrupt has occurred 1_B **ACTIVE** interrupt has occurred
MON3_UP_IS	20	rwhxre	**ADC1 MON 3 Upper Threshold Interrupt Status** 0_B **INACTIVE** no interrupt has occurred 1_B **ACTIVE** interrupt has occurred
MON2_UP_IS	19	rwhxre	**ADC1 MON 2 Upper Threshold Interrupt Status** 0_B **INACTIVE** no interrupt has occurred 1_B **ACTIVE** interrupt has occurred

Field	Bits	Type	Description
MON1_UP_IS	18	rwhxre	**ADC1 MON 1 Upper Threshold Interrupt Status** 0_B **INACTIVE** no interrupt has occurred 1_B **ACTIVE** interrupt has occurred
VS_UP_IS	17	rwhxre	**ADC1 VS Upper Threshold Interrupt Status** 0_B **INACTIVE** no interrupt has occurred 1_B **ACTIVE** interrupt has occurred
RES	16:12	r	**Reserved** Always read as 0
P2_7_LO_IS	11	rwhxre	**ADC1 Port 2.7 Lower Threshold Interrupt Status** 0_B **INACTIVE** no interrupt has occurred 1_B **ACTIVE** interrupt has occurred
P2_6_LO_IS	10	rwhxre	**ADC1 Port 2.6 Lower Threshold Interrupt Status** 0_B **INACTIVE** no interrupt has occurred 1_B **ACTIVE** interrupt has occurred
P2_3_LO_IS	9	rwhxre	**ADC1 Port 2.3 Lower Threshold Interrupt Status** 0_B **INACTIVE** no interrupt has occurred 1_B **ACTIVE** interrupt has occurred
P2_2_LO_IS	8	rwhxre	**ADC1 Port 2.2 Lower Threshold Interrupt Status** 0_B **INACTIVE** no interrupt has occurred 1_B **ACTIVE** interrupt has occurred
P2_1_LO_IS	7	rwhxre	**ADC1 Port 2.1 Lower Threshold Interrupt Status** 0_B **INACTIVE** no interrupt has occurred 1_B **ACTIVE** interrupt has occurred
MON5_LO_IS	6	rwhxre	**ADC1 MON 5 Lower Threshold Interrupt Status** 0_B **INACTIVE** no interrupt has occurred 1_B **ACTIVE** interrupt has occurred
MON4_LO_IS	5	rwhxre	**ADC1 MON 4 Lower Threshold Interrupt Status** 0_B **INACTIVE** no interrupt has occurred 1_B **ACTIVE** interrupt has occurred
MON3_LO_IS	4	rwhxre	**ADC1 MON 3 Lower Threshold Interrupt Status** 0_B **INACTIVE** no interrupt has occurred 1_B **ACTIVE** interrupt has occurred
MON2_LO_IS	3	rwhxre	**ADC1 MON 2 Lower Threshold Interrupt Status** 0_B **INACTIVE** no interrupt has occurred 1_B **ACTIVE** interrupt has occurred
MON1_LO_IS	2	rwhxre	**ADC1 MON 1 Lower Threshold Interrupt Status** 0_B **INACTIVE** no interrupt has occurred 1_B **ACTIVE** interrupt has occurred
VS_LO_IS	1	rwhxre	**ADC1 VS Lower Threshold Interrupt Status** 0_B **INACTIVE** no interrupt has occurred 1_B **ACTIVE** interrupt has occurred
RES	0	r	**Reserved** Always read as 0

Table 485 RESET of ADC1_IRQS_1

Register Reset Type	Reset Values	Reset Short Name	Reset Mode	Note
RESET_TYPE_3	$0000\ 0000_H$	RESET_TYPE_3		

Measurement Unit 1 Status 1 Register

ADC1_STS_1	Offset	Reset Value
ADC1 Status 1 Register	124_H	see Table 486

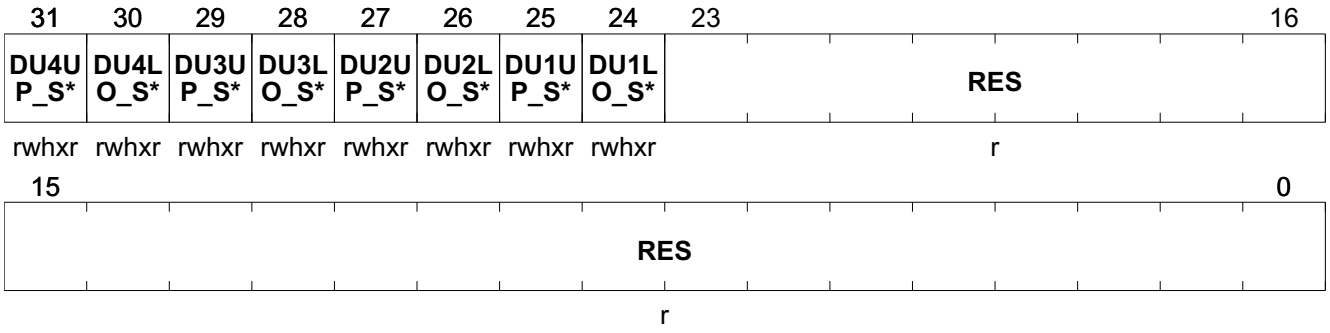

Field	Bits	Type	Description
DU4UP_STS	31	rwhxr	**ADC1 Differential Unit 4 (DU4) upper Channel Status** Conversion of Channel has finished 0_B **INACTIVE** No DU upper Channel Status has occurred 1_B **ACTIVE** DU upper Channel Status has occurred
DU4LO_STS	30	rwhxr	**ADC1 Differential Unit 4 (DU4) lower Channel Status** Conversion of Channel has finished 0_B **INACTIVE** No DU lower Channel Status has occurred 1_B **ACTIVE** DU lower Channel Status has occurred
DU3UP_STS	29	rwhxr	**ADC1 Differential Unit 3 (DU3) upper Channel Status** Conversion of Channel has finished 0_B **INACTIVE** No DU upper Channel Status has occurred 1_B **ACTIVE** DU upper Channel Status has occurred
DU3LO_STS	28	rwhxr	**ADC1 Differential Unit 3 (DU3) lower Channel Status** Conversion of Channel has finished 0_B **INACTIVE** No DU lower Channel Status has occurred 1_B **ACTIVE** DU lower Channel Status has occurred
DU2UP_STS	27	rwhxr	**ADC1 Differential Unit 2 (DU2) upper Channel Status** Conversion of Channel has finished 0_B **INACTIVE** No DU upper Channel Status has occurred 1_B **ACTIVE** DU upper Channel Status has occurred
DU2LO_STS	26	rwhxr	**ADC1 Differential Unit 2 (DU2) lower Channel Status** Conversion of Channel has finished 0_B **INACTIVE** No DU lower Channel Status has occurred 1_B **ACTIVE** DU lower Channel Status has occurred

Field	Bits	Type	Description
DU1UP_STS	25	rwhxr	**ADC1 Differential Unit 1 (DU1) upper Channel Status** Conversion of Channel has finished 0_B **INACTIVE** No DU upper Channel Status has occurred 1_B **ACTIVE** DU upper Channel Status has occurred
DU1LO_STS	24	rwhxr	**ADC1 Differential Unit 1 (DU1) lower Channel Status** Conversion of Channel has finished 0_B **INACTIVE** No DU lower Channel Status has occurred 1_B **ACTIVE** DU lower Channel Status has occurred
RES	23:0	r	**Reserved** Always read as 0

Table 486 RESET of ADC1_STS_1

Register Reset Type	Reset Values	Reset Short Name	Reset Mode	Note
RESET_TYPE_3	0000 0000_H	RESET_TYPE_3		

Measurement Unit 1 Status 2 Register

ADC1_STS_2	Offset	Reset Value
ADC1 Status 2 Register	104_H	see Table 484

31	30	29	28	27	26	25	24	23	22	21	20	19	18	17	16
RES				P2_7_UP*	P2_6_UP*	P2_3_UP*	P2_2_UP*	P2_1_UP*	MON5_UP*	MON4_UP*	MON3_UP*	MON2_UP*	MON1_UP*	VS_UP_S*	RES
r				rc	rc	rc	rc	rc	rc	rc	rc	rc	rc	rc	r

15	14	13	12	11	10	9	8	7	6	5	4	3	2	1	0
RES				P2_7_LO*	P2_6_LO*	P2_3_LO*	P2_2_LO*	P2_1_LO*	MON5_LO*	MON4_LO*	MON3_LO*	MON2_LO*	MON1_LO*	VS_LO_S*	RES
r				rc	rc	rc	rc	rc	rc	rc	rc	rc	rc	rc	r

Field	Bits	Type	Description
RES	31:28	r	**Reserved** Always read as 0
P2_7_UP_STS	27	rc	**ADC1 Port 2.7 Upper Threshold Status** 0_B **Below limit** Status below upper threshold 1_B **Above limit** Upper threshold exceeded
P2_6_UP_STS	26	rc	**ADC1 Port 2.6 Upper Threshold Status** 0_B **Below limit** Status below upper threshold 1_B **Above limit** Upper threshold exceeded
P2_3_UP_STS	25	rc	**ADC1 Port 2.3 Upper Threshold Status** 0_B **Below limit** Status below upper threshold 1_B **Above limit** Upper threshold exceeded
P2_2_UP_STS	24	rc	**ADC1 Port 2.2 Upper Threshold Status** 0_B **Below limit** Status below upper threshold 1_B **Above limit** Upper threshold exceeded
P2_1_UP_STS	23	rc	**ADC1 Port 2.1 Upper Threshold Status** 0_B **Below limit** Status below upper threshold 1_B **Above limit** Upper threshold exceeded
MON5_UP_STS	22	rc	**ADC1 MON 5 Upper Threshold Status** 0_B **Below limit** Status below upper threshold 1_B **Above limit** Upper threshold exceeded
MON4_UP_STS	21	rc	**ADC1 MON 4 Upper Threshold Status** 0_B **Below limit** Status below upper threshold 1_B **Above limit** Upper threshold exceeded
MON3_UP_STS	20	rc	**ADC1 MON 3 Upper Threshold Status** 0_B **Below limit** Status below upper threshold 1_B **Above limit** Upper threshold exceeded
MON2_UP_STS	19	rc	**ADC1 MON 2 Upper Threshold Status** 0_B **Below limit** Status below upper threshold 1_B **Above limit** Upper threshold exceeded

Field	Bits	Type	Description
MON1_UP_STS	18	rc	**ADC1 MON 1 Upper Threshold Status** 0_B **Below limit** Status below upper threshold 1_B **Above limit** Upper threshold exceeded
VS_UP_STS	17	rc	**ADC1 VS Upper Threshold Status** 0_B **Below limit** Status below upper threshold 1_B **Above limit** Upper threshold exceeded
RES	16:12	r	**Reserved** Always read as 0
P2_7_LO_STS	11	rc	**ADC1 Port 2.7 Lower Threshold Status** 0_B **Below limit** Status below upper threshold 1_B **Above limit** Upper threshold exceeded
P2_6_LO_STS	10	rc	**ADC1 Port 2.6 Lower Threshold Status** 0_B **Below limit** Status below upper threshold 1_B **Above limit** Upper threshold exceeded
P2_3_LO_STS	9	rc	**ADC1 Port 2.3 Lower Threshold Status** 0_B **Below limit** Status below upper threshold 1_B **Above limit** Upper threshold exceeded
P2_2_LO_STS	8	rc	**ADC1 Port 2.2 Lower Threshold Status** 0_B **Below limit** Status below upper threshold 1_B **Above limit** Upper threshold exceeded
P2_1_LO_STS	7	rc	**ADC1 Port 2.1 Lower Threshold Status** 0_B **Below limit** Status below upper threshold 1_B **Above limit** Upper threshold exceeded
MON5_LO_STS	6	rc	**ADC1 MON 5 Lower Threshold Status** 0_B **Below limit** Status below upper threshold 1_B **Above limit** Upper threshold exceeded
MON4_LO_STS	5	rc	**ADC1 MON 4 Lower Threshold Status** 0_B **Below limit** Status below upper threshold 1_B **Above limit** Upper threshold exceeded
MON3_LO_STS	4	rc	**ADC1 MON 3 Lower Threshold Status** 0_B **Below limit** Status below upper threshold 1_B **Above limit** Upper threshold exceeded
MON2_LO_STS	3	rc	**ADC1 MON 2 Lower Threshold Status** 0_B **Below limit** Status below upper threshold 1_B **Above limit** Upper threshold exceeded
MON1_LO_STS	2	rc	**ADC1 MON 1 Lower Threshold Status** 0_B **Below limit** Status below upper threshold 1_B **Above limit** Upper threshold exceeded
VS_LO_STS	1	rc	**ADC1 VS Lower Threshold Status** 0_B **Below limit** Status below upper threshold 1_B **Above limit** Upper threshold exceeded
RES	0	r	**Reserved** Always read as 0

Table 487 RESET of ADC1_IRQS_1

Register Reset Type	Reset Values	Reset Short Name	Reset Mode	Note
RESET_TYPE_3	$0000\ 0000_H$	RESET_TYPE_3		

Measurement Unit 1 Status Clear 1 Register

ADC1_STSCLR_1	Offset	Reset Value
ADC1 Status Clear 1 Register	128_H	see Table 488

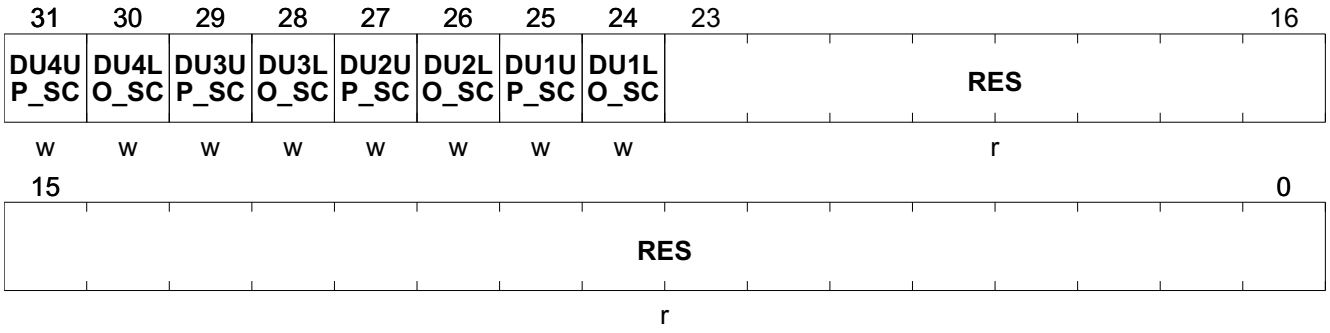

Field	Bits	Type	Description
DU4UP_SC	31	w	**ADC1 Differential Unit 4 (DU4) upper Channel Status Clear** Conversion of Channel has finished 0_B **INACTIVE** No DU upper Channel Status has occurred 1_B **ACTIVE** DU upper Channel Status has occurred
DU4LO_SC	30	w	**ADC1 Differential Unit 4 (DU4) lower Channel Status Clear** Conversion of Channel has finished 0_B **INACTIVE** No DU lower Channel Status has occurred 1_B **ACTIVE** DU lower Channel Status has occurred
DU3UP_SC	29	w	**ADC1 Differential Unit 3 (DU3) upper Channel Status Clear** Conversion of Channel has finished 0_B **INACTIVE** No DU upper Channel Status has occurred 1_B **ACTIVE** DU upper Channel Status has occurred
DU3LO_SC	28	w	**ADC1 Differential Unit 3 (DU3) lower Channel Status Clear** Conversion of Channel has finished 0_B **INACTIVE** No DU lower Channel Status has occurred 1_B **ACTIVE** DU lower Channel Status has occurred
DU2UP_SC	27	w	**ADC1 Differential Unit 2 (DU2) upper Channel Status Clear** Conversion of Channel has finished 0_B **INACTIVE** No DU upper Channel Status has occurred 1_B **ACTIVE** DU upper Channel Status has occurred

Field	Bits	Type	Description
DU2LO_SC	26	w	**ADC1 Differential Unit 2 (DU2) lower Channel Status Clear** Conversion of Channel has finished 0_B **INACTIVE** No DU lower Channel Status has occurred 1_B **ACTIVE** DU lower Channel Status has occurred
DU1UP_SC	25	w	**ADC1 Differential Unit 1 (DU1) upper Channel Status Clear** Conversion of Channel has finished 0_B **INACTIVE** No DU upper Channel Status has occurred 1_B **ACTIVE** DU upper Channel Status has occurred
DU1LO_SC	24	w	**ADC1 Differential Unit 1 (DU1) lower Channel Status Clear** Conversion of Channel has finished 0_B **INACTIVE** No DU lower Channel Status has occurred 1_B **ACTIVE** DU lower Channel Status has occurred
RES	23:0	r	**Reserved** Always read as 0

Table 488 RESET of ADC1_STSCLR_1

Register Reset Type	Reset Values	Reset Short Name	Reset Mode	Note
RESET_TYPE_3	0000 0000_H	RESET_TYPE_3		

Measurement Unit 1 Interrupt Status Clear 1 Register

ADC1_IRQCLR_1	Offset	Reset Value
ADC1 Interrupt Status Clear 1 Register	$6C_H$	see Table 489

31	30	29	28	27	26	25	24	23	18	17	16
DU4UP_I*	DU4LO_I*	DU3UP_I*	DU3LO_I*	DU2UP_I*	DU2LO_I*	DU1UP_I*	DU1LO_I*	RES		ESM_ISC	EIM_ISC
w	w	w	w	w	w	w	w	r		w	w

15	13	12	11	10	9	8	7	6	5	4	3	2	1	0
RES		P2_0_ISC	P2_7_ISC	P2_6_ISC	P2_3_ISC	P2_2_ISC	P2_1_ISC	MON5_ISC	MON4_ISC	MON3_ISC	MON2_ISC	MON1_ISC	VS_ISC	VBATSEN*
r		w	w	w	w	w	w	w	w	w	w	w	w	w

Field	Bits	Type	Description
DU4UP_ISC	31	w	**Differential Unit 4 lower Interrupt Status Clear** 0_B **INACTIVE** interrupt status is not cleared 1_B **ACTIVE** interrupt status is cleared
DU4LO_ISC	30	w	**Differential Unit 4 lower Interrupt Status Clear** 0_B **INACTIVE** interrupt status is not cleared 1_B **ACTIVE** interrupt status is cleared
DU3UP_ISC	29	w	**Differential Unit 3 lower Interrupt Status Clear** 0_B **INACTIVE** interrupt status is not cleared 1_B **ACTIVE** interrupt status is cleared
DU3LO_ISC	28	w	**Differential Unit 3 lower Interrupt Status Clear** 0_B **INACTIVE** interrupt status is not cleared 1_B **ACTIVE** interrupt status is cleared
DU2UP_ISC	27	w	**Differential Unit 2 lower Interrupt Status Clear** 0_B **INACTIVE** interrupt status is not cleared 1_B **ACTIVE** interrupt status is cleared
DU2LO_ISC	26	w	**Differential Unit 2 lower Interrupt Status Clear** 0_B **INACTIVE** interrupt status is not cleared 1_B **ACTIVE** interrupt status is cleared
DU1UP_ISC	25	w	**Differential Unit 1 lower Interrupt Status Clear** 0_B **INACTIVE** interrupt status is not cleared 1_B **ACTIVE** interrupt status is cleared
DU1LO_ISC	24	w	**Differential Unit 1 lower Interrupt Status Clear** 0_B **INACTIVE** interrupt status is not cleared 1_B **ACTIVE** interrupt status is cleared
RES	23:18	r	**Reserved** Always read as 0
ESM_ISC	17	w	**Exceptional Sequence Measurement (ESM) Status Clear** 0_B **INACTIVE** No ESM has cleared 1_B **ACTIVE** ESM cleared

Field	Bits	Type	Description
EIM_ISC	16	w	**Exceptional Interrupt Measurement (EIM) Status Clear** 0_B **INACTIVE** No EIM cleared 1_B **ACTIVE** EIM cleared
RES	15:13	r	**Reserved** Always read as 0
P2_0_ISC	12	w	**ADC1 Port 2.0 Interrupt Status Clear** Interrupt status is cleared 0_B **INACTIVE** interrupt status is not cleared 1_B **ACTIVE** interrupt status is cleared
P2_7_ISC	11	w	**ADC1 Port 2.7 Interrupt Status Clear** Interrupt status is cleared 0_B **INACTIVE** interrupt status is not cleared 1_B **ACTIVE** interrupt status is cleared
P2_6_ISC	10	w	**ADC1 Port 2.6 Interrupt Status Clear** Interrupt status is cleared 0_B **INACTIVE** interrupt status is not cleared 1_B **ACTIVE** interrupt status is cleared
P2_3_ISC	9	w	**ADC1 Port 2.3 Interrupt Status Clear** Interrupt status is cleared 0_B **INACTIVE** interrupt status is not cleared 1_B **ACTIVE** interrupt status is cleared
P2_2_ISC	8	w	**ADC1 Port 2.2 Interrupt Status Clear** Interrupt status is cleared 0_B **INACTIVE** interrupt status is not cleared 1_B **ACTIVE** interrupt status is cleared
P2_1_ISC	7	w	**ADC1 Port 2.1 Interrupt Status Clear** Interrupt status is cleared 0_B **INACTIVE** interrupt status is not cleared 1_B **ACTIVE** interrupt status is cleared
MON5_ISC	6	w	**ADC1 MON 5 Interrupt Status Clear** Interrupt status is cleared 0_B **INACTIVE** interrupt status is not cleared 1_B **ACTIVE** interrupt status is cleared
MON4_ISC	5	w	**ADC1 MON 4 Interrupt Status Clear** Interrupt status is cleared 0_B **INACTIVE** interrupt status is not cleared 1_B **ACTIVE** interrupt status is cleared
MON3_ISC	4	w	**ADC1 MON 3 Interrupt Status Clear** Interrupt status is cleared 0_B **INACTIVE** interrupt status is not cleared 1_B **ACTIVE** interrupt status is cleared
MON2_ISC	3	w	**ADC1 MON 2 Interrupt Status Clear** Interrupt status is cleared 0_B **INACTIVE** interrupt status is not cleared 1_B **ACTIVE** interrupt status is cleared

Field	Bits	Type	Description
MON1_ISC	2	w	**ADC1 MON 1 Interrupt Status Clear** Interrupt status is cleared 0_B **INACTIVE** interrupt status is not cleared 1_B **ACTIVE** interrupt status is cleared
VS_ISC	1	w	**ADC1 VS Interrupt Status Clear** Interrupt status is cleared 0_B **INACTIVE** interrupt status is not cleared 1_B **ACTIVE** interrupt status is cleared
VBATSEN_ISC	0	w	**ADC1 VBAT_SENSE Interrupt Status Clear** Interrupt status is cleared 0_B **INACTIVE** interrupt status is not cleared 1_B **ACTIVE** interrupt status is cleared

Table 489 RESET of ADC1_IRQCLR_1

Register Reset Type	Reset Values	Reset Short Name	Reset Mode	Note
RESET_TYPE_3	0000 0000_H	RESET_TYPE_3		

Measurement Unit 1 Interrupt Status Clear 2 Register

ADC1_IRQCLR_2	Offset	Reset Value
ADC1 Interrupt Status Clear 2 Register	108_H	see Table 490

31	28	27	26	25	24	23	22	21	20	19	18	17	16
RES		P2_7_UP*	P2_6_UP*	P2_3_UP*	P2_2_UP*	P2_1_UP*	MON5_UP*	MON4_UP*	MON3_UP*	MON2_UP*	MON1_UP*	VS_UP_I*	RES
r		w	w	w	w	w	w	w	w	w	w	w	r

15	12	11	10	9	8	7	6	5	4	3	2	1	0
RES		P2_7_LO*	P2_6_LO*	P2_3_LO*	P2_2_LO*	P2_1_LO*	MON5_LO*	MON4_LO*	MON3_LO*	MON2_LO*	MON1_LO*	VS_LO_I*	RES
r		w	w	w	w	w	w	w	w	w	w	w	r

Field	Bits	Type	Description
RES	31:28	r	**Reserved** Always read as 0
P2_7_UP_ISC	27	w	**ADC1 Port 2.7 Upper Threshold Interrupt Status Clear** Interrupt status is cleared 0_B **INACTIVE** interrupt status is not cleared 1_B **ACTIVE** interrupt status is cleared
P2_6_UP_ISC	26	w	**ADC1 Port 2.6 Upper Threshold Interrupt Status Clear** Interrupt status is cleared 0_B **INACTIVE** interrupt status is not cleared 1_B **ACTIVE** interrupt status is cleared
P2_3_UP_ISC	25	w	**ADC1 Port 2.3 Upper Threshold Interrupt Status Clear** Interrupt status is cleared 0_B **INACTIVE** interrupt status is not cleared 1_B **ACTIVE** interrupt status is cleared
P2_2_UP_ISC	24	w	**ADC1 Port 2.2 Upper Threshold Interrupt Status Clear** Interrupt status is cleared 0_B **INACTIVE** interrupt status is not cleared 1_B **ACTIVE** interrupt status is cleared
P2_1_UP_ISC	23	w	**ADC1 Port 2.1 Upper Threshold Interrupt Status Clear** Interrupt status is cleared 0_B **INACTIVE** interrupt status is not cleared 1_B **ACTIVE** interrupt status is cleared
MON5_UP_ISC	22	w	**ADC1 MON 5 Upper Threshold Interrupt Status Clear** Interrupt status is cleared 0_B **INACTIVE** interrupt status is not cleared 1_B **ACTIVE** interrupt status is cleared
MON4_UP_ISC	21	w	**ADC1 MON 4 Upper Threshold Interrupt Status Clear** Interrupt status is cleared 0_B **INACTIVE** interrupt status is not cleared 1_B **ACTIVE** interrupt status is cleared

Field	Bits	Type	Description
MON3_UP_ISC	20	w	**ADC1 MON 3 Upper Threshold Interrupt Status Clear** Interrupt status is cleared 0_B **INACTIVE** interrupt status is not cleared 1_B **ACTIVE** interrupt status is cleared
MON2_UP_ISC	19	w	**ADC1 MON 2 Upper Threshold Interrupt Status Clear** Interrupt status is cleared 0_B **INACTIVE** interrupt status is not cleared 1_B **ACTIVE** interrupt status is cleared
MON1_UP_ISC	18	w	**ADC1 MON 1 Upper Threshold Interrupt Status Clear** Interrupt status is cleared 0_B **INACTIVE** interrupt status is not cleared 1_B **ACTIVE** interrupt status is cleared
VS_UP_ISC	17	w	**ADC1 VS Upper Threshold Interrupt Status Clear** Interrupt status is cleared 0_B **INACTIVE** interrupt status is not cleared 1_B **ACTIVE** interrupt status is cleared
RES	16:12	r	**Reserved** Always read as 0
P2_7_LO_ISC	11	w	**ADC1 Port 2.7 Lower Threshold Interrupt Status Clear** Interrupt status is cleared 0_B **INACTIVE** interrupt status is not cleared 1_B **ACTIVE** interrupt status is cleared
P2_6_LO_ISC	10	w	**ADC1 Port 2.6 Lower Threshold Interrupt Status Clear** Interrupt status is cleared 0_B **INACTIVE** interrupt status is not cleared 1_B **ACTIVE** interrupt status is cleared
P2_3_LO_ISC	9	w	**ADC1 Port 2.3 Lower Threshold Interrupt Status Clear** Interrupt status is cleared 0_B **INACTIVE** interrupt status is not cleared 1_B **ACTIVE** interrupt status is cleared
P2_2_LO_ISC	8	w	**ADC1 Port 2.2 Lower Threshold Interrupt Status Clear** Interrupt status is cleared 0_B **INACTIVE** interrupt status is not cleared 1_B **ACTIVE** interrupt status is cleared
P2_1_LO_ISC	7	w	**ADC1 Port 2.1 Lower Threshold Interrupt Status Clear** Interrupt status is cleared 0_B **INACTIVE** interrupt status is not cleared 1_B **ACTIVE** interrupt status is cleared
MON5_LO_ISC	6	w	**ADC1 MON 5 Lower Threshold Interrupt Status Clear** Interrupt status is cleared 0_B **INACTIVE** interrupt status is not cleared 1_B **ACTIVE** interrupt status is cleared
MON4_LO_ISC	5	w	**ADC1 MON 4 Lower Threshold Interrupt Status Clear** Interrupt status is cleared 0_B **INACTIVE** interrupt status is not cleared 1_B **ACTIVE** interrupt status is cleared

Field	Bits	Type	Description
MON3_LO_ISC	4	w	**ADC1 MON 3 Lower Threshold Interrupt Status Clear** Interrupt status is cleared 0_B **INACTIVE** interrupt status is not cleared 1_B **ACTIVE** interrupt status is cleared
MON2_LO_ISC	3	w	**ADC1 MON 2 Lower Threshold Interrupt Status Clear** Interrupt status is cleared 0_B **INACTIVE** interrupt status is not cleared 1_B **ACTIVE** interrupt status is cleared
MON1_LO_ISC	2	w	**ADC1 MON 1 Lower Threshold Interrupt Status Clear** Interrupt status is cleared 0_B **INACTIVE** interrupt status is not cleared 1_B **ACTIVE** interrupt status is cleared
VS_LO_ISC	1	w	**ADC1 VS Lower Threshold Interrupt Status Clear** Interrupt status is cleared 0_B **INACTIVE** interrupt status is not cleared 1_B **ACTIVE** interrupt status is cleared
RES	0	r	**Reserved** Always read as 0

Table 490 RESET of ADC1_IRQCLR_2

Register Reset Type	Reset Values	Reset Short Name	Reset Mode	Note
RESET_TYPE_3	$0000\ 0000_H$	RESET_TYPE_3		

ADC1 Interrupt Enable 1 Register

ADC1_IRQEN_1	Offset	Reset Value
ADC1 Interrupt Enable 1 Register	68_H	see Table 491

31	30	29	28	27	26	25	24	23	18	17	16
DU4UP_I*	DU4LO_I*	DU3UP_I*	DU3LO_I*	DU2UP_I*	DU2LO_I*	DU1UP_I*	DU1LO_I*	RES		ESM_IEN	EIM_IEN
rw	rw	rw	rw	rw	rw	rw	rw	r		rw	rw

15	13	12	11	10	9	8	7	6	5	4	3	2	1	0
RES		P2_0_IEN	P2_7_IEN	P2_6_IEN	P2_3_IEN	P2_2_IEN	P2_1_IEN	MON5_IEN	MON4_IEN	MON3_IEN	MON2_IEN	MON1_IEN	VS_IEN	VBATSEN*
r		rw	rw	rw	rw	rw	rw	rw	rw	rw	rw	rw	rw	rw

Field	Bits	Type	Description
DU4UP_IEN	31	rw	**Differential Unit 4 upper Interrupt Enable** 0_B **DISABLED** Interrupt disabled 1_B **ENABLED** Interrupt enabled
DU4LO_IEN	30	rw	**Differential Unit 4 lower Interrupt Enable** 0_B **DISABLED** Interrupt disabled 1_B **ENABLED** Interrupt enabled
DU3UP_IEN	29	rw	**Differential Unit 3 upper Interrupt Enable** 0_B **DISABLED** Interrupt disabled 1_B **ENABLED** Interrupt enabled
DU3LO_IEN	28	rw	**Differential Unit 3 lower Interrupt Enable** 0_B **DISABLED** Interrupt disabled 1_B **ENABLED** Interrupt enabled
DU2UP_IEN	27	rw	**Differential Unit 2 upper Interrupt Enable** 0_B **DISABLED** Interrupt disabled 1_B **ENABLED** Interrupt enabled
DU2LO_IEN	26	rw	**Differential Unit 2 lower Interrupt Enable** 0_B **DISABLED** Interrupt disabled 1_B **ENABLED** Interrupt enabled
DU1UP_IEN	25	rw	**Differential Unit 1 upper Interrupt Enable** 0_B **DISABLED** Interrupt disabled 1_B **ENABLED** Interrupt enabled
DU1LO_IEN	24	rw	**Differential Unit 1 lower Interrupt Enable** 0_B **DISABLED** Interrupt disabled 1_B **ENABLED** Interrupt enabled
RES	23:18	r	**Reserved** Always read as 0
ESM_IEN	17	rw	**Exceptional Sequence Measurement (ESM) Interrupt Enable** 0_B **DISABLED** Interrupt disabled 1_B **ENABLED** Interrupt enabled

Field	Bits	Type	Description
EIM_IEN	16	rw	**Exceptional Interrupt Measurement (EIM) Interrupt Enable** 0_B **DISABLED** Interrupt disabled 1_B **ENABLED** Interrupt enabled
RES	15:13	r	**Reserved** Always read as 0
P2_0_IEN	12	rw	**ADC1 Port 2.0 Interrupt Enable** 0_B **DISABLED** Interrupt disabled 1_B **ENABLED** Interrupt enabled
P2_7_IEN	11	rw	**ADC1 Port 2.7 Interrupt Enable** 0_B **DISABLED** Interrupt disabled 1_B **ENABLED** Interrupt enabled
P2_6_IEN	10	rw	**ADC1 Port 2.6 Interrupt Enable** 0_B **DISABLED** Interrupt disabled 1_B **ENABLED** Interrupt enabled
P2_3_IEN	9	rw	**ADC1 Port 2.3 Interrupt Enable** 0_B **DISABLED** Interrupt disabled 1_B **ENABLED** Interrupt enabled
P2_2_IEN	8	rw	**ADC1 Port 2.2 Interrupt Enable** 0_B **DISABLED** Interrupt disabled 1_B **ENABLED** Interrupt enabled
P2_1_IEN	7	rw	**ADC1 Port 2.1 Interrupt Enable** 0_B **DISABLED** Interrupt disabled 1_B **ENABLED** Interrupt enabled
MON5_IEN	6	rw	**ADC1 MON 5 Interrupt Enable** 0_B **DISABLED** Interrupt disabled 1_B **ENABLED** Interrupt enabled
MON4_IEN	5	rw	**ADC1 MON 4 Interrupt Enable** 0_B **DISABLED** Interrupt disabled 1_B **ENABLED** Interrupt enabled
MON3_IEN	4	rw	**ADC1 MON 3 Interrupt Enable** 0_B **DISABLED** Interrupt disabled 1_B **ENABLED** Interrupt enabled
MON2_IEN	3	rw	**ADC1 MON 2 Interrupt Enable** 0_B **DISABLED** Interrupt disabled 1_B **ENABLED** Interrupt enabled
MON1_IEN	2	rw	**ADC1 MON 1 Interrupt Enable** 0_B **DISABLED** Interrupt disabled 1_B **ENABLED** Interrupt enabled
VS_IEN	1	rw	**ADC1 VS Interrupt Enable** 0_B **DISABLED** Interrupt disabled 1_B **ENABLED** Interrupt enabled
VBATSEN_IEN	0	rw	**ADC1 VBAT_SENSE Interrupt Enable** 0_B **DISABLED** Interrupt disabled 1_B **ENABLED** Interrupt enabled

Table 491 RESET of ADC1_IRQEN_1

Register Reset Type	Reset Values	Reset Short Name	Reset Mode	Note
RESET_TYPE_3	$0000\ 0000_H$	RESET_TYPE_3		

ADC1 Interrupt Enable 2 Register

ADC1_IRQEN_2	Offset	Reset Value
ADC1 Interrupt Enable 2 Register	$10C_H$	see Table 491

31	30	29	28	27	26	25	24	23	22	21	20	19	18	17	16
RES				P2_7_UP*	P2_6_UP*	P2_3_UP*	P2_2_UP*	P2_1_UP*	MON5_UP*	MON4_UP*	MON3_UP*	MON2_UP*	MON1_UP*	VS_UP_I*	RES
r				rw	rw	rw	rw	rw	rw	rw	rw	rw	rw	rw	r

15	14	13	12	11	10	9	8	7	6	5	4	3	2	1	0
RES				P2_7_LO*	P2_6_LO*	P2_3_LO*	P2_2_LO*	P2_1_LO*	MON5_LO*	MON4_LO*	MON3_LO*	MON2_LO*	MON1_LO*	VS_LO_I*	RES
r				rw	rw	rw	rw	rw	rw	rw	rw	rw	rw	rw	r

Field	Bits	Type	Description
RES	31:28	r	**Reserved** Always read as 0
P2_7_UP_IEN	27	rw	**ADC1 Port 2.7 Upper Threshold Interrupt Enable** 0_B **DISABLED** Interrupt disabled 1_B **ENABLED** Interrupt enabled
P2_6_UP_IEN	26	rw	**ADC1 Port 2.6 Upper Threshold Interrupt Enable** 0_B **DISABLED** Interrupt disabled 1_B **ENABLED** Interrupt enabled
P2_3_UP_IEN	25	rw	**ADC1 Port 2.3 Upper Threshold Interrupt Enable** 0_B **DISABLED** Interrupt disabled 1_B **ENABLED** Interrupt enabled
P2_2_UP_IEN	24	rw	**ADC1 Port 2.2 Upper Threshold Interrupt Enable** 0_B **DISABLED** Interrupt disabled 1_B **ENABLED** Interrupt enabled
P2_1_UP_IEN	23	rw	**ADC1 Port 2.1 Upper Threshold Interrupt Enable** 0_B **DISABLED** Interrupt disabled 1_B **ENABLED** Interrupt enabled
MON5_UP_IEN	22	rw	**ADC1 MON 5 Upper Threshold Interrupt Enable** 0_B **DISABLED** Interrupt disabled 1_B **ENABLED** Interrupt enabled
MON4_UP_IEN	21	rw	**ADC1 MON 4 Upper Threshold Interrupt Enable** 0_B **DISABLED** Interrupt disabled 1_B **ENABLED** Interrupt enabled
MON3_UP_IEN	20	rw	**ADC1 MON 3 Upper Threshold Interrupt Enable** 0_B **DISABLED** Interrupt disabled 1_B **ENABLED** Interrupt enabled
MON2_UP_IEN	19	rw	**ADC1 MON 2 Upper Threshold Interrupt Enable** 0_B **DISABLED** Interrupt disabled 1_B **ENABLED** Interrupt enabled

Field	Bits	Type	Description
MON1_UP_IEN	18	rw	**ADC1 MON 1 Upper Threshold Interrupt Enable** 0_B **DISABLED** Interrupt disabled 1_B **ENABLED** Interrupt enabled
VS_UP_IEN	17	rw	**ADC1 VS Upper Threshold Interrupt Enable** 0_B **DISABLED** Interrupt disabled 1_B **ENABLED** Interrupt enabled
RES	16:12	r	**Reserved** Always read as 0
P2_7_LO_IEN	11	rw	**ADC1 Port 2.7 Lower Threshold Interrupt Enable** 0_B **DISABLED** Interrupt disabled 1_B **ENABLED** Interrupt enabled
P2_6_LO_IEN	10	rw	**ADC1 Port 2.6 Lower Threshold Interrupt Enable** 0_B **DISABLED** Interrupt disabled 1_B **ENABLED** Interrupt enabled
P2_3_LO_IEN	9	rw	**ADC1 Port 2.3 Lower Threshold Interrupt Enable** 0_B **DISABLED** Interrupt disabled 1_B **ENABLED** Interrupt enabled
P2_2_LO_IEN	8	rw	**ADC1 Port 2.2 Lower Threshold Interrupt Enable** 0_B **DISABLED** Interrupt disabled 1_B **ENABLED** Interrupt enabled
P2_1_LO_IEN	7	rw	**ADC1 Port 2.1 Lower Threshold Interrupt Enable** 0_B **DISABLED** Interrupt disabled 1_B **ENABLED** Interrupt enabled
MON5_LO_IEN	6	rw	**ADC1 MON 5 Lower Threshold Interrupt Enable** 0_B **DISABLED** Interrupt disabled 1_B **ENABLED** Interrupt enabled
MON4_LO_IEN	5	rw	**ADC1 MON 4 Lower Threshold Interrupt Enable** 0_B **DISABLED** Interrupt disabled 1_B **ENABLED** Interrupt enabled
MON3_LO_IEN	4	rw	**ADC1 MON 3 Lower Threshold Interrupt Enable** 0_B **DISABLED** Interrupt disabled 1_B **ENABLED** Interrupt enabled
MON2_LO_IEN	3	rw	**ADC1 MON 2 Lower Threshold Interrupt Enable** 0_B **DISABLED** Interrupt disabled 1_B **ENABLED** Interrupt enabled
MON1_LO_IEN	2	rw	**ADC1 MON 1 Lower Threshold Interrupt Enable** 0_B **DISABLED** Interrupt disabled 1_B **ENABLED** Interrupt enabled
VS_LO_IEN	1	rw	**ADC1 VS Lower Threshold Interrupt Enable** 0_B **DISABLED** Interrupt disabled 1_B **ENABLED** Interrupt enabled
RES	0	r	**Reserved** Always read as 0

Table 492 RESET of ADC1_IRQEN_2

Register Reset Type	Reset Values	Reset Short Name	Reset Mode	Note
RESET_TYPE_3	$0000\ 0000_H$	RESET_TYPE_3		

24.10 Differential Measurement Unit (only TLE9845QX)

24.10.1 Motivation for Differential Measurement Unit

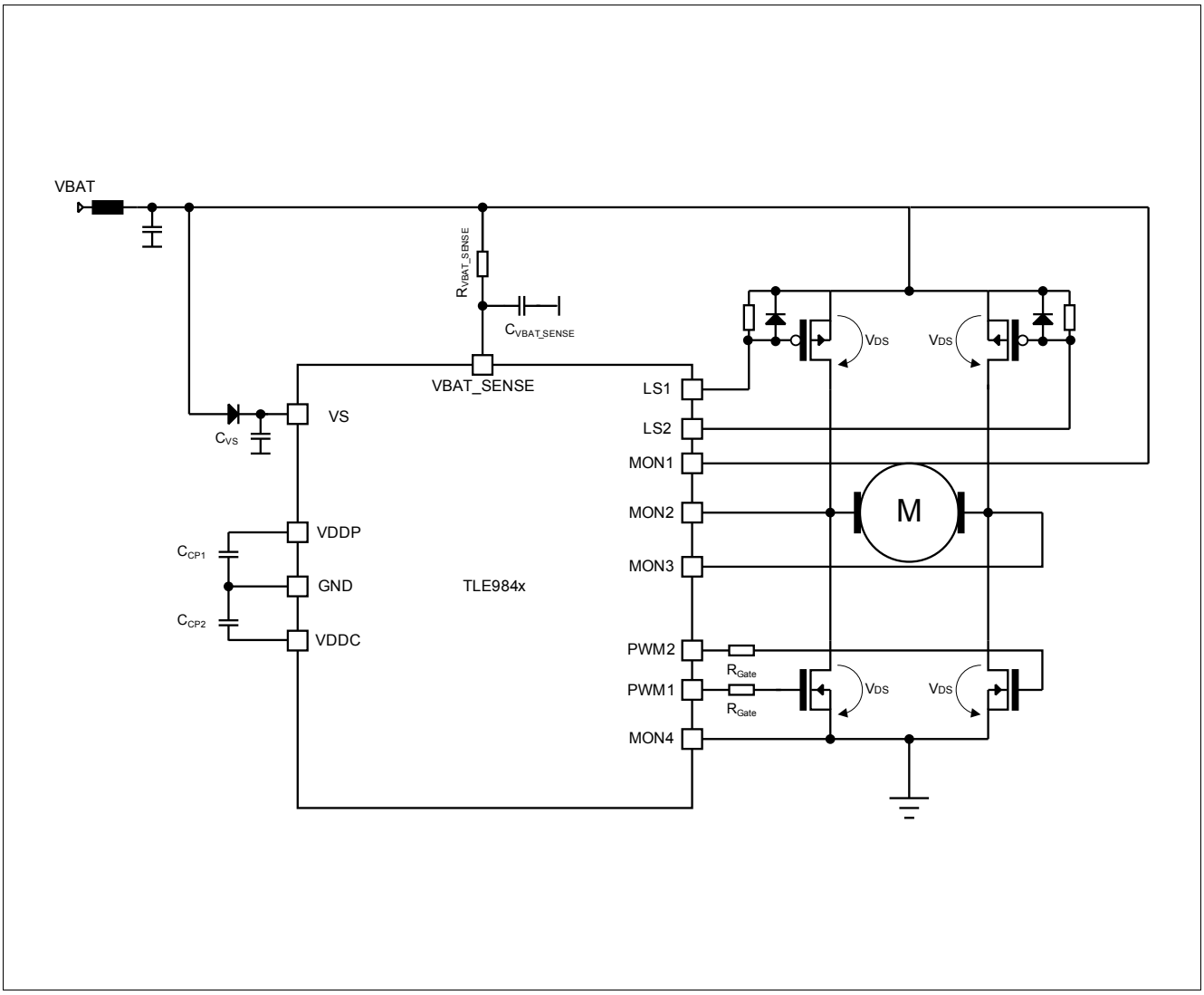

Figure 209

24.10.2 Implementation of Differential Measurement Unit

The differential measurement unit is a sub-unit of the digital postprocessing. It calculates the difference between selectable Monitoring Channels. The structure is shown in **Figure 210**.

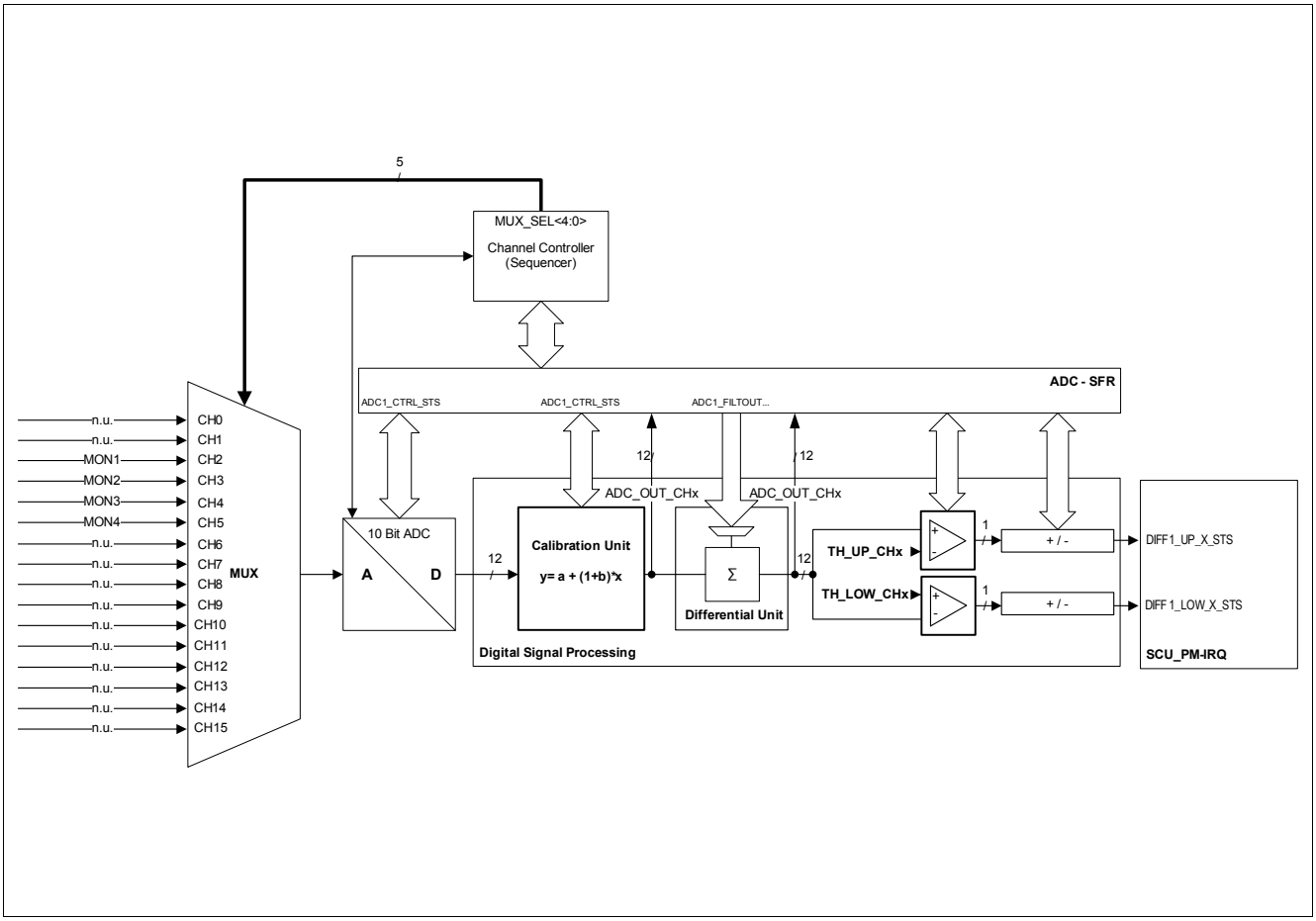

Figure 210 Structure of Differential Measurement Unit

The data processing unit also offers a differential evaluation of the Monitoring Channels. This offers the possibility to build up a V_{DS} Monitoring for H-Bridge control. The V_{DS} Monitoring is realized by the Sequencer. The user enables the 4 required MONs in the sequencer and the sequencer triggers the ADC to perform the measurements. In a failure case, CTRAP_3 is configurable to switch CCU6-Channels to passive state without CPU Load or Interrupt Handling of Differential Unit (TLE9845QX only!)

Due to the fact that this measurements need to be aligned to a certain PWM control scenario there is necessary to blank the measurments which are falling in the switching phase of a PWM channel. For this purpose there is a special enable procedure for the DU unit whose timing is sketched in **Figure 211**.

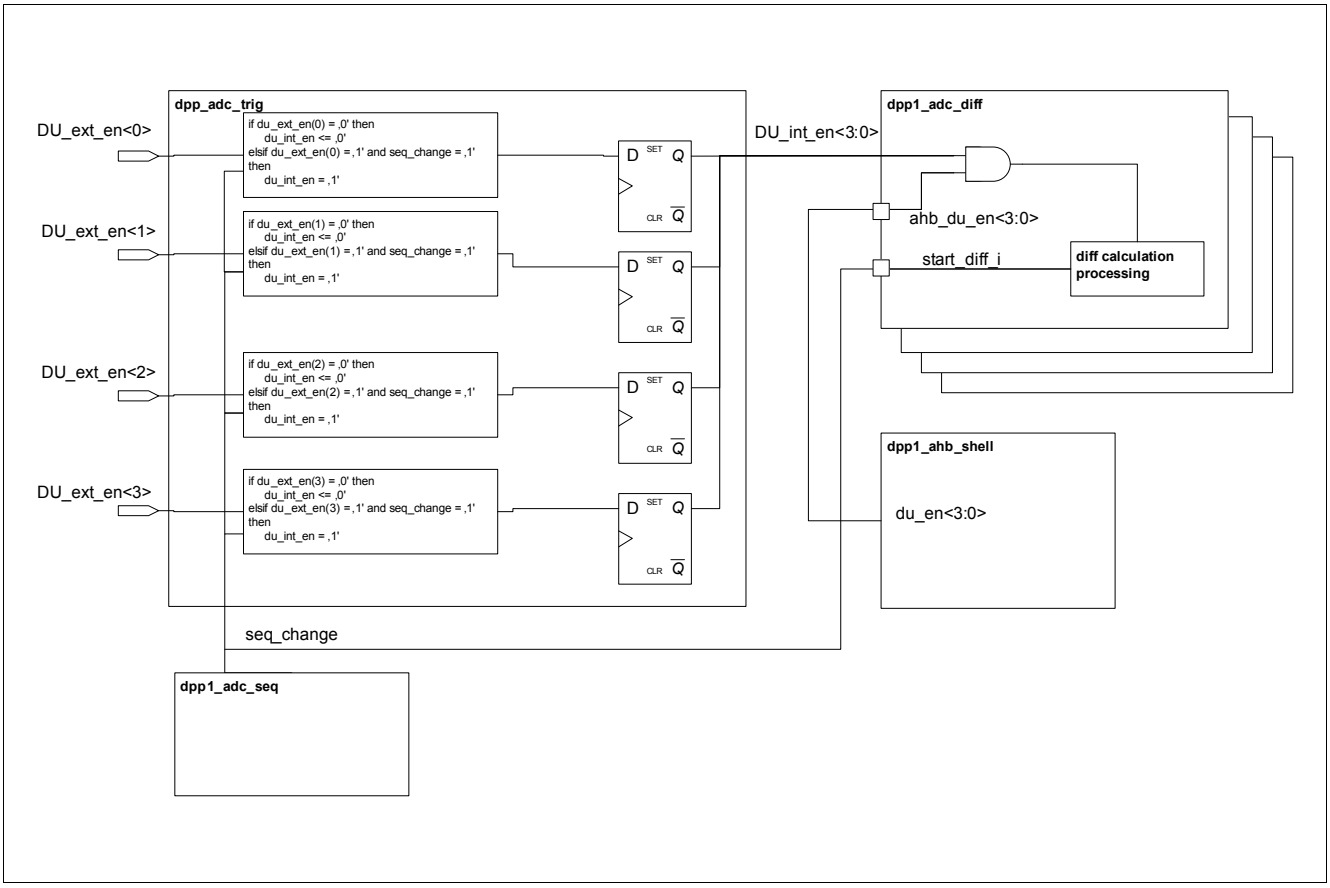

Figure 211 Generation of enable signals for the DU Unit

The enable inputs are generated in the SCU_DM module. They logic sketched in **Figure 211** is blanking the DU Unit inputs from incoming ADC results of used MON channels for the emulated V_{DS} Monitoring. The timing of a typical ccu6 patttern can be seen in **Figure 212**. The green ‘pulses’ show the valid sequences which are calculated by the DU unit.

The DU_int_en<x> signals are configured in register **SCU_MODPISEL4**. All DU_int_en<x> signals are AND-gated with COUT63.

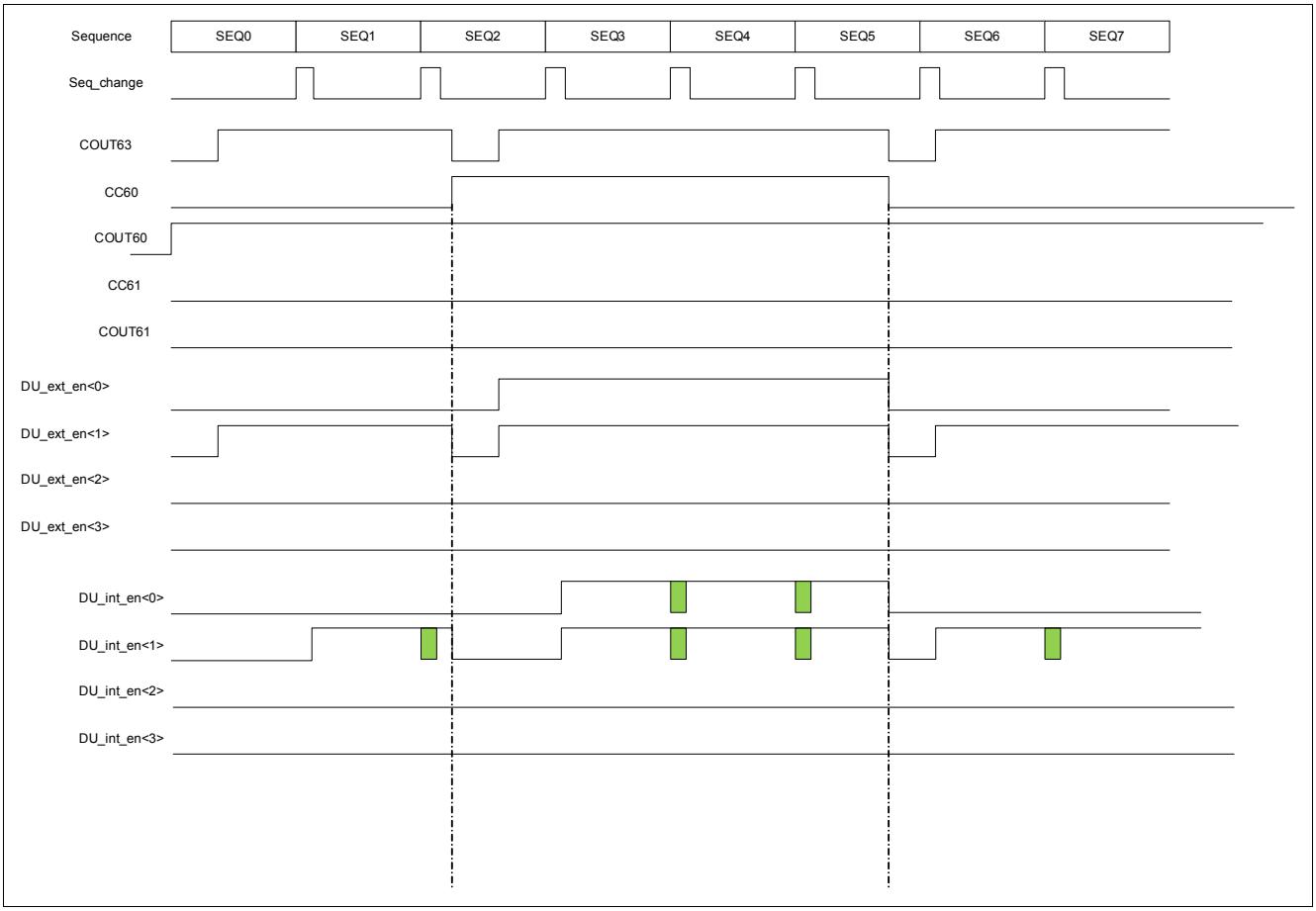

Figure 212 Timing of enable signals for the DU Unit

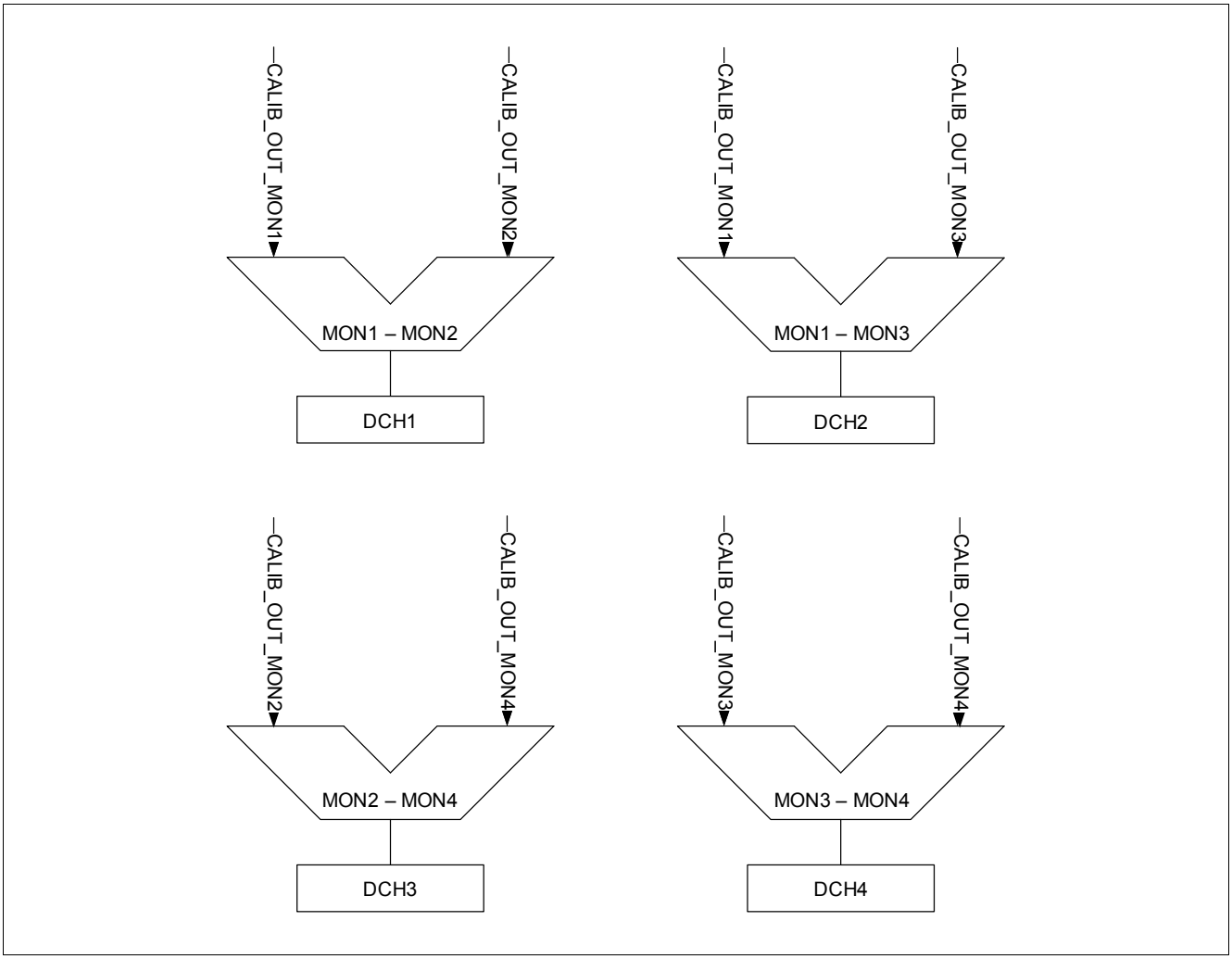

Figure 213 Structure of Differential Measurement Unit

24.10.3 ADC1 Differential Unit Input Selection Register

Table 493 Register Overview

Register Short Name	Register Long Name	Offset Address	Reset Value
ADC1 Differential Unit Input Selection Register,			
ADC1_DUIN_SEL	Measurement Unit 1 - Differential Unit Input Selection Register	FC_H	$0000\ 0000_H$

The registers are addressed wordwise.

Measurement Unit 1 - Differential Unit Input Selection Register

ADC1_DUIN_SEL	Offset	Reset Value
Measurement Unit 1 - Differential Unit Input Selection Register	FC_H	see Table 494

31	30	29	28	27	26	25	24	23	22	21	20	19	18	17	16
RES			DU4RES_*	RES			DU4_EN	RES			DU3RES_*	RES			DU3_EN
r			rc	r			rw	r			rc	r			rw

15	14	13	12	11	10	9	8	7	6	5	4	3	2	1	0
RES			DU2RES_*	RES			DU2_EN	RES			DU1RES_*	RES			DU1_EN
r			rc	r			rw	r			rc	r			rw

Field	Bits	Type	Description
RES	31:29	r	**Reserved** Always read as 0
DU4RES_NEG	28	rc	**Differential Unit 4 result negative** 0_B **DU4 Result positive** Differential Unit 4 result positive after calculation 1_B **DU4 Result negative** Differential Unit 4 result negative after calculation
RES	27:25	r	**Reserved** Always read as 0
DU4_EN	24	rw	**Differential Unit 4 enable** 0_B **DU4 disable** Differential Unit 4 is disabled 1_B **DU4 enable** Differential Unit 4 is enabled
RES	23:21	r	**Reserved** Always read as 0
DU3RES_NEG	20	rc	**Differential Unit 3 result negative** 0_B **DU3 Result positive** Differential Unit 3 result positive after calculation 1_B **DU3 Result negative** Differential Unit 3 result negative after calculation
RES	19:17	r	**Reserved** Always read as 0
DU3_EN	16	rw	**Differential Unit 3 enable** 0_B **DU3 disable** Differential Unit 3 is disabled 1_B **DU3 enable** Differential Unit 3 is enabled

Field	Bits	Type	Description
RES	15:13	r	**Reserved** Always read as 0
DU2RES_NEG	12	rc	**Differential Unit 2 result negative** 0_B **DU2 Result positive** Differential Unit 2 result positive after calculation 1_B **DU2 Result negative** Differential Unit 2 result negative after calculation
RES	11:9	r	**Reserved** Always read as 0
DU2_EN	8	rw	**Differential Unit 2 enable** 0_B **DU2 disable** Differential Unit 2 is disabled 1_B **DU2 enable** Differential Unit 2 is enabled
RES	7:5	r	**Reserved** Always read as 0
DU1RES_NEG	4	rc	**Differential Unit 1 result negative** *Note: if the calculated result is negative* 0_B **DU1 Result positive** Differential Unit 1 result positive after calculation 1_B **DU1 Result negative** Differential Unit 1 result negative after calculation
RES	3:1	r	**Reserved** Always read as 0
DU1_EN	0	rw	**Differential Unit 1 enable** 0_B **DU1 disable** Differential Unit 1 is disabled 1_B **DU1 enable** Differential Unit 1 is enabled

Table 494 RESET of ADC1_DUIN_SEL

Register Reset Type	Reset Values	Reset Short Name	Reset Mode	Note
RESET_TYPE_3	$0000\ 0000_H$	RESET_TYPE_3		

24.11 Start-up Behavior after Reset

After the end of a reset phase the measurement sources and the post-processing units need some time for settling. In order to avoid undesired triggering of interrupts until the measurement signal acquisition is in a steady state, the status signals are forced to zero during the start-up phase.

The end of the start-up phase is indicated by the ready signal MI_RDY, in bit ADC1_CTRL3.MCM_RDY.

Measurement Core start-up procedure: the startup time of the complete signal chain are 2200 EoC cycles. The IIR-filter coefficient is set to C=2^-1 (fastest response time).

During the startup phase, the DPP will use SQ=1111_1111_1111, regardless of the sequence registers configuration.

During the startup phase, the output registers ADC1_FILTOUT_CHx is normally updated with the converted values. It is recommended to clear all registers before the will be used for applikation purposes.

During startup phase (while MRDY_O = LOW), the IIR filter uses coefficient 0x0 (1/2 weight of current sample), regardless of registers configuration.

24.12 Postprocessing Default Values

The following table shows the assigned measurements of the particular channels and the reset default values which are configured by FW during power-up. Since all channels are configurable by the user, the reset values can be reconfigured by writting the corresponding registers.

Table 495 Channel allocation and postprocessing default settings (effective after reset)

Channel#	Name	Function	MMODE[1]	FILTCOEFF[2]		Threshold digital[3]	Threshold analog	Hysteresis[4]	Counters[5]
Ch. 0	VBAT_SENSE	VBAT_SENSE	0	3	upper	$C0_H$	19.27V	3	2
					lower	$3A_H$	5.79V	2	2
Ch. 1	VS	VS supply voltage	0	3	upper	$C5_H$	19.78V	3	3
					lower	42_H	6.59V	2	3
Ch. 2	MON1	MON1	0	3	upper	FF_H	30.87V	0	3
					lower	00_H	0V	0	3
Ch. 3	MON2	MON2	0	3	upper	FF_H	30.87V	0	2
					lower	00_H	0V	0	2
Ch. 4	MON3	MON3	0	3	upper	FF_H	30.87V	0	0
					lower	00_H	0V	0	0
Ch. 5	MON4	MON4	0	3	upper	FF_H	30.87V	0	0
					lower	00_H	0V	0	0
Ch. 6	MON5/ P2.0	MON5 or P2.0 (device variant dependant)	0	3	upper	FF_H	30.87V / 5.50V	0	0
					lower	00_H	0V	0	0
Ch. 7	P2.1	P2.1	0	3	upper	FF_H	5.50V	0	0
					lower	00_H	0V	0	0
Ch. 8	P2.2	P2.2	0	3	upper	FF_H	5.50V	0	0
					lower	00_H	0V	0	0
Ch. 9	P2.3	P2.3	0	3	upper	FF_H	5.50V	0	0
					lower	00_H	0V	0	0
Ch10	P2.6	P2.6	0	3	upper	FF_H	5.50V	0	0
					lower	00_H	0V	0	0
Ch11	P2.7	P2.7	0	3	upper	FF_H	5.50V	0	0
					lower	00_H	0V	0	0

1) Register MMODE0_11; 0 = range control, 1 = UV, 2 = OV
2) Register FILTCOEFF0_11; 0 = 1/2, 1 = 1/4, 2 = 1/8, 3 = 1/16
3) Bitfield CHn_UP / CHn_LOW
4) Bitfield HYST_UP_CHn / HYST_LO_CHn; 0 = hyst off, 1 = hyst 4, 2 = hyst 8, 3 = hyst 16
5) Bitfield CNT_UP_CHn / CNT_LO_CHn; 0 = 1 meas., 1 = 2 meas., 2 = 4 meas., 3 = 8 meas.

25 High-Voltage Monitor Input

25.1 Features

Features

- 4 or 5 (product variant dependant) High-voltage inputs with VS/2 threshold voltage
- Wake capability for system stop mode and system sleep mode
- Edge sensitive wake-up feature configurable for transitions from low to high, high to low or both directions
- MON inputs can also be evaluated with ADC in Active Mode, using adjustable threshold values (see also **Chapter 24**).
- Selectable pull-up and pull-down current sources available

25.2 Introduction

This module is dedicated to monitor external voltage levels above or below a specified threshold. Each MONx pin can further be used to detect a wake-up event by detecting a level change by crossing the selected threshold. This applies to any power mode. Further more each MONx pin can be sampled by the ADC as analog input.

25.2.1 Block Diagram

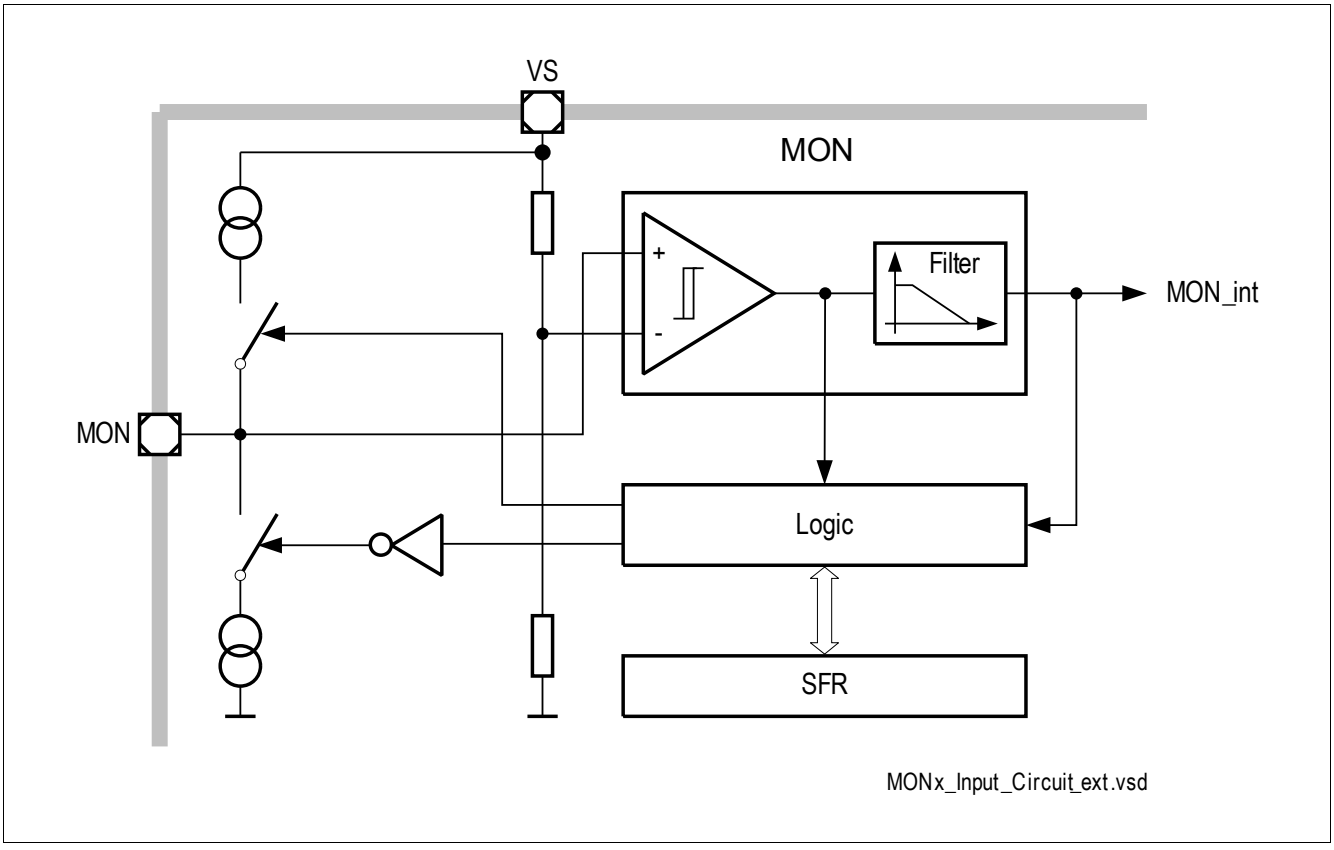

Figure 214 Monitoring Input Block Diagram

25.2.2 Functional Description

For a wake-up on a positive voltage transition, the **MONx_RISE** bit has to be configured. For a wake-up on a negative voltage transition, the corresponding bit **MONx_FALL** has to be set. This configuration can also be used for an edge detection in active mode.

As the system provides the functionality of cyclic sense, the MONx can be configured as a wake-up source for this mode. This is done by setting the bit **MONx_CYC**.

To enter power saving mode of the monitor input the Bit **MONx_NSLEEP** must be set to 0. With the transition of the Bit from 1 to 0 the level on the monitor input is saved for wake transition detection. The **MONx_NSLEEP** Bit is not changed by the hardware and therefore must be set and reset manually.

The MONx also includes an input circuit with pull-up (can be activated by **MONx_PU** bit) and pull-down (can be activated by **MONx_PD** Bit) current sources to define a certain voltage level with open inputs and a filter function to avoid wake-up events caused by unwanted voltage transients at the module input.

When automatic current source selection is enabled, a voltage level at the MONx input of $V_{MON_th} < V_{MONx} < V_s$-1V activates the pull-up current source. If the MONx voltage is between 1 V < V_{MONx} < V_{MON_th} the pull-down sink is activated, providing stable levels at the monitor inputs. Below and above these voltage ranges the current is minimized to a leakage current. This automatic activation of the current sources, has to be done by setting **MONx_PU** and **MONx_PD** bit to one at the same time.

Note: ***In case a Monitoring Input is deactivated by setting bit MONx_EN to zero, it can neither be used as a wake-up source nor can it be used to detect logic levels!***

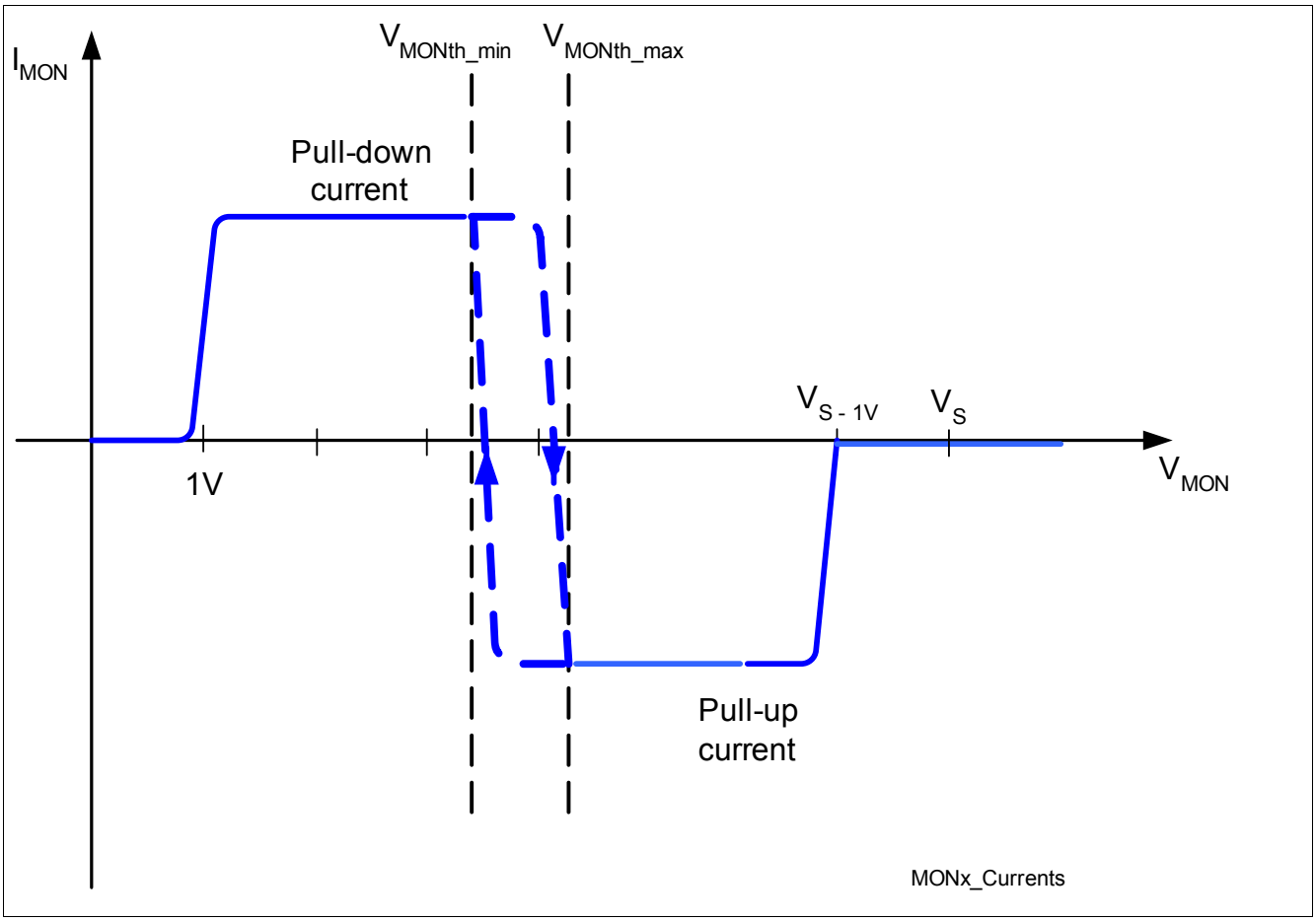

Figure 215 Module - HV_MON Input Characteristics for switchable pull current and static pull-down (on top) or pull-up

The following tables provides an overview of the configuration possibilities on the MON_INs via **XSFR**.

Table 496 includes all pull-up and pull-down setup scenarios which can be chosen for one MONx. **Table 497** shows an overview of the available states of a MONx.

Table 496 Pull-Up / Pull-Down Input Current

MONx_PU	MONx_PD	Output Current	Description
l0	0	leakage current[1)]	pull-up/down current source disabled
l0	1	pull-down	pull-down current source enabled (for low active switches)
1	0	pull-up	pull-up current source enabled (for high active switches)
1	1	switchable[2)]	pull-up/down depending on input voltage

1) all current sources switched off.

2) will be automatically switched by the MONx circuit depending on level of input signal.

Table 497 MONx_EN and MONx_NSleep MON Mode definition

MONx_EN	MONx_NSLEEP	Mode	Description
0	0	disabled[1)]	Monitoring input is disabled (no wake-up possible!)
0	1	disabled	Monitoring input is disabled (no wake-up possible!)
1	0	power saving mode	Monitoring input is set to power saving mode (use for device Sleep Mode and Stop Mode)
1	1	normal mode	Monitoring input is in active mode

1) if a MONx is disabled it cannot be used as a wake-up source anymore.

25.3 Register Definition

This chapter describes the configuration registers for MON1-MON5.

Table 498 Register Address Space for PMU Registers

Module	Base Address	End Address	Note
PMU	50004000_H	$50004FFF_H$	Power Management Unit Registers

Table 499 Register Overview

Register Short Name	Register Long Name	Offset Address	Reset Value
Register Definition, Monitor Input Registers			
PMU_MON_CNF1	Settings Monitor 1-4	034_H	4747 4747_H
PMU_MON_CNF2	Settings Monitor 5	038_H	0000 0047_H

The registers are addressed bytewise.

25.3.1 Monitor Input Registers

The monitor input registers are part of the PMU. This is due to the fact that this circuit requires supply (VDD1V5_PD_A) and clock, (LP_CLK) during system wide sleep and Stop modes.

Settings Monitor 1-4

PMU_MON_CNF1	Offset	Reset Value
Settings Monitor 1-4	034_H	see Table 500

31	30	29	28	27	26	25	24	23	22	21	20	19	18	17	16
MON4_STS	RES	MON4_PU	MON4_PD	MON4_CYC	MON4_RI*	MON4_FA*	MON4_EN	MON3_STS	RES	MON3_PU	MON3_PD	MON3_CYC	MON3_RI*	MON3_FA*	MON3_EN
r	r	rw	rw	rw	rw	rw	rw	r	r	rw	rw	rw	rw	rw	rw
15	14	13	12	11	10	9	8	7	6	5	4	3	2	1	0
MON2_STS	RES	MON2_PU	MON2_PD	MON2_CYC	MON2_RI*	MON2_FA*	MON2_EN	MON1_STS	RES	MON1_PU	MON1_PD	MON1_CYC	MON1_RI*	MON1_FA*	MON1_EN
r	r	rw	rw	rw	rw	rw	rw	r	r	rw	rw	rw	rw	rw	rw

Field	Bits	Type	Description
MON4_STS	31	r	**MON4 Status Input** *Note: the MON4 Status Input Bit is also updated in active mode of the device, when the HV MON4 input status changes. The user has to clear this flag before entering power saving modes otherwise the device will stay in active.* 0_B MON input has low status 1_B MON input has high status
RES	30	r	**Reserved** Always read as 1
MON4_PU	29	rw	**Pull-Up Current Source for MON4 Input Enable** *Note: Works only if MON4_EN is enabled* 0_B Pull-up source disabled 1_B Pull-up source enabled
MON4_PD	28	rw	**Pull-Down Current Source for MON4 Input Enable** *Note: Works only if MON4_EN is enabled* 0_B Pull-down source disabled 1_B Pull-down source enabled
MON4_CYC	27	rw	**MON4 for Cycle Sense Enable** *Note: Works only if MON4_EN is enabled* 0_B Cycle Sense disabled 1_B Cycle Sense enabled
MON4_RISE	26	rw	**MON4 Wake-up on Rising Edge Enable** *Note: Works only if MON4_EN is enabled* 0_B Wake-up disabled 1_B Wake-up enabled
MON4_FALL	25	rw	**MON4 Wake-up on Falling Edge Enable** *Note: Works only if MON4_EN is enabled* 0_B Wake-up disabled 1_B Wake-up enabled
MON4_EN	24	rw	**MON4 Enable** 0_B MON4 disabled 1_B MON4 enabled
MON3_STS	23	r	**MON3 Status Input** *Note: the MON3 Status Input Bit is also updated in active mode of the device, when the HV MON3 input status changes. The user has to clear this flag before entering power saving modes otherwise the device will stay in active.* 0_B MON input has low status 1_B MON input has high status

Field	Bits	Type	Description
RES	22	r	**Reserved** Always read as 1
MON3_PU	21	rw	**Pull-Up Current Source for MON3 Input Enable** *Note: Works only if MON3_EN is enabled* 0_B Pull-up source disabled 1_B Pull-up source enabled
MON3_PD	20	rw	**Pull-Down Current Source for MON3 Input Enable** *Note: Works only if MON3_EN is enabled* 0_B Pull-down source disabled 1_B Pull-down source enabled
MON3_CYC	19	rw	**MON3 for Cycle Sense Enable** *Note: Works only if MON3_EN is enabled* 0_B Cycle Sense disabled 1_B Cycle Sense enabled
MON3_RISE	18	rw	**MON3 Wake-up on Rising Edge Enable** *Note: Works only if MON3_EN is enabled* 0_B Wake-up disabled 1_B Wake-up enabled
MON3_FALL	17	rw	**MON3 Wake-up on Falling Edge Enable** *Note: Works only if MON3_EN is enabled* 0_B Wake-up disabled 1_B Wake-up enabled
MON3_EN	16	rw	**MON3 Enable** 0_B MON3 disabled 1_B MON3 enabled
MON2_STS	15	r	**MON2 Status Input** *Note: the MON2 Status Input Bit is also updated in active mode of the device, when the HV MON2 input status changes. The user has to clear this flag before entering power saving modes otherwise the device will stay in active.* 0_B MON input has low status 1_B MON input has high status
RES	14	r	**Reserved** Always read as 1
MON2_PU	13	rw	**Pull-Up Current Source for MON2 Input Enable** *Note: Works only if MON2_EN is enabled* 0_B Pull-up source disabled 1_B Pull-up source enabled

Field	Bits	Type	Description
MON2_PD	12	rw	**Pull-Down Current Source for MON2 Input Enable** *Note: Works only if MON2_EN is enabled* 0_B Pull-down source disabled 1_B Pull-down source enabled
MON2_CYC	11	rw	**MON2 for Cycle Sense Enable** *Note: Works only if MON2_EN is enabled* 0_B Cycle Sense disabled 1_B Cycle Sense enabled
MON2_RISE	10	rw	**MON2 Wake-up on Rising Edge Enable** *Note: Works only if MON2_EN is enabled* 0_B Wake-up disabled 1_B Wake-up enabled
MON2_FALL	9	rw	**MON2 Wake-up on Falling Edge Enable** *Note: Works only if MON2_EN is enabled* 0_B Wake-up disabled 1_B Wake-up enabled
MON2_EN	8	rw	**MON2 Enable** 0_B MON2 disabled 1_B MON2 enabled
MON1_STS	7	r	**MON1 Status Input** *Note: the MON1 Status Input Bit is also updated in active mode of the device, when the HV MON1 input status changes. The user has to clear this flag before entering power saving modes otherwise the device will stay in active.* 0_B MON input has low status 1_B MON input has high status
RES	6	r	**Reserved** Always read as 1
MON1_PU	5	rw	**Pull-Up Current Source for MON1 Input Enable** *Note: Works only if MON1_EN is enabled* 0_B Pull-up source disabled 1_B Pull-up source enabled
MON1_PD	4	rw	**Pull-Down Current Source for MON1 Input Enable** *Note: Works only if MON1_EN is enabled* 0_B Pull-down source disabled 1_B Pull-down source enabled
MON1_CYC	3	rw	**MON1 for Cycle Sense Enable** *Note: Works only if MON1_EN is enabled* 0_B Cycle Sense disabled 1_B Cycle Sense enabled

Field	Bits	Type	Description
MON1_RISE	2	rw	**MON1 Wake-up on Rising Edge Enable** *Note: Works only if MON1_EN is enabled* 0_B Wake-up disabled 1_B Wake-up enabled
MON1_FALL	1	rw	**MON1 Wake-up on Falling Edge Enable** *Note: Works only if MON1_EN is enabled* 0_B Wake-up disabled 1_B Wake-up enabled
MON1_EN	0	rw	**MON1 Enable** 0_B MON1 disabled 1_B MON1 enabled

Table 500 RESET of PMU_MON_CNF1

Register Reset Type	Reset Values	Reset Short Name	Reset Mode	Note
RESET_TYPE_2	47474747_H	RESET_TYPE_2		

Settings Monitor 5

PMU_MON_CNF2	Offset	Reset Value
Settings Monitor 5	038_H	see Table 501

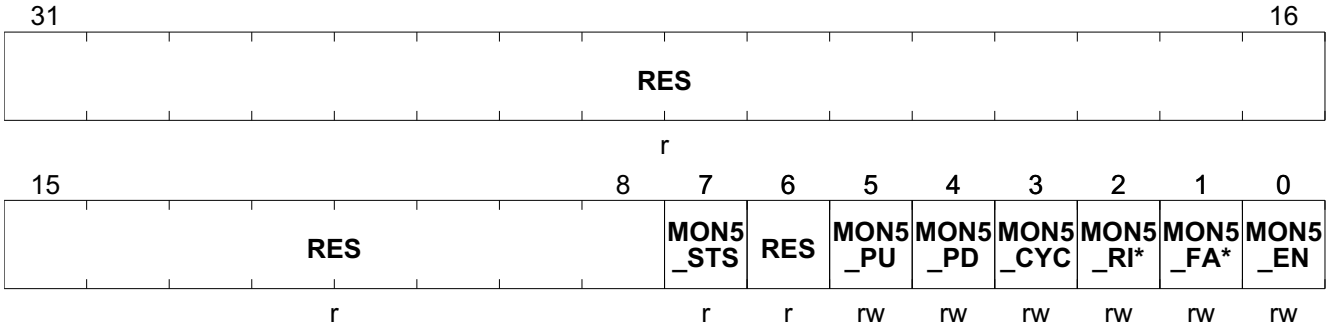

Field	Bits	Type	Description
RES	31:8	r	**Reserved** Always read as 0
MON5_STS	7	r	**MON5 Status Input** *Note: the MON5 Status Input Bit is also updated in active mode of the device, when the HV MON5 input status changes. The user has to clear this flag before entering power saving modes otherwise the device will stay in active.* 0_B MON input has low status 1_B MON input has high status

Field	Bits	Type	Description
RES	6	r	**Reserved** Always read as 1
MON5_PU	5	rw	**Pull-Up Current Source for MON5 Input Enable** *Note: Works only if MON5_EN is enabled* 0_B Pull-up source disabled 1_B Pull-up source enabled
MON5_PD	4	rw	**Pull-Down Current Source for MON5 Input Enable** *Note: Works only if MON1_EN is enabled* 0_B Pull-down source disabled 1_B Pull-down source enabled
MON5_CYC	3	rw	**MON5 for Cycle Sense Enable** *Note: Works only if MON5_EN is enabled* 0_B Cycle Sense disabled 1_B Cycle Sense enabled
MON5_RISE	2	rw	**MON5 Wake-up on Rising Edge Enable** *Note: Works only if MON1_EN is enabled* 0_B Wake-up disabled 1_B Wake-up enabled
MON5_FALL	1	rw	**MON5 Wake-up on Falling Edge Enable** *Note: Works only if MON5_EN is enabled* 0_B Wake-up disabled 1_B Wake-up enabled
MON5_EN	0	rw	**MON5 Enable** 0_B MON5 disabled 1_B MON5 enabled

Table 501 RESET of PMU_MON_CNF2

Register Reset Type	Reset Values	Reset Short Name	Reset Mode	Note
RESET_TYPE_2	00000047_H	RESET_TYPE_2		

26 High-Side Switch

26.1 Features

The high-side switch is optimized for driving resistive loads. Only small line inductance are allowed. Typical applications are single or multiple LEDs of a dashboard, switch illumination or other loads that require a high-side switch.

A cyclic switch activation during Sleep Mode or Stop Mode of the system is also available.

Functional Features

- Multi-purpose high-side switch for resistive load connections (only small line inductances are allowed)
- Overcurrent limitation
- Overcurrent detection with thresholds: 25 mA, 50 mA, 100 mA, 150 mA and automatic shutdown
- Overtemperature detection and automatic shutdown
- Open load detection in on mode with open load current of max. 1.5 mA.
- Interrupt signalling of overcurrent, overtemperature and open load condition
- Cyclic switch activation in Sleep Mode and Stop Mode with cyclic sense support and reduced driver capability: max. 40 mA
- PWM capability up to 25 kHz
- Internal connection to System-PWM Generator (CCU6)
- Slew rate control for low EMI characteristic

Applications hints

- The voltage at HSx must not exceed the supply voltage by more than 0.3V to prevent a reverse current from HSx to VS.

26.2 Introduction

26.2.1 Block Diagram

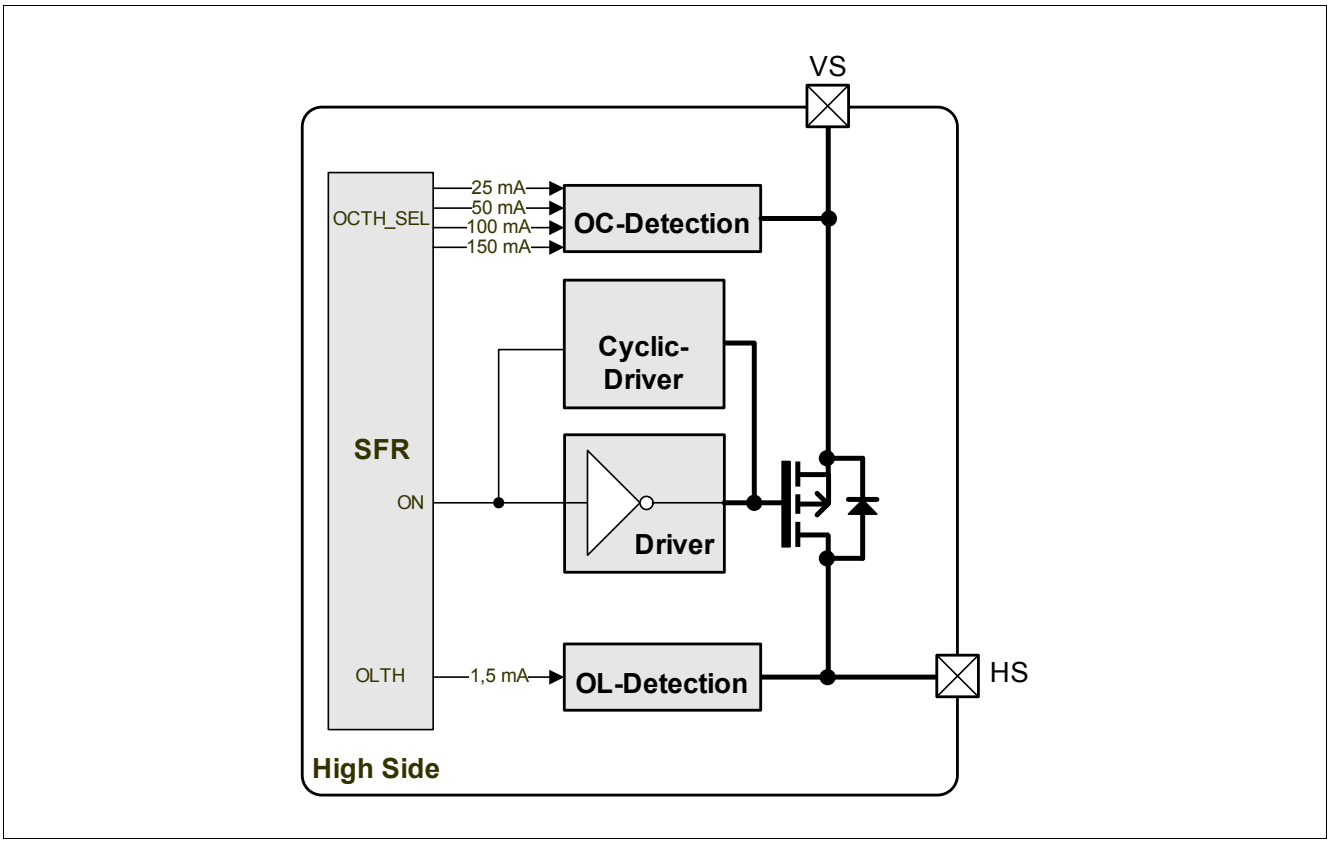

Figure 216 High-Side Module Block Diagram (incl. subblocks)

26.2.2 General

The high-side switch can generally be controlled in three different ways:

- In Normal mode the output stage is fully controllable through the **SFR** Registers **HSx_CTRL**. Protection functions as overcurrent, overtemperature and open load detection are available.
- The PWM Mode can also be enabled by a **HSx_CTRL - SFR** bit. The PWM configuration has to be done in the corresponding PWM Module. All protection functions are also available in this mode. The maximum PWM frequency must not exceed 25 kHz (disabled slew rate control only).
- The high-side switch provides also the possibility of cyclic switch activation in all low power modes (Sleep Mode and Stop Mode). In this configuration it has limited functionality with limited current capability. Diagnostic functions are not available in this mode.

26.3 Functional Description

26.3.1 Normal Operation

In normal operation mode (CPU normal mode, CPU slow down mode) the high-side switch provides functionalities and protection functions which are:

- **selectable Slew Rate Control** for improved EMI behavior.
- **Overcurrent Detection** with four different thresholds (min.): 25 mA, 50 mA, 100 mA and 150 mA.
- **Overtemperature Protection**, to protect the switch against overtemperature.
- **On-State Open Load Detection** with threshold lower than 1.5 mA typ.

In device stop mode and device sleep mode the high-side driver is switched off and disabled. The user software does not need to take care about the proper power down sequence of this module. This is done by hardware.

In stop mode, the configuration of the driver is kept inside the corresponding sfrs. If the driver was switched on before entering stop mode, after a wakeup its status is restored automatically.

26.3.1.1 Slew Rate Configuration

The high-side switch provides two slew rate configuration possibilities:

- 10V/µs (up to 5 kHz PWM frequency).
- 30V/µs (above 5 kHz PWM frequency).

The configuration can be done by flag HSx_SRCTL_SEL. The slew rate configuration is also taken for the pwm mode.

26.3.1.2 Overcurrent Detection

To configure the proper overcurrent threshold the corresponding bits **HSx_OC_SEL** in the **HSx_CTRL - SFR** have to be set. If an overcurrent condition is present, the high-side switch will be automatically turned off. In parallel the flag **HSx_OC_IS** is set and the **HSx_ON flag and HSx_PWM flag is cleared**. To enable the high-side switch again, it is recommended to clear the **HSx_OC_IS** flag and then set the **HSx_ON** bit to reactivate the switch. Clearing only the **HSx_OC_IS** flag, would not turn the switch automatically on. If the overcurrent condition is still present, the switch will be disabled once again.

26.3.1.3 Overtemperature Detection

If overtemperature condition appears, the switch will shutdown and the corresponding bit **HSx_OT_STS** is set. To reenable the high-side switch, the same procedure as for the overcurrent condition has to be applied. Due to the fact that overtemperature condition is removed very slowly (device has to cool down) in comparison to the CPU time base, it is recommended to clear the status flag and to check if it is set again immediately after clearing, before trying to switch the driver on again.

26.3.1.4 ON-State Open Load Detection

The high-side open load detection in ON State is mainly performed by the overcurrent detection and its fixed threshold of typ. 1.5 mA. If the current flowing through the output stage of the high-side switch falls below the value of typ. 1.5 mA, the corresponding status flag **OL_STS** is set. The open load detection has no influence on operation of the high-side switch.

The open load condition will cause an interrupt if enabled by the user.

26.3.2 PWM Operation

In PWM mode the high-side switch has to be first enabled by the corresponding bits in the **HSx_CTRL** register. The related bits are described below. PWM_CHx in **Figure 217** can be set in register **HS_PWMSRCSEL**.

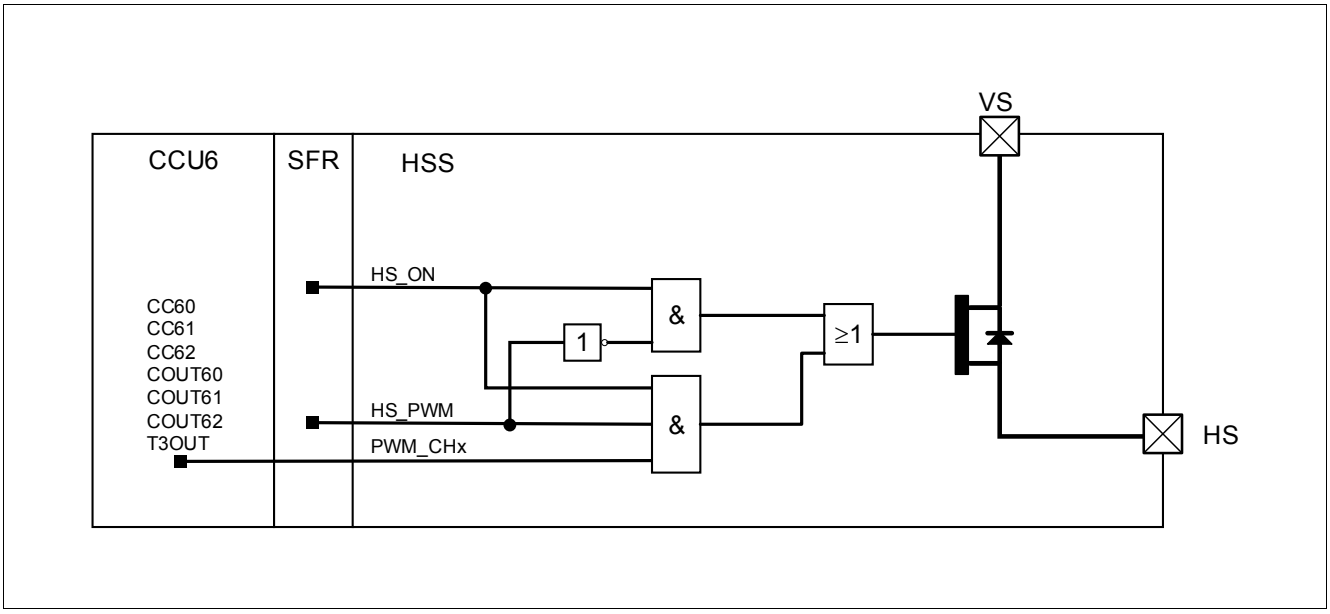

Figure 217 Combinatorial Control of High-Side Switch in PWM Mode

To avoid any output glitches on the HSx output, the **HSx_PWM** bit should be set first. After the function is enabled for PWM operation the corresponding PWM unit can be enabled.

For frequencies higher than 10 kHz, the slew rate setting has to be set to 30V/µs. Otherwise the internal power dissipation of the switch might damage the device.

In PWM mode all protection functions are available.

26.3.3 Cyclic Switching in Low Power Mode

In the cyclic sense power-saving mode the high-side switch cyclically supplies an external switch arrangement for a short time, just long enough to detect the position of the switch. The configuration procedure to use the high-side switch for cyclic sense operation, is described in the chapter **Power Management Unit**.

26.4 Register Definition

This chapter describes all necessary registers to control the high-side module and monitor its operation status.

Table 502 Register Address Space

Module	Base Address	End Address	Note
HS	40024000_H	$40027FFF_H$	High-Side Switch

Table 503 Register Overview

Register Short Name	Register Long Name	Offset Address	Reset Value
Register Definition, High-Side Switch Register			
HS_CTRL	High-Side Driver Control	04_H	$0000\ 0000_H$
HS_IRQS	High-Side Driver Interrupt Status	08_H	$0000\ 0000_H$
HS_IRQCLR	High-Side Driver Interrupt Status Clear Register	$0C_H$	$0000\ 0000_H$
HS_IRQEN	High-Side Driver Interrupt Enable Register	10_H	$0000\ 0000_H$
HS_PWMSRCSEL	High-Side PWM Source Selection Register	24_H	$0000\ 0000_H$
HS_HS1_TRIM	High-Side Driver 1 TRIM	$1C_H$	$0000\ 0000_H$
HS_HS2_TRIM	High-Side Driver 2 TRIM	20_H	$0000\ 0000_H$

The registers are addressed bytewise.

26.4.1 High-Side Switch Register

High-Side Control Register

HS_CTRL **Offset** **Reset Value**

High Side Driver Control **04_H** **see Table 504**

31	30	29	28	27	26	25	24	23	22	21	20	19	18	17	16
Res		HS2_OC_SEL		Res			HS2_SRC*	HS2_CYC*	Res			HS2_OL_*	HS2_ON	HS2_PWM	HS2_EN
r		rw		r			rw	rwhir	r			rw	rwhrs	rwhir	rwhrs

15	14	13	12	11	10	9	8	7	6	5	4	3	2	1	0
Res		HS1_OC_SEL		Res			HS1_SRC*	HS1_CYC*	Res			HS1_OL_*	HS1_ON	HS1_PWM	HS1_EN
r		rw		r			rw	rwhir	r			rw	rwhrs	rwhir	rwhrs

Field	Bits	Type	Description
Res	31:30	r	**Reserved** Always read as 0
HS2_OC_SEL	29:28	rw	**High Side 1 Overcurrent Threshold Selection** 0_H **IOCTH0** 25 mA min. 1_H **IOCTH1** 50 mA min. 2_H **IOCTH1** 100 mA min. 3_H **IOCTH3** 150 mA min.
Res	27:25	r	**Reserved** Always read as 0
HS2_SRCTL_SEL	24	rw	**High Side 2 Slew Rate Control select** 0_B **Slew Rate 1** Slew Rate 10V/µs is enabled 1_B **Slew Rate 2** Slew Rate 30V/µs is enabled
HS2_CYC_ON_ACTIVE	23	rwhir	**High Side 2 Cyclic ON Driver** 0_B **OFF** Cyclic ON Driver OFF 1_B **ON** Cyclic ON Driver ON
Res	22:20	r	**Reserved** Always read as 0
HS2_OL_EN	19	rw	**High Side 2 Open Load Detection Enable** 0_B **DISABLE** disable open load detection 1_B **ENABLE** enable open load detection
HS2_ON	18	rwhrs	**High Side 2 On** 0_B **OFF** HS driver off 1_B **ON** HS driver on
HS2_PWM	17	rwhir	**High Side 2 PWM Enable** *Note: this flag has higher priority then HS2_ON* 0_B **DISABLE** disables control by PWM input 1_B **ENABLE** enables control by PWM input
HS2_EN	16	rwhrs	**High Side 2 Enable** 0_B **DISABLE** HS circuit power off 1_B **ENABLE** HS circuit power on
Res	15:14	r	**Reserved** Always read as 0
HS1_OC_SEL	13:12	rw	**High Side 1 Overcurrent Threshold Selection** 0_H **IOCTH0** 25 mA min. 1_H **IOCTH1** 50 mA min. 2_H **IOCTH1** 100 mA min. 3_H **IOCTH3** 150 mA min.
Res	11:9	r	**Reserved** Always read as 0
HS1_SRCTL_SEL	8	rw	**High Side 1 Slew Rate Control select** 0_B **Slew Rate 1** Slew Rate 10V/µs is enabled 1_B **Slew Rate 2** Slew Rate 30V/µs is enabled

Field	Bits	Type	Description
HS1_CYC_ON_ACTIVE	7	rwhir	**High Side 1 Cyclic ON Driver** 0_B **OFF** Cyclic ON Driver OFF 1_B **ON** Cyclic ON Driver ON
Res	6:4	r	**Reserved** Always read as 0
HS1_OL_EN	3	rw	**High Side 1 Open Load Detection Enable** 0_B **DISABLE** disable open load detection 1_B **ENABLE** enable open load detection
HS1_ON	2	rwhrs	**High Side 1 On** 0_B **OFF** HS driver off 1_B **ON** HS driver on
HS1_PWM	1	rwhir	**High Side 1 PWM Enable** *Note: this flag has higher priority then HS1_ON* 0_B **DISABLE** disables control by PWM input 1_B **ENABLE** enables control by PWM input
HS1_EN	0	rwhrs	**High Side 1 Enable** 0_B **DISABLE** HS circuit power off 1_B **ENABLE** HS circuit power on

Table 504 RESET of HS_CTRL

Register Reset Type	Reset Values	Reset Short Name	Reset Mode	Note
RESET_TYPE_3	00000000_H	RESET_TYPE_3		

High-Side Interrupt Status Register

HS_IRQS — **High Side Driver Interrupt Status**

Offset 08_H

Reset Value see Table 505

31	30	29	28 … 24	23	22	21	20 … 16
Res	HS2_OL_*	HS2_OT_*	Res	HS2_OC_*	HS2_OL_*	HS2_OT_*	Res
r	rwhxr	rwhxr	r	rwhxr	rwhxre	rwhxre	r

15	14	13	12 … 8	7	6	5	4 … 0
Res	HS1_OL_*	HS1_OT_*	Res	HS1_OC_*	HS1_OL_*	HS1_OT_*	Res
r	rwhxr	rwhxr	r	rwhxr	rwhxre	rwhxre	r

Field	Bits	Type	Description
Res	31	r	**Reserved** Always read as 0

Field	Bits	Type	Description
HS2_OL_STS	30	rwhxr	**High Side 2 Open Load Interrupt Status** 0_B **no Open Load** no open load Condition occurred. 1_B **Open Load** open load occurred; switch is not automatically shutdown. Write sets status.
HS2_OT_STS	29	rwhxr	**High Side 2 Overtemperature Status** 0_B **no Overtemperature** no overtemperature occurred. 1_B **Overtemperature** overtemperature occurred; switch is automatically shutdown. Write sets status.
Res	28:24	r	**Reserved** Always read as 0
HS2_OC_IS	23	rwhxr	**High Side 2 Overcurrent Interrupt Status** 0_B **no Overcurrent** no overcurrent Condition occurred. 1_B **Overcurrent** overcurrent occurred; switch is automatically shutdown. Write sets status.
HS2_OL_IS	22	rwhxre	**High Side 2 Open Load Interrupt Status** 0_B **NORMAL** normal load 1_B **OPEN LOAD** open load detected, write sets status
HS2_OT_IS	21	rwhxre	**High Side 2 Overtemperature Interrupt Status** 0_B **no Overtemperature** no overtemperature occurred. 1_B **Overtemperature** overtemperature occurred; switch is automatically shutdown. Write sets status
Res	20:15	r	**Reserved** Always read as 0
HS1_OL_STS	14	rwhxr	**High Side 1 Open Load Interrupt Status** 0_B **no Open Load** no open load Condition occurred. 1_B **Open Load** open load occurred; switch is not automatically shutdown. Write sets status.
HS1_OT_STS	13	rwhxr	**High Side 1 Overtemperature Status** 0_B **no Overtemperature** no overtemperature occurred. 1_B **Overtemperature** overtemperature occurred; switch is automatically shutdown. Write sets status.
Res	12:8	r	**Reserved** Always read as 0
HS1_OC_IS	7	rwhxr	**High Side 1 Overcurrent Interrupt Status** 0_B **no Overcurrent** no overcurrent Condition occurred. 1_B **Overcurrent** overcurrent occurred; switch is automatically shutdown. Write sets status.
HS1_OL_IS	6	rwhxre	**High Side 1 Open Load Interrupt Status** 0_B **NORMAL** normal load 1_B **OPEN LOAD** open load detected, write sets status
HS1_OT_IS	5	rwhxre	**High Side 1 Overtemperature Interrupt Status** 0_B **no Overtemperature** no overtemperature occurred. 1_B **Overtemperature** overtemperature occurred; switch is automatically shutdown. Write sets status
Res	4:0	r	**Reserved** Always read as 0

Table 505 RESET of HS_IRQS

Register Reset Type	Reset Values	Reset Short Name	Reset Mode	Note
RESET_TYPE_3	00000000_H	RESET_TYPE_3		

High-Side Interrupt Status Register Clear Register

HS_IRQCLR	Offset	Reset Value
High Side Driver Interrupt Status Clear Register	$0C_H$	see Table 506

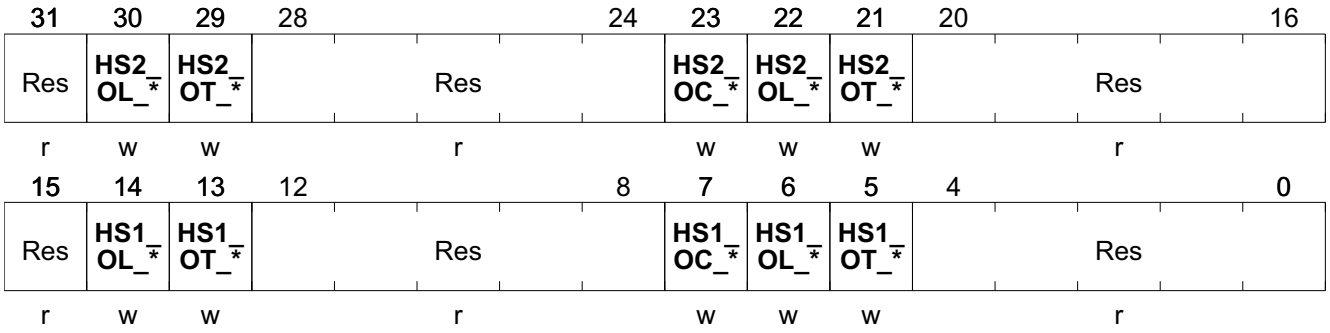

Field	Bits	Type	Description
Res	31	r	**Reserved** Always read as 0
HS2_OL_SC	30	w	**High Side 2 Open Load Status Clear** 0_B **no Clear** 1_B **Clear**
HS2_OT_SC	29	w	**High Side 2 Overtemperature Status Clear** 0_B **no Clear** 1_B **Clear**
Res	28:24	r	**Reserved** Always read as 0
HS2_OC_ISC	23	w	**High Side 2 Overcurrent Interrupt Status Clear** 0_B **no Clear** 1_B **Clear**
HS2_OL_ISC	22	w	**High Side 2 Open Load Interrupt Status Clear** 0_B **no Clear** 1_B **Clear**
HS2_OT_ISC	21	w	**High Side 2 Overtemperature Interrupt Status Clear** 0_B **no Clear** 1_B **Clear**
Res	20:15	r	**Reserved** Always read as 0
HS1_OL_SC	14	w	**High Side 1 Open Load Status Clear** 0_B **no Clear** 1_B **Clear**

Field	Bits	Type	Description
HS1_OT_SC	13	w	**High Side 1 Overtemperature Status Clear** 0_B **no Clear** 1_B **Clear**
Res	12:8	r	**Reserved** Always read as 0
HS1_OC_ISC	7	w	**High Side 1 Overcurrent Interrupt Status Clear** 0_B **no Clear** 1_B **Clear**
HS1_OL_ISC	6	w	**High Side 1 Open Load Interrupt Status Clear** 0_B **no Clear** 1_B **Clear**
HS1_OT_ISC	5	w	**High Side 1 Overtemperature Interrupt Status Clear** 0_B **no Clear** 1_B **Clear**
Res	4:0	r	**Reserved** Always read as 0

Table 506 RESET of HS_IRQCLR

Register Reset Type	Reset Values	Reset Short Name	Reset Mode	Note
RESET_TYPE_3	00000000_H	RESET_TYPE_3		

High-Side Interrupt Enable Register

HS_IRQEN	Offset	Reset Value
High Side Driver Interrupt Enable Register	10_H	see Table 507

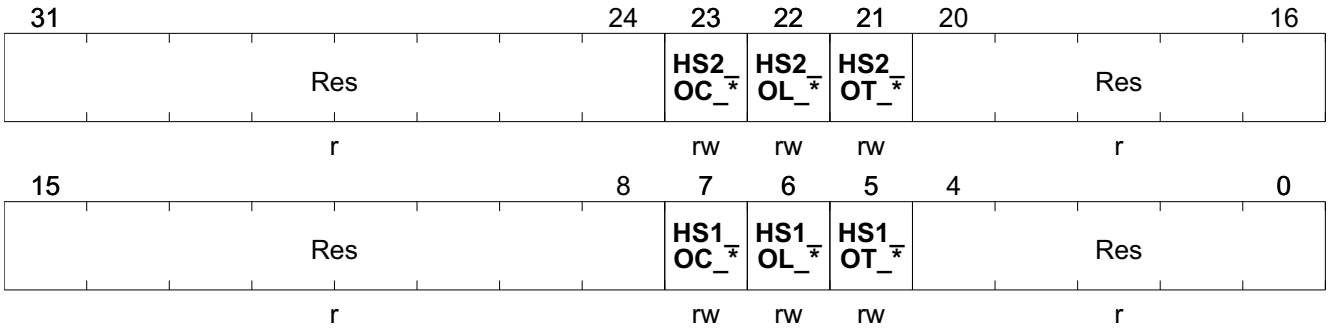

Field	Bits	Type	Description
Res	31:24	r	**Reserved** Always read as 0
HS2_OC_IEN	23	rw	**High Side 2 Overcurrent interrupt enable** 0_B **disable** 1_B **enable**

Field	Bits	Type	Description
HS2_OL_IEN	22	rw	**High Side 2 Open Load interrupt enable** 0_B **disable** 1_B **enable**
HS2_OT_IEN	21	rw	**High Side 2 Overtemperature interrupt enable** 0_B **disabled** 1_B **enable**
Res	20:8	r	**Reserved** Always read as 0
HS1_OC_IEN	7	rw	**High Side 1 Overcurrent interrupt enable** 0_B **disable** 1_B **enable**
HS1_OL_IEN	6	rw	**High Side 1 Open Load interrupt enable** 0_B **disable** 1_B **enable**
HS1_OT_IEN	5	rw	**High Side 1 Overtemperature interrupt enable** 0_B **disabled** 1_B **enable**
Res	4:0	r	**Reserved** Always read as 0

Table 507 RESET of HS_IRQEN

Register Reset Type	Reset Values	Reset Short Name	Reset Mode	Note
RESET_TYPE_3	00000000_H	RESET_TYPE_3		

High-Side PWM Source Selection Register

HS_PWMSRCSEL	Offset	Reset Value
High Side PWM Source Selection Register	**24_H**	**see Table 508**

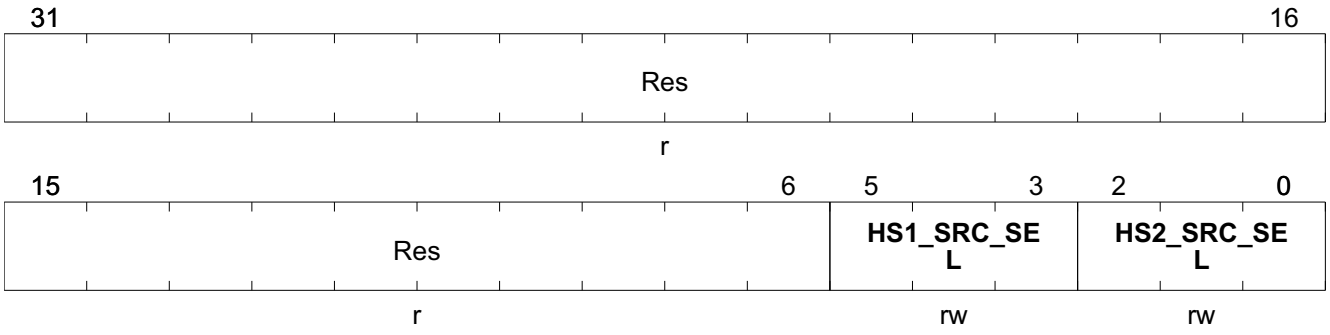

Field	Bits	Type	Description
Res	31:6	r	**Reserved** Always read as 0

Field	Bits	Type	Description
HS1_SRC_SEL	5:3	rw	**HS1 PWM Source Selection** **Note: Can only be written when HS_CTRL.HS1_PWM = 0** 0000_B**CC60** PWM output of CCU6 0001_B**CC61** PWM output of CCU6 0010_B**CC62** PWM output of CCU6 0011_B**COUT60** PWM output of CCU6 0100_B**COUT61** PWM output of CCU6 0101_B**COUT62** PWM output of CCU6 0110_B**T3OUT** PWM output of GPT12
HS2_SRC_SEL	2:0	rw	**HS2 PWM Source Selection** **Note: Can only be written when HS_CTRL.HS2_PWM = 0** 0000_B**CC60** PWM output of CCU6 0001_B**CC61** PWM output of CCU6 0010_B**CC62** PWM output of CCU6 0011_B**COUT60** PWM output of CCU6 0100_B**COUT61** PWM output of CCU6 0101_B**COUT62** PWM output of CCU6 0110_B**T3OUT** PWM output of GPT12

Table 508 RESET of HS_PWMSRCSEL

Register Reset Type	Reset Values	Reset Short Name	Reset Mode	Note
RESET_TYPE_3	00000000_H	RESET_TYPE_3		

High-Side Driver 1 TRIM Register

HS_HS1_TRIM	Offset	Reset Value
High Side Driver 1 TRIM	$1C_H$	see Table 509

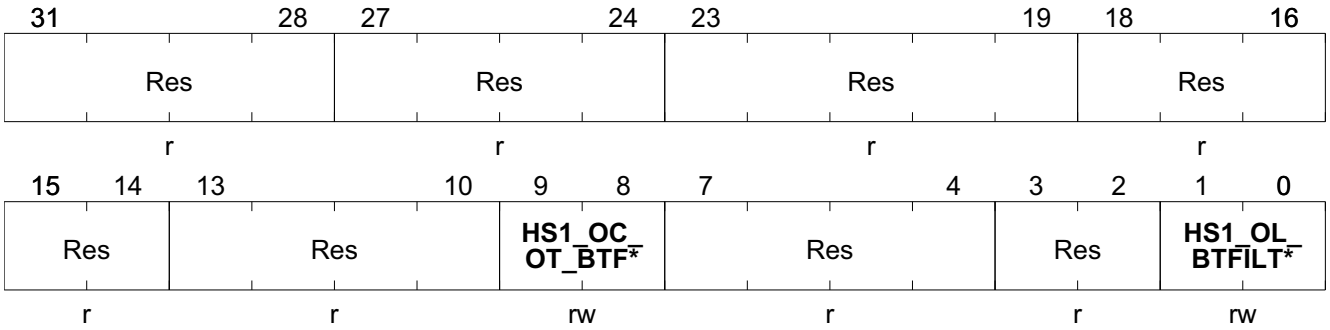

Field	Bits	Type	Description
Res	31:28	r	**Reserved** Always read as 0
Res	27:24	r	**Reserved** Always read as 0
Res	23:19	r	**Reserved** Always read as 0

Field	Bits	Type	Description
Res	18:16	r	**Reserved** Always read as 0
Res	15:14	r	**Reserved** Always read as 0
Res	13:10	r	**Reserved** Always read as 0
HS1_OC_OT_BTFILT_SEL	9:8	rw	**Blanking Time Filter Select for HS1 Overcurrent / Overtemperature Detection** 00_B **4_us** 4 µs filter time 01_B **8_us** 8 µs filter time 10_B **16_us** 16 µs filter time 11_B **32_us** 32 µs filter time
Res	7:4	r	**Reserved** Always read as 0
Res	3:2	r	**Reserved** Always read as 0
HS1_OL_BTFILT_SEL	1:0	rw	**Blanking Time Filter Select for HS1 Open Load Detection** 00_B **2_us** 4 µs filter time 01_B **4_us** 8 µs filter time 10_B **8_us** 16 µs filter time 11_B **16_us** 32 µs filter time

Table 509 RESET of HS_HS1_TRIM

Register Reset Type	Reset Values	Reset Short Name	Reset Mode	Note
RESET_TYPE_4	00000000_H	RESET_TYPE_4		

High-Side Driver 2 TRIM Register

HS_HS2_TRIM	Offset	Reset Value
High Side Driver 2 TRIM	20_H	see Table 510

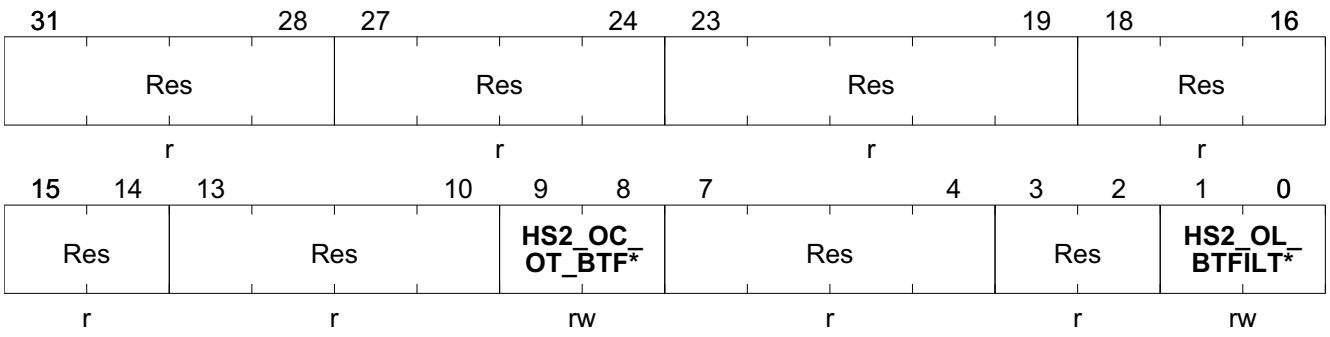

Field	Bits	Type	Description
Res	31:28	r	**Reserved** Always read as 0
Res	27:24	r	**Reserved** Always read as 0
Res	23:19	r	**Reserved** Always read as 0
Res	18:16	r	**Reserved** Always read as 0
Res	15:14	r	**Reserved** Always read as 0
Res	13:10	r	**Reserved** Always read as 0
HS2_OC_OT_BTFILT_SEL	9:8	rw	**Blanking Time Filter Select for HS2 Overcurrent / Overtemperature Detection** 00_B **4_us** 4 µs filter time 01_B **8_us** 8 µs filter time 10_B **16_us** 16 µs filter time 11_B **32_us** 32 µs filter time
Res	7:4	r	**Reserved** Always read as 0
Res	3:2	r	**Reserved** Always read as 0
HS2_OL_BTFILT_SEL	1:0	rw	**Blanking Time Filter Select for HS2 Open Load Detection** 00_B **2_us** 4 µs filter time 01_B **4_us** 8 µs filter time 10_B **8_us** 16 µs filter time 11_B **16_us** 32 µs filter time

Table 510 RESET of HS_HS2_TRIM

Register Reset Type	Reset Values	Reset Short Name	Reset Mode	Note
RESET_TYPE_4	00000000_H	RESET_TYPE_4		

26.5 Interrupt Generation - and Status Bit Logic

The interrupt flags of the high side module are having the following behaviour:

Overcurrent detection: the overcurrent detection interrupt flag is a level sensitive interrupt flag. This flag is set when the overcurrent condition occurs and stays persistent until the condition is removed.

Overtemperature detection: the overtemperature detection interrupt flag is a level sensitive interrupt flag. This flag is set when the overtemperature condition occurs, but can be cleared immediately. The overtemperature status of the overtemperature condition can then still be monitored in the dedicated status register, which is placed in the same interrupt status register.

Open load detection: the open load detection interrupt flag is a level sensitive interrupt flag. This flag is set when the open condition occurs, but can be cleared immediately. The open load status of the open load condition can then still be monitored in the dedicated status register, which is placed in the same interrupt status register.

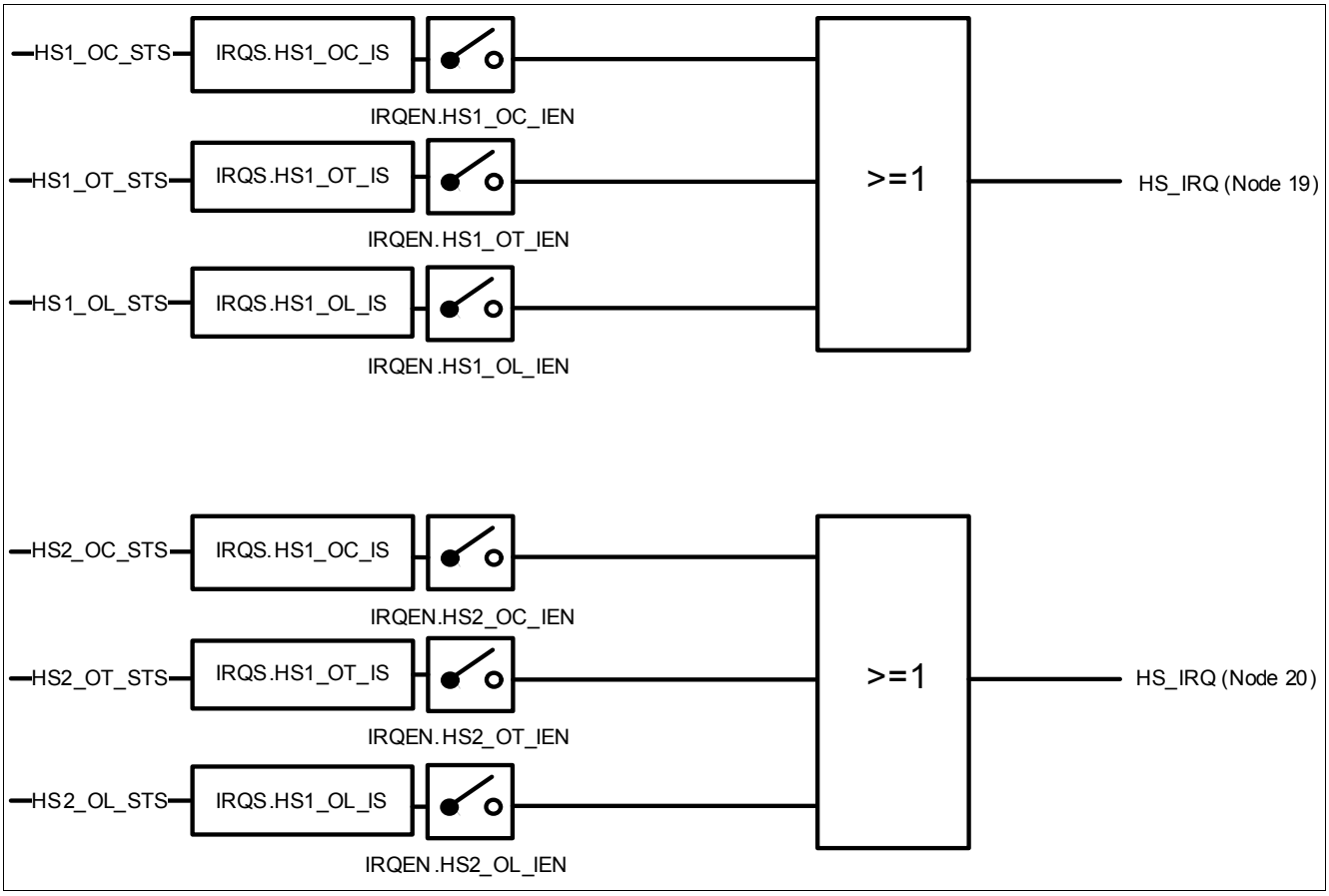

Figure 218 High Side 1 / 2 Switch Interrupt Generation

26.6 Application Information

If the High Side module is used as offboard pin the following external circuitry is mandatory:

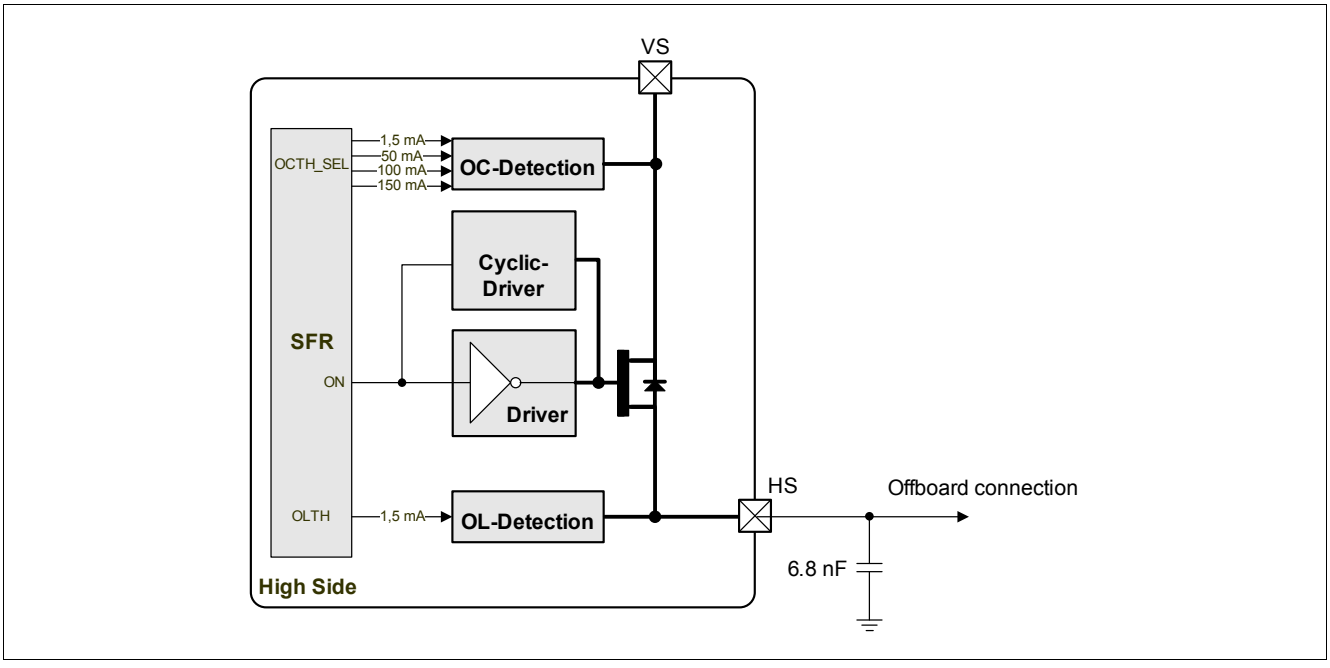

Figure 219 Circuitry Mandatory for use as Offboard Pin

If the High Side module is used as offboard pin a 6.8 nF is needed as buffer capacitor.

27 Low-Side Switch

27.1 Features

The general purpose low-side switch is optimized to control an on-board relay. The low-side switch provides embedded protection functions including overcurrent and overtemperature detection. The module is designed for on-board connections.

Measures for standard ESD (HBM) and EMC robustness are implemented.

Functional Features

- Multi purpose low-side switch optimized for driving relays:
  - simple relay driver
  - PWM relay driver
- Integrated clamping for usage as a simple relay driver
- overcurrent detection and automatic shutdown
- overtemperature detection and automatic shutdown
- interrupt signalling of overcurrent and overtemperature condition
- open load detection with interrupt signalling
- PWM capability up to 25 kHz (for inductive loads with external clamping circuitry only!)
- Selectable PWM source: dedicated CCU6 channels
- Current drive capability up to min. 270 mA

Applications hints

- It is not recommended to use the switch in PWM Mode without external free wheeling diode. See **Chapter 27.2.2.1**

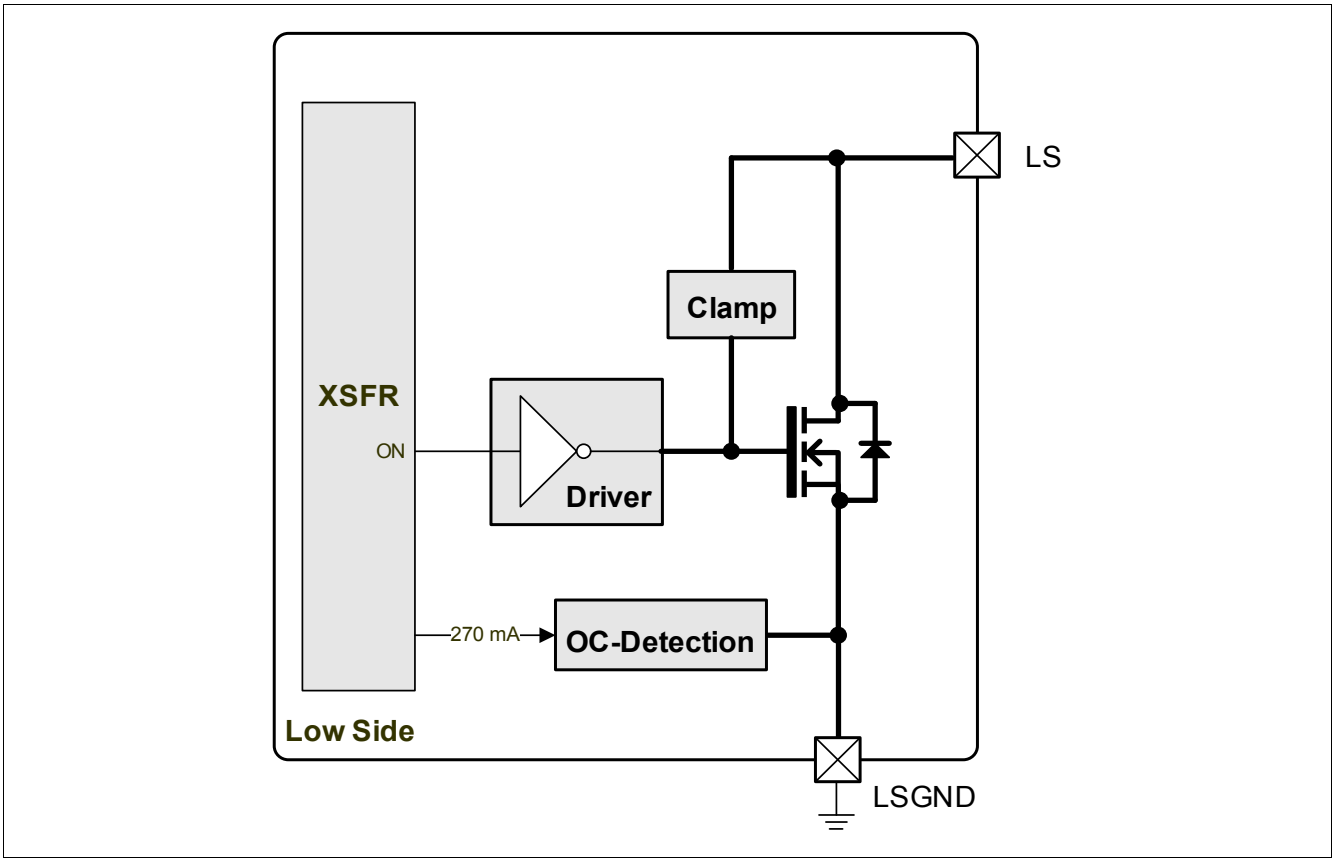

Figure 220 Module Block Diagram

27.2 Functional Description

The low-side switches can generally be controlled in two different ways:

- In normal mode the output stage is fully controllable through the **SFR** Registers **LSx_CTRL**. Protection functions as overcurrent and overtemperature are available.
- The PWM Mode can also be enabled by a **LSx_CTRL - SFR** bit. The PWM configuration has to be done in the corresponding PWM Module (CCU6). All protection functions are also available in this mode. The maximum PWM frequency must not exceed 25 kHz (fast slew rate only).

27.2.1 Normal Operation

In normal operation mode (CPU normal mode, CPU slow down mode) the low-side switch provides functionalities and protection functions which are:

- **selectable Slew Rate Control** for improved EMI behavior.
- **Overcurrent Detection** with four different thresholds (min.): 270 mA.
- **Overtemperature Protection**, to protect the switch against overtemperature.

In device stop mode and device sleep mode the low-side driver is switched off and disabled. The user software does not need to take care about the proper power down sequence of this module. This is done by hardware.

In stop mode the configuration of the driver is kept inside the corresponding sfrs. If the driver was switched on before entering stop mode, after a wakeup its status is restored automatically.

27.2.1.1 Slew Rate Configuration

The low-side switch provides two slew rate configuration possibilities:

- 10V/µs (up to 5 kHz PWM frequency).
- 30V/µs (above 5 kHz PWM frequency).

The configuration can be done by flag LSx_SRCTL_SEL. The slew rate configuration is also taken for the pwm mode.

27.2.1.2 Overcurrent Detection

If an overcurrent condition is present, the low-side switches will be automatically turned off. In parallel the flag **LSx_OC_STS** is set and the LSx_ON flag is cleared. To enable the low-side switch again, it is recommended to clear the **LSx_OC_STS** flag and then set the **LSx_ON** bit to reactivate the switch. Clearing only the **LSx_OC_STS** flag, would not turn the switch automatically on. If the overcurrent condition is still present, the switch will be disabled once again.

27.2.1.3 Overtemperature Detection

If overtemperature condition appears, the switch will shutdown and the corresponding bit **LSx_OT_STS** is set. To reenable the low-side switches, the same procedure as for the overcurrent condition has to be applied. Due to the fact that overtemperature condition is removed very slowly (device has to cool down) in comparison to the CPU time base, it is recommended to clear the status flag and to check if it is set again immediately after clearing, before trying to switch the driver on again.

27.2.2 Operation of Low-Side Switch in PWM Mode

The low-side switch can also be operated in PWM Mode. To enable the PWM Mode of the Low-Side switch, the corresponding bits **LSx_PWM** and **LSx_ON** in the control register LSx_CTRL have to be set. The implemented combinatorial logic is shown in the next figure. PWM_CHx in **Figure 221** can be set in register **LS_PWMSRCSEL**.

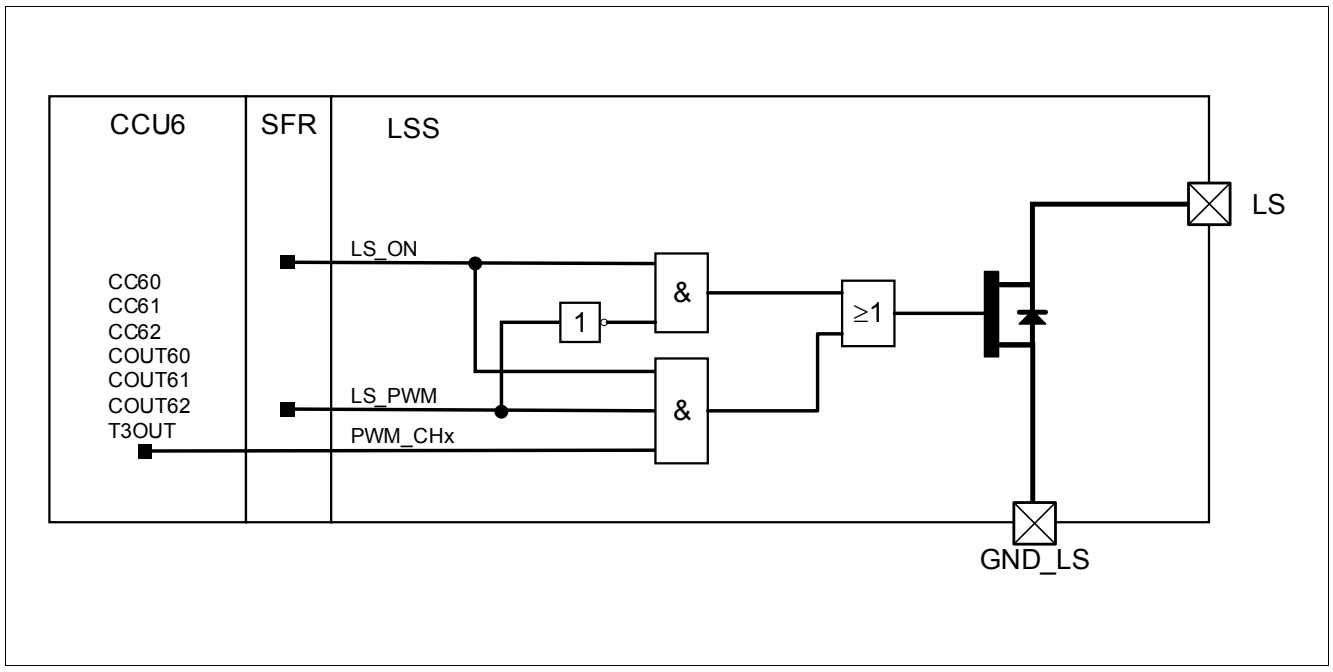

Figure 221 Module PWM Usage of Low-Side Switch

27.2.2.1 Application Requirement for Low-Side Switch in PWM Mode

The low-side switch is not designed, to handle the amount of energy, which is generated by switching an inductive load in PWM Mode. Therefore an external free wheeling diode is required to absorb the generated energy. The picture below shows the possible application diagram for this case.

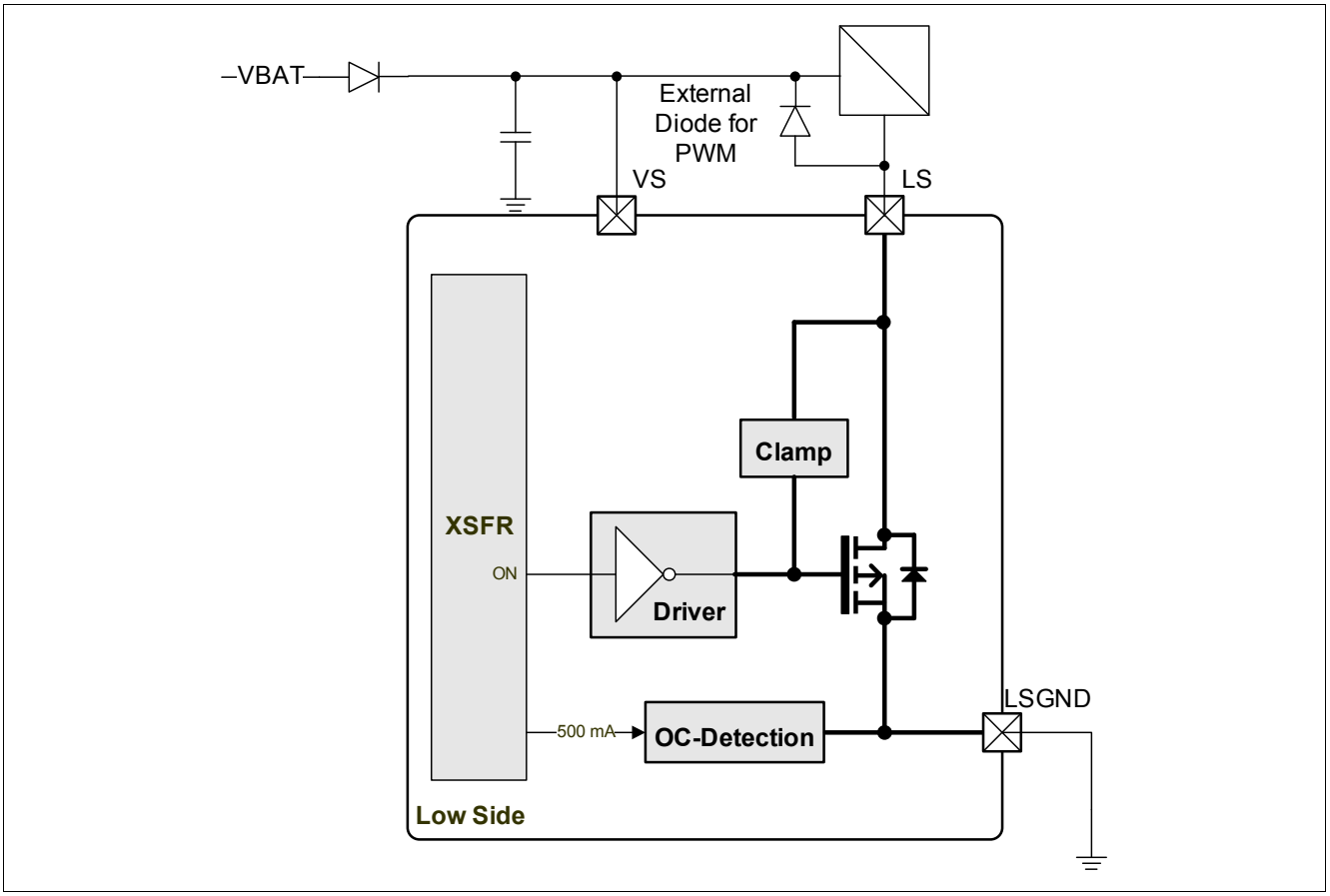

Figure 222 Module Block Diagram (with interconnects and ext. components).

27.3 Register Definition

Table 511 Register Address Space

Module	Base Address	End Address	Note
LS	$4001C000_H$	$4001FFFF_H$	

Table 512 Register Overview

Register Short Name	Register Long Name	Offset Address	Reset Value
Register Definition, Low-Side Switches Registers			
LS_CTRL	Low-Side Driver Control	04_H	see **Table 513**
LS_IRQS	Low-Side Driver Interrupt Status	08_H	see **Table 514**
LS_IRQCLR	Low-Side Driver Interrupt Status Register Clear	$0C_H$	see **Table 515**
LS_IRQEN	Low-Side Driver Interrupt Enable Register	10_H	see **Table 516**
LS_PWMSRCSEL	Low-Side PWM Source Selection Register	$1C_H$	see **Table 517**
LS_LS1_TRIM	Low-Side 1 Reference Current Trimming Register	18_H	see **Table 518**
LS_LS2_TRIM	Low-Side 2 Reference Current Trimming Register	20_H	see **Table 519**

The registers are addressed bytewise.

27.3.1 Low-Side Switches Registers

Low-Side Driver Control Register

LS_CTRL	Offset	Reset Value
Low Side Driver Control	04_H	see Table 513

31	25	24	23	20	19	18	17	16
Res		LS2_SRC*	Res		LS2_OL_*	LS2_ON	LS2_PWM	LS2_EN
r		rw	r		rw	rwhir	rwhir	rw

15	9	8	7	4	3	2	1	0
Res		LS1_SRC*	Res		LS1_OL_*	LS1_ON	LS1_PWM	LS1_EN
r		rw	r		rw	rwhir	rwhir	rw

Field	Bits	Type	Description
Res	31:25	r	**Reserved** Always read as 0
LS2_SRCTL_SEL	24	rw	**Low-Side switch 2 Slew Rate selection** 0_B **Slow** slow slew rate is selected 1_B **Fast** fast slew rate is selected
Res	23:20	r	**Reserved** Always read as 0
LS2_OL_EN	19	rw	**Open load Detection Enable** 0_B **DISABLE** Open load detection 1_B **ENABLE** Open load detection
LS2_ON	18	rwhir	**Low-Side switch 2 On/Off** 0_B **OFF** switches LS2 off 1_B **ON** turns on LS2
LS2_PWM	17	rwhir	**Low-Side switch 2 PWM Enable** *Note: this flag has higher priority then LS2_ON* 0_B **DISABLE** normal mode controlled by LS2_ON 1_B **ENABLE** enables LS2 for PWM mode
LS2_EN	16	rw	**Low-Side switch 2 Enable** 0_B **DISABLE** disables LS2 1_B **ENABLE** enables LS2
Res	15:9	r	**Reserved** Always read as 0
LS1_SRCTL_SEL	8	rw	**Low-Side switch 1 Slew Rate selection** 0_B **Slow** slow slew rate is selected 1_B **Fast** fast slew rate is selected
Res	7:4	r	**Reserved** Always read as 0
LS1_OL_EN	3	rw	**Open load Detection Enable** 0_B **DISABLE** Open load detection 1_B **ENABLE** Open load detection
LS1_ON	2	rwhir	**Low-Side switch 1 On/Off** 0_B **OFF** switches LS1 off 1_B **ON** turns on LS1
LS1_PWM	1	rwhir	**Low-Side switch 1 PWM Enable** *Note: this flag has higher priority then LS1_ON* 0_B **DISABLE** normal mode controlled by LS1_ON 1_B **ENABLE** enables LS1 for PWM mode
LS1_EN	0	rw	**Low-Side switch 1 Enable** 0_B **DISABLE** disables LS1 1_B **ENABLE** enables LS1

Table 513 RESET of LS_CTRL

Register Reset Type	Reset Values	Reset Short Name	Reset Mode	Note
RESET_TYPE_3	00000000_H	RESET_TYPE_3		

Low-Side Driver Interrupt Status Register

LS_IRQS	Offset	Reset Value
Low Side Driver Interrupt Status	08_H	see Table 514

31	30	29	28	27 … 24	23	22	21	20	19 … 16
Res	LS2_OL_*	LS2_OT_*	LS2_OT_*	Res	LS2_OC_*	LS2_OL_*	LS2_OT_*	LS2_OT_*	Res
r	rwhxr	rwhxr	rwhxr	r	rwhxr	rwhxre	rwhxre	rwhxre	r

15	14	13	12	11 … 8	7	6	5	4	3 … 0
Res	LS1_OL_*	LS1_OT_*	LS1_OT_*	Res	LS1_OC_*	LS1_OL_*	LS1_OT_*	LS1_OT_*	Res
r	rwhxr	rwhxr	rwhxr	r	rwhxr	rwhxre	rwhxre	rwhxre	r

Field	Bits	Type	Description
Res	31	r	**Reserved** Always read as 0
LS2_OL_STS	30	rwhxr	**Low-Side 2 Open Load Status** 0_B **no Open Load** no open load Condition occurred. 1_B **Open Load** open load occurred; switch is not automatically shutdown. Write sets status.
LS2_OT_STS	29	rwhxr	**Low-Side 2 Overtemperature Status** 0_B **no Overtemperature** no overtemperature occurred. 1_B **Overtemperature** overtemperature occurred; switch is automatically shutdown. Write sets status
LS2_OT_PREWARN_STS	28	rwhxr	**Low-Side 2 Overtemperature Prewarning Status** 0_B **no Overtemperature Prewarn** no overtemperature prewarn occurred. 1_B **Overtemperature** overtemperature prewarn occurred; Write sets status
Res	27:24	r	**Reserved** Always read as 0
LS2_OC_IS	23	rwhxr	**Low-Side 2 Overcurrent Interrupt Status** 0_B **no Overcurrent** no overcurrent Condition occurred. 1_B **Overcurrent** overcurrent occurred; switch is automatically shutdown. Write sets status.
LS2_OL_IS	22	rwhxre	**Low-Side 2 Open Load Interrupt Status** 0_B **no Open Load** no open load Condition occurred. 1_B **Open Load** open load occurred; switch is not automatically shutdown. Write sets status.

Field	Bits	Type	Description
LS2_OT_IS	21	rwhxre	**Low-Side 2 Overtemperature Interrupt Status** 0_B **no Overtemperature** no overtemperature occurred. 1_B **Overtemperature** overtemperature occurred; switch is automatically shutdown. Write sets status
LS2_OT_PREWARN_IS	20	rwhxre	**Low-Side 2 Overtemperature Prewarning Interrupt Status** 0_B **no Overtemperature Prewarn** no overtemperature prewarn occurred. 1_B **Overtemperature Prewarn** overtemperature prewarn occurred. Write sets status
Res	19:15	r	**Reserved** Always read as 0
LS1_OL_STS	14	rwhxr	**Low-Side 1 Open Load Status** 0_B **no Open Load** no open load Condition occurred. 1_B **Open Load** open load occurred; switch is not automatically shutdown. Write sets status.
LS1_OT_STS	13	rwhxr	**Low-Side 1 Overtemperature Status** 0_B **no Overtemperature** no overtemperature occurred. 1_B **Overtemperature** overtemperature occurred; switch is automatically shutdown. Write sets status
LS1_OT_PREWARN_STS	12	rwhxr	**Low-Side 1 Overtemperature Prewarning Status** 0_B **no Overtemperature Prewarn** no overtemperature prewarn occurred. 1_B **Overtemperature** overtemperature prewarn occurred; Write sets status
Res	11:8	r	**Reserved** Always read as 0
LS1_OC_IS	7	rwhxr	**Low-Side 1 Overcurrent Interrupt Status** 0_B **no Overcurrent** no overcurrent Condition occurred. 1_B **Overcurrent** overcurrent occurred; switch is automatically shutdown. Write sets status.
LS1_OL_IS	6	rwhxre	**Low-Side 1 Open Load Interrupt Status** 0_B **no Open Load** no open load Condition occurred. 1_B **Open Load** open load occurred; switch is not automatically shutdown. Write sets status.
LS1_OT_IS	5	rwhxre	**Low-Side 1 Overtemperature Interrupt Status** 0_B **no Overtemperature** no overtemperature occurred. 1_B **Overtemperature** overtemperature occurred; switch is automatically shutdown. Write sets status
LS1_OT_PREWARN_IS	4	rwhxre	**Low-Side 1 Overtemperature Prewarning Interrupt Status** 0_B **no Overtemperature Prewarn** no overtemperature prewarn occurred. 1_B **Overtemperature Prewarn** overtemperature prewarn occurred. Write sets status

Field	Bits	Type	Description
Res	3:0	r	**Reserved** Always read as 0

Table 514 RESET of LS_IRQS

Register Reset Type	Reset Values	Reset Short Name	Reset Mode	Note
RESET_TYPE_3	00000000_H	RESET_TYPE_3		

Low-Side Driver Interrupt Status Clear Register

LS_IRQCLR	Offset	Reset Value
Low Side Driver Interrupt Status Register Clear	$0C_H$	see Table 515

31	30	29	28	27	24	23	22	21	20	19	16
Res	LS2_OL_*	LS2_OT_*	LS2_OT_*	Res		LS2_OC_*	LS2_OL_*	LS2_OT_*	LS2_OT_*	Res	
r	w	w	w	r		w	w	w	w	r	

15	14	13	12	11	8	7	6	5	4	3	0
Res	LS1_OL_*	LS1_OT_*	LS1_OT_*	Res		LS1_OC_*	LS1_OL_*	LS1_OT_*	LS1_OT_*	Res	
r	w	w	w	r		w	w	w	w	r	

Field	Bits	Type	Description
Res	31	r	**Reserved** Always read as 0
LS2_OL_SC	30	w	**Low-Side 2 Open Load status clear** 0_B **no Clear** 1_B **Clear**
LS2_OT_SC	29	w	**Low-Side switch 2 Overtemperature status Clear** 0_H **No Clear** 1_H **Clear**
LS2_OT_PREWARN_SC	28	w	**Low-Side 2 Overtemperature prewarn status clear** 0_H **No Clear** 1_H **Clear**
Res	27:24	r	**Reserved** Always read as 0
LS2_OC_ISC	23	w	**Low-Side 2 Overcurrent interrupt status clear** 0_H **No Clear** 1_H **Clear**
LS2_OL_ISC	22	w	**Low-Side 2 Open Load interrupt status clear** 0_B **no Clear** 1_B **Clear**
LS2_OT_ISC	21	w	**Low-Side 2 Overtemperature interrupt status clear** 0_H **No Clear** 1_H **Clear**
LS2_OT_PREWARN_ISC	20	w	**Low-Side 2Overtemperature prewarn interrupt status clear** 0_H **No Clear** 1_H **Clear**
Res	19:15	r	**Reserved** Always read as 0

Field	Bits	Type	Description
LS1_OL_SC	14	w	**Low-Side 1 Open Load status clear** 0_B **no Clear** 1_B **Clear**
LS1_OT_SC	13	w	**Low-Side 1 Overtemperature status clear** 0_H **No Clear** 1_H **Clear**
LS1_OT_PREWARN_SC	12	w	**Low-Side 1 Overtemperature prewarn status clear** 0_H **No Clear** 1_H **Clear**
Res	11:8	r	**Reserved** Always read as 0
LS1_OC_ISC	7	w	**Low-Side 1 Overcurrent interrupt status clear** 0_H **No Clear** 1_H **Clear**
LS1_OL_ISC	6	w	**Low-Side 1 Open Load interrupt status clear** 0_B **no Clear** 1_B **Clear**
LS1_OT_ISC	5	w	**Low-Side 1 Overtemperature interrupt status clear** 0_H **No Clear** 1_H **Clear**
LS1_OT_PREWARN_ISC	4	w	**Low-Side 1 Overtemperature prewarn interrupt status clear** 0_H **No Clear** 1_H **Clear**
Res	3:0	r	**Reserved** Always read as 0

Table 515 RESET of LS_IRQCLR

Register Reset Type	Reset Values	Reset Short Name	Reset Mode	Note
RESET_TYPE_3	00000000_H	RESET_TYPE_3		

Low-Side Driver Interrupt Enable Register

LS_IRQEN	Offset	Reset Value
Low Side Driver Interrupt Enable Register	10_H	see Table 516

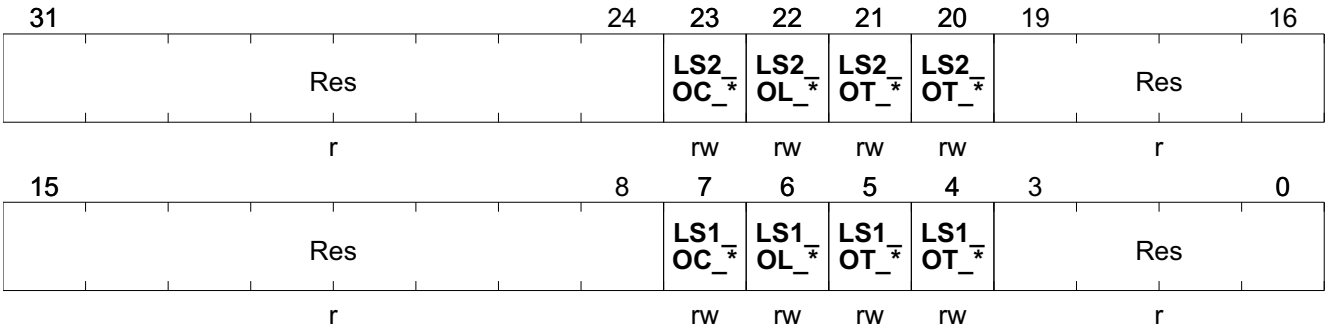

Field	Bits	Type	Description
Res	31:24	r	**Reserved** Always read as 0
LS2_OC_IEN	23	rw	**Low-Side 2 Overcurrent interrupt enable** 0_B **disable** 1_B **enable**
LS2_OL_IEN	22	rw	**Low-Side 2 Open Load interrupt enable** 0_B **disable** 1_B **enable**
LS2_OT_IEN	21	rw	**Low-Side 2 Overtemperature interrupt enable** 0_B **disabled** 1_B **enable**
LS2_OT_PREWARN_IEN	20	rw	**Low-Side 2 Overtemperature prewarn interrupt enable** 0_B **disabled** 1_B **enable**
Res	19:8	r	**Reserved** Always read as 0
LS1_OC_IEN	7	rw	**Low-Side 1 Overcurrent interrupt enable** 0_B **disable** 1_B **enable**
LS1_OL_IEN	6	rw	**Low-Side 1 Open Load interrupt enable** 0_B **disable** 1_B **enable**
LS1_OT_IEN	5	rw	**Low-Side 1 Overtemperature interrupt enable** 0_B **disabled** 1_B **enable**
LS1_OT_PREWARN_IEN	4	rw	**Low-Side 1 Overtemperature prewarn interrupt enable** 0_B **disabled** 1_B **enable**
Res	3:0	r	**Reserved** Always read as 0

Table 516 RESET of LS_IRQEN

Register Reset Type	Reset Values	Reset Short Name	Reset Mode	Note
RESET_TYPE_3	00000000_H	RESET_TYPE_3		

Low-Side PWM Source Selection Register

LS_PWMSRCSEL	Offset	Reset Value
Low Side PWM Source Selection Register	$1C_H$	see Table 517

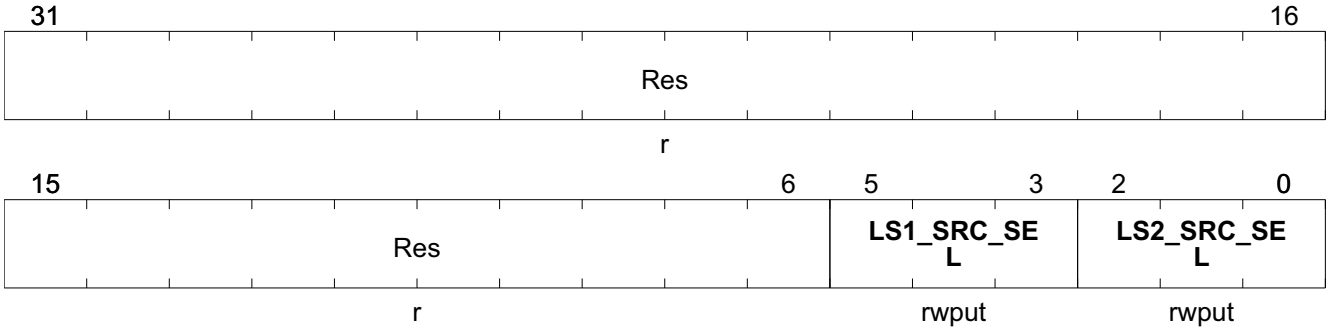

Field	Bits	Type	Description
Res	31:6	r	**Reserved** Always read as 0
LS1_SRC_SEL	5:3	rwput	**LS1 PWM Source Selection** **Note: Can be only written when LS_CTRL.LS1_PWM = 0** 0000_B**CC60** PWM output of CCU6 0001_B**CC61** PWM output of CCU6 0010_B**CC62** PWM output of CCU6 0011_B**COUT60** PWM output of CCU6 0100_B**COUT61** PWM output of CCU6 0101_B**COUT62** PWM output of CCU6 0110_B**T3OUT** PWM output of GPT12
LS2_SRC_SEL	2:0	rwput	**LS2 PWM Source Selection** **Note: Can be only written when LS_CTRL.LS2_PWM = 0** 0000_B**CC60** PWM output of CCU6 0001_B**CC61** PWM output of CCU6 0010_B**CC62** PWM output of CCU6 0011_B**COUT60** PWM output of CCU6 0100_B**COUT61** PWM output of CCU6 0101_B**COUT62** PWM output of CCU6 0110_B**T3OUT** PWM output of GPT12

Table 517 RESET of LS_PWMSRCSEL

Register Reset Type	Reset Values	Reset Short Name	Reset Mode	Note
RESET_TYPE_3	00000000_H	RESET_TYPE_3		

Low-Side 1 Reference Current Trimming Register

Control Functionality according **LS_LS1_TRIM**

Reset values of **LS_LS1_TRIM** according **Table 518**

LS_LS1_TRIM	Offset	Reset Value
Low Side Trimming Register	**18_H**	**see Table 518**

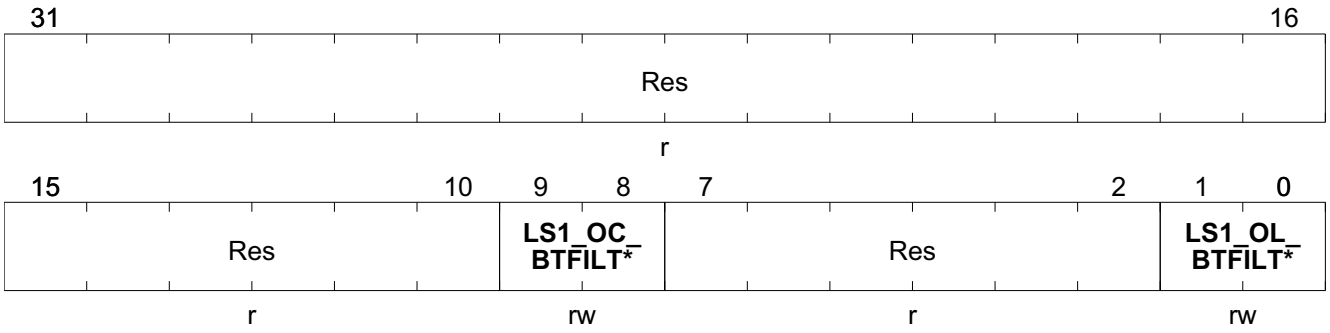

Field	Bits	Type	Description
Res	31:10	r	**Reserved** Always read as 0
LS1_OC_BTFILT_SEL	9:8	rw	**Overcurrent BlankTime Select for LS1** 00_B **4_us** 4 µs filter time 01_B **8_us** 8 µs filter time 10_B **16_us** 16 µs filter time 11_B **32_us** 32 µs filter time
Res	7:2	r	**Reserved** Always read as 0
LS1_OL_BTFILT_SEL	1:0	rw	**Open load Blank Time Select for LS1** 00_B **4_us** 4 µs filter time 01_B **8_us** 8 µs filter time 10_B **16_us** 16 µs filter time 11_B **32_us** 32 µs filter time

Table 518 RESET of LS_LS1_TRIM

Register Reset Type	Reset Values	Reset Short Name	Reset Mode	Note
RESET_TYPE_4	00000000_H	RESET_TYPE_4		

Low-Side 2 Reference Current Trimming Register

Control Functionality according **LS_LS2_TRIM**

Reset values of **LS_LS2_TRIM** according **Table 519**

LS_LS2_TRIM	Offset	Reset Value
Low Side Trimming Register	**20_H**	**see Table 519**

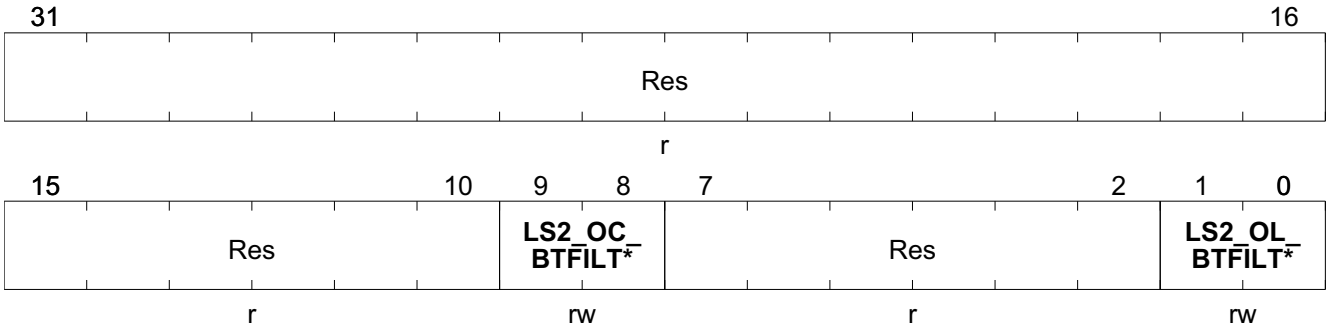

Field	Bits	Type	Description
Res	31:10	r	**Reserved** Always read as 0
LS2_OC_BTFILT_SEL	9:8	rw	**Overcurrent BlankTime Select for LS2** 00_B **4_us** 4 µs filter time 01_B **8_us** 8 µs filter time 10_B **16_us** 16 µs filter time 11_B **32_us** 32 µs filter time
Res	7:2	r	**Reserved** Always read as 0
LS2_OL_BTFILT_SEL	1:0	rw	**Open load Blank Time Select for LS2** 00_B **4_us** 4 µs filter time 01_B **8_us** 8 µs filter time 10_B **16_us** 16 µs filter time 11_B **32_us** 32 µs filter time

Table 519 RESET of LS_LS2_TRIM

Register Reset Type	Reset Values	Reset Short Name	Reset Mode	Note
RESET_TYPE_4	00000000_H	RESET_TYPE_4		

27.4 Interrupt Generation - and Status Bit Logic

The interrupt flags of the low-side module are having the following behaviour:

Overcurrent detection: the overcurrent detection interrupt flag is a level sensitive interrupt flag. This flag is set when the overcurrent condition occurs and stays persistent until the condition is removed.

Overtemperature detection: the overtemperature detection interrupt flag is a level sensitive interrupt flag. This flag is set when the overtemperature condition occurs, but can be cleared immediately. The overtemperature status of the overtemperature condition can then still be monitored in the dedicated status register, which is placed in the same interrupt status register.

Open Load detection: the open load detection interrupt flag is a level sensitive interrupt flag. This flag is set when the open condition occurs, but can be cleared immediately. The open load status of the open load condition can then still be monitored in the dedicated status register, which is placed in the same interrupt status register.

The status bit generation and also interrupt flag generation need a special treatment because of two reasons:

- when working the device in asynchronous mode the CPU frequency can be scaled down, while analog module clock will remain constant.
- analog module status can always be read without any loss of information when a diagnostic event occurs only very shortly.

The detailed implementation is described in the following chapter.

Status bit and interrupt flag generation according **Figure 1**

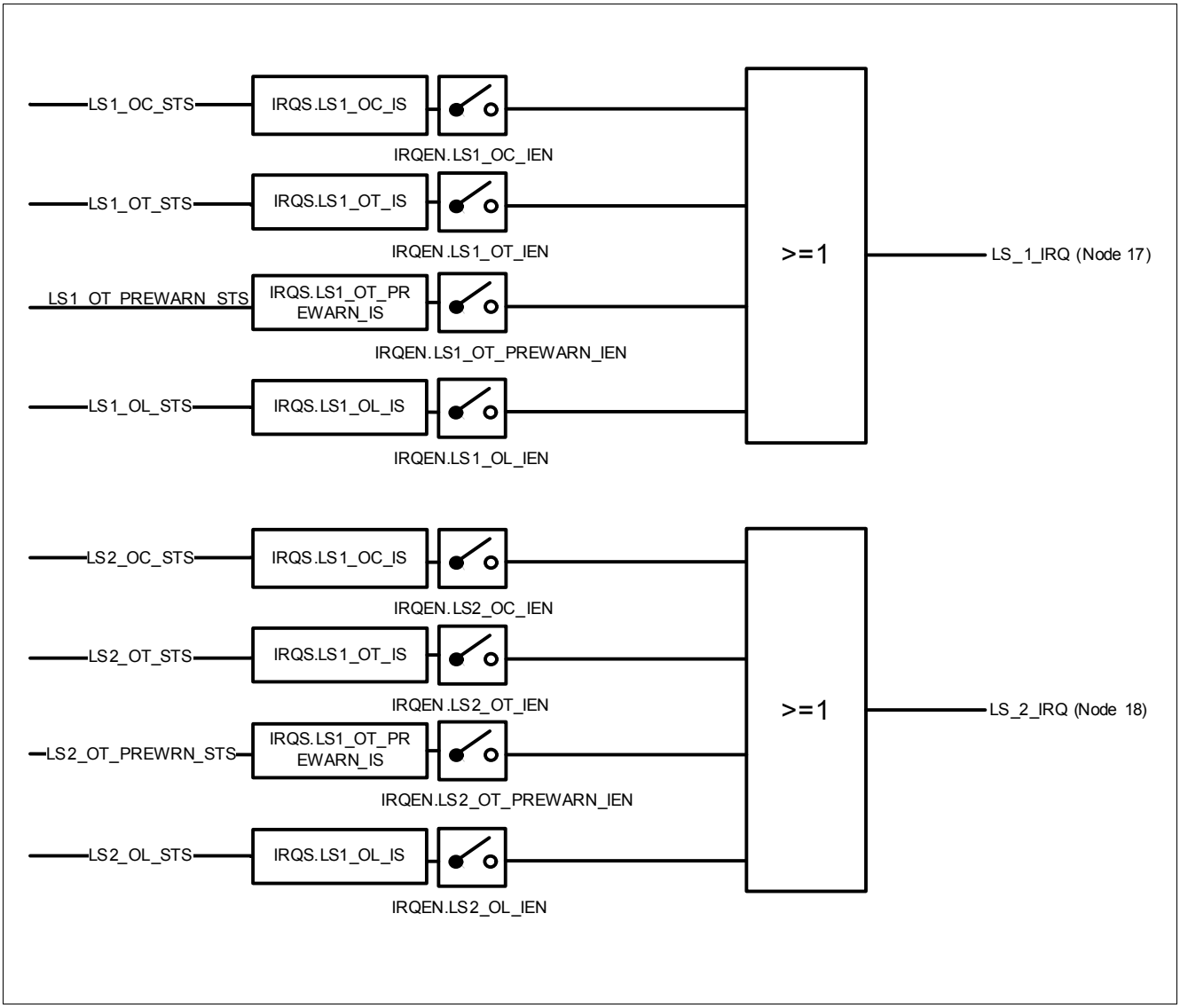

Figure 223 Low-Side 1 / 2 Switch Interrupt Generation

28 Application Information

Note: The following information is given as a hint for the implementation of the device only and shall not be regarded as a description or warranty of a certain functionality, condition or quality of the device.

28.1 Relay Window Lift Application diagram

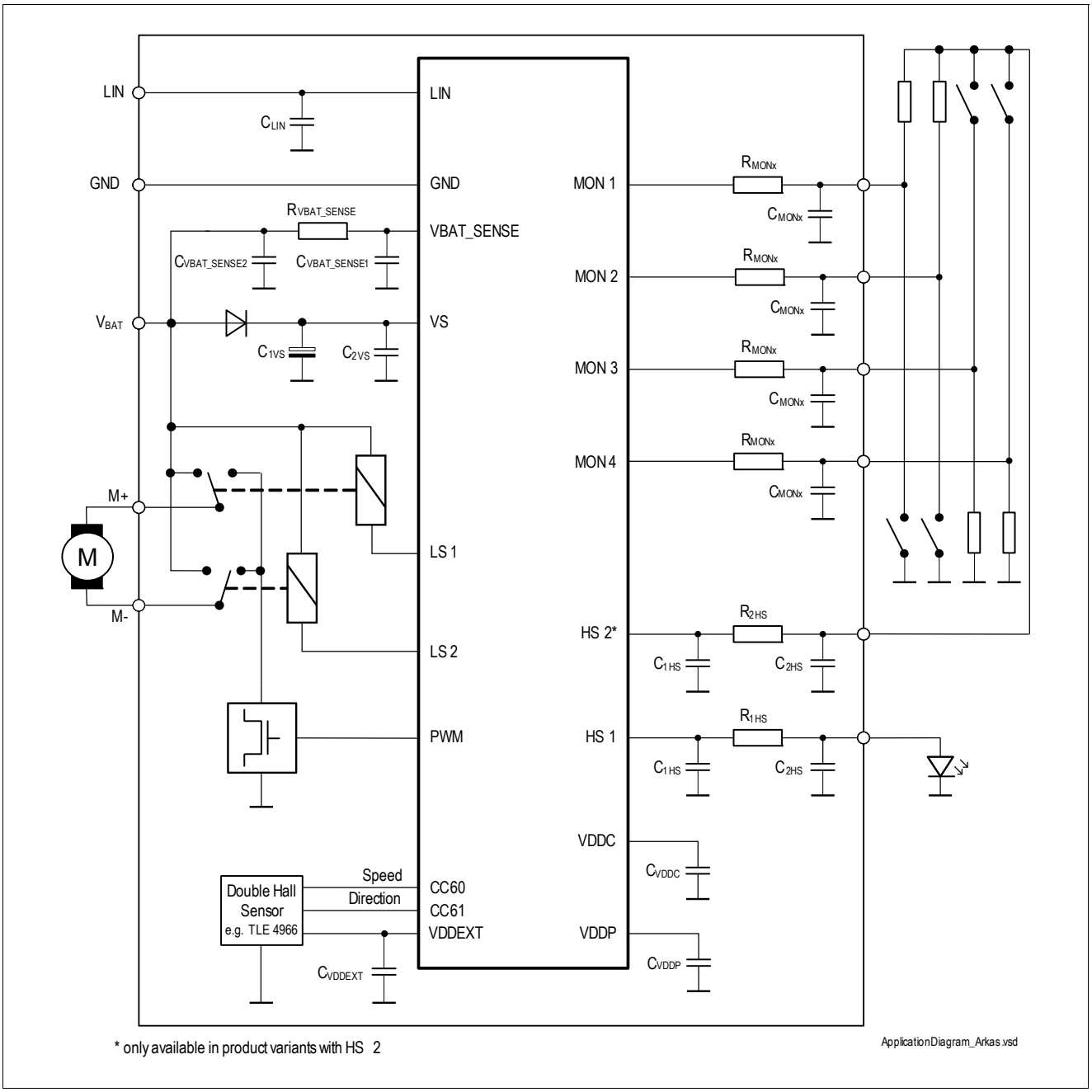

Figure 224 Simplified Application Diagram Example

Note: This is a very simplified example of an application circuit and bill of material. The function must be verified in the actual application.

Table 520 External Component (BOM)

Symbol	Function	Component
C_{1VS}	Capacitor 1 at VS pin	22 µF[1)]
C_{2VS}	Capacitor 2 at VS pin	100 nF[2)3)]
C_{VDDEXT}	Capacitor at VDDEXT pin	330 nF[2)]
C_{VDDC}	Capacitor at VDDC pin	100 nF[2)3)] + 330 nF[2)]
C_{VDDP}	Capacitor at VDDP pin	470 nF[2)3)] + 470 nF[2)]
R_{MONx}	Resistor at MONx pin	3.9 kΩ
C_{MONx}	Capacitor at MONx connector	6.8 nF[4)]
R_{VBAT_SENSE}	Resistor at VBAT_SENSE pin	3.9 kΩ
C_{VBAT_SENSE1}	Capacitor 1at VBAT_SENSE pin	10 nF[2)]
C_{VBAT_SENSE2}	Capacitor 2 at VBAT_SENSE connector	6.8 nF[4)]
C_{LIN}	Capacitor at LIN pin	220 pF
R_{1HS}	Resistor at HS pin for LED	e.g. 2.7kΩ
R_{2HS}	Resistor at HS pin	160 Ω[5)]
C_{1HS}	Capacitor at HS pin	6.8nF[2)]
C_{2HS}	Capacitor at HS connector	33nF[4)]

1) to be dimensioned according to application requirements
2) to reduce the effect of fast voltage transients of Vs, these capacitors should be placed close to the device pin
3) ceramic capacitor
4) for ESD GUN
5) optional, for short to battery protection, calculated for 24V (jump start)

28.2 Motor Drive with P/N-channel Power MOSFET Half Bridge Application (only TLE9845QX)

Note: The following information is given as a hint for the implementation of the device only and shall not be regarded as a description or warranty of a certain functionality, condition or quality of the device.

28.2.1 P/N-channel Half Bridge Application diagram

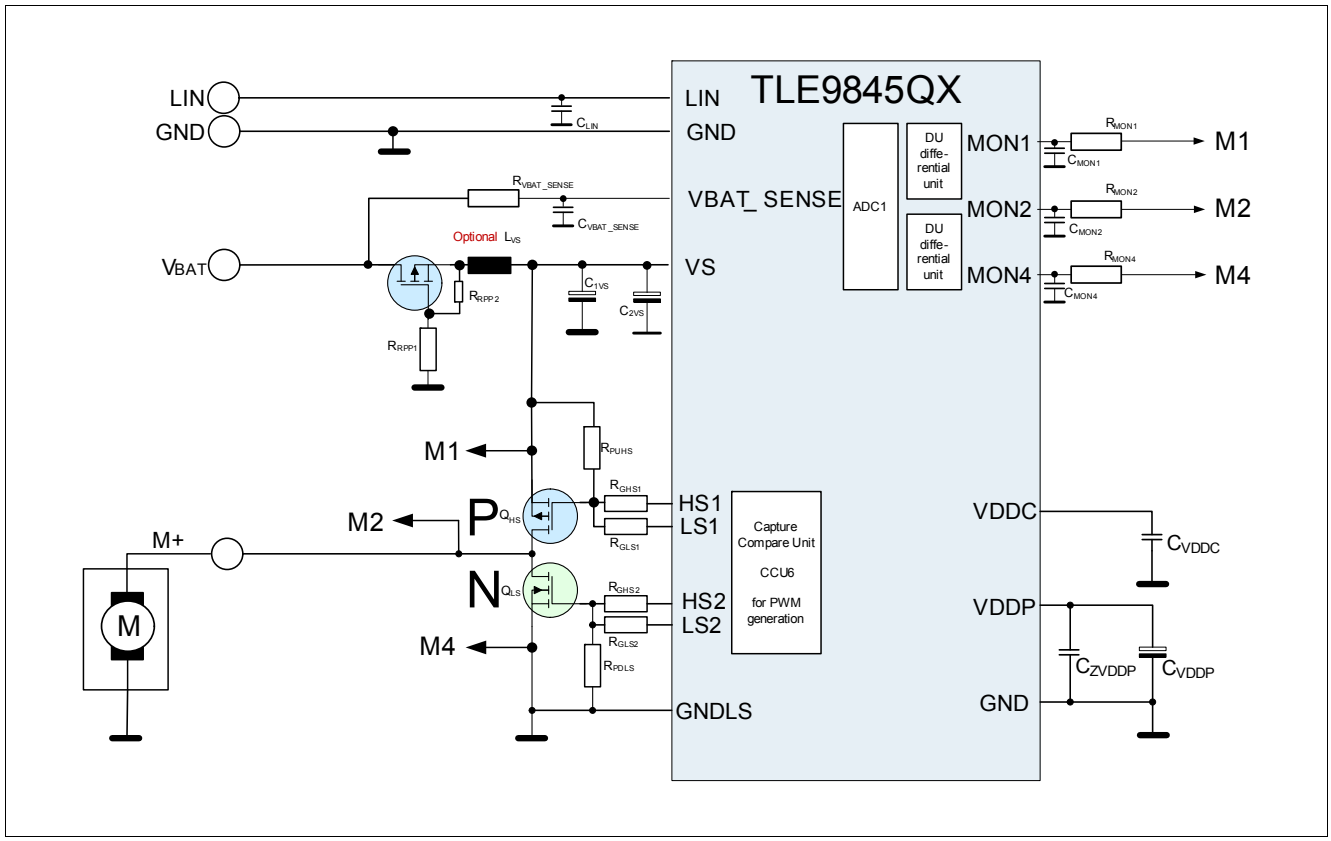

Figure 225 Scheme of relevant blocks used for single phase brushed-DC-motor control

28.2.2 Functional description

28.2.2.1 Gate Driver Stages

Figure 225 shows a simplified diagram with TLE984xQX in an electric drive application setup controlling an uni-directional brushed-DC-motor. The driver stages support two variants to drive the motor: The non controlled motor contact can be connected to battery or to ground potential.

The half bridge is built up with a P-channel power MOSFET in high-side and a N-channel power MOSFET in low-side position. The driver stage of the P- and N-channel MOSFET is provided by the outputs HS1/LS1 and HS2/LS2, respectively. Each pair of outputs builds up a push-pull gate driver stage with fixed supply to VS and ground. The driver stages are not limited to a maximum voltage. Therefore an additional zener diode between the gate and source of each MOSFET is recommended for protection.

For adjusting the required slope of the output voltage the resistors between the outputs HSx/LSx and the power MOSFET gate have to be dimensioned in a specific way according to the application requirements. It's further recommended to additionally connect the respective gate potentials to battery (P-channel) or ground (N-channel) by external resistors. This prevents the power half bridge from unwanted cross currents in case of a TLE984xQX reset condition (driver stage is high impedance).

28.2.2.2 PWM operation

TLE984xQX supports PWM controlled motor drive with active free-wheeling (i.e. synchronous switching of the half bridge MOSFETs to avoid body diode losses during PWM off phase) by using the CCU6 module.

The CCU6 can be configured to use the internal deadtime generation to control the switching delay between the external P-and N-channel MOSFETs of the half-bridge. In this case HSx and LSx are switched without any deadtime. The gate pre resistors has to be dimensioned expecting the max values.

28.2.2.3 MOSFET protection with integrated Differential Units for drain-source-monitoring

For emergency shut-off in case of short-to-GND or short-to-VBAT, the following protection scheme can be used.

For this feature, 3 of the MON inputs (e.g. MON1, MON2, MON4) are used in combination with 2 differential measurement units (MON1-MON2, MON2-MON4), that are located in ADC1.

The differential measurement units are sampled by the ADC1 and use the post processing for threshold supervision, interrupt generation and trap handling.

The ADC measurements are triggered from CCU6, i.e. aligned to the PWM signals.

28.3 Connection of N.C. / N.U. pins

The device contains several N.C. (not connected, no bond wire) and possibly N.U. (not used, but bonded) pins.

Table 521 Recommendation for connecting N.C. / N.U. pins

type	pin number	recommendation 1	recommendation 2	comment
N.C.	27, 28, 29, 38, 40, 41	GND		
N.C.	10, 46	open	GND	neighboring high-voltage pins
N.U.	4	VS	open	in device variants with one high side only, no HS2 (product variant dependant)
N.U.	9	GND		in device variants with four MON only, no MON5 (product variant dependant)

28.4 Connection of unused pins

Table 522 shows recommendations how to connect pins, in case they are not needed by the application.

Table 522 Recommendation for connecting unused pins

type	pin number	recommendation 1 (if unused)	recommendation 2 (if unused)
LIN	1	open	
HS1, HS2	3, 4	VS	open
MON	5, 6, 7, 8, 9	GND	open + configure internal PU/PD
LS1, LS2	11, 12	GNDLS	open
GPIO	14, 15, 16, 17, 20, 22, 23, 24, 25, 26, 33, 34, 35, 36, 37, 39	GND	external PU/PD or open + configure internal PU/PD
TMS	18	GND	
Reset	21	open	
P2/XTAL out	31	open	
P2/XTAL in	32	GND	
VDDEXT	45	open	
VBAT_SENSE	48	VS	

28.5 Connection of P0.2 for SWD debug mode

To enter the SWD debug mode, P0.2 needs to be 0 at the rising edge of the reset signal.

P0.2 has an internal pulldown, so it just needs to be ensured that there is no external 1 at P0.2 when the debug mode is entered.

28.6 Connection of TMS

For the debug mode, the TMS pin needs to be 1 at the rising edge of the reset signal. This is controlled by the debugger. The TMS pin has an internal PD.

To avoid the device entering the debug mode unintendedly in the final application, adding an external pull-down additionally is recommended.

28.7 ESD Immunity According to IEC61000-4-2

*Note: Tests for ESD robustness according to IEC61000-4-2 “gun test” (150pF, 330Ω) were performed. The results and test condition are available in a test report. The achieved values for the test are listed in **Table 523** below.*

Table 523 ESD “Gun Test”

Performed Test	Result	Unit	Remarks
ESD at pin LIN, versus GND	≥6	kV	[1)]positive pulse
ESD at pin LIN, versus GND	≤ -6	kV	[1)]negative pulse

Table 523 ESD “Gun Test” (cont’d)

Performed Test	Result	Unit	Remarks
ESD at pin VS, VBAT_SENSE, MONx, HS, versus GND	≥6	kV	1)positive pulse
ESD at pin VS, VBAT_SENSE, MONx, HS, versus GND	≤ -6	kV	1)negative pulse

1) ESD susceptibility “ESD GUN”, tested by external test house (IBEE Zwickau, EMC Test report Nr. 11-01-16), according to "LIN Conformance Test Specification Package for LIN 2.1, October 10th, 2008" and "Hardware Requirements for LIN, CAN and FlexRay Interfaces in Automotive Application – AUDI, BMW, Daimler, Porsche, Volkswagen – Revision 1.3 / 2012"

29 Revision History

Revision History	
Page or Item	**Subjects (major changes since previous revision)**
Rev. 1.0, 2016-06-20	
	Initial revision of User´s Manual

Edition 2016-06-20

Published by
Infineon Technologies AG
81726 Munich, Germany

© 2016 Infineon Technologies AG
All Rights Reserved.

Legal Disclaimer

The information given in this document shall in no event be regarded as a guarantee of conditions or characteristics. With respect to any examples or hints given herein, any typical values stated herein and/or any information regarding the application of the device, Infineon Technologies hereby disclaims any and all warranties and liabilities of any kind, including without limitation, warranties of non-infringement of intellectual property rights of any third party.

Information

For further information on technology, delivery terms and conditions and prices, please contact the nearest Infineon Technologies Office (**www.infineon.com**).

Warnings

Due to technical requirements, components may contain dangerous substances. For information on the types in question, please contact the nearest Infineon Technologies Office.

Infineon Technologies components may be used in life-support devices or systems only with the express written approval of Infineon Technologies, if a failure of such components can reasonably be expected to cause the failure of that life-support device or system or to affect the safety or effectiveness of that device or system. Life support devices or systems are intended to be implanted in the human body or to support and/or maintain and sustain and/or protect human life. If they fail, it is reasonable to assume that the health of the user or other persons may be endangered.