PRODUCT BRIEF

OptiMOS™ 100 V TOLL 10x12

New benchmark for best-in-class on-resistance, power density and efficiency

Infineon Technologies AG (FSE: IFX / OTCQX: IFNNY) expands its automotive MOSFET portfolio with devices combining leading-edge OptiMOS™ 7 100 V technology with the high-power, industry-standard TOLL package.

Infineon's TOLL (PG-HSOF-8) package supports currents up to 350 A in a compact 10 × 12 mm^2 footprint. Combined with OptiMOS™ 7 100 V technology, the TOLL provides low on-resistance and reduced switching losses, enabling high-efficiency, high-power-density automotive designs.

OptiMOS™ 7 technology also provides improved safe operating area (SOA) ruggedness and higher single-avalanche-current capability. A tightly controlled gate-source threshold voltage, $V_{GS(th)}$, supports current sharing in parallel MOSFET configurations well.

The 100 V TOLL MOSFETs are designed and manufactured according to Infineon's stringent quality requirements. The devices undergo extended qualification beyond the requirements of the AEC-Q101 automotive standard.

The 100 V TOLL 10 × 12 mm^2 portfolio includes MOSFETs based on both OptiMOS™ 7 and OptiMOS™ 5 100 V technologies, providing a broad range of performance options. The portfolio spans maximum $R_{DS(on)}$ values from 0.88 mΩ to 3.5 mΩ, featuring a best-in-class 0.88 mΩ device.

Unique features of the OptiMOS™ 5 100 V TOLL MOSFETs are better thermal performance and higher $R_{DS(on)}$ options that are priced lower.

Key features

- Extremely low on-resistance, $R_{DS(on)}$
- Leading edge FOM ($R_{DS(on)}$ x Qg)
- Fast switching times (turn on/off)
- Low package resistance and inductance
- High SOA ruggedness
- Tight threshold voltage, $V_{GS(th)}$, range
- Extended qualification beyond AEC-Q101
- Package is listed with JEDEC

Key benefits

- Extremely low conduction losses
- Superior switching performance
- Higher power density
- Higher efficiency
- Increased design ruggedness
- Well-suited for parallel placement
- Potential for second source supplier
- Could reduce MOSFET part count on BOM

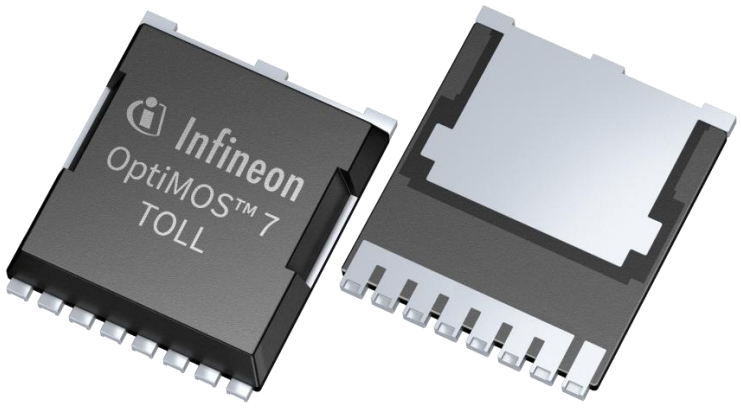

Key applications

- HV-LV DC-DC converters
- Traction inverter (light electric vehicles)
- Battery disconnect switch
- Battery management systems (BMS)
- Power distribution
- Active suspension control
- eTurbo

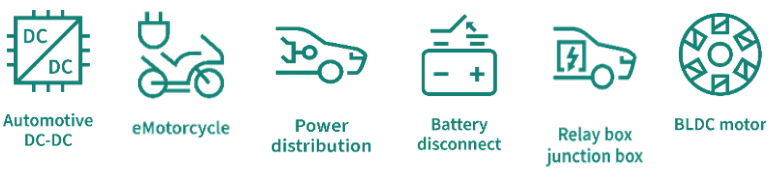

www.infineon.com/automotivemosfet

Example block diagram: Typical HV-LV DC/DC Converter Block Diagram (100 V TOLL used as Secondary Side Switches)

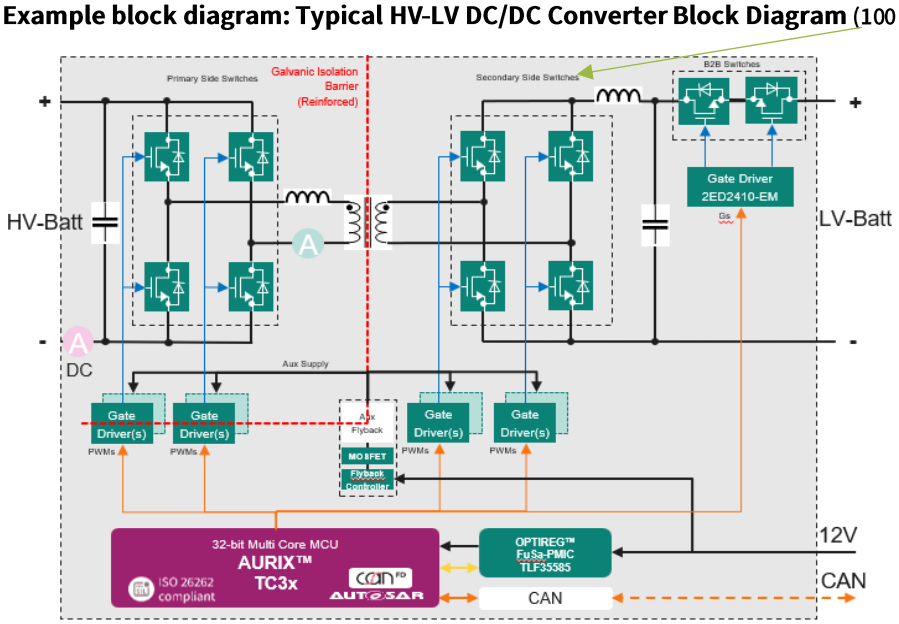

Product Name	Orderable Part Number (OPN)	Ordering Code	V_{DS} [V]	$R_{DS(on)}$ max at 10V [mΩ]	Q_G typ. [nC]	I_D max. at 25°C [A]
IAUTN10S7N009	IAUTN10S7N009ATMA1	SP005992421	100	0.88	187	350
IAUTN10S7N011	IAUTN10S7N011ATMA1	SP006218896	100	1.04	180	350
IAUTN10S7N013	IAUTN10S7N013ATMA1	SP006218900	100	1.26	144	349
IAUT300N10S5N014	IAUT300N10S5N014ATMA1	SP005427384	100	1.4	166	300
IAUT300N10S5N015	IAUT300N10S5N015ATMA1	SP001416130	100	1.5	166	300
IAUT260N10S5N019	IAUT260N10S5N019ATMA1	SP001676336	100	1.9	128	260
IAUT150N10S5N035	IAUT150N10S5N035ATMA1	SP001416126	100	3.5	67	150

Published by
Infineon Technologies AG
Am Campeon 1-15, 85579 Neubiberg
Germany

© 2026 Infineon Technologies AG
All rights reserved.

Public

Version: V01.00_EN
Date: 09/2026

Please note!
This Document is for information purposes only and any information given herein shall in no event be regarded as a warranty, guarantee or description of any functionality, conditions and/or quality of our products or any suitability for a particular purpose. With regard to the technical specifications of our products, we kindly ask you to refer to the relevant product data sheets provided by us. Our customers and their technical departments are required to evaluate the suitability of our products for the intended application.

We reserve the right to change this document and/or the information given herein at any time.

Additional information
For further information on technologies, our products, the application of our products, delivery terms and conditions and/or prices, please contact your nearest Infineon Technologies office (www.infineon.com).

Warnings
Due to technical requirements, our products may contain dangerous substances. For information on the types in question, please contact your nearest Infineon Technologies office.

Except as otherwise explicitly approved by us in a written document signed by authorized representatives of Infineon Technologies, our products may not be used in any life-endangering applications, including but not limited to medical, nuclear, military, life-critical or any other applications where a failure of the product or any consequences of the use thereof can result in personal injury.

Scan QR code and explore offering
www.infineon.com