

Product brief

TLS850F3TUV33

OPTIREG™ linear voltage regulator with ultra-low quiescent current – WATCHDOG & RESET

The OPTIREG™ linear TLS850F3TUV50 is a high performance low drop out fixed output voltage regulator in a PG-TO252-7 package. With an input voltage range of 3 V to 42 V and very low quiescent current of only 26 µA, these regulators are perfectly suitable for automotive systems or other supply systems connected to the battery permanently. The TLS850F3TUV50 provides an output voltage accuracy of ±2% and a maximum output current of 500 mA.

The loop concept combines fast regulation and very good stability while requiring only one small ceramic capacitor of 1 µF at the output. The operating range starts already at an input voltage of only 3 V (extended operating range). This makes the TLS850F3TUV50 also suitable to supply automotive systems that need to operate during cranking condition

The **Reset** supervises the output voltage, including undervoltage reset and delay reset at power-on. An integrated **Watchdog** circuit with adjustable timing monitors the microcontroller's operation. A shared external delay capacitor sets both reset timing and watchdog timing

Internal protection features such as output current limitation and overtemperature shutdown are implemented to protect the device against immediate damage due to failures such as output short circuit to GND, overcurrent and overtemperature.

Key features

- Output voltage 3.3 V ±2%
- Current capability 500 mA
- Input voltage range from 3 V to 42 V
- Stable with 1 µF ceramic output capacitor
- Ultra low current consumption: typically 26 µA
- Very low drop out voltage: typically 300 mV at 250 mA
- Watchdog circuit for monitoring a microprocessor
- Watchdog inhibit
- Output voltage supervision by reset circuit:
- - Programmable delay time
- Output current limitation
- Overtemperature shutdown
- Green Product (RoHS compliant)

TLS850F3TUV33

OPTIREG™ linear voltage regulator with ultra-low quiescent current – WATCHDOG & RESET

Block Diagram

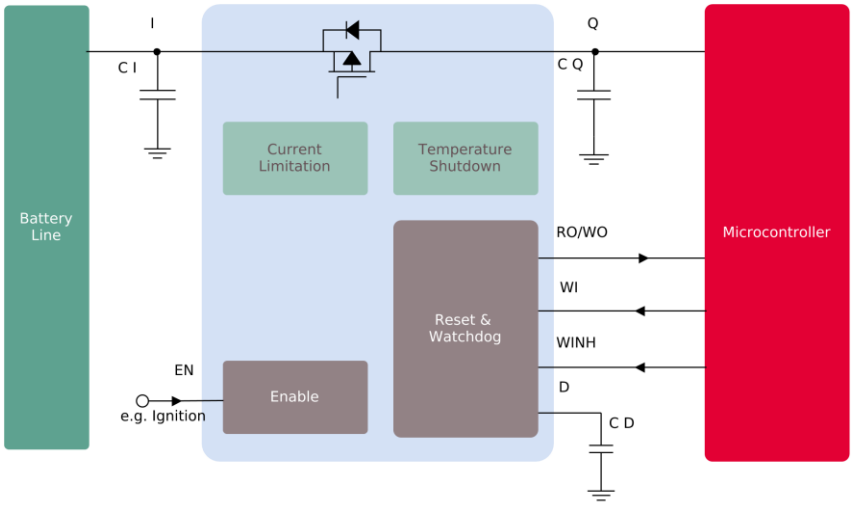

Key benefits

- Smaller input capacitors hence lower input filtering costs
- Suitable for cranking
- PCB space and cost savings
- Power saving for battery

Key applications

- Automotive general ECUs
- Telematics systems
- ADAS cameras and radar systems
- Navigation systems
- Body control modules

Product summary

Sales name	OPN	Package
TLS850F3TUV33	TLS850F3TUV33ATMA1	PG-TO252-7

www.infineon.com

Published by
Infineon Technologies AG
Am Campeon 1-15, 85579 Neubiberg
Germany

© 2023 Infineon Technologies AG.
All rights reserved.

Public

Document number: B000-I0000-V1-X-7600-EU-EC
Date: 04 / 2023

Please note!
This Document is for information purposes only and any information given herein shall in no event be regarded as a warranty, guarantee or description of any functionality, conditions and/or quality of our products or any suitability for a particular purpose. With regard to the technical specifications of our products, we kindly ask you to refer to the relevant product data sheets provided by us. Our customers and their technical departments are required to evaluate the suitability of our products for the intended application.

We reserve the right to change this document and/or the information given herein at any time.

Additional information
For further information on technologies, our products, the application of our products, delivery terms and conditions and/or prices please contact your nearest Infineon Technologies office (www.infineon.com).

Warnings
Due to technical requirements, our products may contain dangerous substances. For information on the types in question, please contact your nearest Infineon Technologies office.

Except as otherwise explicitly approved by us in a written document signed by authorized representatives of Infineon Technologies, our products may not be used in any life-endangering applications, including but not limited to medical, nuclear, military, life-critical or any other applications where a failure of the product or any consequences of the use thereof can result in personal injury.