PRODUCT BRIEF

TLD6099-2ES

Multi-topology, dual-channel DC-DC controller for Adaptive Driving Beam (ADB)

The TLD6099-2ES is a dual-channel, multi-topology DC-DC boost controller. It is designed for automotive LED applications with built-in protection features to enable the development of compact LED drivers. Apart from the standard protection features, the TLD6099-2ES also incorporates output current spike protection to safeguard the LED from potential damage.

The TLD6099-2ES is engineered to independently regulate and protect the output currents generated by its two channels. Each channel is designed to control an additional external NMOS transistor, which is crucial for swiftly discharging the output capacitance. This rapid discharge mechanism is particularly beneficial in reducing the amplitude of current spikes that occur at the output during rapid load changes.

Abrupt load variations are common in automotive lighting systems, especially in the following scenarios:

- High and low beam transition: In vehicle headlamp systems, the TLD6099-2ES enables seamless transitions between high and low beam settings, depending on driving conditions, by preventing abrupt current spikes that can occur during fast load changes.
- Adaptive Driving Beam (ADB) adjustment: ADB technology dynamically adjusts headlight brightness and beam pattern in real-time, striking a balance between optimal driver visibility and minimizing glare for oncoming traffic, in response to changing road lighting conditions.

The TLD6099-2ES supports dynamic operations dictated by the Matrix Manager. By actively discharging the output capacitance with the NMOS transistor, the TLD6099-2ES prevents unwanted current spikes during these rapid adjustments.

The switching frequency can be adjusted from 100 kHz to 500 kHz using an external resistor. The TLD6099-2ES also incorporates a spread spectrum modulator to meet automotive electromagnetic emission requirements. Additionally, it also operates at 2.2 MHz switching frequency, which is a sweet spot in the electromagnetic emission.

The TLD6099-2ES has two dedicated pins for analog and digital dimming. The analog dimming pin can be used to realize binning selection, adjust current, and set thermal foldback by using an NTC.

In summary, the TLD6099-2ES is designed to enhance the performance of automotive lighting systems; it provides a mechanism to effectively manage rapid load variations which occur during headlamp operation.

Key features

- NMOS gate driver for Adaptive Output Discharge (AOD)
- Dual-channel device
- Wide input (up to 58 V) and output voltage range (up to 72 V)
- Switching frequency range from 100 kHz to 500 kHz and 2.2 MHz
- Spread spectrum to optimize EMC behavior
- Analog current adjustment
- Digital dimming input
- Overvoltage, short to ground, open feedback, and overtemperature protection

Key benefits

- LED protection against current spikes
- Ability to supply adaptive driving beam strings
- Possibility to configure a single stage DC-DC architecture
- High efficiency compared to a multistage approach
- Minimized EMI emissions





Application diagram

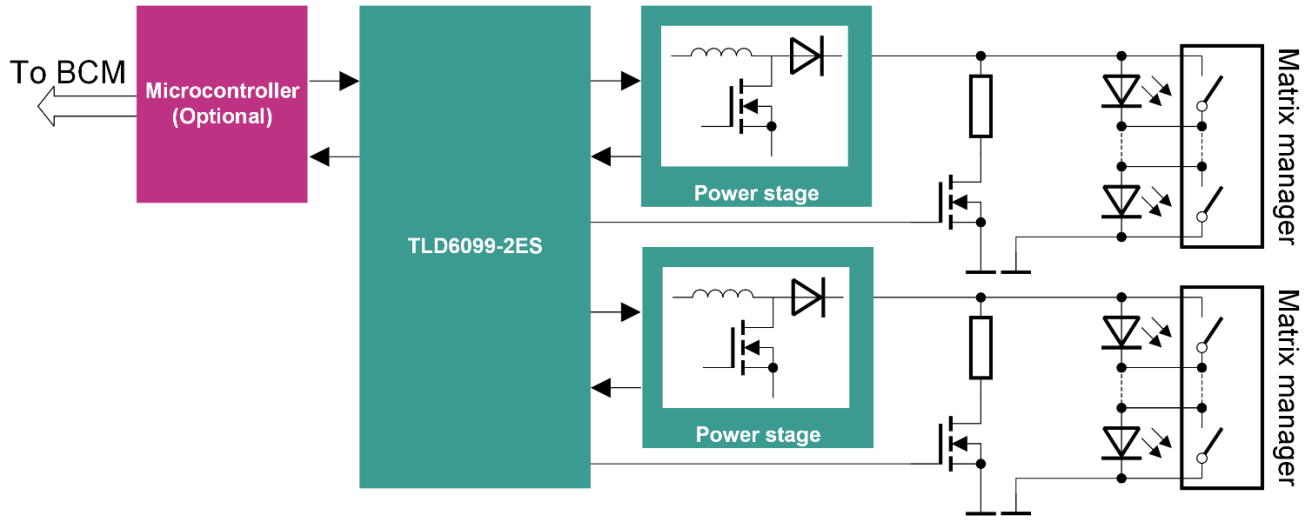

Technical information

Parameters	TLD6099-2ES
I_Q	5 mA
Adaptive Output Discharge	Yes
Open-load detection	Yes
PWM dimming	Yes
Short-circuit protection	Yes
Current accuracy	+/- 3.5%
Topology	Multi-topology DC-DC controller
V_S (min-max)	4.5 V – 58 V
f_{SW} (min-max)	100 kHz – 500 kHz and 2.2 MHz

Published by
Infineon Technologies AG
Am Campeon 1-15, 85579 Neubiberg
Germany

© 2024 Infineon Technologies AG
All rights reserved.

Public

Date: 09/2024

Please note!
This Document is for information purposes only and any information given herein shall in no event be regarded as a warranty, guarantee or description of any functionality, conditions and/or quality of our products or any suitability for a particular purpose. With regard to the technical specifications of our products, we kindly ask you to refer to the relevant product data sheets provided by us. Our customers and their technical departments are required to evaluate the suitability of our products for the intended application.

We reserve the right to change this document and/or the information given herein at any time.

Additional information
For further information on technologies, our products, the application of our products, delivery terms and conditions and/or prices, please contact your nearest Infineon Technologies office (www.infineon.com).

Warnings
Due to technical requirements, our products may contain dangerous substances. For information on the types in question, please contact your nearest Infineon Technologies office.

Except as otherwise explicitly approved by us in a written document signed by authorized representatives of Infineon Technologies, our products may not be used in any life-endangering applications, including but not limited to medical, nuclear, military, life-critical or any other applications where a failure of the product or any consequences of the use thereof can result in personal injury.

Scan QR code and explore offering
www.infineon.com