PRODUCT BRIEF

PSoC™ 4 HVPA-144K (High Voltage Precision Analog)

One-chip solution for IBS/BMS high precision current sensing applications

PSoC™ 4 HVPA series of products, provides a one-chip solution for battery management system integrating high precision analog, high-voltage (12V) operation, LIN PHY and an ARM™ Cortex™ CPU. The device is developed compliant to ISO 26262, meeting all process requirements for ASIL C and hardware architectural metrics for ASIL B. It provides a fully integrated embedded system for monitoring and managing automotive 12 V lead-acid batteries, which is critical for the 12 V power supply of vehicles' electrical systems.

Highly accurate shunt based current sensing for precise SOC/SOH tracking
The PSoC™ 4 HVPA-144K's dual sigma-delta ADCs, together with four digital filter channels, enable accurate measurement of the battery's state-of-charge (SoC) and state-of-health (SoH) by measuring key parameters such as voltage, current, and temperature with an accuracy of up to ±0.1 %. The device features two programmable gain amplifiers (PGAs) with automatic gain control, allowing fully autonomous control of the analog front end without software intervention. The use of shunt-based current sensing for batteries provides a higher accuracy than conventional Hall sensors.

Small footprint with integrated high voltage components
An integrated 12 V LDO (42 V tolerant) allows the device to be supplied directly from the 12 V lead-acid battery without the need for an external power supply. An integrated transceiver allows direct communication with the LIN bus.

Flexible programmable solution with embedded memory
The Arm® Cortex®-M0+ MCU on which the PSoC™ 4 HVPA-144K is based operates at up to 48 MHz with up to 128 KB of code flash, 8 KB of data flash and 8 KB of SRAM, all with ECC. The PSoC™ 4 HVPA-144K also includes digital peripherals such as four timers/counters/PWMs and a serial communication block that can be configured as an I2C/SPI/UART.

Key features

- High-precision analog subsystem enables with two 16-bit delta-sigma ADC and – Programmable Gain Amplifier (PGA) with automatic gain control
- Developed compliant to ISO 26262 meeting ASIL C for process and ASIL B for hardware metrics
- Integrates LIN-PHY transceiver and high voltage LDO (42V tolerant) for direct operation with 12V

Key benefits

- Precise SOC/SOH tracking
- Shunt base current sensing
- Wide input range
- High safety
- Fast time-to-market with flexibility by MCU / software solution
- Data storage by embedded memory
- Fits in a compact small footprint package, smaller PCB area
- Lower power consumption compared to a multi-chip solution

Application example: Shunt base intelligent battery sensor (IBS)

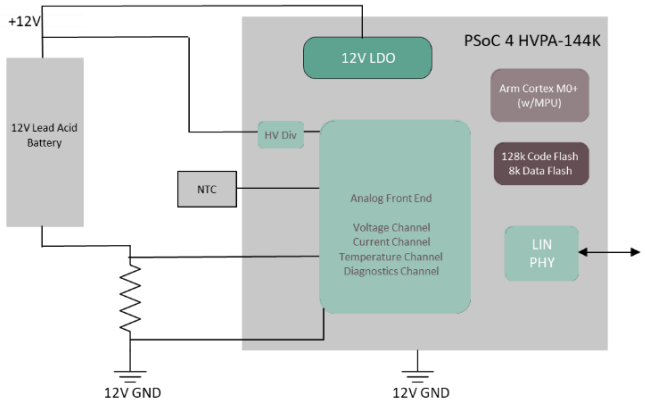



www.infineon.com/psochvpa144k

PSoC™ 4 HVPA-144K Block diagram

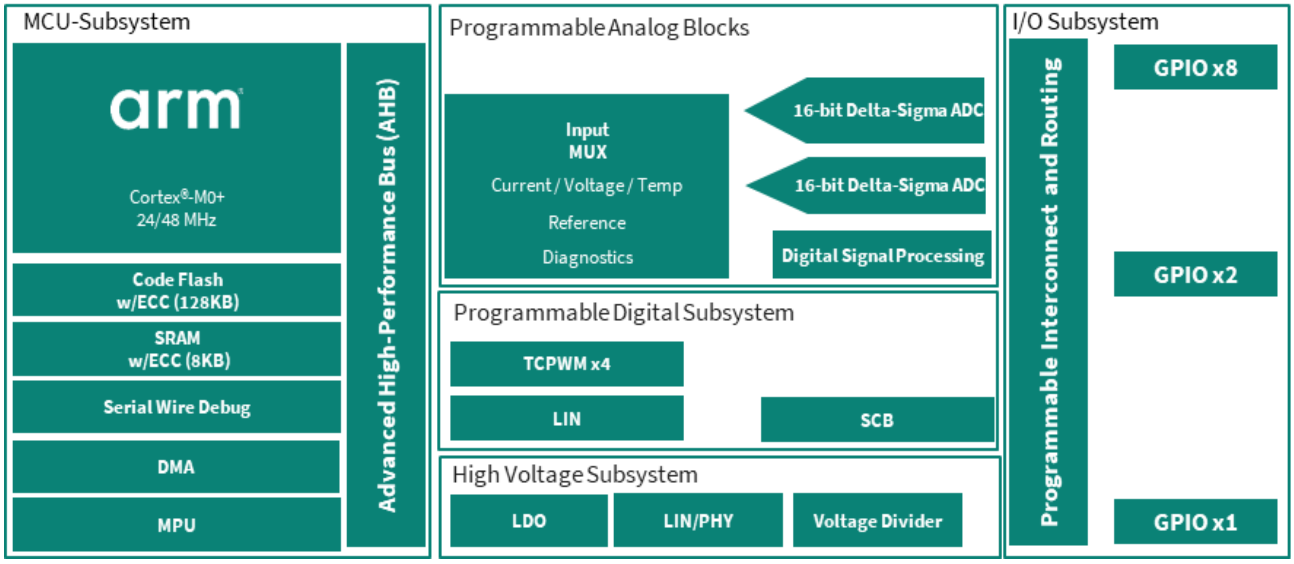

Getting Started and software support

The PSoC™ 4 HVPA offers two options to get started quickly and easily. The low-price Lite Kit (KIT_PSoC4-HVPA-144K_LITE) provides a cost-effective way to begin development, while the Evaluation Kit (CYHVPA-128K-32-001) is available for full-function evaluation.
In terms of software support, the PSoC 4 HVPA is backed by automotive-quality software, including PDL and SafeTlib. Users can start their trial with an evaluation license. Furthermore, it is planned to be supported by ModusToolbox™, which will provide an easier getting started experience at no additional cost.

CYHVPA-128K-32-001



KIT_PSoC4-HVPA-144K_LITE

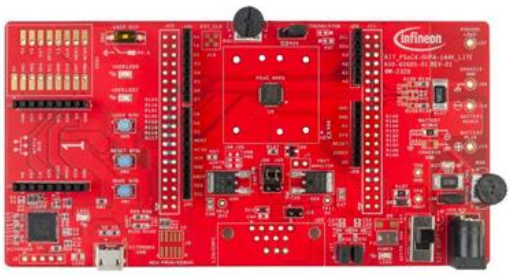

Published by
Infineon Technologies AG
Am Campeon 1-15, 85579 Neubiberg
Germany

© 2024 Infineon Technologies AG
All rights reserved.

Public

Version: V1.0_EN
Date: 08/2024

Scan QR code and explore offering
www.infineon.com/psochvpa144k

Please note!
This Document is for information purposes only and any information given herein shall in no event be regarded as a warranty, guarantee or description of any functionality, conditions and/or quality of our products or any suitability for a particular purpose. With regard to the technical specifications of our products, we kindly ask you to refer to the relevant product data sheets provided by us. Our customers and their technical departments are required to evaluate the suitability of our products for the intended application.

We reserve the right to change this document and/or the information given herein at any time.

Additional information
For further information on technologies, our products, the application of our products, delivery terms and conditions and/or prices, please contact your nearest Infineon Technologies office (www.infineon.com).

Warnings
Due to technical requirements, our products may contain dangerous substances. For information on the types in question, please contact your nearest Infineon Technologies office.

Except as otherwise explicitly approved by us in a written document signed by authorized representatives of Infineon Technologies, our products may not be used in any life-endangering applications, including but not limited to medical, nuclear, military, life-critical or any other applications where a failure of the product or any consequences of the use thereof can result in personal injury.