PRODUCT BRIEF

PROFET™ +2 12V

Smart power high-side switches for automotive zone controller

The PROFET™ +2 12V family of high-side smart power switches (1.4 to 90 mΩ) provides state of the art diagnostics and protection features. Due to the two trends in the automotive power distribution towards battery electric vehicles (BEV) on the one hand and from domain to zonal architectures on the other, different high-side switches are needed to optimally cover the different requirements (for example with and without undervoltage recovery time), like the Infineon PROFET™ +2 12V family.

The family variants ESP and EPL products have a capacitive load switching (CLS) mode implemented. This mode supports cost optimized charging of large capacity loads or power module up to several mF.

The family offers outstanding low current consumption, state of the art current sense accuracy (k_{ILIS}), low cranking voltage capability down to 2.7 V and faster switching/slew rate with no impact on EME. There are slow switching high-side ERP devices available for seat heater application. (ICNIRP1989)

The PROFET™ +2 12V products are offered in TSDSO-14 (2.0 mΩ to 200 mΩ) and TSDSO-24 (1.4 mΩ to 2.0 mΩ) exposed pad package with a pin pitch of 0.65 mm. Thanks to pin to pin compatibility between the packages, high design-in flexibility is granted. Moreover, the product family fulfills AEC-Q100 qualification with load dump requirements up to $V_{DS(CLAMP)_25}$ = 38 V special for 12 V automotive board net.

Key features

- Operating voltage range 2.7–28 V with 3.3 V and 5 V compatible logic input
- Protection: current tripping or limitation, overtemperature, overvoltage, load dump, reverse polarity, short-circuit
- Diagnosis: analog load current sense output (controlled with failure detection)
- Capacitive load switching mode: charges capacitive loads and reduces current peaks during switch-ON of capacitors
- With/without under voltage recovery time
- Open load in OFF
- AEC-Q100 qualification
- PRO-SIL™ ISO 26262-ready

Feature overview	PROFET™ +2 12V family								
	BTS7xxx-yzzz								BTG7xxx-yzzz
	EPA	EPG	EPC	EPR	EPP	ESP	EPZ	EPL	EPL
Channels	1/2/4	2	2	1	1	1	1/2	2	1/2
Current range > 10 A				✓	✓	✓	✓		
Current range ≤ 11 A	✓	✓	✓				✓	✓	✓
Slow slew rate (reduced EME)				✓					✓
Capacitive Load Switching (CLS) mode						✓		✓	✓
Low cranking support (2.7 V)			✓					✓	✓
Grade 0 (T_J up to 175°C)							✓		
Intelligent restart	✓	✓	✓				(✓)	✓	✓
Intelligent latch				✓	✓	✓	(✓)		✓
Current tripping	✓	✓	✓	✓	✓	✓	✓		
Current limitation								✓	✓
No undervoltage recovery time		✓		✓		✓		✓	

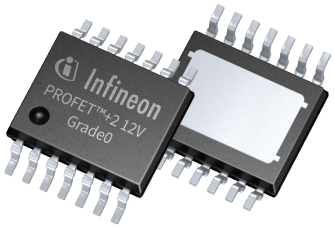

PRO SIL ISO 26262 ready

Seat heating

Pedestrian protection

Power distribution

www.infineon.com/profet+2

Power distribution and the zone controller
Wire harness reduction, relay and fuse replacement by high-side switches

Supply
– OPTIREG™ PMIC
Communication
– CAN & LIN transceivers
Supply & communication
– OPTIREG™ SBC (System Basis Chip)
Microcontroller
– TRAVEO™ T2G and/or AURIX™ TC3x
NOR Flash
– SEMPER™ families

Single & Multichannel smart high-side switch
– Power PROFET™,
PROFET™ +2 12V, SPOC™ +2,
PROFET™ +2 BTG70xx-y -EPL types,
PROFET™ Wire Guard
Single half bridges and multi MOSFET driver
– MOTIX™ Families
High-side gate driver
– EiceDRIVER™ APD
MOSFET
– 40 V N-channel automotive MOSFET

Zone controller block diagram

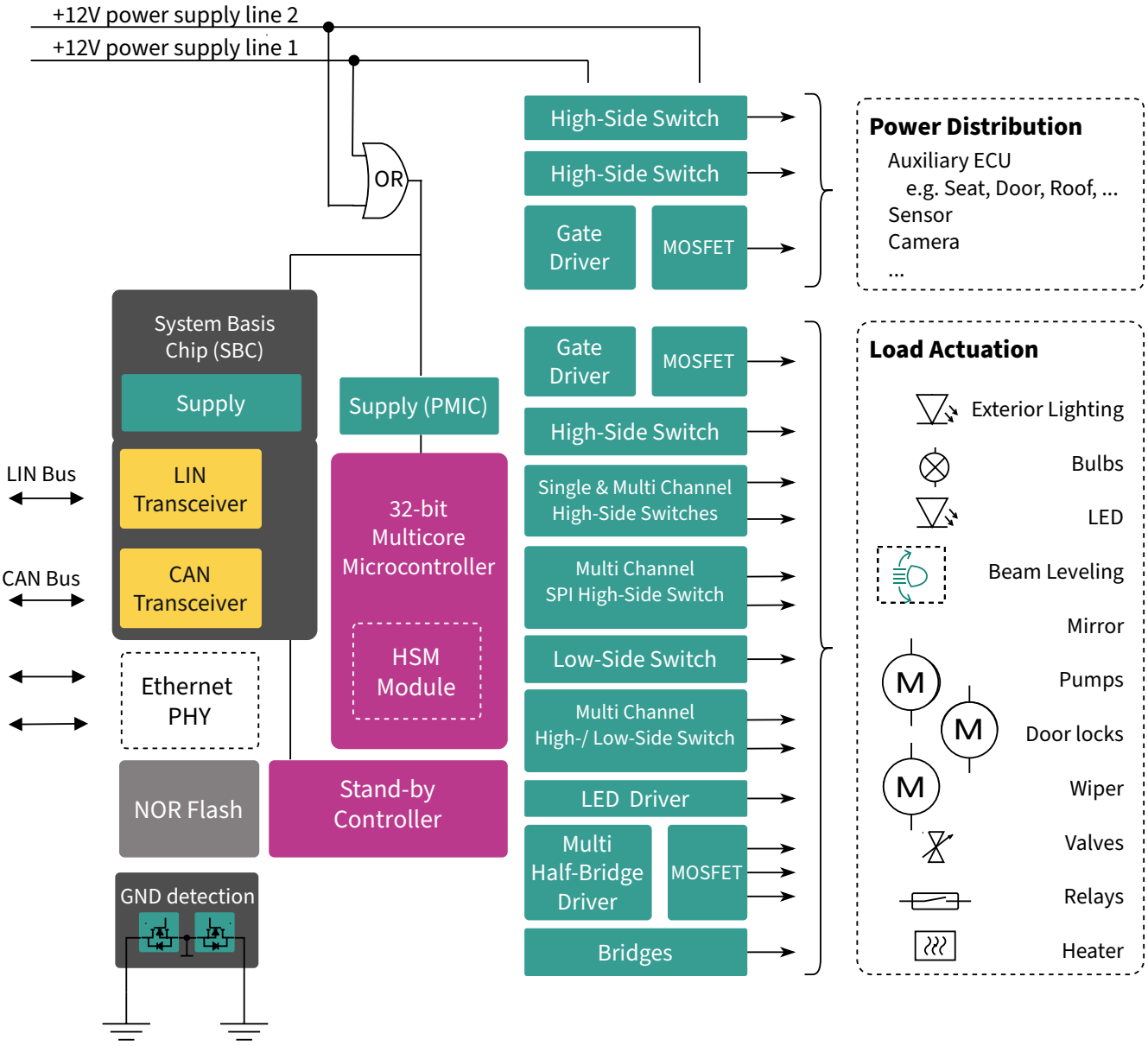

Product table

Product	$R_{DS(on)}$ @ T_j = 25°C [mΩ]	I_L nominal current @ T_A = 85°C [A]	EAS [mJ]	Operating voltage range [V]	I_L short circuit current [A]	Channels	Over-current protection	Under-voltage recovery time	Restart strategy	t_{on} turn ON time max [µs]	Operating tempera-ture max [°C]	Reverse ON	Package
BTS70012-1ESP[1]	1.4	31.3	525 @ 62.6	3.1 …28	209	1	trip	No	latch	210	150	•	PG-TSDSO-24
BTS70015-1ESP[1]	1.7	27.6	420 @ 55.2	3.1 … 28	171	1	trip	No	latch	210	150	•	PG-TSDSO-24
BTS70020-1ESP[1]	2.3	23.2	325 @ 46.4	3.1 … 28	141	1	trip	No	latch	210	150	•	PG-TSDSO-24
BTS7002-1EPP	2.6	21	315 @ 42	3.1 … 28	133	1	trip	Yes	latch	210	150	•	PG-TSDSO-14
BTS7004-1EPP	4.4	15	150 @ 30	3.1 … 28	117.5	1	trip	Yes	latch	210	150	•	PG-TSDSO-14
BTS7004-1EPR[1]	4.4	15	150 @ 30	3.1 … 28	117.5	1	trip	No	restart[3]	1800	150	•	PG-TSDSO-14
BTS7004-1EPZ	4.4	15	150 @ 30	3.1 … 28	117.5	1	trip	Yes	restart[3]	210	175	•	PG-TSDSO-14
BTS7006-1EPP	6.6	12.5	95 @ 25	3.1 … 28	89.5	1	trip	Yes	latch	210	150	•	PG-TSDSO-14
BTS7006-1EPZ	6.6	12.5	95 @ 25	3.1 … 28	89.5	1	trip	Yes	restart[3]	210	175	•	PG-TSDSO-14
BTS7008-1EPA	9.0	10	65 @ 20	3.1 … 28	88	1	trip	Yes	restart[3]	110	150	•	PG-TSDSO-14
BTS7008-1EPP	8.8	11	70 @ 20	3.1 … 28	77.5	1	trip	Yes	latch	210	150	•	PG-TSDSO-14
BTS7008-1EPR[2]	8.8	11	65 @ 20	3.1 … 28	77.5	1	trip	No	restart[3]	1800	150	•	PG-TSDSO-14
BTS7008-1EPZ	9.0	10	65 @ 20	3.1 … 28	88	1	trip	Yes	restart[3]	110	175	•	PG-TSDSO-14
BTS7008-2EPA	9.0	7.5	75 @ 15	3.1 … 28	88	2	trip	Yes	restart[3]	110	150	•	PG-TSDSO-14
BTS7008-2EPG	9.0	7.5	75 @ 15	3.1 … 28	88	2	trip	No	restart[3]	110	150	•	PG-TSDSO-14
BTS7008-2EPZ	9.0	7.5	75 @ 15	3.1 … 28	88	2	trip	Yes	restart[3]	110	175	•	PG-TSDSO-14
BTS7010-1EPA	9.5	9	55 @ 18	3.1 … 28	77	1	trip	Yes	restart[3]	110	150	•	PG-TSDSO-14
BTS7010-2EPA	9.5	6.5	55 @ 13	3.1 … 28	77	2	trip	Yes	restart[3]	110	150	•	PG-TSDSO-14
BTS7012-1EPA	11.5	8.5	50 @ 17	3.1 … 28	73	1	trip	Yes	restart[3]	110	150	•	PG-TSDSO-14
BTS7012-2EPA	11.5	6	42 @ 12	3.1 … 28	73	2	trip	Yes	restart[3]	110	150	•	PG-TSDSO-14
BTS7012-2EPG	11.5	6	42 @ 12	3.1 … 28	73	2	trip	No	restart[3]	110	150	•	PG-TSDSO-14
BTS7020-2EPA	12.7	5	42 @ 10	3.1 … 28	71	2	trip	Yes	restart[3]	110	150	•	PG-TSDSO-14
BTS7030-2EPA	13.5	4.5	38 @ 9	3.1 … 28	60	2	trip	Yes	restart[3]	110	150	•	PG-TSDSO-14
BTS7030-2EPG	13.5	4.5	38 @ 9	3.1 … 28	60	2	trip	Yes	restart[3]	110	150	•	PG-TSDSO-14
BTS7040-1EPA	19.0	4.5	30 @ 9	3.1 … 28	46	1	trip	Yes	restart[3]	110	150	•	PG-TSDSO-14
BTS7040-1EPZ	19.0	4.5	30 @ 9	3.1 … 28	46	1	trip	Yes	restart[3]	110	175	•	PG-TSDSO-14
BTS7040-2EPA	19.0	3.5	36 @ 7	3.1 … 28	46	2	trip	Yes	restart[3]	110	150	•	PG-TSDSO-14
BTS7040-2EPG	19.0	3.5	36 @ 7	3.1 … 28	46	2	trip	No	restart[3]	110	150	•	PG-TSDSO-14
BTS7050-2EPL[1]	50.0	3	12 @ 6	3.1 … 28	11.5	2	limitation	No	restart[3]	210	150		PG-TSDSO-14
BTS7080-2EPA	20.9	3	36 @ 6	3.1 … 28	36	2	trip	Yes	restart[3]	110	150	•	PG-TSDSO-14
BTS7080-2EPZ	20.9	3	36 @ 6	3.1 … 28	36	2	trip	Yes	restart[3]	110	175	•	PG-TSDSO-14
BTS7090-2EPL[1]	90.0	2	6,5 @ 4	3.1 … 28	3.7	2	limitation	No	restart[3]	210	150		PG-TSDSO-14
BTS7120-2EPA	61.0	2	13,5 @ 4	3.1 … 28	18.2	2	trip	Yes	restart[3]	110	150		PG-TSDSO-14
BTS7120-2EPG	61.0	2	13.5 @ 4	3.1 … 28	18.2	2	trip	No	restart[3]	110	150		PG-TSDSO-14
BTS7200-2EPA	66.5	1.2	13.5 @ 4	3.1 … 28	10	2	trip	Yes	restart[3]	110	150		PG-TSDSO-14
BTS7200-2EPC	66.5	1.2	13.5 @ 4	2.7 … 28	10	2	trip	Yes	restart[3]	110	150		PG-TSDSO-14
BTS7200-4EPA	66.5	1	13.5 @ 2.4	3.1 … 28	10	4	trip	Yes	restart[3]	110	150		PG-TSDSO-14

1) New
2) Coming soon
3) Dedicated restart retries, afterwards channel latch

Application diagram of PROFET™ +2 12V family

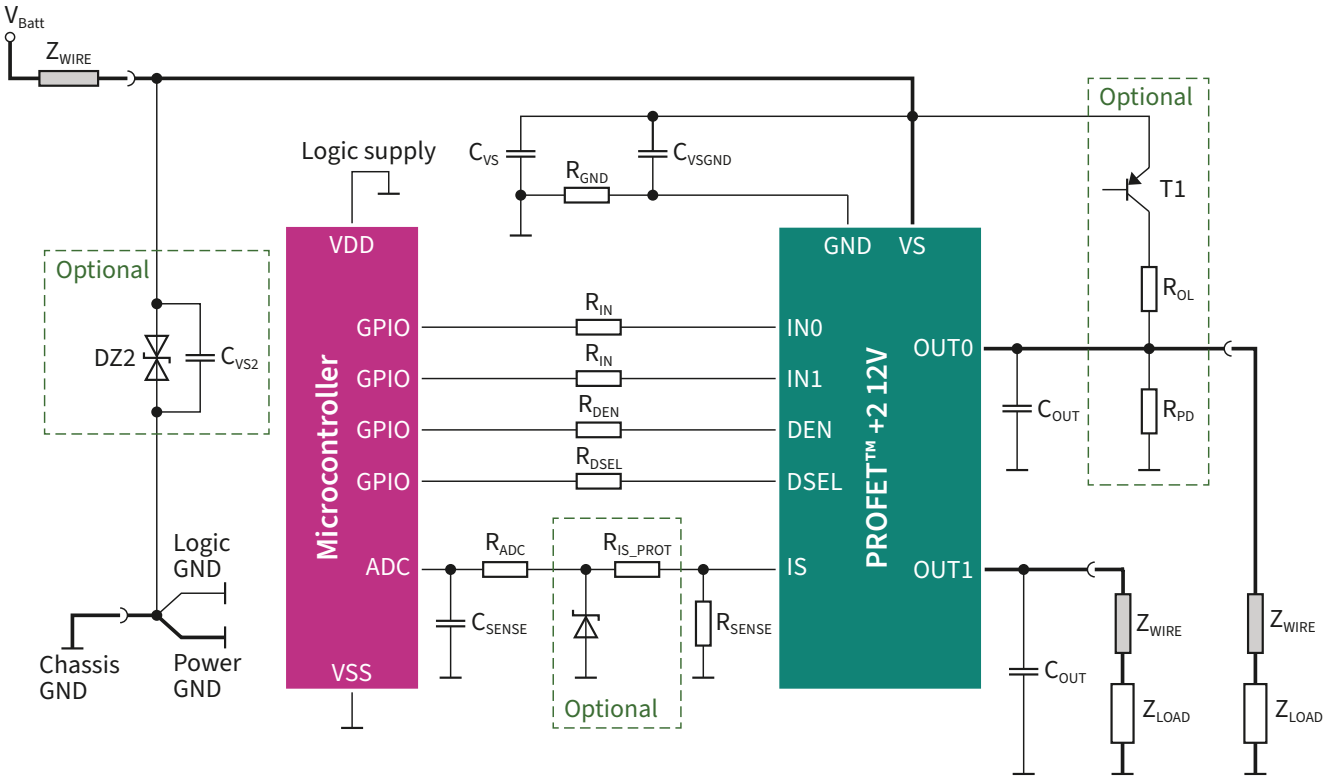

Support material click on the Icon

Evaluation board

Simulation models

Simulation tools

Development tools

Published by
Infineon Technologies AG
Am Campeon 1-15, 85579 Neubiberg
Germany

© 2025 Infineon Technologies AG.
All rights reserved.

Public

Date: 10/2025

Scan QR code and explore offering
www.infineon.com

Please note!
This Document is for information purposes only and any information given herein shall in no event be regarded as a warranty, guarantee or description of any functionality, conditions and/or quality of our products or any suitability for a particular purpose. With regard to the technical specifications of our products, we kindly ask you to refer to the relevant product data sheets provided by us. Our customers and their technical departments are required to evaluate the suitability of our products for the intended application.

We reserve the right to change this document and/or the information given herein at any time.

Additional information
For further information on technologies, our products, the application of our products, delivery terms and conditions and/or prices, please contact your nearest Infineon Technologies office (www.infineon.com).

Warnings
Due to technical requirements, our products may contain dangerous substances. For information on the types in question, please contact your nearest Infineon Technologies office.

Except as otherwise explicitly approved by us in a written document signed by authorized representatives of Infineon Technologies, our products may not be used in any life-endangering applications, including but not limited to medical, nuclear, military, life-critical or any other applications where a failure of the product or any consequences of the use thereof can result in personal injury.