PRODUCT BRIEF

OptiMOS™ 5 80 V and 100 V mTOLG package MOSFETs

Latest package development offers high power density

Infineon introduces OptiMOS™ 5 80 V and 100 V automotive MOSFETs in its new mTOLG 8x8mm² surface mount package.

These MOSFETs are designed specifically for the high performance, high quality and robustness needed for demanding automotive applications. mTOLG package MOSFETs are recommended for aluminum (Al) based IMS substrates because of their enhanced temperature cycling (TCoB) performance.

Key features

- Gullwing shaped leads
- Compatible with other 8x8mm² packages
- Leading edge $R_{DS(on)}$
- Fast switching times (turn on/off)
- Extended qualification beyond AEC-Q101

The mTOLG (PG-HSOG-4) package features gullwing-shaped leads. These leads handle mechanical stress well during thermal cycling. This is especially beneficial to customers using aluminum-based IMS boards which bend more as temperature changes. The mTOLG package also uses copper clip interconnect technology, which brings advantages for thermal performance, continuous current capability, on-resistance and package inductance. The leads of the mTOLG package are also compatible with automatic optical inspection (AOI) after soldering.

The OptiMOS™ 5 80 V and OptiMOS™ 5 100 V front-end technologies, coupled with the package features, bring market leading on-resistance. In fact, Infineon offers best-in-class $R_{DS(on)}$ performance, in a 8x8mm² gullwing package, in both the 80 V and the 100 V category. The benefit of the low $R_{DS(on)}$ for customers is minimized conduction losses.

The JEDEC-listed mTOLG package is compatible with other 8x8 mm² gullwing package MOSFETs. This gives customers the option to dual source their automotive MOSFETs.

With the power density offered by these mTOLG MOSFETs, customers benefit from space savings, and potential cost savings if the PCB can be made smaller.

- The mTOLG uses 57% less area than a D2PAK, yet has significantly lower $R_{DS(on)}$ and can handle more current.
- The OptiMOS™ 5 100 V mTOLG uses the same amount of PCB area but has 76 percent better $R_{DS(on)}$ than the best OptiMOS™ T2 100 V DPAK and can handle 140% higher current.

Key benefits

- Enhanced temperature cycling results
- Recommended for metal substrate PCBs
- Minimized conduction losses
- Excellent switching performance
- High power density
- Option to use second source of 8x8mm²

Key applications for these products in 12 V and 48 V automotive systems are DC-DC converters (HV/48 V, 48 V/12 V, HV/24 V), 48 V power distribution, traction inverters for light electric two/three wheel vehicles, and 48 V motor control i.e. e-Turbocharger, fans, pumps and starter-generators for MHEVs.

Infineon offers a resilient supply chain for these products; based by in-house production, 300mm front-end process, etc. Infineon has superior quality and reliability. This is reflected in our rigorous manufacturing processes, stringent testing protocols beyond the AEC-Q101 automotive standard and continued investment in research and development.



www.infineon.com/automotivemosfet

PRODUCT BRIEF

Example automotive HV/LV DC-DC block diagram

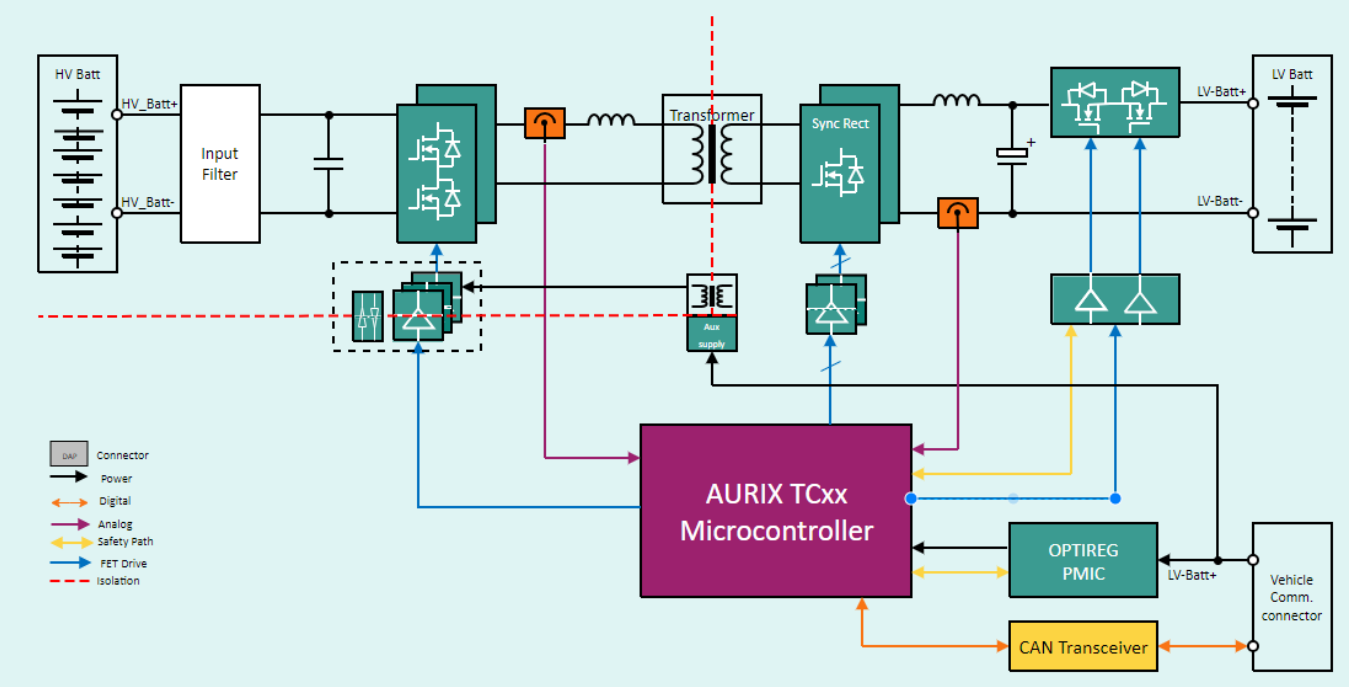

OptiMOS™ 5 100 V mTOLG MOSFETs are used here on the secondary side for synchronous rectification.

Product Table

Product Name	Orderable Part Number (OPN)	Ordering Code	V_{DS} [V]	$R_{DS(on)}$ max at V_{GS} 10V [mΩ]	Q_G typ. [nC]	R_{thJC} max. [K/W]	FOM [mΩ*nC]	I_D max. at 25°C [A]
IAUMN08S5N012G	IAUMN08S5N012GAUMA1	SP006044709	80	1.2	149	0.46	178.8	300
IAUMN08S5N013G	IAUMN08S5N013GAUMA1	SP006044711	80	1.3	138	0.49	179.4	250
IAUMN10S5N016G	IAUMN10S5N016GAUMA1	SP006044713	100	1.6	142	0.46	227.2	220
IAUMN10S5N017G	IAUMN10S5N017GAUMA1	SP006044715	100	1.7	131	0.49	222.7	200

Published by
Infineon Technologies AG
Am Campeon 1-15, 85579 Neubiberg
Germany

© 2024 Infineon Technologies AG
All rights reserved.

Public

Version: V1.0_EN
Date: 09/2024

Please note!
This Document is for information purposes only and any information given herein shall in no event be regarded as a warranty, guarantee or description of any functionality, conditions and/or quality of our products or any suitability for a particular purpose. With regard to the technical specifications of our products, we kindly ask you to refer to the relevant product data sheets provided by us. Our customers and their technical departments are required to evaluate the suitability of our products for the intended application.

We reserve the right to change this document and/or the information given herein at any time.

Additional information
For further information on technologies, our products, the application of our products, delivery terms and conditions and/or prices, please contact your nearest Infineon Technologies office (www.infineon.com).

Warnings
Due to technical requirements, our products may contain dangerous substances. For information on the types in question, please contact your nearest Infineon Technologies office.

Except as otherwise explicitly approved by us in a written document signed by authorized representatives of Infineon Technologies, our products may not be used in any life-endangering applications, including but not limited to medical, nuclear, military, life-critical or any other applications where a failure of the product or any consequences of the use thereof can result in personal injury.

Scan QR code and explore offering
www.infineon.com