PRODUCT BRIEF

OptiMOS™ 7 80 V SSO8 Automotive MOSFETs

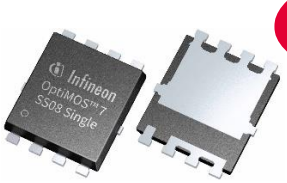

The new benchmark for lowest on-resistance

Infineon introduces a portfolio of MOSFETs in our next, leading edge, power semiconductor technology; OptiMOS™ 7 80 V. These products are offered in a versatile, robust, high current SSO8 5x6mm^2 SMD package.

These MOSFETs are designed specifically for the high performance, high quality and robustness needed for demanding automotive applications.

Key features

- Low on-resistance, $R_{DS(on)}$
- Industry's best on-resistance, $R_{DS(on)}$
- Fast switching times (turn on/off)
- Leading edge FOM ($R_{DS(on)}$ x Q_g)
- Low package resistance and inductance
- High avalanche current capability
- Tight threshold voltage, $V_{GS(th)}$, range
- Drain current improved 75 % over prior
- Extended qualification beyond AEC-Q101

An advantage of OptiMOS™ 7 80 V technology is significantly reduced on-resistance, $R_{DS(on)}$. In fact Infineon's best 80 V SSO8 $R_{DS(on)}$ was improved 58 % from the previous generation, down to 1.3 mΩ maximum. This is now the industry's best-in-class product! The benefit of the lower on-resistance is reduced conduction losses.

Another advantage of OptiMOS™ 7 80 V technology is improved switching performance. The benefits are reduced switching losses and faster switching times. So OptiMOS™ 7 80 V SSO8 MOSFETs are great fits for motor drive and power conversion circuit applications. The reduced switching losses, coupled with the reduced conduction losses, bring the benefit of high energy efficiency.

Infineon's SSO8 (PG-TDSON-8) 5x6 mm^2 package MOSFETs has an improved continuous drain current of up to 175 A. The higher current capability and the high energy efficiency of OptiMOS™ 7 80 V SSO8 MOSFETs mean customers enjoy higher power density. Infineon's SSO8 package has a unique feature. The fused source pins improve solder joint reliability and lower current density into the source, reducing the risk of hot spots. This JEDEC-listed package is pin-to-pin and footprint compatible to other 5x6 mm^2 packages.

OptiMOS™ 7 80 V technology is designed to be more rugged with our highest single-avalanche capability yet in a trench MOSFET.

Another advantage of the new technology is a narrower threshold voltage, $V_{GS(th)}$, range. This makes OptiMOS™ 7 80 V SSO8 products quite well-suited for parallel MOSFET operation.

Key benefits

- Minimized conduction losses
- Superior switching performance
- High power efficiency
- Highest power density in 5x6mm package
- Increased design ruggedness
- Well-suited for parallel placement
- High quality for Automotive applications

Infineon offers a broad portfolio of 80V SSO8 package automotive-qualified MOSFETs. Customers can choose from many options to select the best product for their needs.

Key applications for these products in automotive systems are DC-DC converters (HV/48 V, 48 V/12 V, HV/24 V), 48 V motor control (i.e. EPS, pumps, fans, and braking), LED lighting and 48 V power distribution. Commercial and Agricultural Vehicles are others.

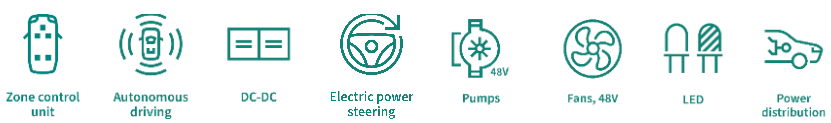

www.infineon.com/automotivemosfet

Example: automotive zonal 48 V to 12 V DC-DC converter block diagram

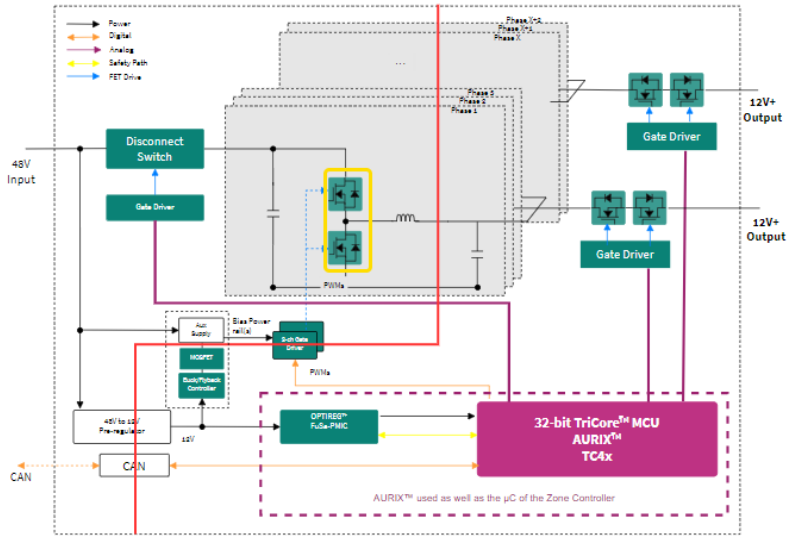

OptiMOS™ 7 80 V SSO8 MOSFETs are used here on for the buck switch and the 48 V input disconnect switch.

Product Table

Product Name	Orderable Part Number (OPN)	Ordering Code	V_{DS} [V]	$R_{DS(on)}$ max at V_{GS} 10V [mΩ]	Q_G typ. [nC]	R_{thJC} max. [K/W]	FOM [mΩ*nC]	I_D max. at 25°C [A]
IAUCN08S7L013	IAUCN08S7L013ATMA1	SP006059915	80	1.26	120	0.69	151.2	175
IAUCN08S7N013	IAUCN08S7N013ATMA1	SP005402887	80	1.3	89	0.69	116	175
IAUCN08S7L018	IAUCN08S7L018ATMA1	SP006059903	80	1.8	79.9	0.89	143.8	175
IAUCN08S7N019	IAUCN08S7N019ATMA1	SP005923840	80	1.9	63	0.89	120	175
IAUCN08S7N024	IAUCN08S7N024ATMA1	SP005923836	80	2.4	51.5	1.0	124	150
IAUCN08S7L024	IAUCN08S7L024ATMA1	SP006059899	80	2.4	65.2	1.01	156.5	150
IAUCN08S7L033	IAUCN08S7L033ATMA1	SP006059889	80	3.3	44.3	1.3	146.19	120
IAUCN08S7N034	IAUCN08S7N034ATMA1	SP005923832	80	3.4	35.2	1.3	120	120
IAUCN08S7L110	IAUCN08S7L110ATMA1	SP005402870	80	11.0	14.8	2.6	163	40

Published by
Infineon Technologies AG
Am Campeon 1-15, 85579 Neubiberg
Germany

© 2024 Infineon Technologies AG
All rights reserved.

Public

Version: v03_00
Date: 06/2025

Please note!
This Document is for information purposes only and any information given herein shall in no event be regarded as a warranty, guarantee or description of any functionality, conditions and/or quality of our products or any suitability for a particular purpose. With regard to the technical specifications of our products, we kindly ask you to refer to the relevant product data sheets provided by us. Our customers and their technical departments are required to evaluate the suitability of our products for the intended application.

We reserve the right to change this document and/or the information given herein at any time.

Additional information
For further information on technologies, our products, the application of our products, delivery terms and conditions and/or prices, please contact your nearest Infineon Technologies office (www.infineon.com).

Warnings
Due to technical requirements, our products may contain dangerous substances. For information on the types in question, please contact your nearest Infineon Technologies office.

Except as otherwise explicitly approved by us in a written document signed by authorized representatives of Infineon Technologies, our products may not be used in any life-endangering applications, including but not limited to medical, nuclear, military, life-critical or any other applications where a failure of the product or any consequences of the use thereof can result in personal injury.

Scan QR code and explore offering
www.infineon.com