PRODUCT BRIEF

OptiMOS™ 5 100 V in Dual SSO8

The next step forward in 100 V MOSFET power density

Infineon introduces its new generation of dual 100 V MOSFETs. These OptiMOS™ 5 100 V automotive MOSFETs are offered in our newly enhanced, dual SSO8 5x6mm² surface mount package.

They feature two independent MOSFETs integrated in one package for PCB **area savings and higher power density**. They are designed specifically for the high performance, high quality and robustness needed for demanding automotive applications.

Key features

- $R_{DS(on)}$ reduced > 50% from prior best
- Industry's best $R_{DS(on)}$
- 60 A current rating; +200% from prior
- Fast switching times (turn on/off)
- Dual; two MOSFETs in one package
- Extended qualification beyond AEC-Q101

The dual SSO8 (PG-TDSON-8) package was enhanced by use of copper clip interconnect technology. This **improves thermal performance**. It also improves the continuous current rating by 200 percent over the prior generation; from 20 A to 60 A max. in the lowest on-resistance products.

The upgrade to OptiMOS™ 5 100 V front-end technology, coupled with the package enhancements, greatly improves on-resistance. In fact, $R_{DS(on)}$ is reduced 57 percent from the prior generation's best product. Infineon now has the best-in-class on-resistance product on the market at 9.4mΩ max. per channel. The benefit for customers is minimized conduction losses.

OptiMOS™ 5 technology also brings big improvements in switching performance as compared to our prior generation of 100 V dual SSO8 MOSFETs which employed OptiMOS™ T2 technology. Q_g, C_{iss} and C_{oss} parameters are all improved.

By integrating two MOSFETs into one package, customers benefit from space savings, reduced manufacturing time for assembly and test, and potential cost savings if the PCB can be made smaller. The dual SSO8 package, which has a PCB footprint area of 33mm², consumes less PCB area than:

- a pair of DPAK MOSFETs (74 percent less area)
- a pair of single SSO8 MOSFETs (50 percent less area)

Key benefits

- Minimized conduction losses
- Superior switching performance
- High power density in 5x6mm package
- Integration - two MOSFETs in a package; less SMD assembly time
- PCB layout flexibility

Key applications for these products in 12V and 48V automotive systems are in-vehicle wireless charging, LED exterior lighting, engine management direct and multi-port injection, transmission control and low power 48V motor control i.e. fans, pumps, braking.

Infineon offers a resilient supply chain for these products; based by in-house production, 300mm front-end process, etc. Infineon has superior quality and reliability. This is reflected in our rigorous manufacturing processes, stringent testing protocols beyond the AEC-Q101 automotive standard and continued investment in research and development.





www.infineon.com/automotivemosfet

Example automotive LED headlamp block diagram

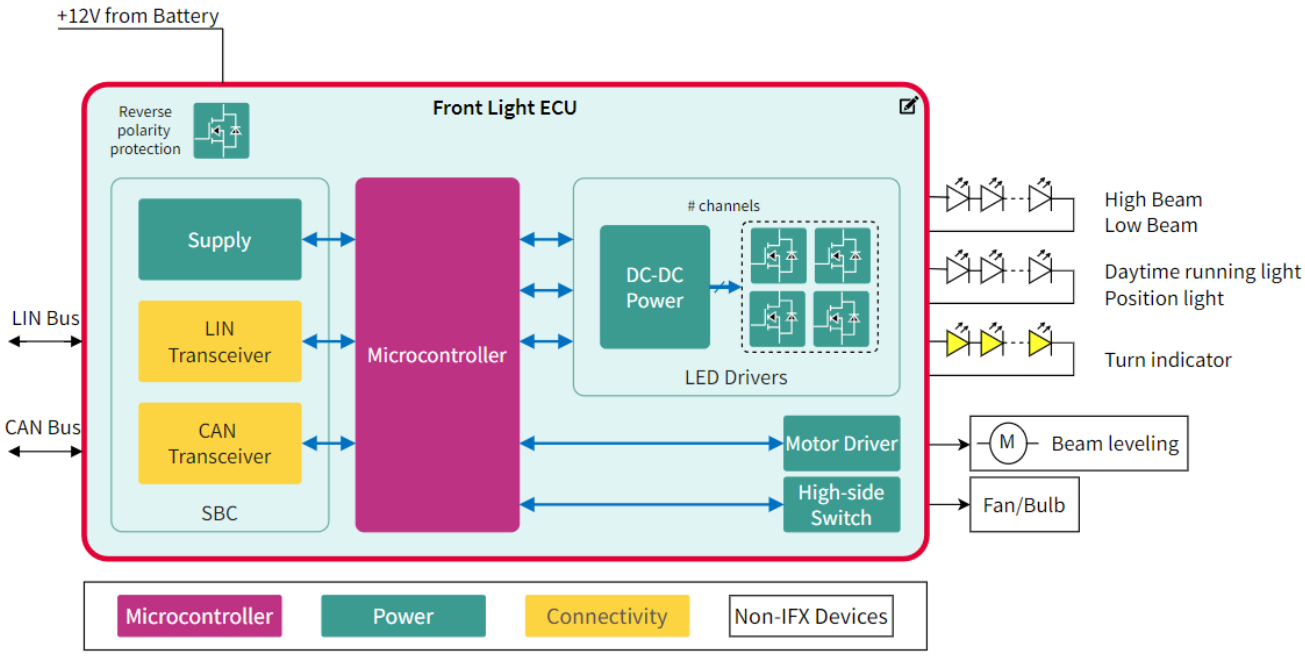

The OptiMOS™ 5 100 V dual SSO8 MOSFETs are used in the 'LED Drivers' block together with the DCDC converter to boost voltage to drive the LED chain(s).

Product Table

Product Name	Orderable Part Number (OPN)	Ordering Code	V_{DS} [V]	$R_{DS(on)}$ max at V_{GS} 10V [mΩ]	Q_G typ. [nC]	R_{thJC} max. [K/W]	FOM [mΩ*nC]	I_D max. at 25°C [A]
IAUCN10S5L094D	IAUCN10S5L094DATMA1	SP005728249	100	9.4	23	1.6	216.2	60
IAUCN10S5L280D	IAUCN10S5L280DATMA1	SP005728250	100	28.0	7.6	4	212.8	20

Published by
Infineon Technologies AG
Am Campeon 1-15, 85579 Neubiberg
Germany

© 2024 Infineon Technologies AG
All rights reserved.

Public

Version: V1.0_EN
Date: 09/2024

Scan QR code and explore offering
www.infineon.com

Please note!
This Document is for information purposes only and any information given herein shall in no event be regarded as a warranty, guarantee or description of any functionality, conditions and/or quality of our products or any suitability for a particular purpose. With regard to the technical specifications of our products, we kindly ask you to refer to the relevant product data sheets provided by us. Our customers and their technical departments are required to evaluate the suitability of our products for the intended application.

We reserve the right to change this document and/or the information given herein at any time.

Additional information
For further information on technologies, our products, the application of our products, delivery terms and conditions and/or prices, please contact your nearest Infineon Technologies office (www.infineon.com).

Warnings
Due to technical requirements, our products may contain dangerous substances. For information on the types in question, please contact your nearest Infineon Technologies office.

Except as otherwise explicitly approved by us in a written document signed by authorized representatives of Infineon Technologies, our products may not be used in any life-endangering applications, including but not limited to medical, nuclear, military, life-critical or any other applications where a failure of the product or any consequences of the use thereof can result in personal injury.