PRODUCT BRIEF

BRIGHTLANE™ Q3244 automotive 802.3ch compliant 10GBase-T1 PHY

2.5G/5G/10GBase-T1 IEEE 802.3ch compliant automotive Ethernet PHY

The BRIGHTLANE™ Q3244 device is a single-pair Ethernet physical layer transceiver (PHY) that supports operation over Shielded Twisted Pair (STP). The transceiver implements the Ethernet physical layer portion of 2.5G/5G/10GBASE-T1 as defined by the IEEE 802.3ch standard.

The BRIGHTLANE™ Q3244 has integrated MACsec that secures against the Layer 2 In-Vehicle Networking security threats. MACsec secures data exchange on a hop-by-hop basis and prevents attacks such as intrusion, man-in-the-middle, and replay attacks.

The BRIGHTLANE™ Q3244 is manufactured using a standard digital CMOS process and contains all the active circuitry required to implement the physical layer functions to transmit and receive data on a single balanced twisted pair.

The device is designed to directly connect to automotive-grade Graphics Processing Units (GPUs), CPUs, Ethernet switches, and Electronic Control Units (ECUs) via 10G/5G/2.5G USXGMII, 10 Gbps XFI, 5Gbps 5GBase-R or 2.5 Gbps 2500BASE-X interface to support the operations and network rates required for In-Vehicle Networks (IVN).

The device uses advanced mixed-signal processing to perform equalization, echo cancellation, data recovery, and error correction at full line rate. The device achieves robust performance and exceeds automotive Electromagnetic Interference (EMI) requirements in noisy environments with very low power dissipation.

Block diagram

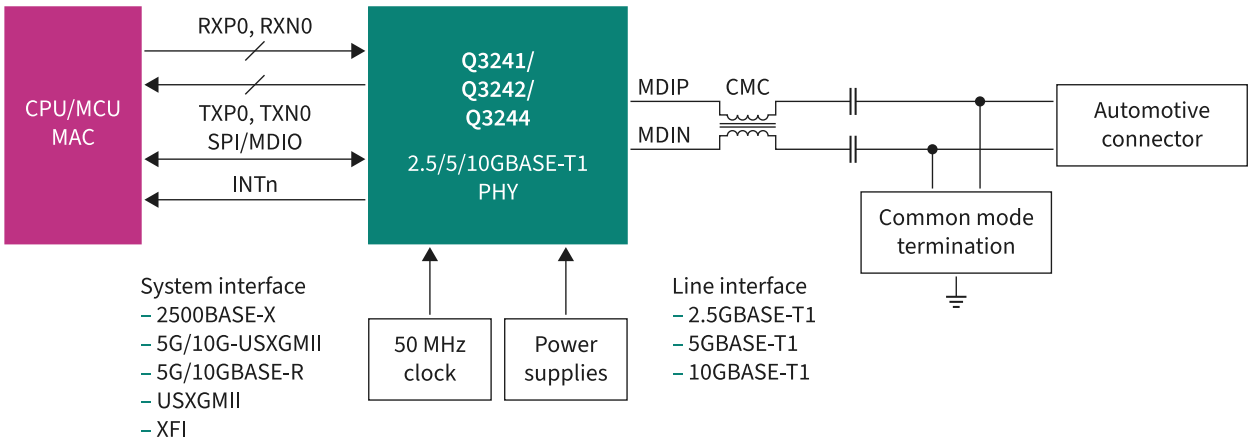

PRODUCT BRIEF

Key features

Features	Benefits
2.5G/5G/10GBASE-T1, IEEE 802.3ch compliant PHY	– Triple speed Ethernet PHY supports operation over Shielded Twisted \pair (STP)
Supports IEEE 802.1AE MACsec	– MACsec provides layer 2 security
Automotive qualified	– AEC-Q100 – Automotive grade 2 (-40 to +105°C)
Automotive package	– 7 mm × 11 mm, 104-pin, LFBGA package, 0.8 mm ball pitch – Supports all speeds – 7 mm × 7 mm, 48-pin QFN, 0.5 mm pitch – Supports 2.5G

Target applications

– Advance driver assistance systems
– Central gateway
– Telematics ECU
– Zonal ECU

Published by
Infineon Technologies AG
Am Campeon 1-15, 85579 Neubiberg
Germany

© 2025 Infineon Technologies AG
All rights reserved.

Public

Date: 08/2025

Important notice
Products are sold or provided and delivered by Infineon Technologies AG and its affiliates ("Infineon") subject to the terms and conditions of the frame supply contract or other written agreement(s) executed by a customer and Infineon or, in the absence of the foregoing, the applicable Sales Conditions of Infineon. General terms and conditions of a customer or deviations from applicable Sales Conditions of Infineon shall only be binding for Infineon if and to the extent Infineon has given its express written consent.

To the fullest extent permissible pursuant to applicable law, with respect to any information given in this document or in any associated documentation, Infineon disclaims all warranties and liabilities of any kind, whether express or implied, including but not limited to any warranties of merchantability, suitability of the products for the intended application or the specific use, or non-infringement of third-party rights.

Subject to the development and release of the products for series supply by Infineon, the technical specifications of the products are set forth in the relevant final data sheet provided by Infineon and, if any, agreed and signed specifications. Infineon's customers are required to evaluate the suitability of the products for the intended application or specific use.

The information given in this document is subject to change by Infineon at any time without notice.

Scan QR code and explore offering
www.infineon.com