PRODUCT BRIEF

BRIGHTLANE™ 88Q120xM MACsec integrated automotive 100Base-T1 PHY

Integrated MACsec, OPEN Alliance TC10 and IEEE 802.3bw compliant automotive Ethernet PHY

The BRIGHTLANE™ 88Q1200M/88Q1201M device is a single-pair Ethernet physical layer transceiver (PHY) that supports operation over Unshielded Twisted Pair (UTP). The transceiver implements the Ethernet physical layer portion of 100BASE-T1 as defined by the IEEE 802.3bw standard.

The 88Q120xM has integrated MACsec that secures against the layer 2 in-vehicle networking security threats. MACsec secures data exchange on a hop-by-hop basis and prevents attacks such as intrusion, man-in-the-middle, and replay attacks.

The 88Q120xM is manufactured using a standard digital CMOS process and contains all the active circuitry required to implement the physical layer functions to transmit and receive data on a single balanced twisted pair. The device family supports reduced pin count GMII (RGMII) and SGMII for direct connection to a MAC/switch port.

The device integrates media dependent interface (MDI) termination resistors into the PHY. This resistor integration simplifies board layout and reduces board cost by reducing the number of external components. The device has a voltage regulator to generate all required voltages. The device can run off a single 3.3 V supply. The device supports 1.8 V, 2.5 V, and 3.3 V LVCMOS I/O standards.

The device uses advanced mixed-signal processing to perform equalization, echo and crosstalk cancellation, data recovery, and error correction at a data rate of 100 Mbps. The device achieves robust performance and exceeds Electromagnetic Interference (EMI) requirements in noisy environments with very low power dissipation.

BRIGHTLANE™ 88Q120xM block diagram

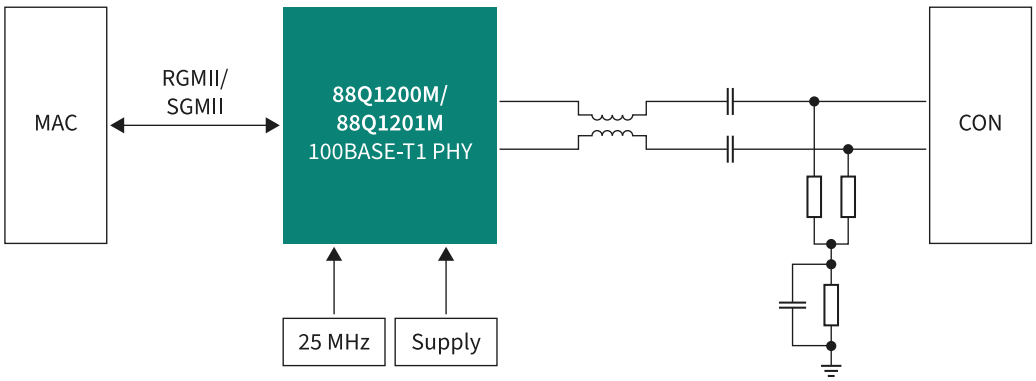

PRODUCT BRIEF

Key features

Features	Benefits
100BASE-T1, IEEE 802.3bw-compliant	– Automotive Ethernet PHY supports operation over Unshielded Twisted Pair (UTP)
Supports IEEE 802.1AE MACsec	– MACsec provides Layer 2 security
OPEN Alliance TC10 sleep mode	– As an IEEE and OPEN Alliance TC10 compliant 1000BASET1 Ethernet PHY, the device supports wake-up and sleep signaling over dedicated I/O pins, as well as through Wake-up Pulse (WUP), Wake-up Request (WUR) and Low Power Sleep (LPS) commands
Automotive qualified	– AEC-Q100 – Automotive Grade 1 (-40 to +125°C)
Automotive package	– 40-QFN, 6.0 x 6.0 mm, 0.5 mm pitch, wettable flanks
Wake on LAN (WoL)	– Saves system power through magic packet or link change detection
Integrated voltage regulators	– 3.3 V only operation
Integrated passive filter network	– Reduced BOM/board space
Integrated virtual cable tester	– VCT tool used for cable diagnostics
Signal Quality Indicator (SQI)	– Signal Quality Indicator (SQI) tool provides Signal-to-Noise Ratio (SNR) data
802.1AS and 1-step PTP	– Support for Precision Time Protocol (PTP)

Target applications

88Q120xM is a secure 100BASE-T1 PHY that has an integrated MACsec and is OPEN Alliance TC10 and 802.3bw compliant, which can be deployed in various domains in the car, including:

– Automotive infotainment systems
– Advanced driver assist systems
– Telematic control units
– Instrumentation clusters

Published by
Infineon Technologies AG
Am Campeon 1-15, 85579 Neubiberg
Germany

© 2025 Infineon Technologies AG
All rights reserved.

Public

Date: 08/2025

Important notice
Products are sold or provided and delivered by Infineon Technologies AG and its affiliates ("Infineon") subject to the terms and conditions of the frame supply contract or other written agreement(s) executed by a customer and Infineon or, in the absence of the foregoing, the applicable Sales Conditions of Infineon. General terms and conditions of a customer or deviations from applicable Sales Conditions of Infineon shall only be binding for Infineon if and to the extent Infineon has given its express written consent.

To the fullest extent permissible pursuant to applicable law, with respect to any information given in this document or in any associated documentation, Infineon disclaims all warranties and liabilities of any kind, whether express or implied, including but not limited to any warranties of merchantability, suitability of the products for the intended application or the specific use, or non-infringement of third-party rights.

Subject to the development and release of the products for series supply by Infineon, the technical specifications of the products are set forth in the relevant final data sheet provided by Infineon and, if any, agreed and signed specifications. Infineon's customers are required to evaluate the suitability of the products for the intended application or specific use.

The information given in this document is subject to change by Infineon at any time without notice.

Scan QR code and explore offering
www.infineon.com