PRODUCT BRIEF

BRIGHTLANE™ 88Q111x second generation automotive 100BASE-T1 PHY

OPEN Alliance TC10 and IEEE 802.3bw compliant automotive Ethernet PHY

The BRIGHTLANE™ 88Q1110/88Q1111 device is a single pair Ethernet physical layer transceiver (PHY) designed for automotive applications. The transceiver implements the Ethernet physical layer portion of the 100BASE-T1 standard as defined by the IEEE 802.3bw task force.

The BRIGHTLANE™ 88Q1110/88Q1111 is manufactured using a standard digital CMOS process and contains all the active circuitry required to implement the physical layer functions to transmit and receive data on a single balanced twisted pair. The 88Q1110 device supports reduced pin count GMII (RGMII), reduced pin count MII (RMII), and media independent interface (MII). The 88Q1111 device also supports Serial GMII (SGMII) for direct connection to a MAC or switch port. SGMII operates at 1.25 Gbps over a single differential pair, reducing power and number of I/Os used on the MAC interface. It integrates media dependent interface (MDI) termination resistors into the PHY.

This resistor integration simplifies board layout and reduces board cost by reducing the number of external components. It has an integrated linear voltage regulator to generate all required voltages.

The device can run off a single 3.3 V supply. The device supports 1.8 V, 2.5 V, and 3.3 V LVCMOS I/O standards. The 88Q1110/88Q1111 is designed to support frame preemption per IEEE 802.3br-2016. It uses advanced mixed-signal processing to perform equalization, echo, data recovery, and error correction at a 100 Mbps data rate.

The device achieves robust performance and exceeds automotive electromagnetic interference (EMI) requirements in noisy environments with very low-power dissipation. This device is compatible to the footprint of the BRIGHTLANE™ 88Q1010 100BASE-T1 and 88Q2110 100/1000BASE-T1 Ethernet PHY transceivers.

BRIGHTLANE™ 88Q1110/88Q1111 block diagram

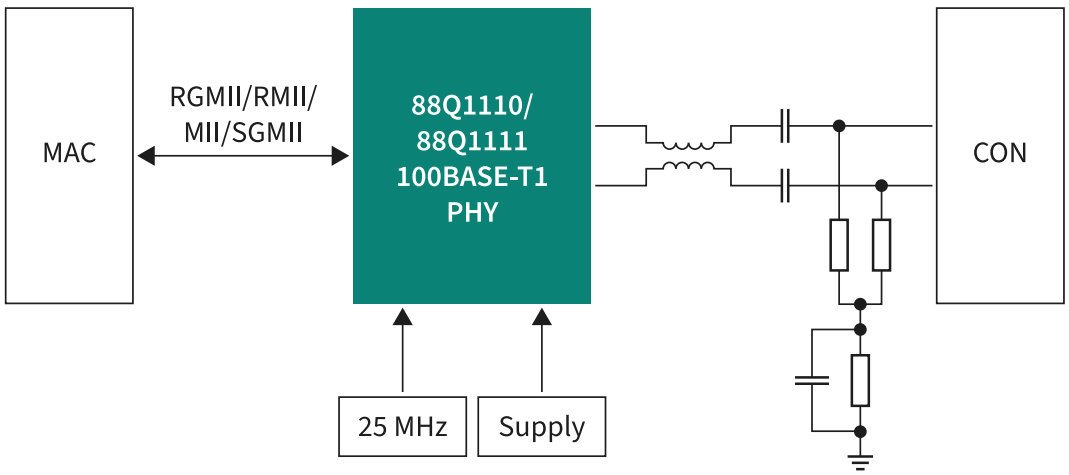

PRODUCT BRIEF

Key features

Features	Benefits
Automotive qualified	– AEC-Q100 – Automotive grade 1 (-40 to +125°C)
Automotive package	– 40-QFN, 6.0 x 6.0 mm, 0.5 mm pitch, wettable flanks
OPEN Alliance TC10 sleep mode	– As an IEEE and OPEN Alliance TC10 compliant 100 BASET1 Ethernet PHY, the 88Q1110/88Q1111 supports wake-up and sleep signaling over dedicated I/O pins, as well as through Wake-Up Pulse (WUP), Wake-Up Request (WUR) and Low Power Sleep (LPS) commands
Wake on LAN (WoL)	– Saves system power through magic packet or link change detection
Integrated LDO	– 3.3 V only operation
Integrated passive filter network	– Reduced BOM/board space
Integrated virtual cable tester	– VCT tool used for cable diagnostics
Signal Quality Indicator (SQI)	– Signal Quality Indicator (SQI) tool provides Signal-to-Noise Ratio (SNR) data
802.1AS and 1-step PTP	– Support for Precision Time Protocol (PTP)

Target applications

88Q111x is an ideal 100BASE-T1 PHY that is OPEN Alliance TC10 and IEEE 802.3bw compliant can be deployed in various domains the car, including:

– Automotive infotainment systems
– Advanced driver assist systems
– Telematic control units
– Instrumentation clusters

Published by
Infineon Technologies AG
Am Campeon 1-15, 85579 Neubiberg
Germany

© 2025 Infineon Technologies AG
All rights reserved.

Public

Date: 08/2025

Important notice
Products are sold or provided and delivered by Infineon Technologies AG and its affiliates ("Infineon") subject to the terms and conditions of the frame supply contract or other written agreement(s) executed by a customer and Infineon or, in the absence of the foregoing, the applicable Sales Conditions of Infineon. General terms and conditions of a customer or deviations from applicable Sales Conditions of Infineon shall only be binding for Infineon if and to the extent Infineon has given its express written consent.

To the fullest extent permissible pursuant to applicable law, with respect to any information given in this document or in any associated documentation, Infineon disclaims all warranties and liabilities of any kind, whether express or implied, including but not limited to any warranties of merchantability, suitability of the products for the intended application or the specific use, or non-infringement of third-party rights.

Subject to the development and release of the products for series supply by Infineon, the technical specifications of the products are set forth in the relevant final data sheet provided by Infineon and, if any, agreed and signed specifications. Infineon's customers are required to evaluate the suitability of the products for the intended application or specific use.

The information given in this document is subject to change by Infineon at any time without notice.

Scan QR code and explore offering
www.infineon.com