TRAVEO™ CYTVII-B-H-16M-320-CPU T2G Evaluation Board user guide

About this document

Scope and purpose

This document provides a comprehensive understanding of the TRAVEO™ CYTVII-B-H-16M-320-CPU T2G Evaluation Board , which is based on the TRAVEO™ T2G CYT6BJ device from the TRAVEO™ Body High family of microcontrollers.

The document describes the board's features, functions, available interfaces, and guidelines for using the hardware interfaces, enabling users to thoroughly understand how to utilize the board and its capabilities.

Intended audience

This document is designed for all customers who are interested in evaluating the capabilities of the TRAVEO™ T2G Body High family CYT6BJ device. Its main purpose is to offer a comprehensive guide that outlines the various features of the device and how it can be used in a range of applications. The document offers valuable insights and guidance in testing new software or exploring hardware designs.

Evaluation Board

The purpose of this board is to assist with software evaluation during the design-in process. However, it is important to note that this board is not intended for use in the final customer design. The PCB and auxiliary circuits are designed to provide a simplified platform for software evaluation purposes, and are not optimized to meet the specific needs and requirements of the end user.

Important notice

“Evaluation Boards and Reference Boards” shall mean products embedded on a printed circuit board (PCB) for demonstration and/or evaluation purposes, which include, without limitation, demonstration, reference and evaluation boards, kits and design (collectively referred to as “Reference Board”).

Environmental conditions have been considered in the design of the Evaluation Boards and Reference Boards provided by Infineon Technologies. The design of the Evaluation Boards and Reference Boards has been tested by Infineon Technologies only as described in this document. The design is not qualified in terms of safety requirements, manufacturing and operation over the entire operating temperature range or lifetime.

The Evaluation Boards and Reference Boards provided by Infineon Technologies are subject to functional testing only under typical load conditions. Evaluation Boards and Reference Boards are not subject to the same procedures as regular products regarding returned material analysis (RMA), process change notification (PCN) and product discontinuation (PD).

Evaluation Boards and Reference Boards are not commercialized products, and are solely intended for evaluation and testing purposes. In particular, they shall not be used for reliability testing or production. The Evaluation Boards and Reference Boards may therefore not comply with CE or similar standards (including but not limited to the EMC Directive 2004/EC/108 and the EMC Act) and may not fulfill other requirements of the country in which they are operated by the customer. The customer shall ensure that all Evaluation Boards and Reference Boards will be handled in a way which is compliant with the relevant requirements and standards of the country in which they are operated.

The Evaluation Boards and Reference Boards as well as the information provided in this document are addressed only to qualified and skilled technical staff, for laboratory usage, and shall be used and managed according to the terms and conditions set forth in this document and in other related documentation supplied with the respective Evaluation Board or Reference Board.

It is the responsibility of the customer’s technical departments to evaluate the suitability of the Evaluation Boards and Reference Boards for the intended application, and to evaluate the completeness and correctness of the information provided in this document with respect to such application.

The customer is obliged to ensure that the use of the Evaluation Boards and Reference Boards does not cause any harm to persons or third party property.

The Evaluation Boards and Reference Boards and any information in this document is provided "as is" and Infineon Technologies disclaims any warranties, express or implied, including but not limited to warranties of non-infringement of third party rights and implied warranties of fitness for any purpose, or for merchantability.

Infineon Technologies shall not be responsible for any damages resulting from the use of the Evaluation Boards and Reference Boards and/or from any information provided in this document. The customer is obliged to defend, indemnify and hold Infineon Technologies harmless from and against any claims or damages arising out of or resulting from any use thereof.

Infineon Technologies reserves the right to modify this document and/or any information provided herein at any time without further notice.

Safety precautions

***Note**: Please note the following warnings regarding the hazards associated with development systems*

Table 1 Safety precautions

	**Caution:** *The evaluation or reference board contains parts and assemblies sensitive to electrostatic discharge (ESD). Electrostatic control precautions are required when installing, testing, servicing or repairing the assembly. Component damage may result if ESD control procedures are not followed. If you are not familiar with electrostatic control procedures, refer to the applicable ESD protection handbooks and guidelines.*
	**Caution:** *The evaluation or reference board is shipped with packing materials that need to be removed prior to installation. Failure to remove all packing materials that are unnecessary for system installation may result in overheating or abnormal operating conditions.*

Table of contents

About this document . . . 1

Important notice . . . 2

Safety precautions . . . 3

Table of contents . . . 4

1 Getting started . . . 6

1.1 Board Overview . . . 6

1.1.1 Introduction . . . 6

1.1.2 Features . . . 6

1.1.3 Peripheral details . . . 7

1.2 Kit content . . . 9

1.3 Initial jumpers' configuration . . . 10

1.4 Powering up the board . . . 11

1.5 Preprogrammed firmware . . . 12

2 Compilation and Programming the board . . . 14

2.1 TRAVEO™ T2G Sample driver Library (SDL) . . . 14

2.1.1 Download and Installation of TRAVEO™ T2G SDL . . . 14

2.2 IAR Embedded Workbench for Arm® . . . 16

2.2.1 Setting up the IDE . . . 16

2.2.2 Compiling using IAR Embedded workbench . . . 16

2.2.3 Programming using IAR Systems i-jet debugger . . . 19

2.2.3.1 Blink an LED . . . 19

2.3 TRAVEO™ T2G Auto Flash Utility . . . 20

2.3.1 Download and Installation of TRAVEO™ T2G Auto Flash Utility . . . 20

2.3.2 Programming . . . 20

2.4 Green Hills Software's MULTI® IDE . . . 21

2.4.1 Setting up the IDE . . . 21

2.4.2 Compiling in GHS's MULTI IDE . . . 21

2.4.3 Programming using GHS Tool . . . 23

2.4.3.1 Blink an LED . . . 23

3 Functional description . . . 26

3.1 TRAVEO™ T2G CYT6BJ MCU . . . 26

3.2 Power supply . . . 26

3.3 PMIC . . . 28

3.4 Clock . . . 30

3.5 Reset . . . 31

3.6 User Interfaces . . . 31

3.6.1 User LEDs . . . 31

3.6.2 User Push buttons . . . 32

Table of contents

3.7 Communication Interfaces . . . 33
3.7.1 UART to USB Transceiver . . . 33
3.7.2 CAN FD . . . 33
3.7.3 LIN . . . 34
3.7.4 FLEXRAY . . . 35
3.7.5 Ethernet . . . 35
3.7.5.1 Automotive Ethernet . . . 35
3.7.5.2 Gigabit Ethernet . . . 36
3.8 External Memory and interfaces . . . 37
3.8.1 HYPERBUS™ . . . 37
3.8.1.1 H-Flash . . . 37
3.8.1.2 H-RAM . . . 37
3.8.2 Quad SPI . . . 38
3.8.3 SD/eMMC connector . . . 39
3.9 Audio Interface . . . 39
3.10 Program and Debug interface . . . 40

4 Kit design documents . . . 42
4.1 Board Image . . . 43
4.2 Schematic diagrams . . . 44
4.3 Assembly drawings . . . 75
4.4 Bill of materials . . . 76
4.5 Pin out details . . . 82

5 Additional information . . . 90
5.1 Test points . . . 90
5.2 Advanced features . . . 92
5.2.1 Audio Interface . . . 92
5.2.2 Base Board . . . 92
5.2.2.1 Connectors . . . 92
5.2.2.2 Components . . . 92

References . . . 94

Glossary . . . 95

Revision history . . . 97

Disclaimer . . . 98

1 Getting started

This section provides an overview of the TRAVEO™ T2G B-H-16M 320 CPU Evaluation Board and offers step-by-step guidance on how to set up and power up the board. Additionally, it provides instructions on how to run the preprogrammed firmware and configuration of default jumpers to ensure a hassle-free experience.

1.1 Board Overview

This section provides the brief introduction of the TRAVEO™ T2G B-H-16M 320 CPU Evaluation Board and the details about all the various interfaces and peripherals available in the board.

1.1.1 Introduction

The TRAVEO™ CYTVII-B-H-16M-320-CPU T2G Evaluation Board enables you to evaluate and develop applications using the TRAVEO™ T2G Body High family device CYT6BJ as MCU.

The TRAVEO™ CYTVII-B-H-16M-320-CPU T2G Evaluation Board is specifically designed for automotive applications and features up to four 320 MHz Arm® Cortex® -M7 processors as the primary application processors, a 100-MHz Arm® Cortex® -M0+ processor that supports low-power operations, up to 16 MB flash and 2 MB SRAM, and programmable analog and digital peripherals that allow for faster time-to-market.

1.1.2 Features

The key features of the TRAVEO™ CYTVII-B-H-16M-320-CPU T2G Evaluation Board are as follows:

- TRAVEO™ T2G CYT6BJ device (MCU)
- Supports up to 10 CAN FD channels
- Up to 11 runtime-reconfigurable serial communication block (SCB) channels
- Up to 20 independent LIN channels
- Two 10/100/1000 Mbps Ethernet MAC interfaces
- A Flex-Ray interface supporting data rates up to 10 Mbps
- 64 Mbit HYPERRAM™ DRAM memory (S27KL)
- 512 Mbit SEMPER™ octal flash memory (S26HL)
- 512 Mbit Dual QSPI NOR flash (S25HL)
- An Automotive Ethernet interface
- A Gigabit Ethernet interface with RJ45 connector
- A mini-B type connector for an USB device interface
- Two user LEDs and one user push button
- Four different program/debug interfaces

The board supports operating voltages from 2.7 V to 5.5 V for the TRAVEO™ T2G B-H MCU.

The TRAVEO™ CYTVII-B-H-16M-320-CPU T2G Evaluation Board can be used with Infineon Automotive Body MCU base board to enable communication with various automotive interfaces, such as CAN, LIN and Flex-Ray. To develop and debug projects on the TRAVEO™ T2G B-H, you can use the IAR workbench or Green hills software, which are the set of tools that enable you to integrate these devices into your existing development methodology, these are few of the IDEs. Refer Compilation and Programming the board to know more about all supported IDEs.

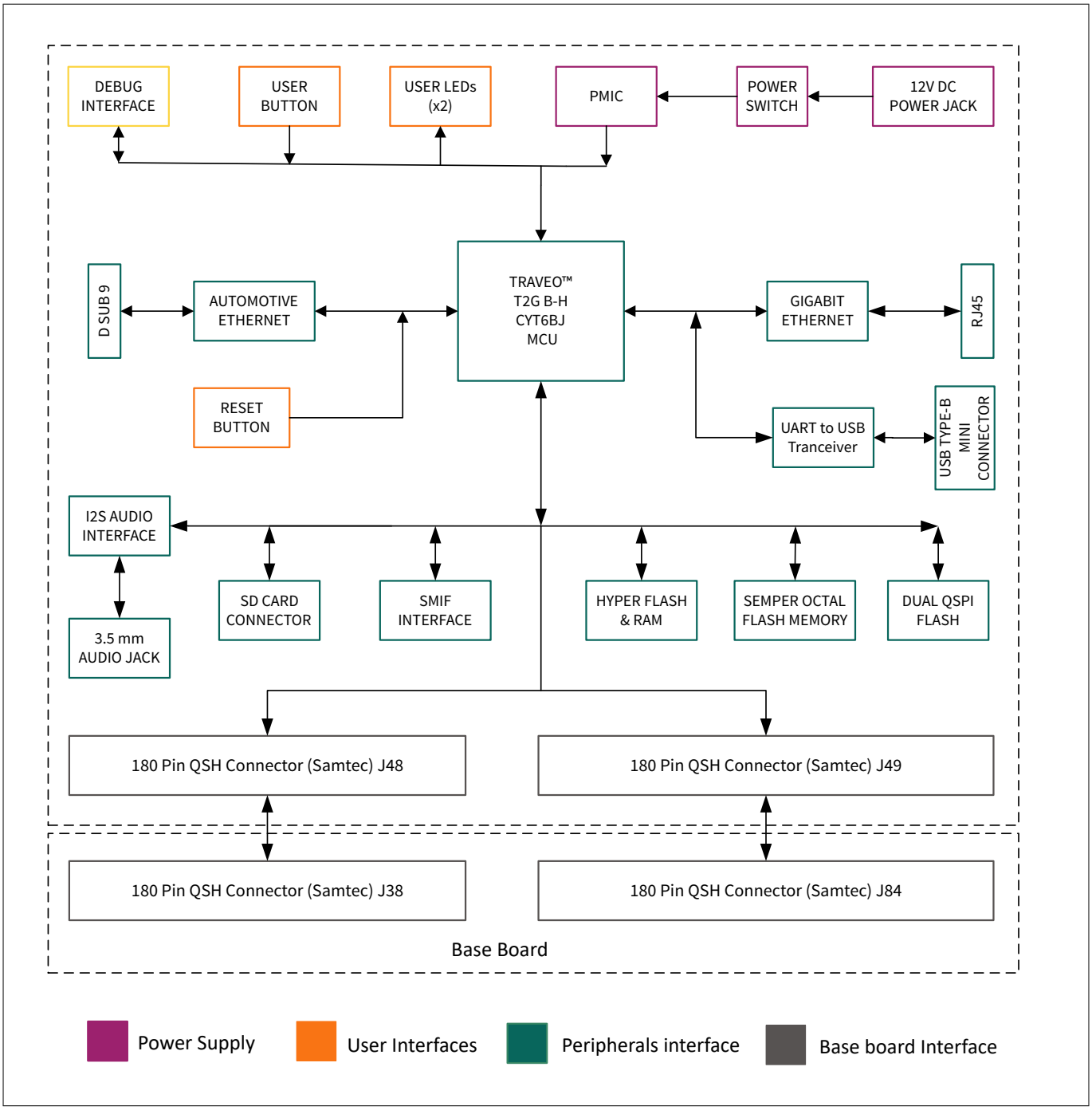

Figure 1 Block diagram of TRAVEO™ T2G B-H-16M 320 CPU Evaluation Board

1.1.3 Peripheral details

This section provides an overview of the various interfaces and peripherals available in the TRAVEO™ CYTVII-B-H-16M-320-CPU T2G Evaluation Board.

1 Getting started

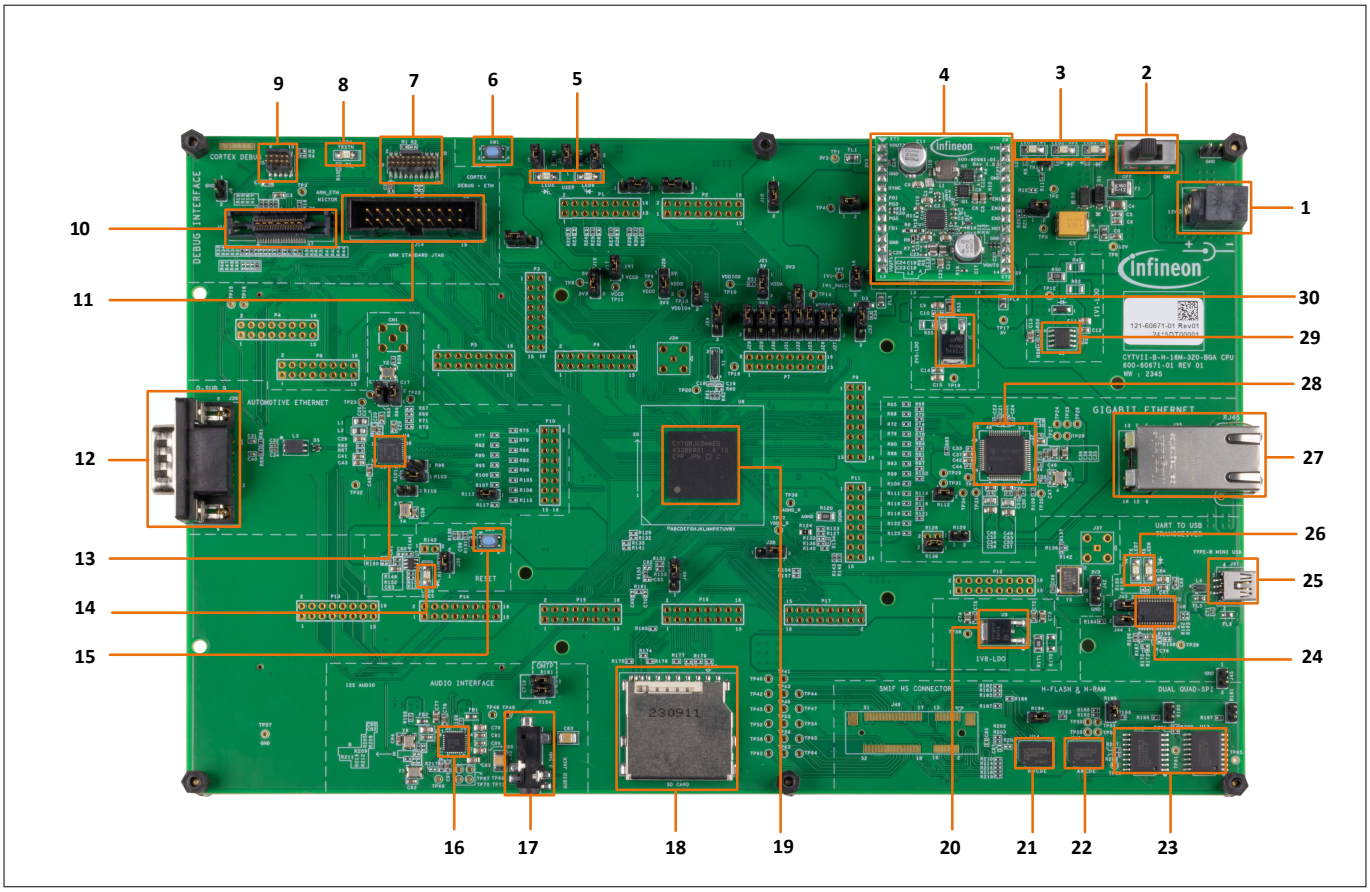

Figure 2 **Peripheral and interfaces in the TRAVEO™ CYTVII-B-H-16M-320-CPU T2G Evaluation Board**

Sl.no	Reference designator	Description
1	J12	12 V DC Power jack
2	SW2	Power switch
3	LED1, LED2, LED3	Power monitor LEDs (LED1-1V1, LED2-3V3, LED3-5V)
4	U1	PMIC board
5	LED5, LED6	User LEDs
6	SW1	User switch
7	J6	MIPI-20 Cortex® debug + ETM connector to program and debug the kit
8	LED4	MCU tap controller reset LED
9	J5	Cortex® Debug connector to program and debug the kit
10	J15	Arm® ETM Mictor connector to program and debug the kit
11	J14	Arm® Standard-20 pin JTAG connector to program and debug the kit
12	J36	D-SUB 9 Automotive ethernet connector
13	U4	Automotive ethernet controller (TJA1101BHN/0Z - NXP)
14	LED9	TRAVEO™ T2G CYT6BJ MCU reset LED
15	SW3	TRAVEO™ T2G CYT6BJ MCU reset button

Sl.no	Reference designator	Description
16	U11	Audio codec (TLV320AIC26IRHBR - TI)
17	J47	Audio jack
18	U10	SD card connector
19	U6	TRAVEO™ T2G CYT6BJCDHE MCU
20	U9	1.8 V LDO
21	U14	64 Mb HYPERRAM™ DRAM memory
22	U15	512 Mb SEMPER™ Octal flash memory
23	U12, U13	Quad SPI 256 Mb flash memory (S25HL512TFAMHB010 - Infineon)
24	U8	USB-UART controller (CY7C65213-28PVXI – Infineon)
25	J41	USB Type-B Mini connector
26	LED7, LED8	UART RX and TX LEDs
27	J35	RJ45 Connector
28	U5	Gigabit Ethernet controller (DP83867IR – TI)
29	U2	1.1 V LDO
30	U3	2.5 V LD

1.2 Kit content

This section provides a detailed list of the components that are included in the kit.

Quantity	Description	Remarks
1	TRAVEO™ T2G CYTVII-B-H-16M-320-CPU Rev-01	TRAVEO™ T2G CYTVII-B-H-16M-320-CPU Evaluation Board
1	USB Mini-B cable	For USB-UART interface
1	12 V universal power adaptor	To powerup the board
1	Quick start guide	For quick start



Figure 3 Kit content of the TRAVEO™ CYTVII-B-H-16M-320-CPU T2G Evaluation Board

1.3 Initial jumpers' configuration

This section describes the initial jumper position required for powering up the board and running the preprogrammed firmware.

Jumper	Position	Function
J17	Short	1.1 V power to MCU (CPU_VCCD)
J18	Short	PMIC 1V1 Out
J19	1 – 2: short	5 V power to MCU (CPU_VDDIO1)
J20	1 – 2: short	5 V power to MCU (CPU_VDDD)
J21	1 – 2: short	5 V power to MCU (CPU_VDDA/CPU_VDDIO2)
J22	Short	3.3 V power to MCU (CPU_VDDA/CPU_VDDIO4)
J23	Short	3.3 V power to MCU (CPU_VDDIO3)
J43	Short	UART TX (Used for preprogrammed firmware)
J44	Short	UART RX (Used for preprogrammed firmware)

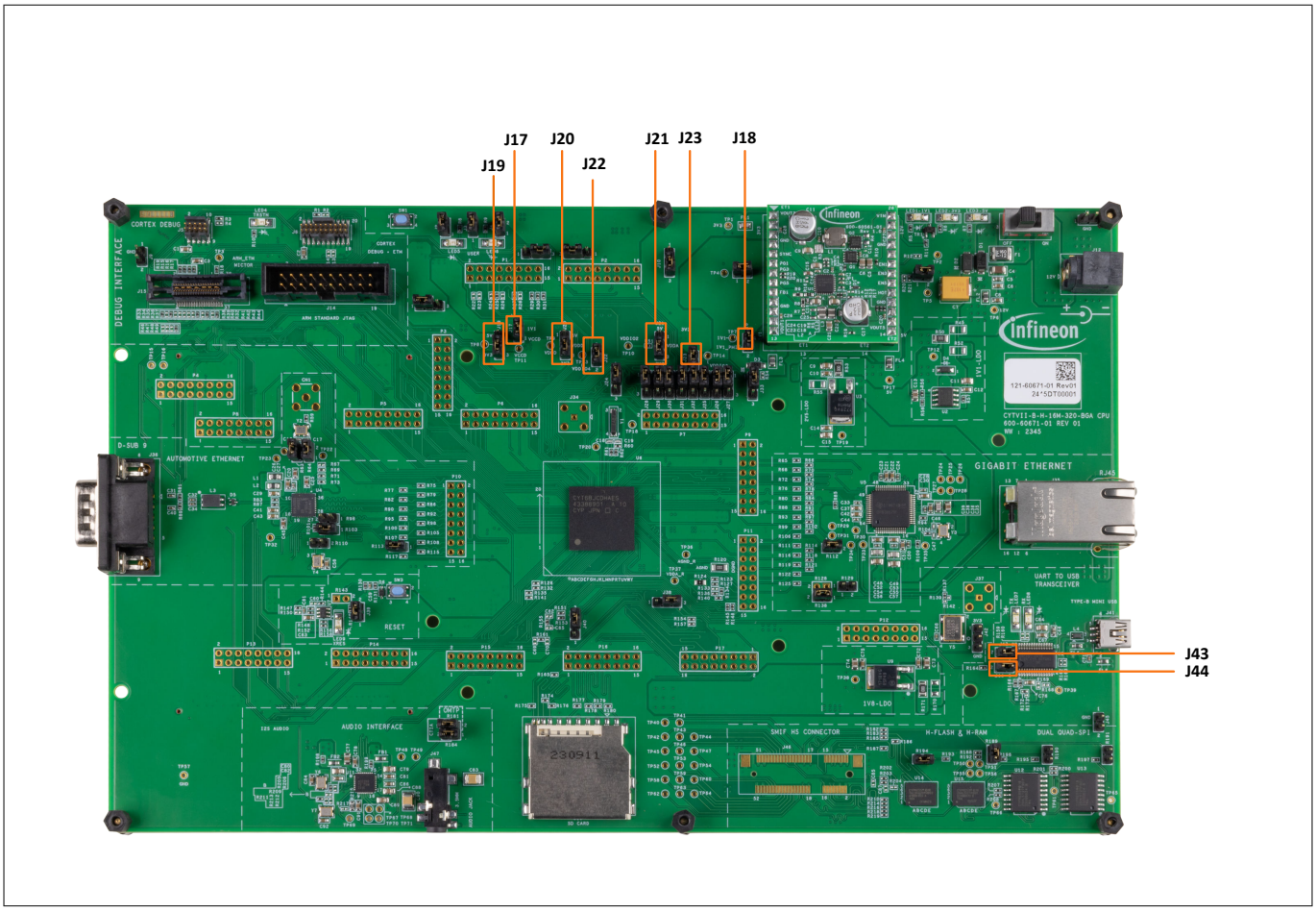

Figure 4 Jumpers position in the TRAVEO™ CYTVII-B-H-16M-320-CPU T2G Evaluation Board

1.4 Powering up the board

This section provides step-by-step guidance on how to power up the TRAVEO™ CYTVII-B-H-16M-320-CPU T2G Evaluation Board.

The TRAVEO™ CYTVII-B-H-16M-320-CPU T2G Evaluation Board can be powered up by using the 12 V DC power adapter provided inside the box.

1. Verify the initial jumper positions before powering up the board
2. Connect the 12 V DC power adaptor to the power jack (J12)
3. Switch ON the power switch (SW2)
4. Observe that power indication LEDs (LED1-1V1, LED2-3V3 and LED3-5V) are glowing green
5. Observe that Reset LED (LED9) is OFF

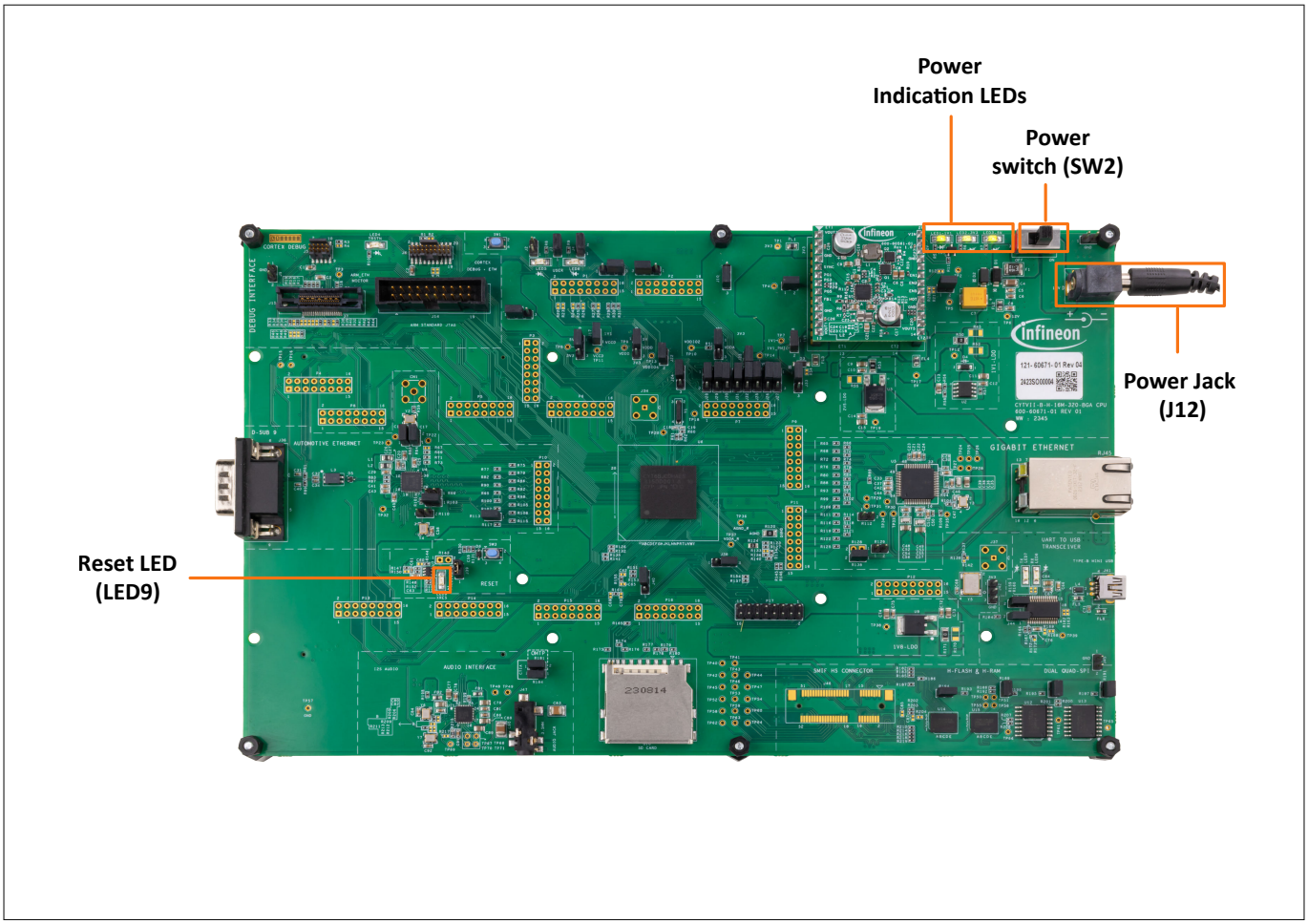

Figure 5 **Powering up the TRAVEO™ T2G B-H-16M 320 CPU Evaluation Board**

1.5 Preprogrammed firmware

The TRAVEO™ CYTVII-B-H-16M-320-CPU T2G Evaluation Board is shipped with preloaded software that is ready to run as soon as the board is powered up. This software includes the results of all the interfaces tests and can be a valuable resource for developers who want to verify the functionality status of the board, ensuring it is in a working condition.

1. Connect the board with your PC via the USB Mini-B cable provided with the kit
2. Open any serial terminal software (such as Termite or Tera Term) in your PC
3. Configure the connection for “Serial” and choose the USB-serial port in the port option
4. Go to **Setup** > **Serial port** > **Speed** and select 115200 as the baud rate. Click the New setting button to create a new configuration
5. Press the MCU reset button (SW3) on the board. The silicon details and test results of the peripherals are printed on serial terminal screen
6. Observe that the user LEDs on the board start blinking in a pattern

1 Getting started

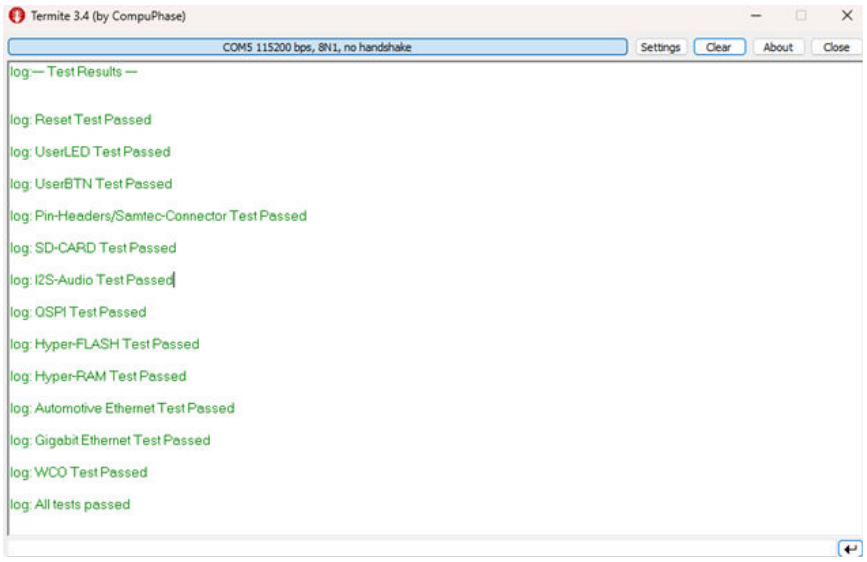

Figure 6 Test log printed on the serial terminal window

2 Compilation and Programming the board

This section provides information about Infineon's Sample driver Library (SDL) for TRAVEO™ T2G devices, Download and installation steps of TRAVEO™ T2G Sample driver SDL, how to compile using IAR Embedded workbench, available programming interfaces in this board, how to program the board using these interfaces, and about other programming tools.

2.1 TRAVEO™ T2G Sample driver Library (SDL)

Infineon Sample driver Library (SDL) simplifies software development for TRAVEO™ T2G devices, which includes:

1. Device-specific header files that provide a complete definition of all peripheral registers and bitfields in each device
2. CMSIS-compliant startup code to initialize the system after device reset, and transfer the code execution to main()
3. Template workspaces, linker files for each supported device, and toolchain (IAR and GHS)
4. Peripheral drivers and middleware
5. Code examples covering all basic functions of all peripherals supported by the device
6. Tool specific patches to support download and debug, and SVD (system view description) filesInfineon's Sample driver Library (SDL) supports the following toolchains



Figure 7 Toolchains supported by Infineon's Sample driver Library (SDL)

2.1.1 Download and Installation of TRAVEO™ T2G SDL

1. Download the latest TRAVEO™ T2G Sample driver Library
2. Install the SDL in a location outside the default program files so that the IDE can easily access and create temporary files

Download TRAVEO™ Sample driver Library

2 Compilation and Programming the board

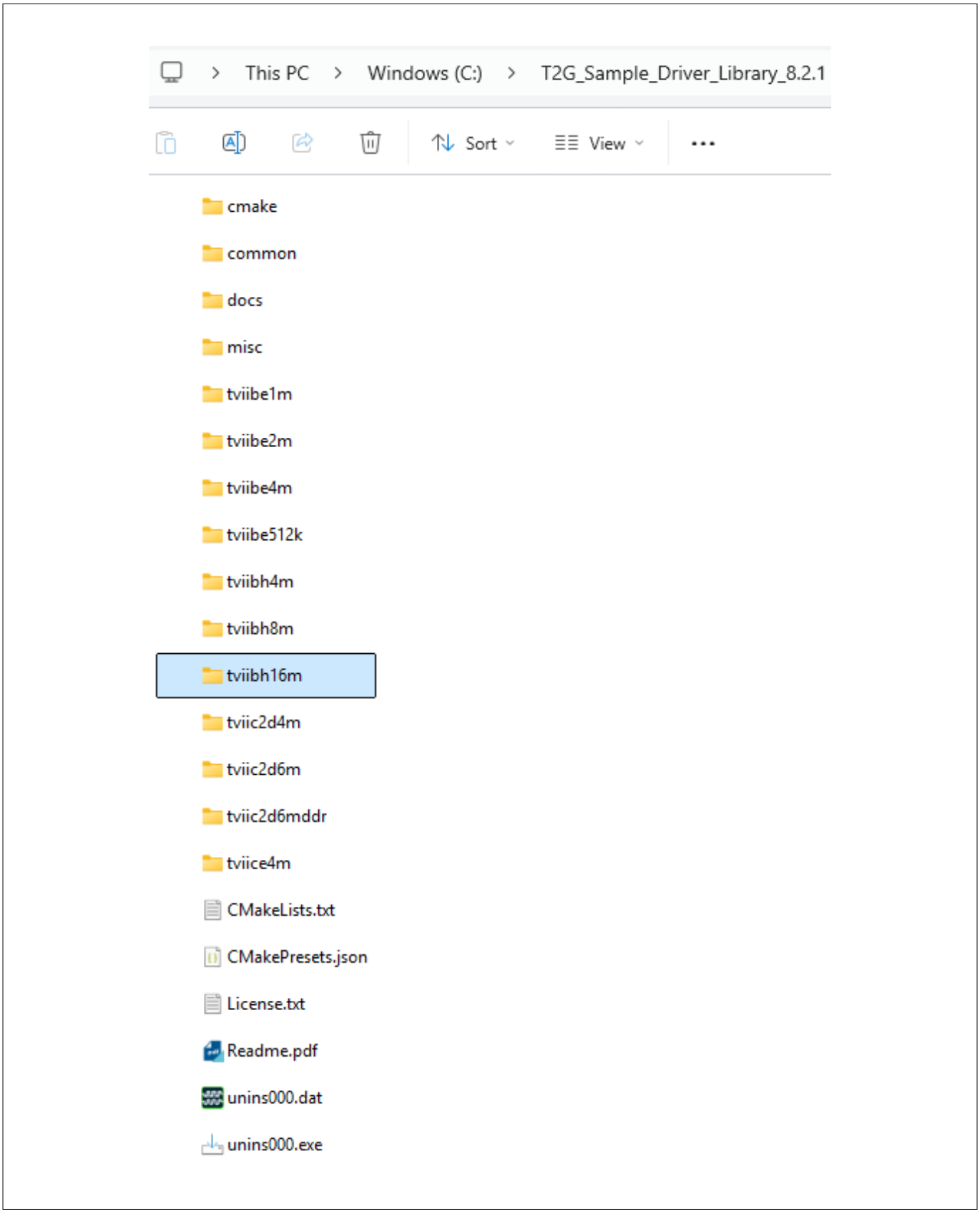

Figure 8 **Sample driver Library (SDL) Folder structure and folder for TRAVEO™ T2G B-H-16M 320 CPU Evaluation Board**

2.2 IAR Embedded Workbench for Arm®

2.2.1 Setting up the IDE

1. Open the **Readme.pdf** file available inside the SDL folder that was downloaded earlier and use the provided link from that file to download the version of IAR EWARM that is supported by that SDL version
2. Download the IAR Embedded Workbench software and run the installation
3. When you open IAR EWARM for the first time, select the license in the License wizard. If you do not have the license, register for a code size limited license type
4. After downloading and setting up the IDE, extract the folder from the path: `SDL (version 7.9.0 or higher)-> misc. -> tools ->iar -> IAR_EWARM_9321_FlashLoader_Patch_TraveoII.zip`
5. Then Follow the instructions from the **readme.txt** document file available in that folder for copying the patch files to support SDL and the device with that IAR Embedded Workbench IDE
6. The IAR Embedded Workbench for Arm® tool and T2G SDL drivers are now ready for programming and debugging the TRAVEO™ CYTVII-B-H-16M-320-CPU T2G Evaluation Board

2.2.2 Compiling using IAR Embedded workbench

1. Open the IAR Embedded Workbench 9.32.1 and navigate to **File** > **Open Workspace**. Then, navigate to the path where you have installed the T2G SDL, and select the path given below:

   `T2G_Sample_Driver_Library_8.2.1\ tviibh16m\ tools\ iar\flash` and double click **tviibh16m_flash_cm0plus_template**
2. Select **rev_a** from the drop-down under **Workspace** in the **Workspace tab**.

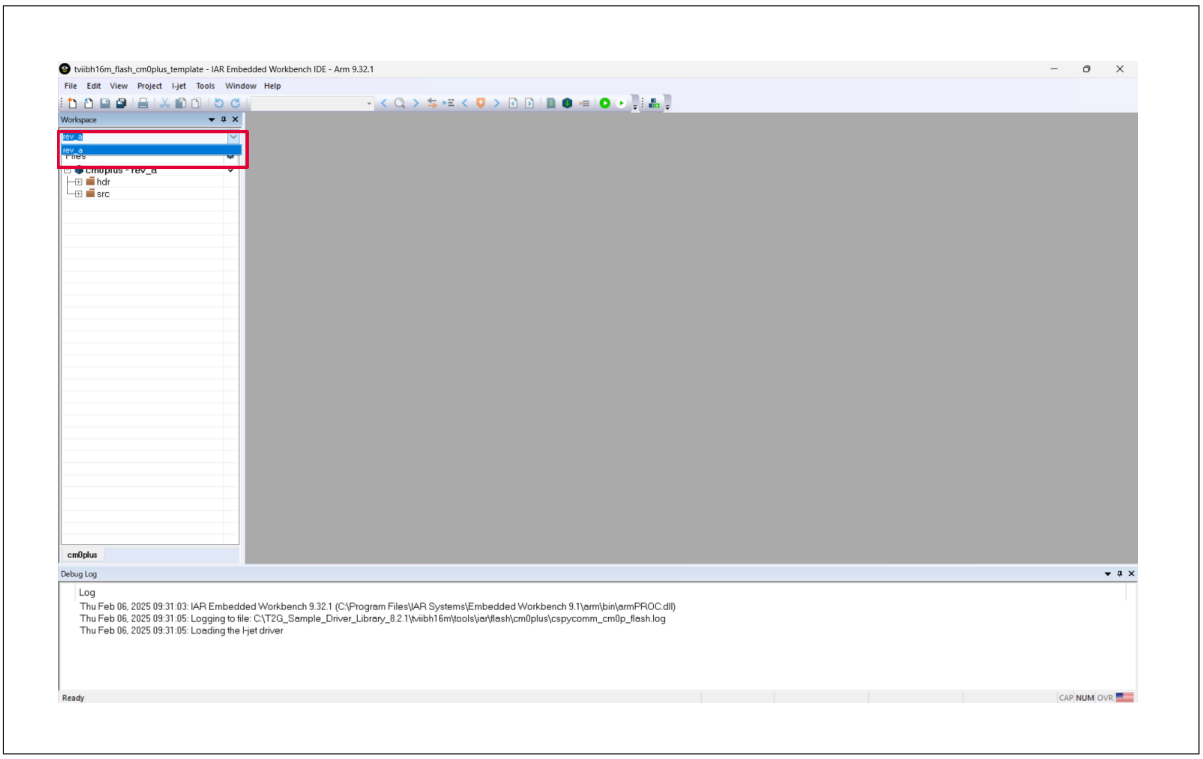

Figure 9 **Selection of rev_a workspace for T2G B-H-16M 320 CPU Evaluation Board in IAR**

3. Expand the **src** folder in the Workspace tab to locate the **main_cm0plus.c** file

2 Compilation and Programming the board

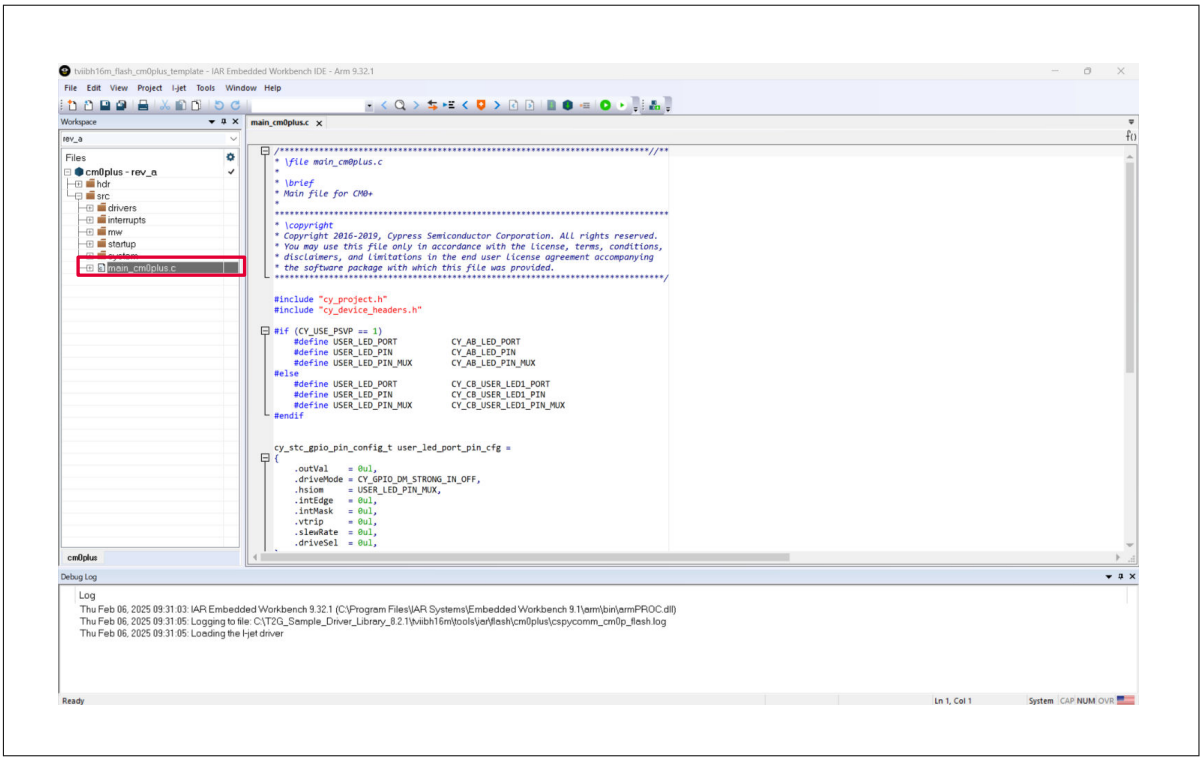

Figure 10 Opening main C file in IAR

4. To ensure the correct debugger is selected, right-click on **cm0plus – rev_a** in the Workspace window, Select **Options** > **Debugger** > **Setup** > **I-jet** > **DriversOK**

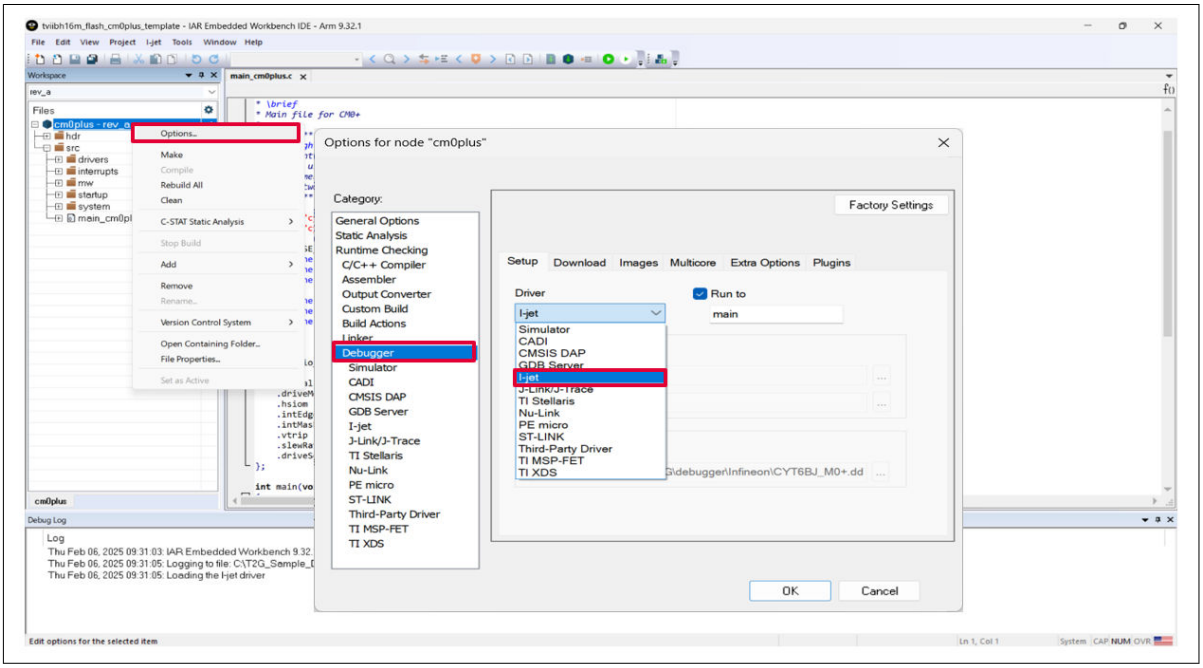

Figure 11 Checking the debugger option in IAR

5. For the build, right-click on **cm0plus – rev_a** in the Workspace window and select the **Rebuild All**

2 Compilation and Programming the board

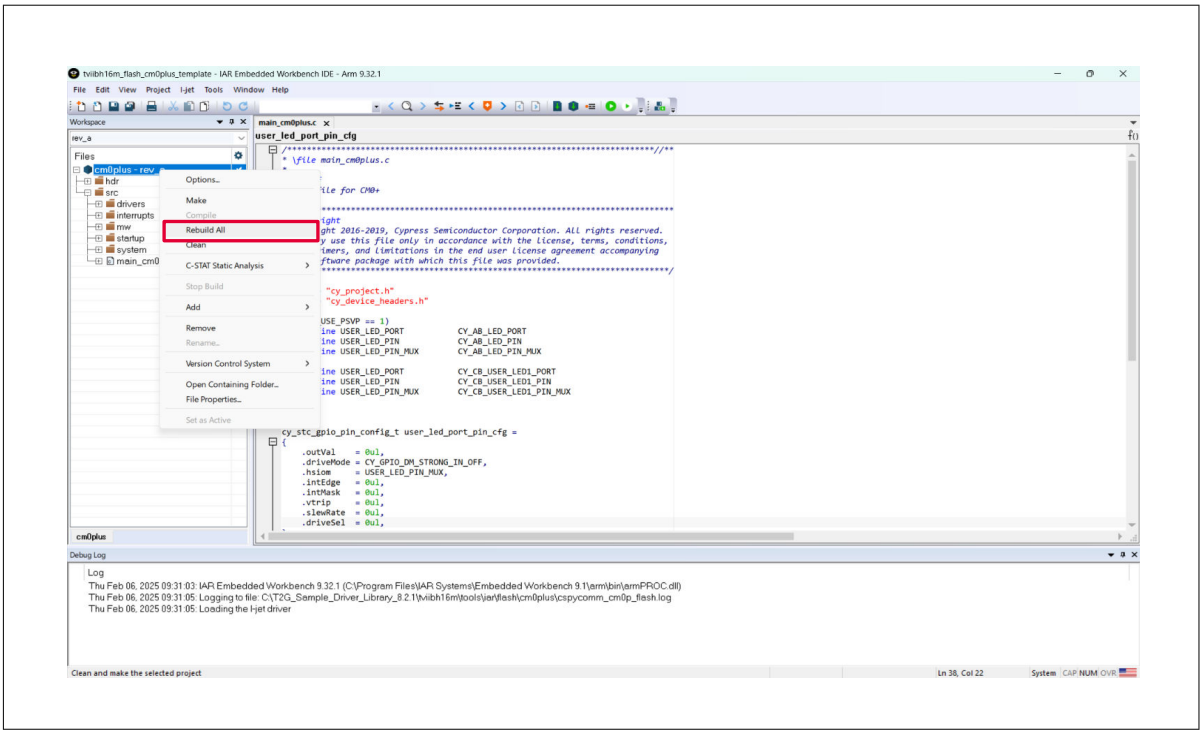

Figure 12 Compiling and building the code in IAR

6. Check for errors and warnings in the **Build Log** as the rebuild process begins. If the build window does not appear on the screen, go to **View** > **Messages** > **Build**

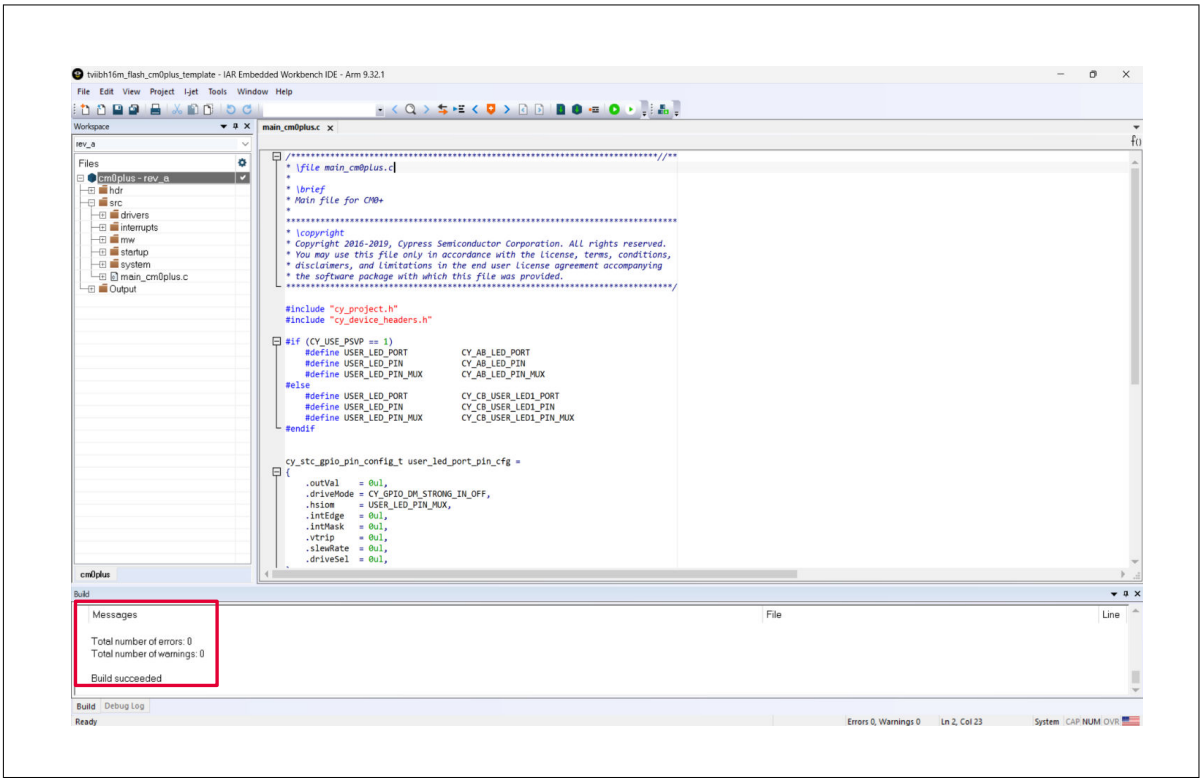

Figure 13 Checking for errors and warnings after build in IAR

2.2.3 Programming using IAR Systems i-jet debugger

This section describes programming the TRAVEO™ T2G B-H-16M 320 CPU Evaluation Board using the IAR Systems i-jet debugger.

Follow the steps below to program the kit using the IAR Embedded Workbench for Arm® tool and the IAR Systems i-jet debugger:

1. Refer to the section Powering up the board to power-up the kit
2. After powering up the kit, connect the i-jet debugger to any of the debugging interfaces available on the board based on the type of converter you have. Refer to TRAVEO™ T2G CYT6BJ MCU to know about various programming and debugging interfaces available on this board

2.2.3.1 Blink an LED

This section provides instructions on how to blink the user LEDs using the IAR Embedded Workbench for Arm® 9.32.1 tool with the TRAVEO™ CYTVII-B-H-16M-320-CPU T2G Evaluation Board

1. To load the program to the flash region of CM0+ core, click **Download and Debug** icon in the toolbar.

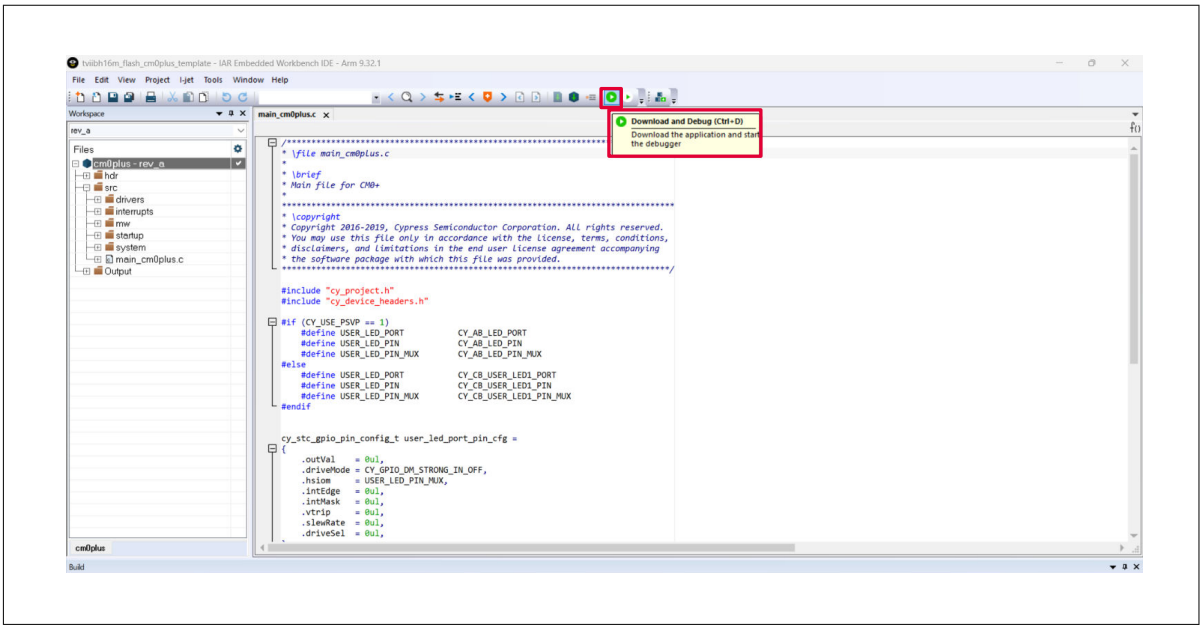

Figure 14 Downloading and debugging the code in IAR workspace

2. Click the **Go** icon to start the execution.

   Function keys from the keyboard can also be used in the Debug window as:

   - F5 (Go)
   - F10 (Step Over)
   - F11 (Step into)
   - Ctrl+D (Download and Debug)

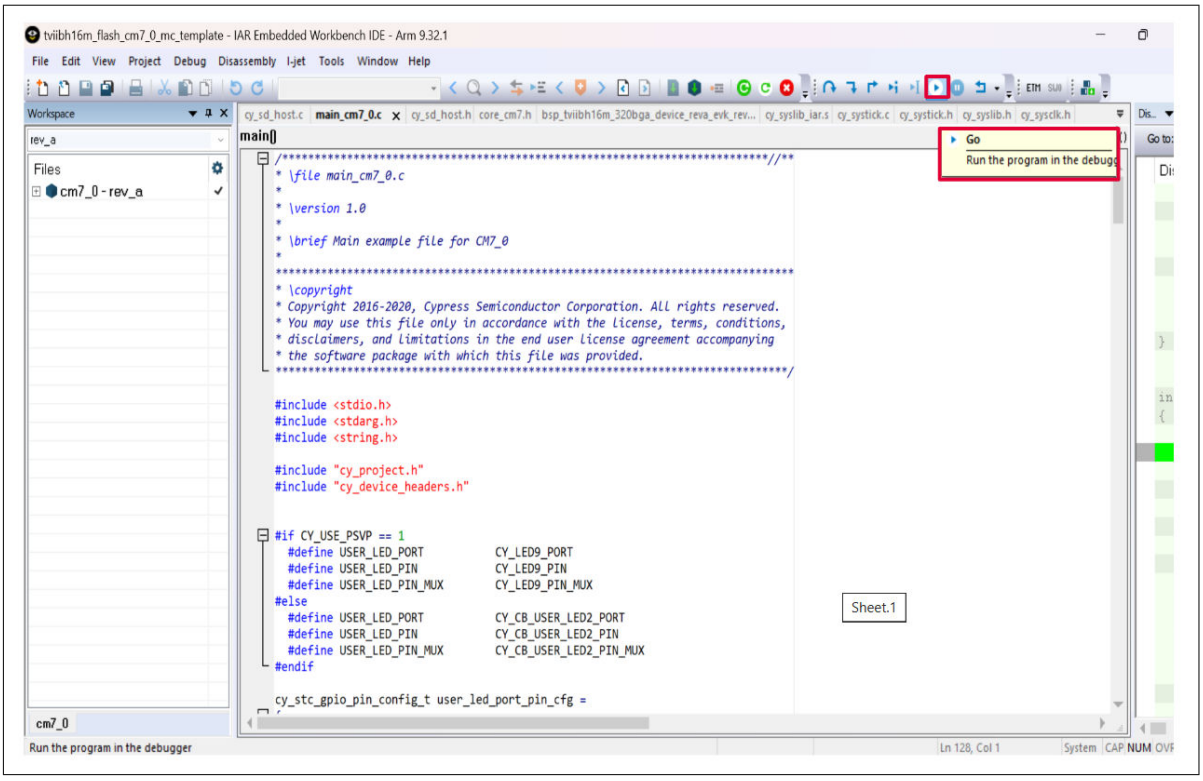

Figure 15 Running the code in IAR workspace for T2G B-H-16M 320 CPU Evaluation Board

3. In free-running execution, user LEDs will start blinking on the board

2.3 TRAVEO™ T2G Auto Flash Utility

This section provides information about Infineon's TRAVEO™ T2G Auto Flash Utility, Download and installation procedure, setting up the tool and flashing the board using the tool

Infineon TRAVEO™ T2G Auto Flash Utility is a flexible, cross-platform, integrated application to allow programming Infineon devices. It can perform Program, Erase, Verify, and Read operations on the flash of the target device. It can target an entire device, a specific region, a sector, and even a byte of a device.

2.3.1 Download and Installation of TRAVEO™ T2G Auto Flash Utility

1. Download the latest TRAVEO™ T2G Auto Flash Utility
2. Install the TRAVEO™ T2G Auto Flash Utility

2.3.2 Programming

This section describes programming the TRAVEO™ T2G B-H-16M 320 CPU Evaluation Board using Infineon Auto Flash Utility.

Follow the below steps to program the board using Auto Flash Utility tool:

1. Refer to the section Powering up the board to power-up the kit
2. Connect the Miniprog4 programmer to any of the debugging interfaces available on the board based on the type of converter you have and connect the USB cable from the Miniprog4 to the USB port of the PC, refer section Program and Debug interface to know about various programming and debugging interfaces available on this board
3. Run the commands from the command prompt to use the Auto Flash Utility tool for flashing codes

Instructions for AutoFlashUtility

```
openocd.exe -s ../scripts -f interface/kitprog4.cfg -f target/traveo2_16m.cfg -c "cm0_plus.hex verify; exit
```

```
openocd.exe -s ../scripts -f interface/kitprog3.cfg -f target/traveo2_16m.cfg -c "cm7_0.hex verify; exit"
```

***Note**: The tool does not support debugging and should be used only for programming*

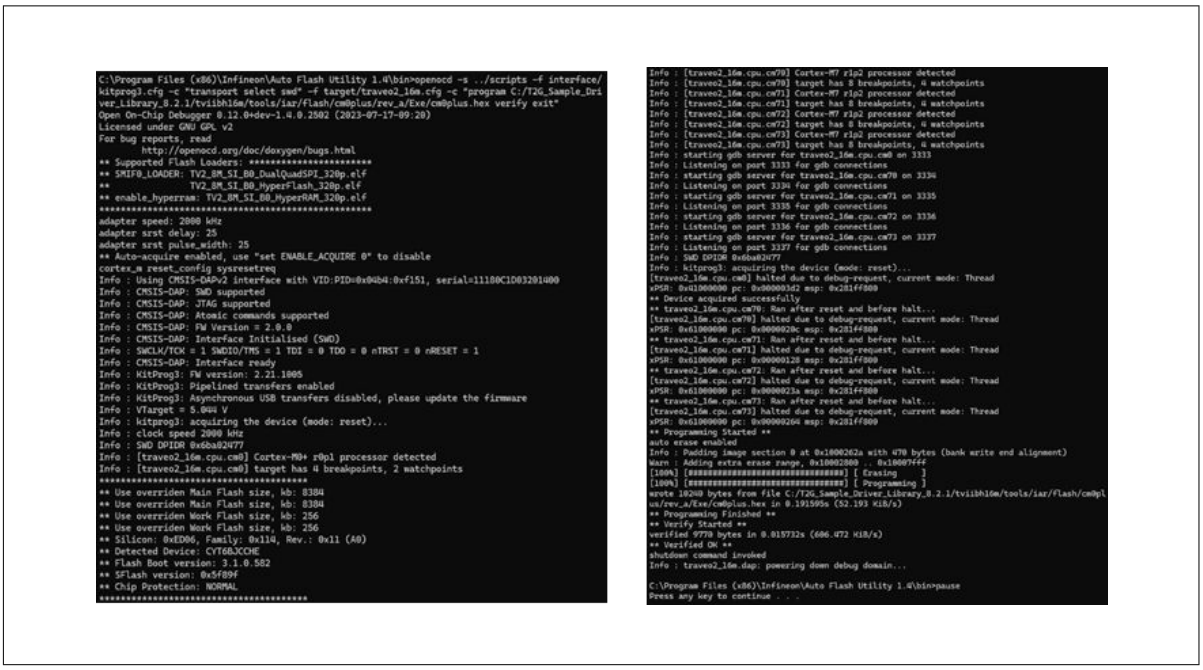

Figure 16 Running the commands in command prompt

2.4 Green Hills Software's MULTI® IDE

Green Hills Software's MULTI® Integrated Development Environment (IDE) is a professional-grade toolchain widely used for embedded software development on automotive-grade microcontrollers like Infineon's TRAVEO™ T2G Family.

2.4.1 Setting up the IDE

Open the `Readme.pdf` file available inside the SDL folder that was downloaded earlier and check for the GHS's Multi IDE, Compiler and Probe versions supported by the SDL, download and install the recommended versions from the GHS official website with GHS support and get the License and follow their `Readme.pdf` for setting up the IDE.

2.4.2 Compiling in GHS's MULTI IDE

1. Navigate to the path where you have installed the T2G SDL, and select the below path: `T2G_Sample_Driver_Library_8.2.1\ tviibh16m\ tools\ ghs` and double click **tviibh16m_rev_a_template**, it opens the MULTI IDE Project

2 Compilation and Programming the board

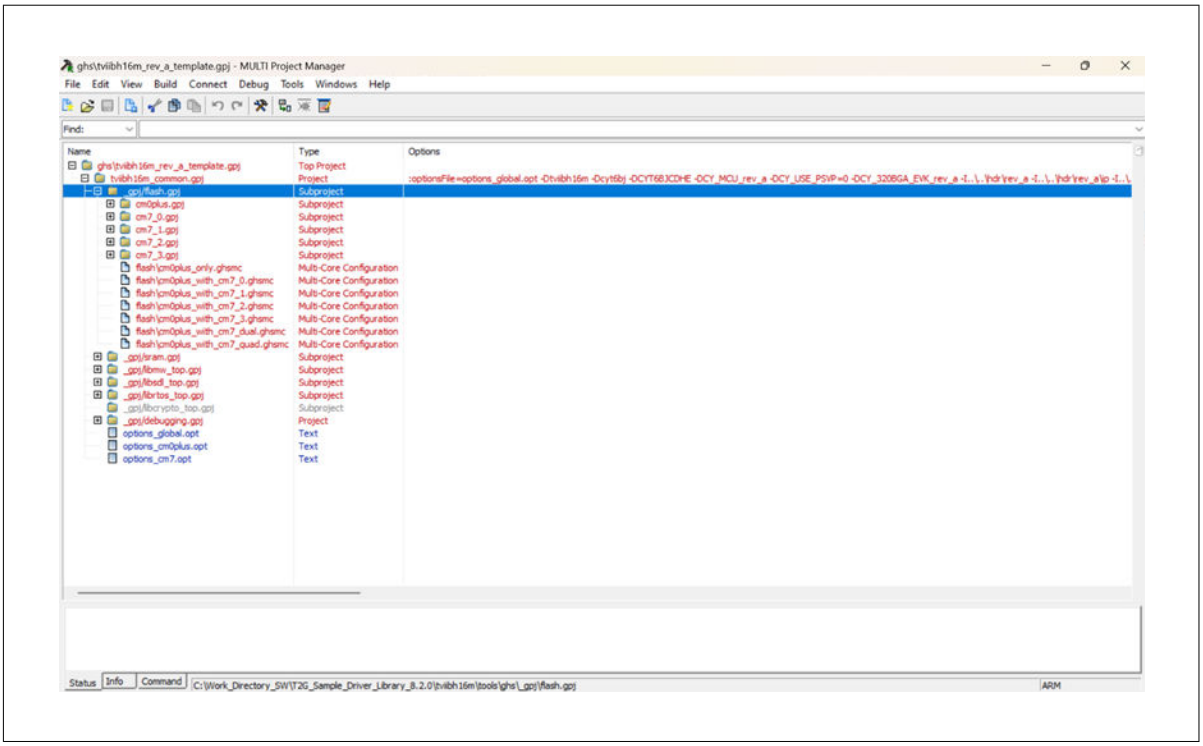

Figure 17 Opening the MULTI IDE Project

2. Now select the subproject you want to compile and click on Build icon in the toolbar to start compilation and build the project

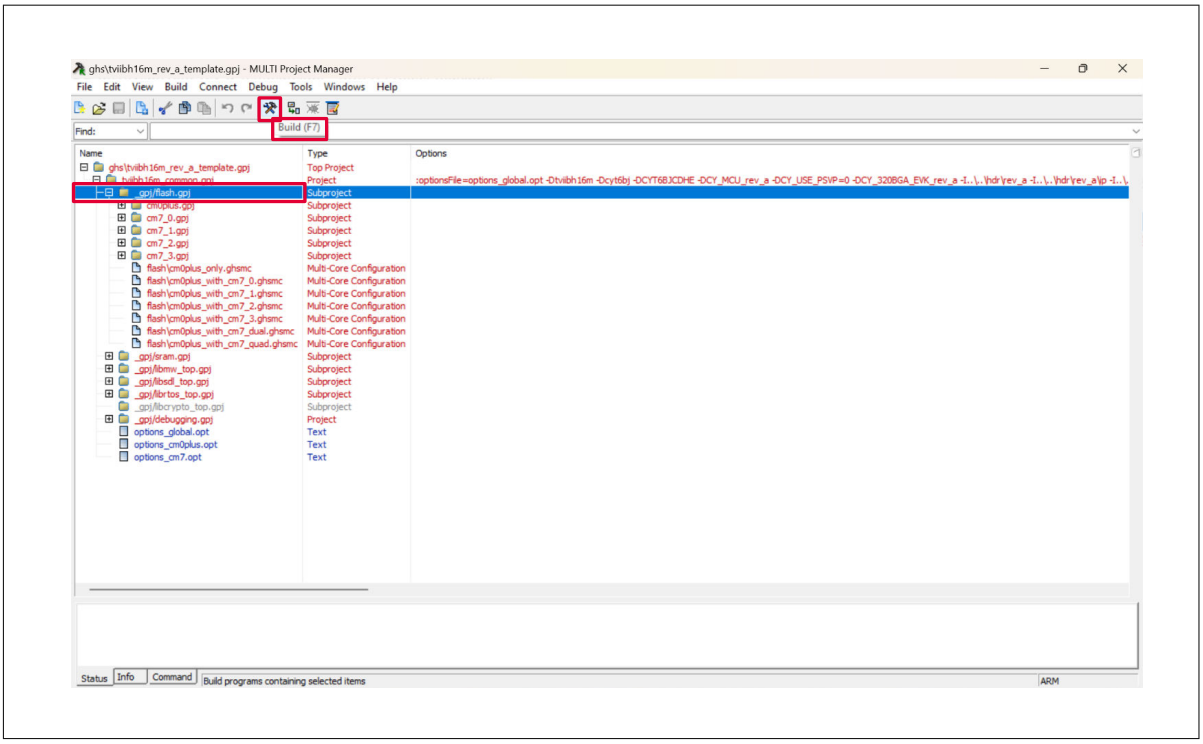

Figure 18 Building the project

3. Check for errors and warnings in the **Build Log** as the build process begins

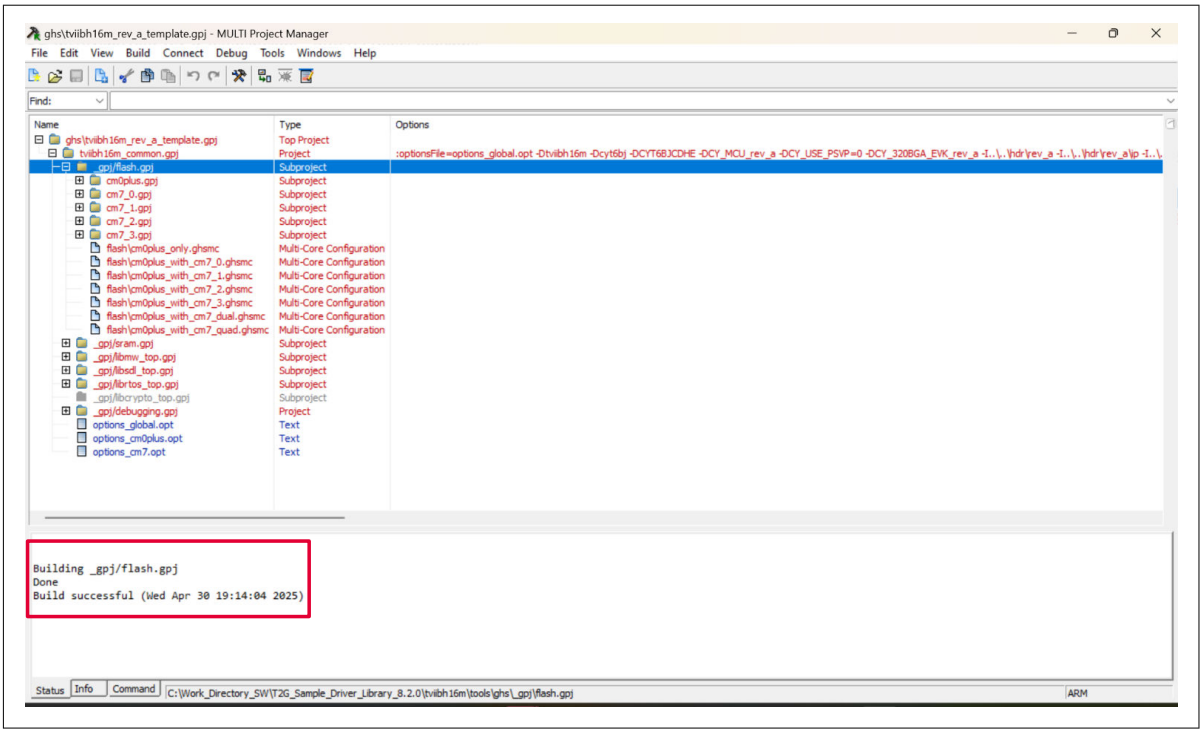

Figure 19 Checking for errors and warnings after build

2.4.3 Programming using GHS Tool

This section describes programming the TRAVEO™ T2G B-H-16M 320 CPU Evaluation Board using the Green Hills Software's debugger. Follow the below steps to program the kit using the GHS's MULTI IDE and the GHS debugger:

1. Refer to the section Powering up the board to power-up the kit
2. After powering up the kit, connect the GHS debugger to any of the debugging interfaces available on the board based on the type of converter you have. Refer section Program and Debug interface to know about various programming and debugging interfaces available on this board

2.4.3.1 Blink an LED

This section provides instructions on how to blink the user LEDs using GHS's MULTI IDE tool with the TRAVEO™ CYTVII-B-H-16M-320-CPU T2G Evaluation Board

1. To load the program to the flash region of CM0+ core, select the cm0plus Subproject and click on the **Debug** icon in the toolbar

2 Compilation and Programming the board

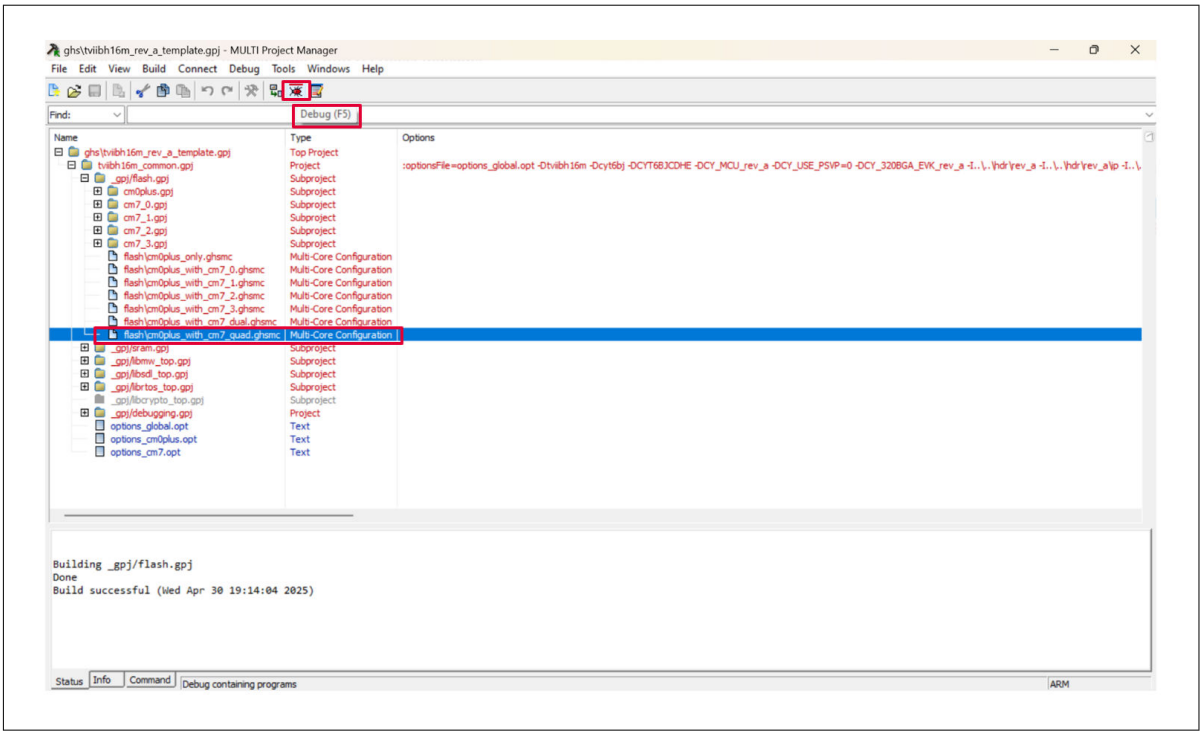

Figure 20 Selecting the Core for programming

2. Now select the **cm0plus.elf** and click on the **D** (Detect) icon in the toolbar

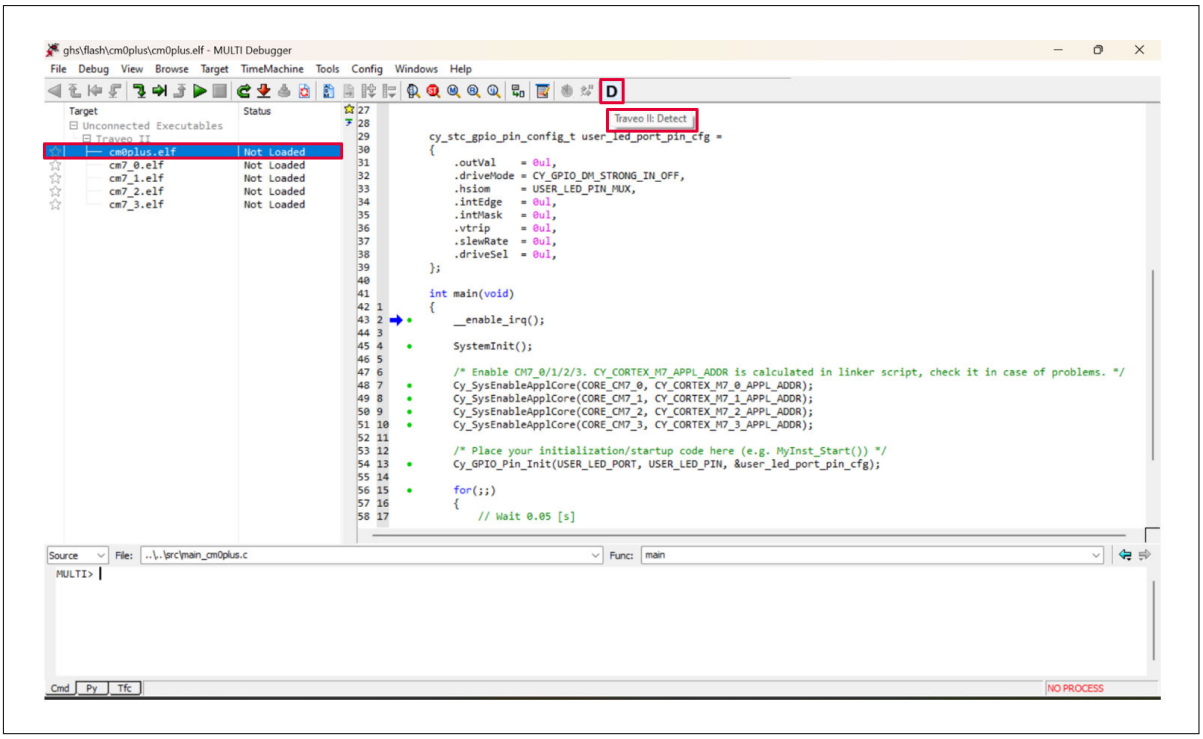

Figure 21 Selecting the cm0plus.elf for programming and creating the Debug environment

3. Once the debugger environment has been established by pressing the **D** button on the toolbar, you need to click on **F** button which connects to the target and flashes the application to internal Code Flash of cm0plus and starts the debugging session

2 Compilation and Programming the board

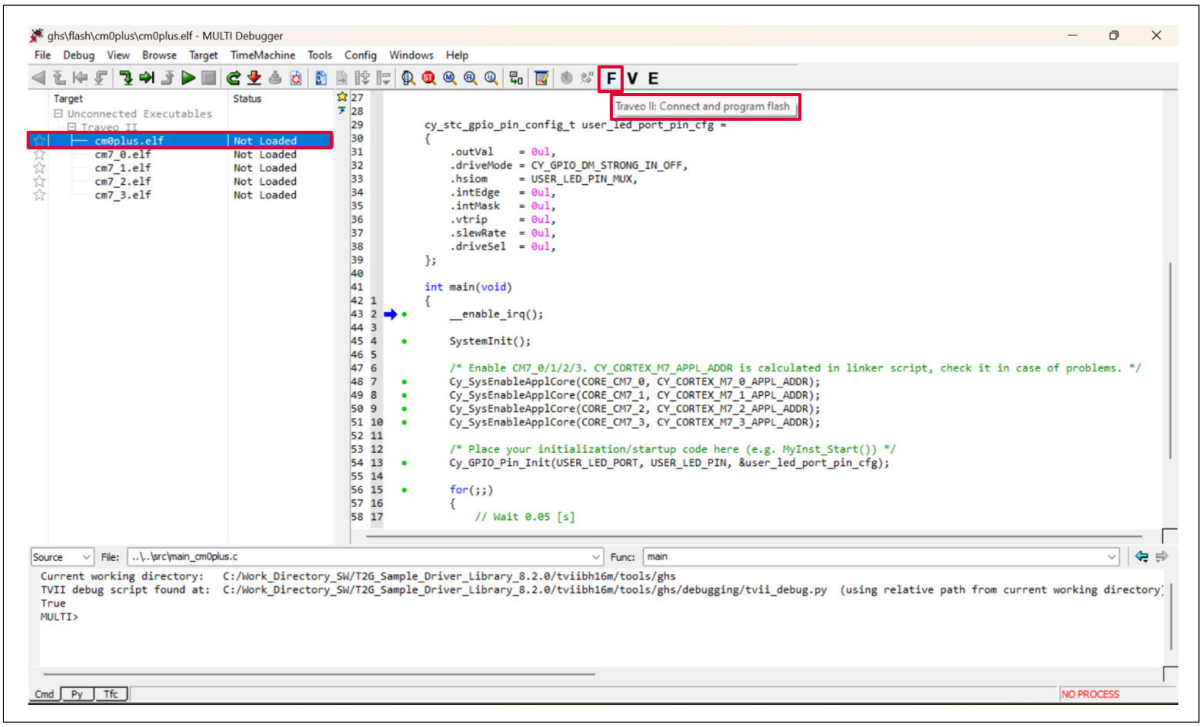

Figure 22 Flashing the application to internal Code Flash of cm0plus

4. Now use the debugging arrows to perform step over and step into or press the Resume button to free run

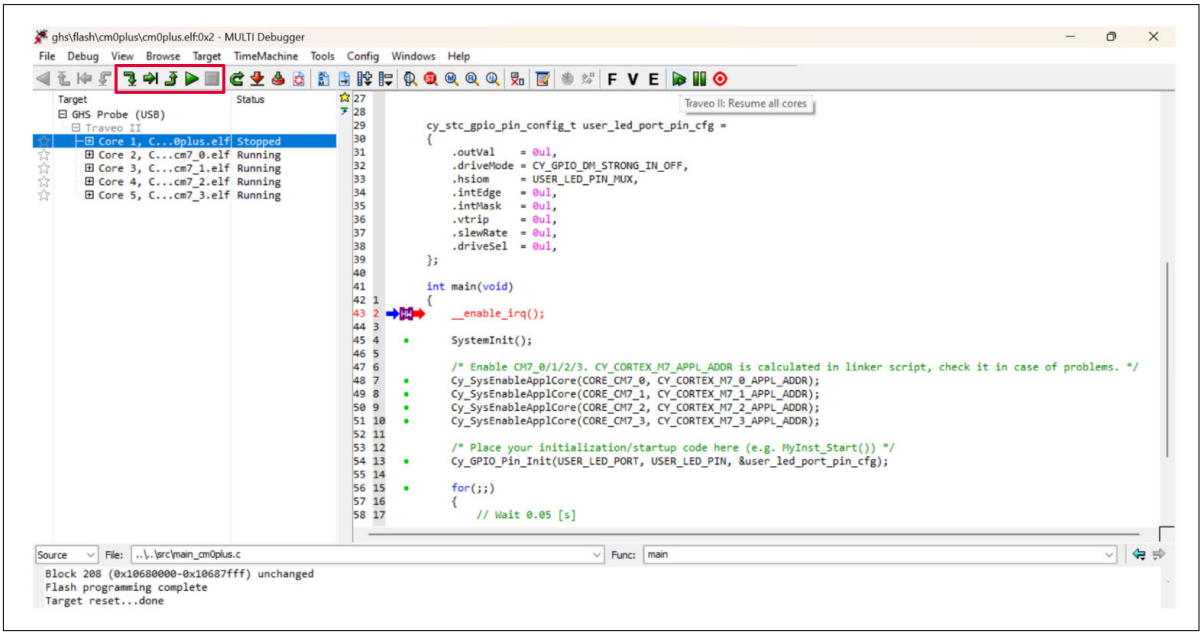

Figure 23 Debugging session started

5. In free-running execution, user LEDs will start blinking on the board

3 Functional description

This section provides information about the major hardware blocks included in the TRAVEO™ CYTVII-B-H-16M-320-CPU T2G Evaluation Board. This section helps in understanding the capabilities and features of the kit.

3.1 TRAVEO™ T2G CYT6BJ MCU

The TRAVEO™ T2G B-H-16M 320 CPU Evaluation Board is specifically designed to evaluate the various features and functionality of the TRAVEO™ T2G CYT6BJ device, which is a high-performance microcontroller that is targeted at automotive systems such as high-end body-control units. These devices include a range of embedded peripherals that support various communication protocols such as controller area network with flexible data rate (CAN FD), local interconnect network (LIN), Gigabit Ethernet, and Flex Ray.

Functionality	Supported on TRAVEO™ T2G B-H Lite kit
Flex Ray	Supported
Ethernet	Supported
CAN FD	Supported
LIN	Supported
UART	Supported
I2C	Supported
SPI	Supported
ADC	Supported
DMA	Supported
RTC	Supported
TCPWM	Supported
SMIF	Supported
IO	Supported
SDHC	Supported
CRYPTO	Supported
I2S	Supported

3.2 Power supply

This section provides a detailed information about the power supply and power flow in the TRAVEO™ T2G B-H Evaluation Board, including how power is generated and fed to the TRAVEO™ T2G B-H MCU and various components and peripherals in the board. We must use 12 V DC Power Adaptor to power up the board.

Jumper	Position	Function
J17	Short	1.1 V power to MCU (CPU_VCCD)
J18	Short	PMIC 1V1 Out
J19	1 – 2: short	5 V power to MCU (CPU_VDDIO1)
J20	1 – 2: short	5 V power to MCU (CPU_VDDD)
J21	1 – 2: short	5 V power to MCU (CPU_VDDA/CPU_VDDIO2)

3 Functional description

Jumper	Position	Function
J22	Short	3.3 V power to MCU (CPU_VDDA/CPU_VDDIO4)
J23	Short	3.3 V power to MCU (CPU_VDDIO3)
J43	Short	UART TX (Used for preprogrammed firmware)
J44	Short	UART RX (Used for preprogrammed firmware)

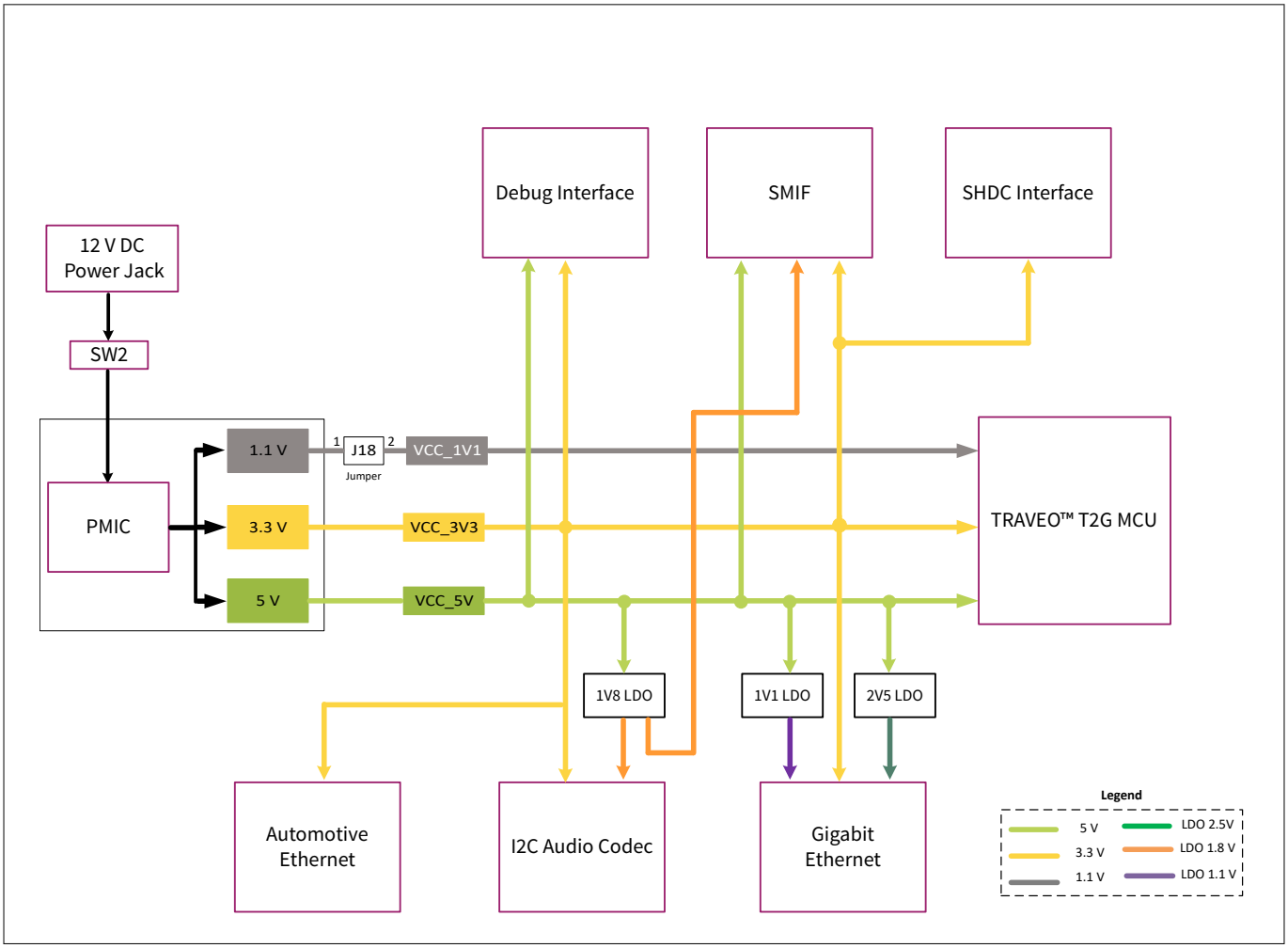

Figure 24 **Block diagram of power supply to the TRAVEO™ T2G B-H-16M 320 CPU Evaluation Board**

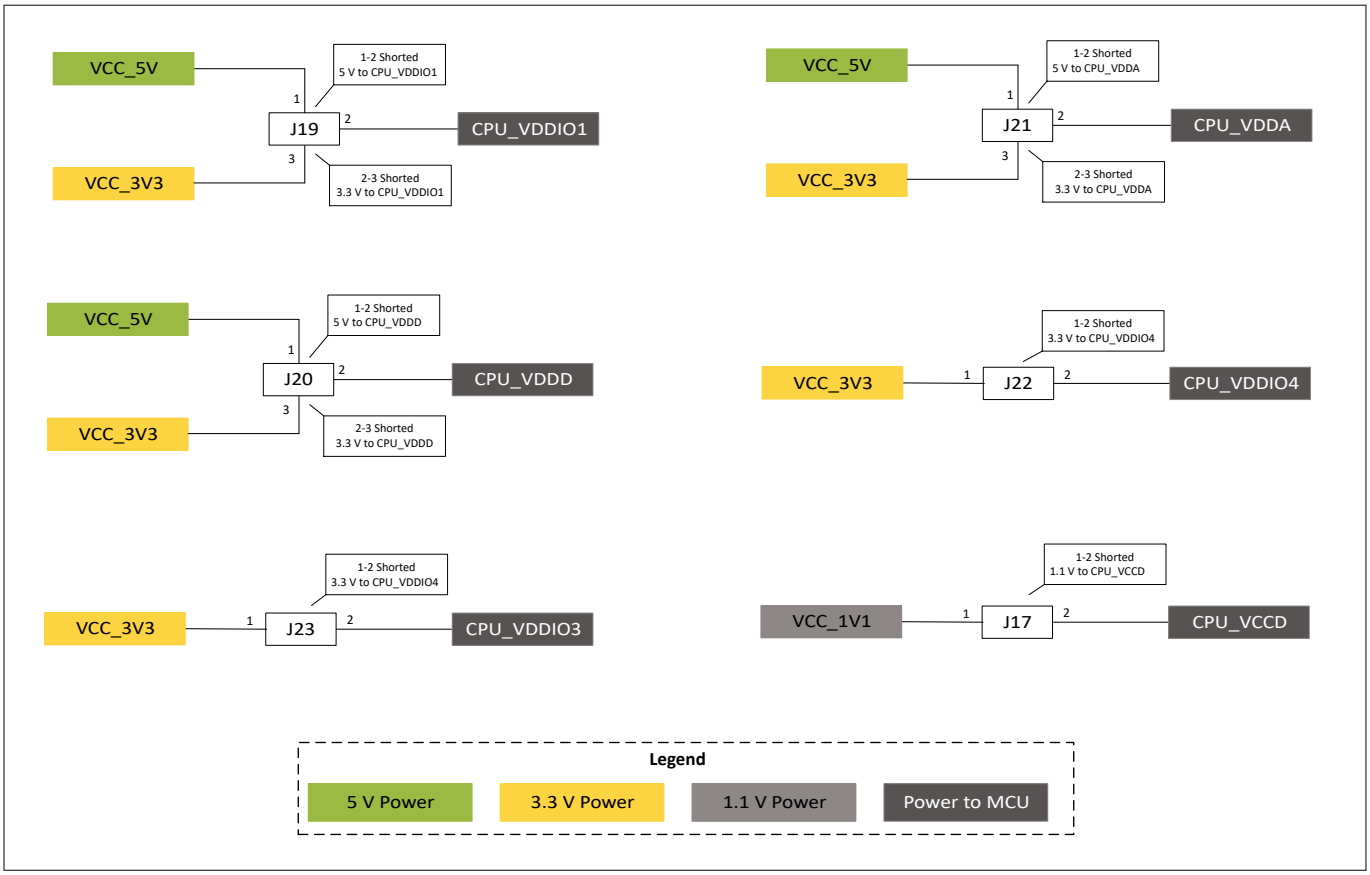

Figure 25 Block diagram of various power generation in the TRAVEO™ T2G B-H-16M 320 CPU Evaluation Board

3.3 PMIC

The PMIC module board consists of S6BP501A power management IC, S6BP501A is a three-channel output power management IC. This IC includes one high voltage buck DC/DC controller (DD3V), one buck DC/DC converter with built-in FETs (DD1V) and one boost DC/DC converter with built-in FETs (DD5V). This board provides 1.1 V, 3.3 V and 5 V DC.

3 Functional description

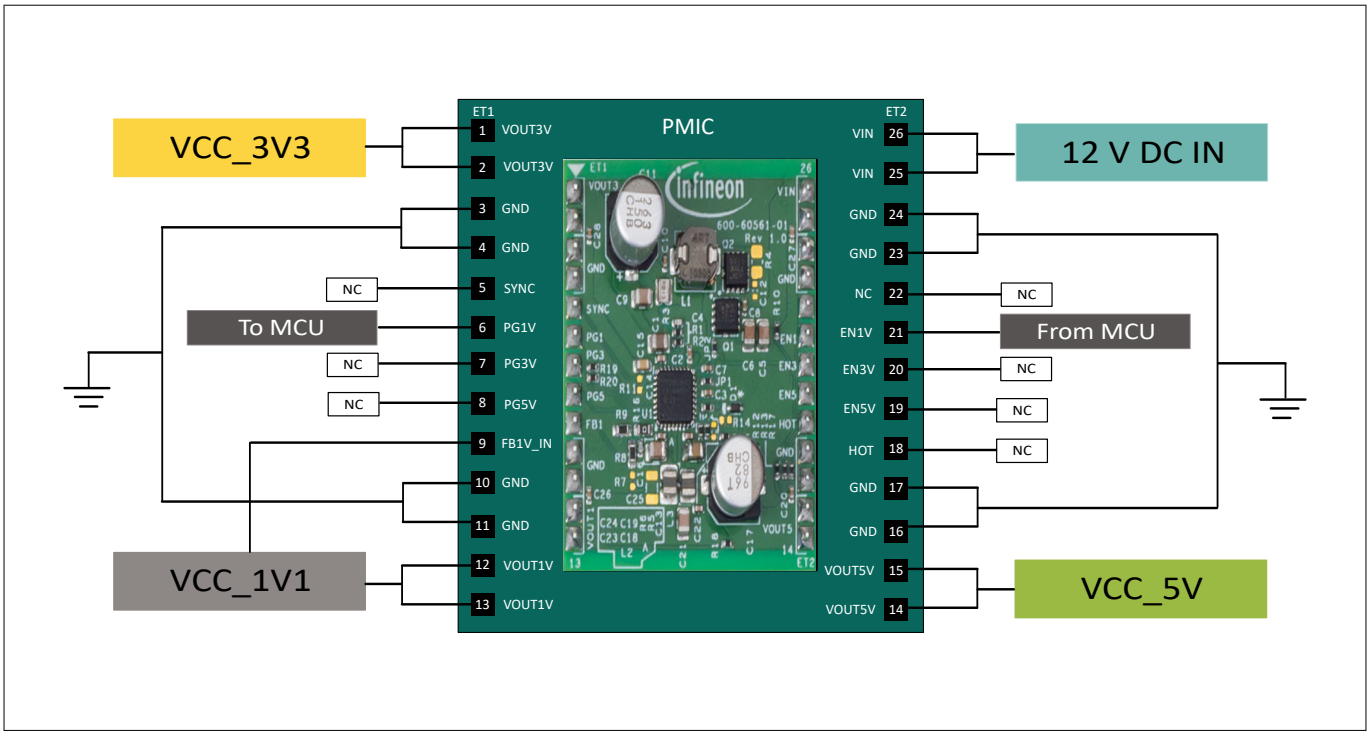

Figure 26 **Block diagram of PMIC module board of TRAVEO™ T2G B-H-16M 320 CPU Evaluation Board**

Pin no	Pin name	I/O	Description
1	VOUT3V	O	Voltage output pin for 3 V
2	VOUT3V	O	Voltage output pin for 3 V
3	GND	-	Ground pin
4	GND	-	Ground pin
5	SYNC	I	External clock input/SYNC function setting pin
6	PG1V	O	Power good output pin for 1 V
7	PG3V	O	Power good output pin for 3 V
8	PG5V	O	Power good output pin for 5 V
9	FB1V_IN	I	Feedback pin for 1 V output voltage
10	GND	-	Ground pin
11	GND	-	Ground pin
12	VOUT1V	O	Voltage output pin for 1 V
13	VOUT1V	O	Voltage output pin for 1 V
14	VOUT5V	O	Voltage output pin for 5 V
15	VOUT5V	O	Voltage output pin for 5 V
16	GND	-	Ground pin
17	GND	-	Ground pin
18	HOT	O	Power good output pin for thermal warning indicator
19	EN5V	I	Enable pin for 5 V

Pin no	Pin name	I/O	Description
20	EN3V	I	Enable pin for 3 V
21	EN1V	I	Enable pin for 1 V
22	NC	-	No Connection
23	GND	-	Ground pin
24	GND	-	Ground pin
25	VIN	I	Power supply pin
26	VIN	I	Power supply pin

3.4 Clock

This section provides information about the various external clock sources available on the TRAVEO™ CYTVII-B-H-16M-320-CPU T2G Evaluation Board that are used for clocking the TRAVEO™ T2G B-H MCU and other peripherals.

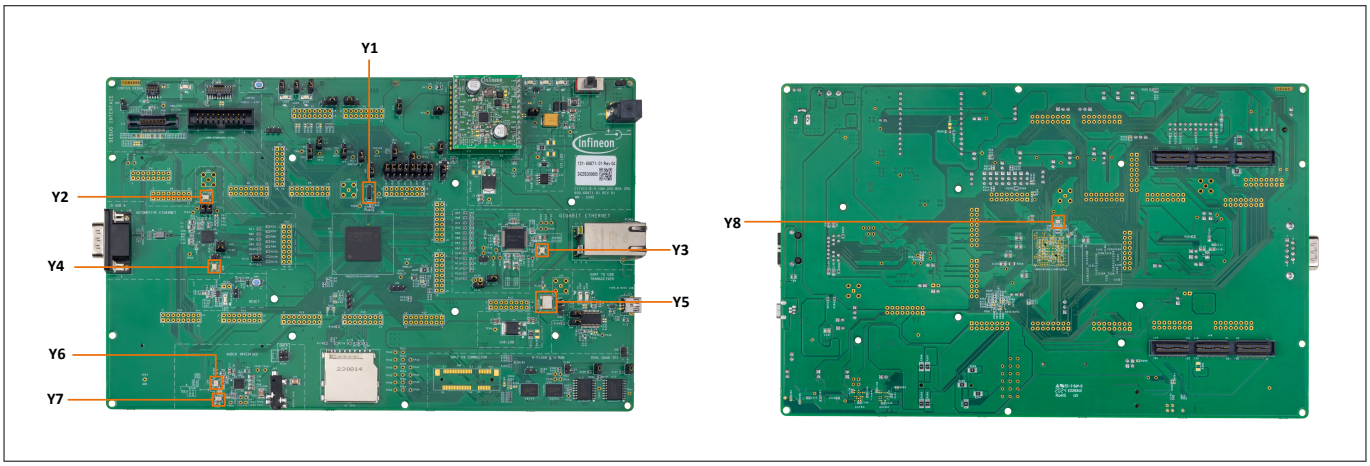

Figure 27 Crystal Oscillators position in the TRAVEO™ T2G B-H-16M 320 CPU Evaluation Board

Reference designator	Frequency	Purpose
Y1	32.768 KHz	The WCO is a low-power, watch-crystal oscillator intended for real-time-clock applications. The WCO can be configured as a clock reference for CLK_LF, which is the clock source for the MCWDT and RTC.
Y8	16 MHz	Primary external oscillator for ECU, it provides high-frequency clocking, connected to the ECO_IN and ECO_OUT pins of the ECU.
Y5	125 MHz	125 MHz reference clock option for gigabit ethernet PHY (DP83867IR) in GMII/RGMII mode
Y3	25 MHz	Clock signal generation for gigabit ethernet PHY (DP83867IR)
Y2	25 MHz	Clock signal generation for automotive ethernet PHY (TJA1101BHN/0Z)
Y4	50 MHz	
Y6	12 MHz	Clock signal generation for audio codec (TLV320AIC26IRHBR)
Y7	24.576 MHz	

3.5 Reset

This section describes to reset the TRAVEO™ CYTVII-B-H-16M-320-CPU T2G Evaluation Board MCU using the reset button (SW3). The reset button (SW3) is specifically designed to reset the TRAVEO™ CYTVII-B-H-16M-320-CPU T2G Evaluation Board MCU and is connected to the XRES_L pin of the MCU via jumper J39.

To reset the TRAVEO™ CYTVII-B-H-16M-320-CPU T2G Evaluation Board MCU, simply press and release the reset button once, which will initiate the reset process

User interface	Reference designator	MCU	
		Pin number	Port pin
Reset button	SW3	K20	XRES_L

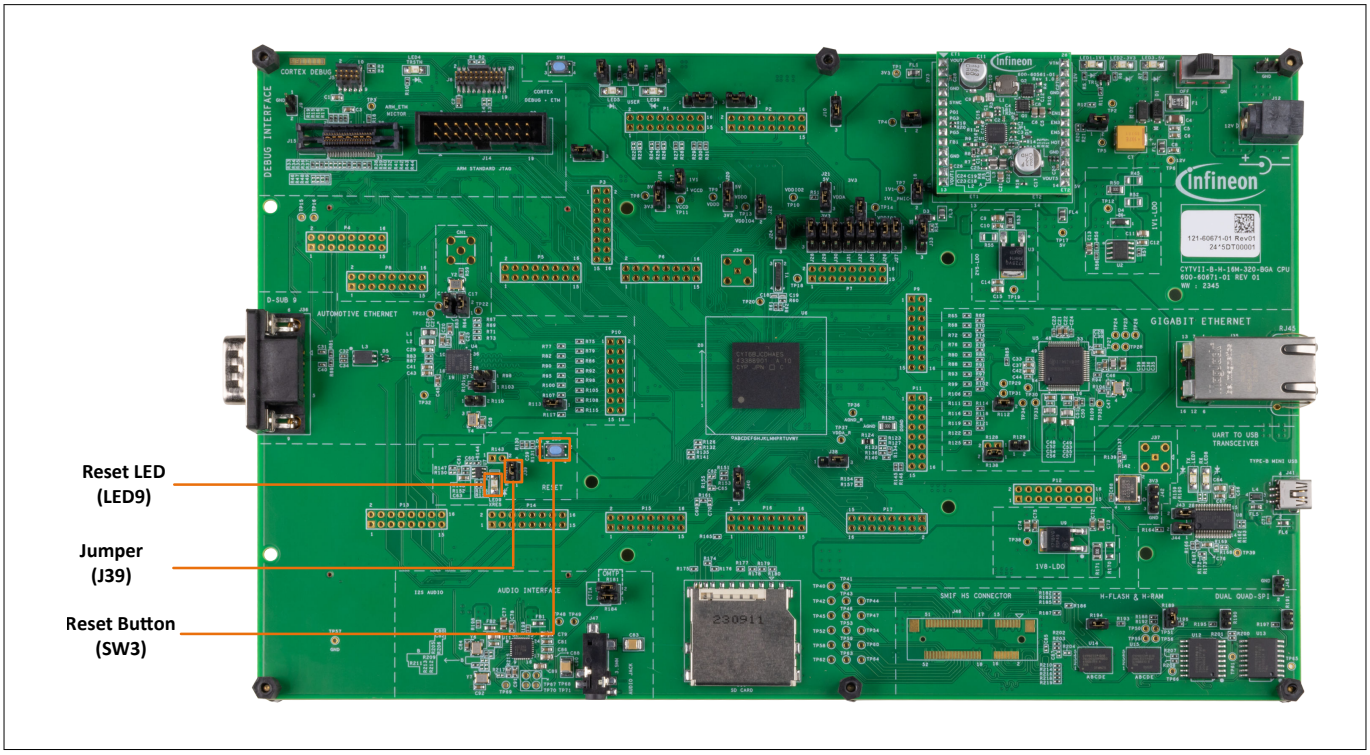

Figure 28 Block diagram of Reset controller of TRAVEO™ T2G B-H-16M 320 CPU Evaluation Board

3.6 User Interfaces

The TRAVEO™ CYTVII-B-H-16M-320-CPU T2G Evaluation Board is designed to provide developers and testers with a range of interactive features, enabling them to effectively utilize the board for various operations and tests.

These features include two user-configurable LEDs and a push button, which facilitate user interaction and enhance the overall development and testing experience

3.6.1 User LEDs

The TRAVEO™ CYTVII-B-H-16M-320-CPU T2G Evaluation Board has two user LEDs which function as active high. Each LED has a jumper which are default closed.

User interface	Reference designator	MCU	
		Pin number	Port pin
User LED 1	LED5	A18	P0_0

User interface	Reference designator	MCU	
		Pin number	Port pin
User LED 2	LED6	E20	P23_2

3.6.2 User Push buttons

The user push button on the TRAVEO™ CYTVII-B-H-16M-320-CPU T2G Evaluation Board provides a means of input to the TRAVEO™ T2G B-H MCU via a 2-pin jumper. By default, this button connects the TRAVEO™ T2G B-H MCU pin to ground when pressed.

Therefore, to detect the button press, you need to configure the TRAVEO™ T2G B-H MCU pin as a digital input with resistive pull-up.

User interface	Reference designator	MCU	
		Pin number	Port pin
User push button	SW 1	K19	P21_4

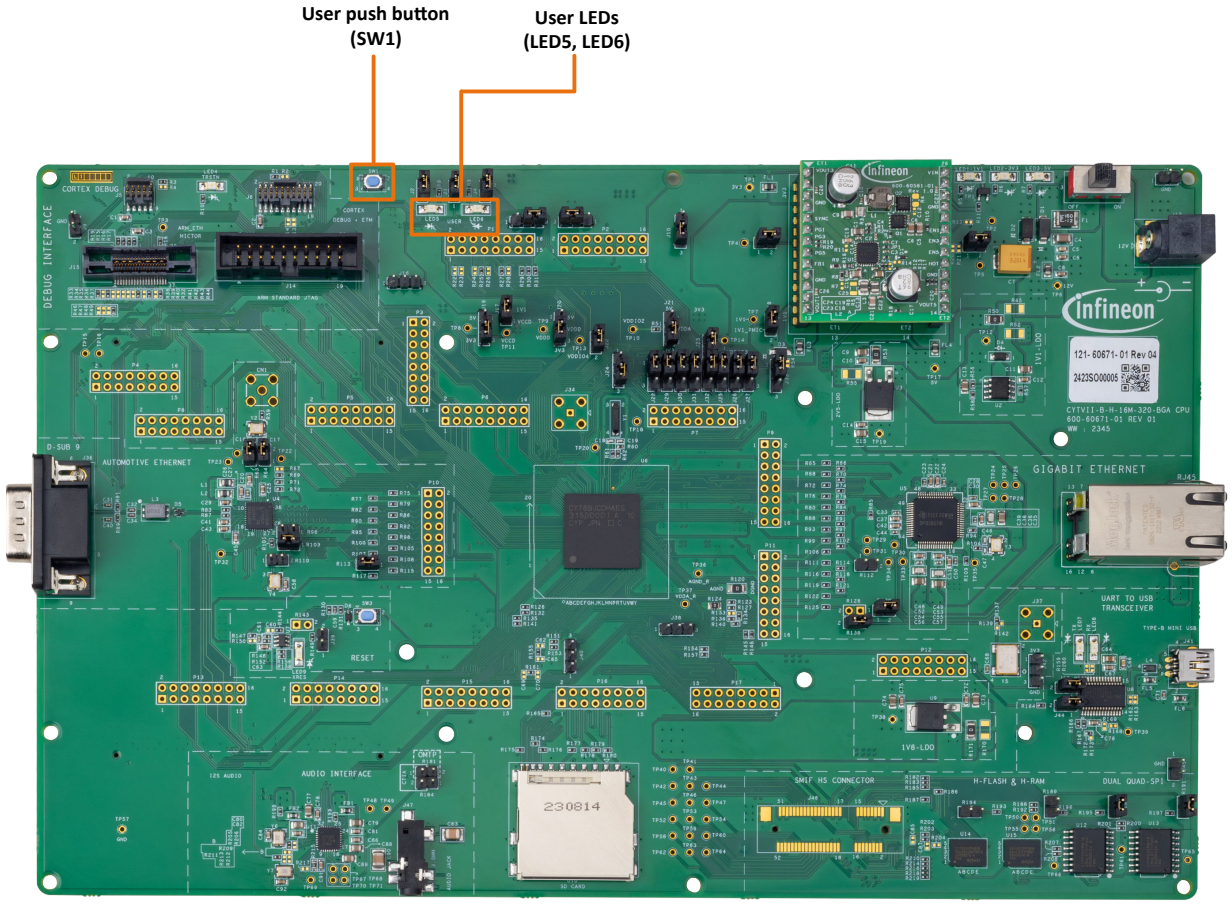

Figure 29 Position of various user interfaces available

3.7 Communication Interfaces

The TRAVEO™ CYTVII-B-H-16M-320-CPU T2G Evaluation Board provides a range of high-speed communication interfaces. These interfaces include CAN FD, LIN, FLEXRAY, Automotive Ethernet and Gigabit Ethernet. These can be used for a variety of purposes, such as connecting to external devices or communicating with other systems.

For using these interfaces, the TRAVEO™ CYTVII-B-H-16M-320-CPU T2G Evaluation Board should be connected to an extension board or a base board which has a several transceivers and multiple channels for all these communication interfaces.

3.7.1 UART to USB Transceiver

The TRAVEO™ CYTVII-B-H-16M-320-CPU T2G Evaluation Board features a UART to USB transceiver interface, which enables communication between the board's UART interface and a USB host device. This interface is implemented using Infineon's CY7C65213-28PVXI USB-UART bridge controller. SCB3 is configured as UART. Type B mini USB is used to connect to the host and LED7 and LED8 glow during transmission and receiving respectfully.

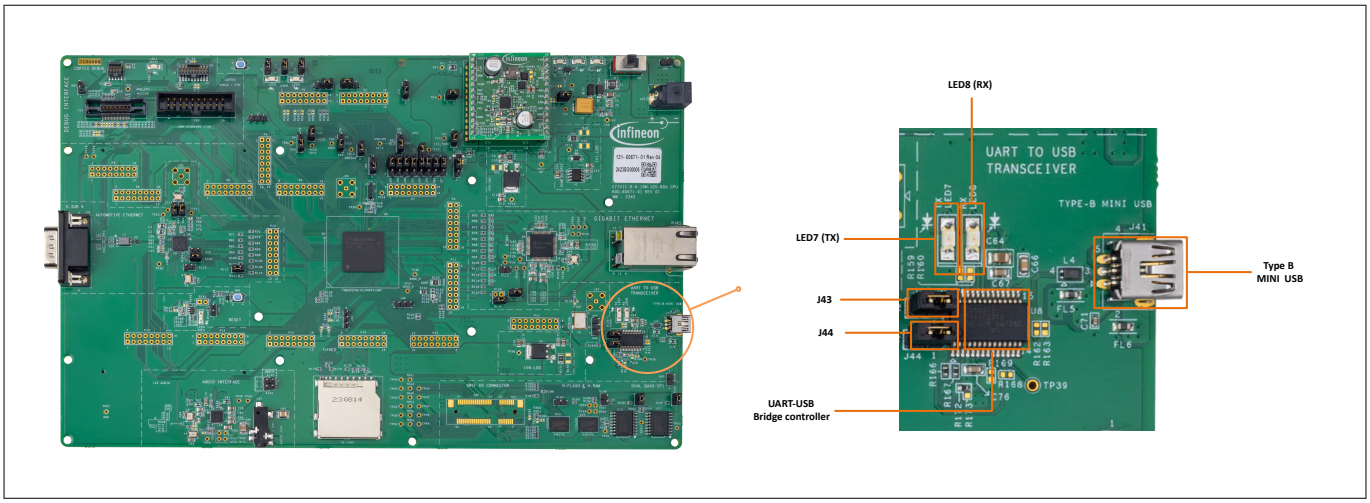

Figure 30 UART to USB Transceiver interface

Function	Jumper	Port and pin
UART_TX	J43 (2-3)	GPIO_13_1
UART_RX	J44 (2-3)	GPIO_13_0

3.7.2 CAN FD

The CYT6BJ of TRAVEO™ CYTVII-B-H-16M-320-CPU T2G Evaluation Board features advanced CAN FD (Flexible Data Rate) capabilities. This device includes Two independent CAN FD controller blocks, each block supports up to five CAN FD channels, enabling a total of 10 configurable CAN FD nodes.

The on-chip CAN FD controllers provide only the protocol layer, external physical transceivers are required to interface with the actual CAN bus lines. As such, the evaluation board must be used in conjunction with a base board, connected through board-to-board connectors as shown in Figure 31.

This base board has TJA1057GT transceivers for 6 channels and TJA1145T transceivers for other 4 channels and are routed to D-SUB DB 9 connectors.

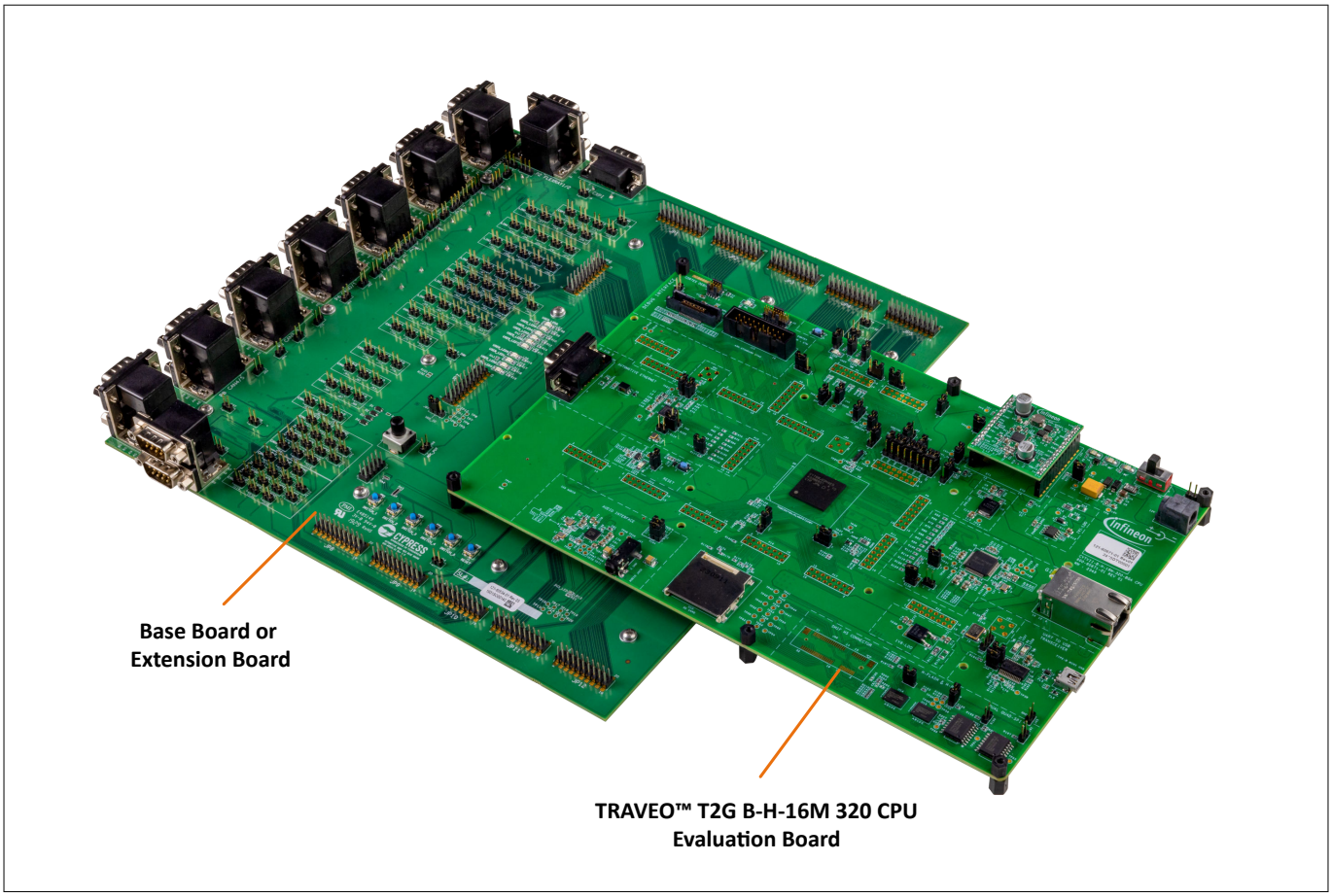

Figure 31 TRAVEO™ CYTVII-B-H-16M-320-CPU T2G Evaluation Board connected to the Base Board

CAN instance number on Base board	Jumpers on the Base Board to be connected	CAN channel from MCU
CAN0	J70, J71, J72	CAN1.4
CAN1	J66, J67, J68	CAN1.3
CAN2	J81, J82, J83	CAN0.2
CAN3	J76, J77, J78	CAN1.0
CAN4	J91, J92, J93	CAN1.2
CAN6	J94, J109, J110	CAN1.1

3.7.3 LIN

The CYT6BJ of TRAVEO™ CYTVII-B-H-16M-320-CPU T2G Evaluation Board contains up to 20 LIN blocks. Each block supports transmission/reception of data.

To use LIN in this board, an external transceiver is required, so the TRAVEO™ CYTVII-B-H-16M-320-CPU T2G Evaluation Board must be connected to a base board using board to board connectors as shown in Figure 31. This base board has up to six TJA1021T/20/C transceivers routed to D-SUB DB 9 connectors. Each LIN block connects to an external transceiver and supports master and slave functionality.

LIN instance number on Base Board	Jumpers on the Base Board to be connected	LIN channel from MCU
LIN0	J58, J59, J60, J63	LIN0

LIN instance number on Base Board	Jumpers on the Base Board to be connected	LIN channel from MCU
LIN1	J51, J52, J53, J56	LIN6
LIN2	J37, J39, J40, J43	LIN8
LIN3	J30, J31, J32, J35	LIN7
LIN4	J22, J23, J24, J27	LIN10
LIN5	J10, J16, J17, J20	LIN5

3.7.4 FLEXRAY

The CYT6BJ of TRAVEO™ CYTVII-B-H-16M-320-CPU T2G Evaluation Board supports one Flex Ray interface with channel A and an optional channel B and supports up to a 10-Mbps data rate.

To use FLEXRAY in this board, an external transceiver is required, so the TRAVEO™ CYTVII-B-H-16M-320-CPU T2G Evaluation Board must be connected to a base board using board to board connectors as shown in Figure 31. This base board has two TJA1081TS FLEXRAY transceivers routed to D-SUB DB 9 connectors.

FLEXRAY instance number on Base Board	Jumpers on the Base Board to be connected	FLEXRAY channel from MCU
FLEXRAY1	J7 (Short 1-2)	FLEXRAY_A
FLEXRAY2	J8 (Short 1-2)	FLEXRAY_B

3.7.5 Ethernet

The TRAVEO™ CYTVII-B-H-16M-320-CPU T2G Evaluation Board supports dual-channel Ethernet communication via the integrated CYT6BJ microcontroller, providing robust and reliable connectivity for automotive applications. Each Ethernet channel supports 10 Mbps, 100 Mbps and 1000 Mbps transfer rates, and can operate in either half-duplex or full-duplex modes using external PHY devices. This ensures flexible configuration for different network topologies and application requirements.

3.7.5.1 Automotive Ethernet

To enable Automotive Ethernet functionality, the board utilizes an external PHY transceiverTJA1101BHN/0Z from NXP. This PHY is IEEE 802.3 compliant and supports both MII (Media Independent Interface) and RMII (Reduced Media Independent Interface) communication standards, making it compatible with a variety of MAC controller configurations.

Clock generation for the PHY is handled via two dedicated crystal oscillatorsY2 and Y4 which provide the required reference clocks for the Ethernet transceivers. The board design supports flexible clocking configurations depending on PHY mode and clock options.

The transmit and receive signal lines from the PHY are routed to a D-Sub DB-9 connector, which enables straightforward interfacing with external automotive Ethernet tools or peer devices.

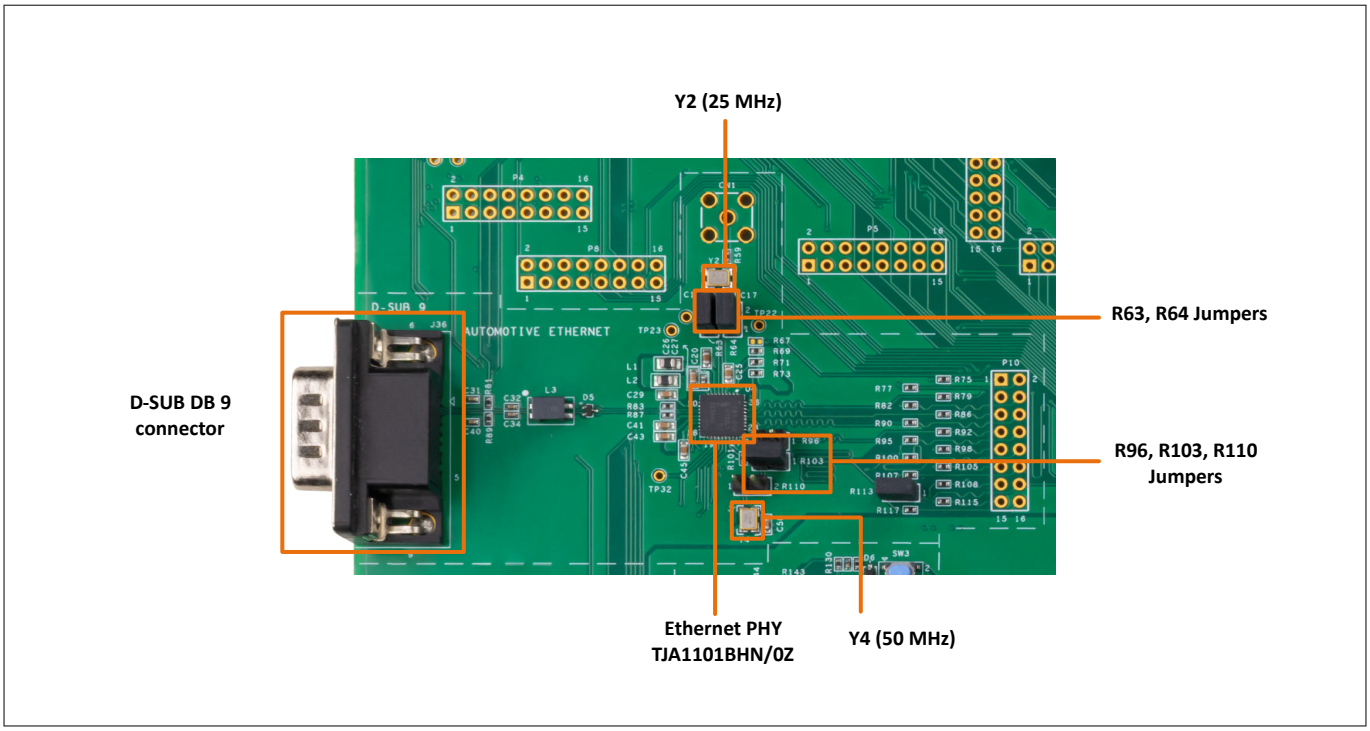

Figure 32 Automotive Ethernet interface in TRAVEO™ T2G B-H-16M 320 CPU Evaluation Board

3.7.5.2 Gigabit Ethernet

For Gigabit Ethernet communication, the board integrates the DP83867IR Gigabit Ethernet PHY from Texas Instruments, a highly configurable and automotive-qualified device that supports MII, RMII, GMII, and RGMII interfaces.The PHY is driven by a dedicated crystal oscillator (Y3), which provides a stable reference clock necessary for Ethernet timing. The board supports flexible clock input/output configurations, allowing the PHY to operate in any of the modes (MII, RMII, GMII, and RGMII). Can use 125 MHz reference clock option from Y5 crystal oscillator for GMII / RGMII mode.

The PHY's differential signal pairs (TX/RX) are routed to a RJ-45. Integrated PHY status LEDs on RJ-45 provide real-time feedback on link state and data transmission.

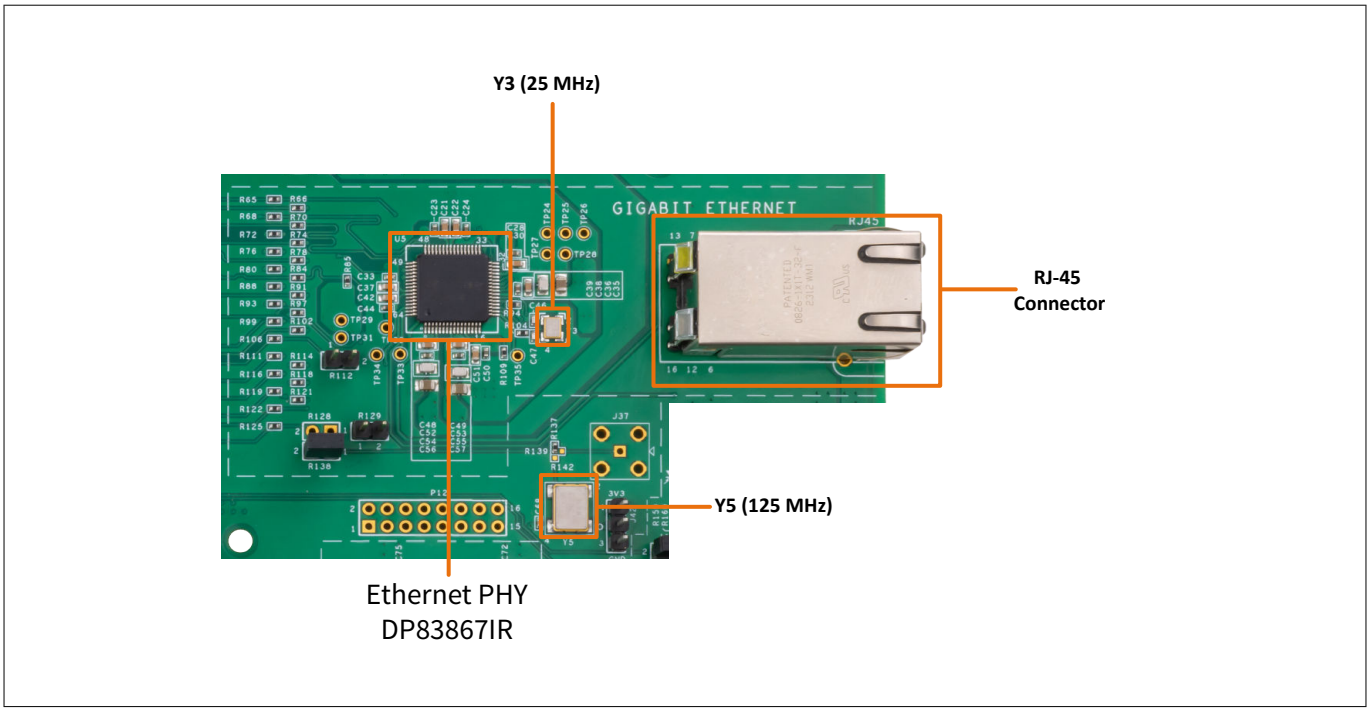

Figure 33 Gigabit Ethernet interface in TRAVEO™ T2G B-H-16M 320 CPU Evaluation Board

3.8 External Memory and interfaces

In addition to the internal flash memory, CYT6BJ supports direct connection to as much as 128-MB of external flash or RAM memory. This connection is made through either a HYPERBUS™ or serial peripheral interface (SPI).

HYPERBUS™ allows connection to Hyper flash and Hyper RAM devices, while SPI (single, dual, quad, or octal SPI) can connect with serial flash memory.

3.8.1 HYPERBUS™

3.8.1.1 H-Flash

The TRAVEO™ CYTVII-B-H-16M-320-CPU T2G Evaluation Board has Infineon's S26HL512 hyper flash which has 512 MB of memory and Hyperbus interface is used.

Chip select pin is connected via 0 ohm 2 pin jumper R189, so this jumper should be connected to drive the chip select pin high or low.

3.8.1.2 H-RAM

The TRAVEO™ CYTVII-B-H-16M-320-CPU T2G Evaluation Board has Infineon's S27KL0642 hyper DRAM which has 64 MB of memory and Hyperbus interface is used.

Chip select pin is connected via 0 ohm 2 pin jumper R194, so this jumper should be connected to drive the chip select pin high or low.

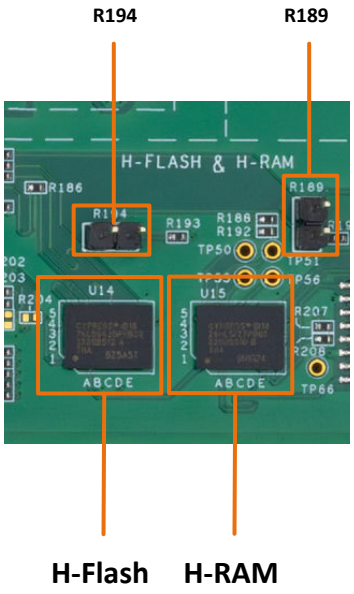

Figure 34 H-Flash and H-RAM in TRAVEO™ CYTVII-B-H-16M-320-CPU T2G Evaluation Board

3.8.2 Quad SPI

The TRAVEO™ CYTVII-B-H-16M-320-CPU T2G Evaluation Board has dual Infineon's S25HL512TFAMHB010 serial flash memory of 512 Mbit which are Quad SPI interfaced.

Chip select pins are connected via 0 ohm 2 pin jumpers R190 and R191, so these jumpers should be connected to drive the chip select pins high or low.

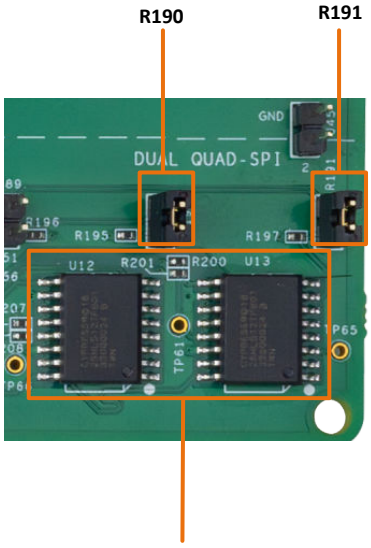

Figure 35 Dual QUAD-SPI in TRAVEO™ CYTVII-B-H-16M-320-CPU T2G Evaluation Board

3.8.3 SD/eMMC connector

The TRAVEO™ CYTVII-B-H-16M-320-CPU T2G Evaluation Board features an SD/eMMC (embedded Multimedia Card) socket, which provides a high-performance storage interface.

While using an SD card, simply insert the SD card into the socket, making sure to align the pins correctly.While using an eMMC device use eMMc to SD converter and simply insert the SD card side into the socket, making sure to align the pins correctly.

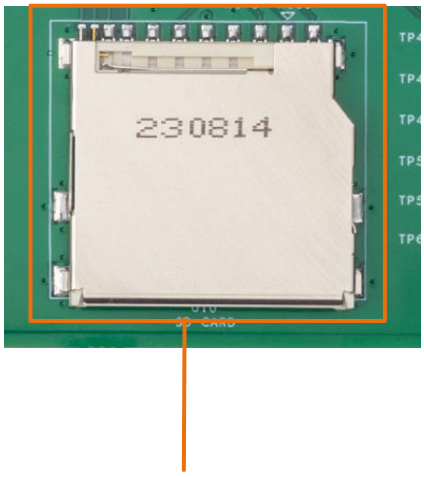

Figure 36 SD / eMMC Socket in TRAVEO™ T2G B-H-16M 320 CPU Evaluation Board

3.9 Audio Interface

The TRAVEO™ T2G B-H-16M 320 CPU Evaluation Board supports I2S Left Justified (LJ) and eight-channel Time Division Multiplexed (TDM) digital audio interface formats in both master and slave modes with independent operations in receive and transmit directions allowing for flexible configuration and control of the audio data transmission.

TLV320AIC26IRHBR Audio Codec is used in this board for audio conversion which uses I2S interface to transmit and receive audio data. Y7 (12 MHz) Oscillator is used to generate MCLK for CODEC.

It supports both OMTP and CTIA type of stereo jacks, so based on the type of stereo jack used we need to connect R181 and R184 jumpers as marked.

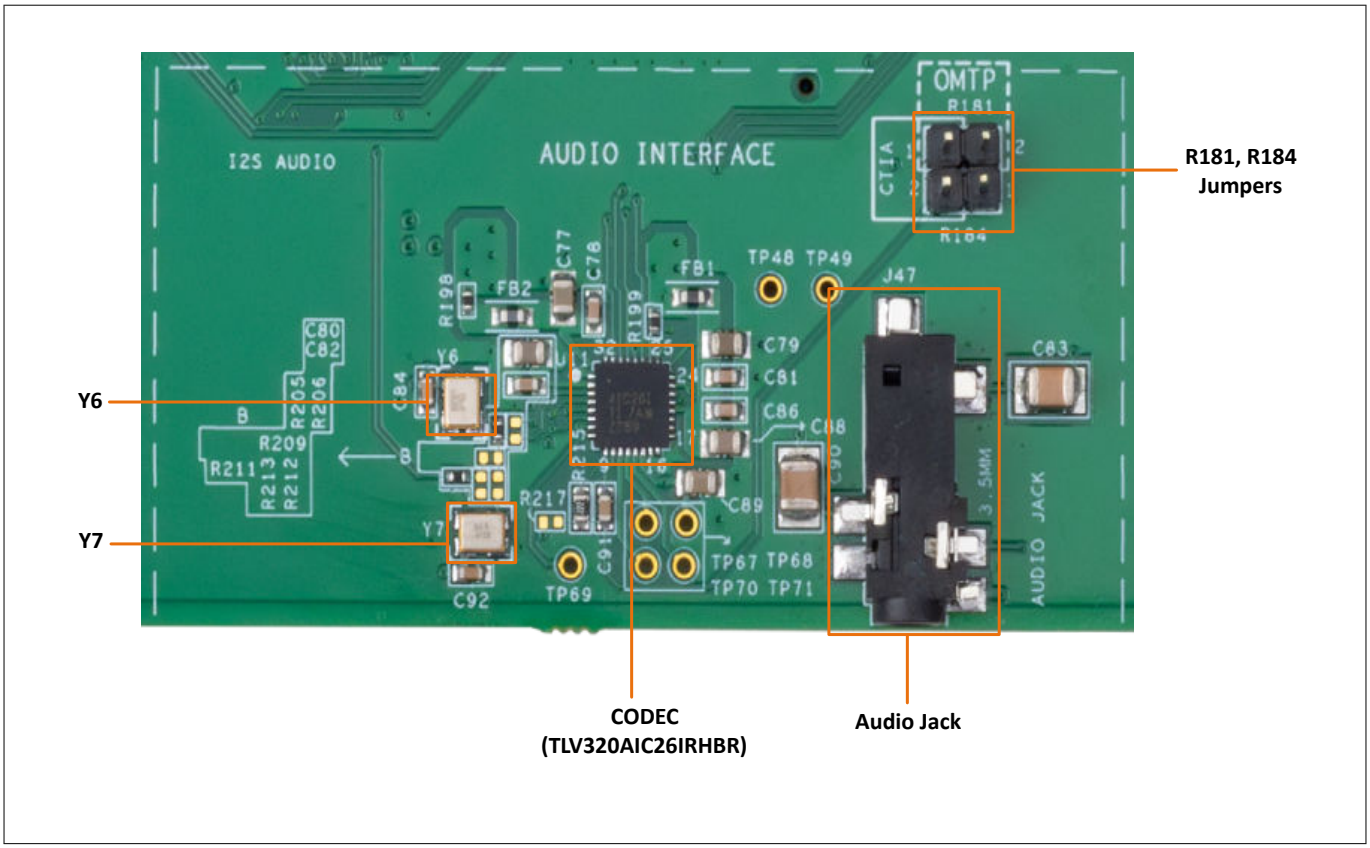

Figure 37 Audio interface in TRAVEO™ CYTVII-B-H-16M-320-CPU T2G Evaluation Board

3.10 Program and Debug interface

This section provides the information about the various programming/Debugging interfaces which are available in the TRAVEO™ CYTVII-B-H-16M-320-CPU T2G Evaluation Board.

The TRAVEO™ T2G B-H-16M 320 CPU Evaluation Board doesn't have an onboard programmer/debugger.

There are four programming/debugging interfaces that TRAVEO™ T2G B-H-16M 320 CPU Evaluation Board supports. It can be used to program and debug using an external programmer/debugger like I-JET, Miniprog4 or any suitable devices.

- Arm® standard 20-pin JTAG connector (J14)
- Cortex® Debug Connector (J5)
- Arm® ETM Mictor Connector (J15)
- Cortex® Debug + ETM Connector (J6)

3 Functional description

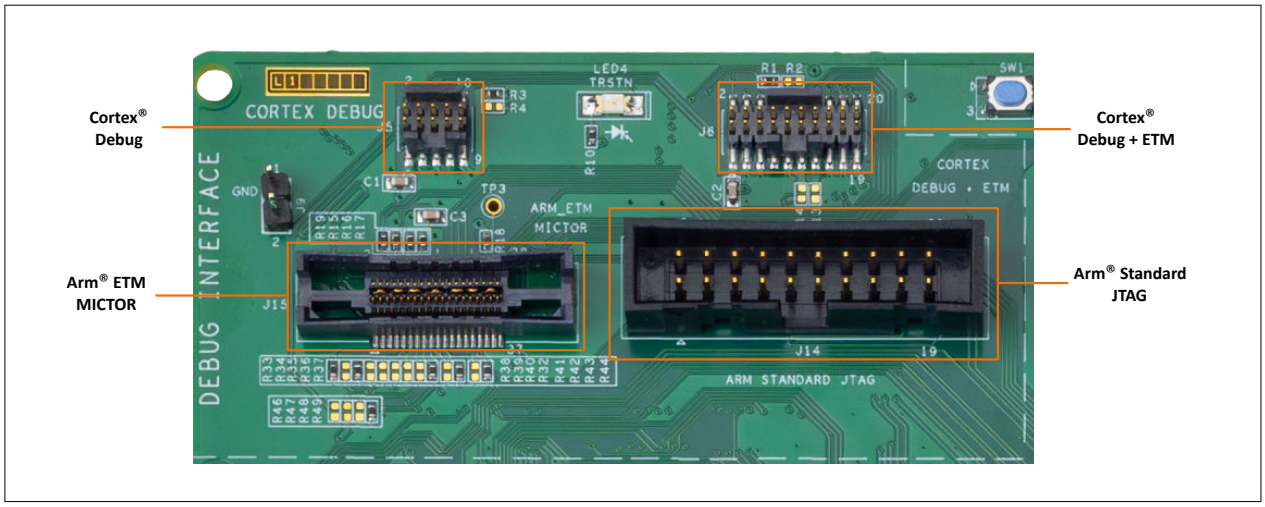

Figure 38 **Debug interfaces available in the TRAVEO™ T2G B-H-16M 320 CPU Evaluation Board**

4 Kit design documents

This section provides a detailed information on resources that can be used to understand the layout, design, and components of the TRAVEO™ T2G B-H-16M 320 CPU Evaluation Board. These resources include layout images, schematics, assembly drawings, bills of materials (BOM), and pin-out details, which can be used to build a deeper understanding of how the kit is put together and how it can be used.

4.1 Board Image

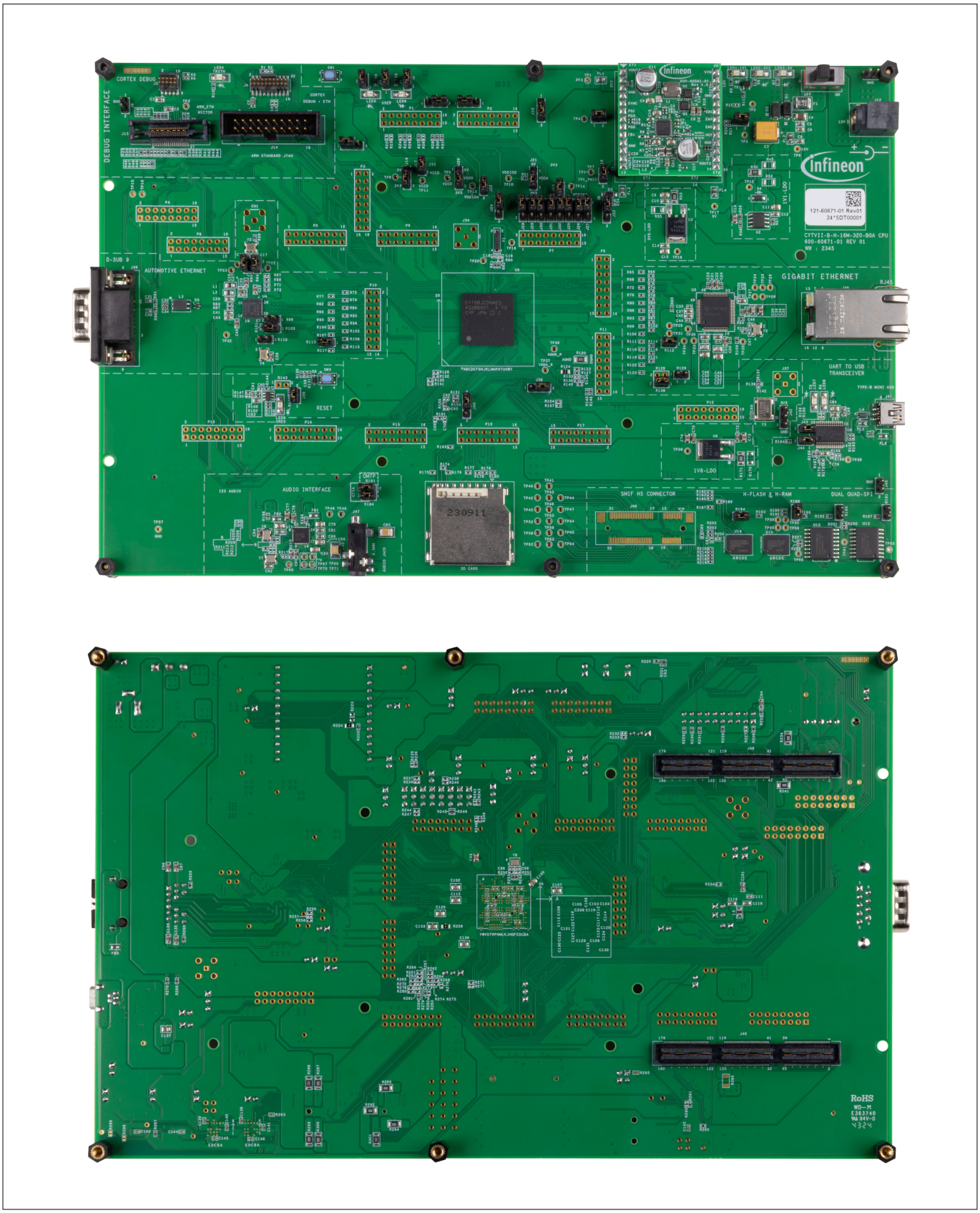

Figure 39 TRAVEO™ CYTVII-B-H-16M-320-CPU T2G Evaluation Board Images

4.2 Schematic diagrams

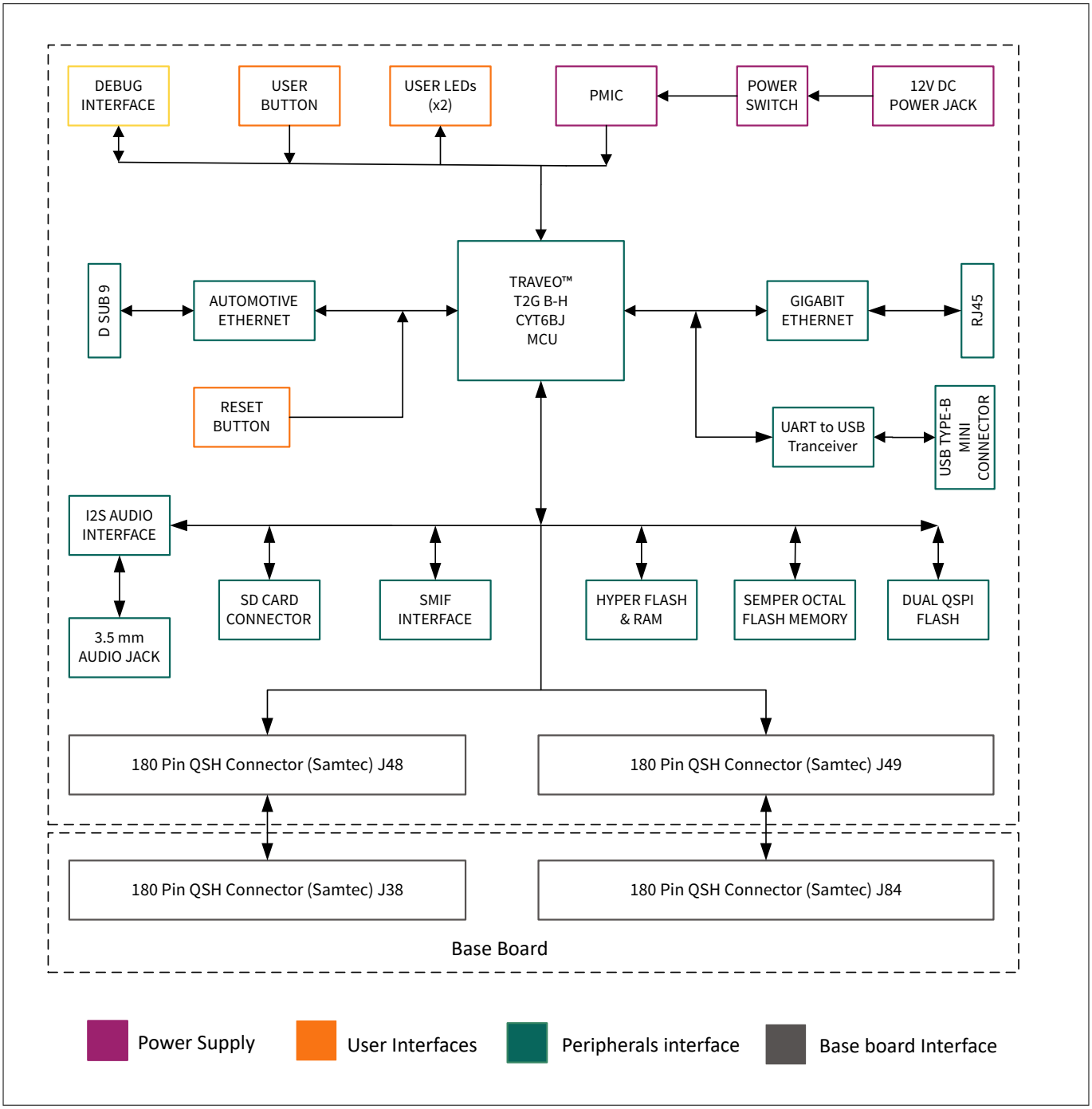

Figure 40 CYTVII-B-H-16M-320-CPU board

4 Kit design documents

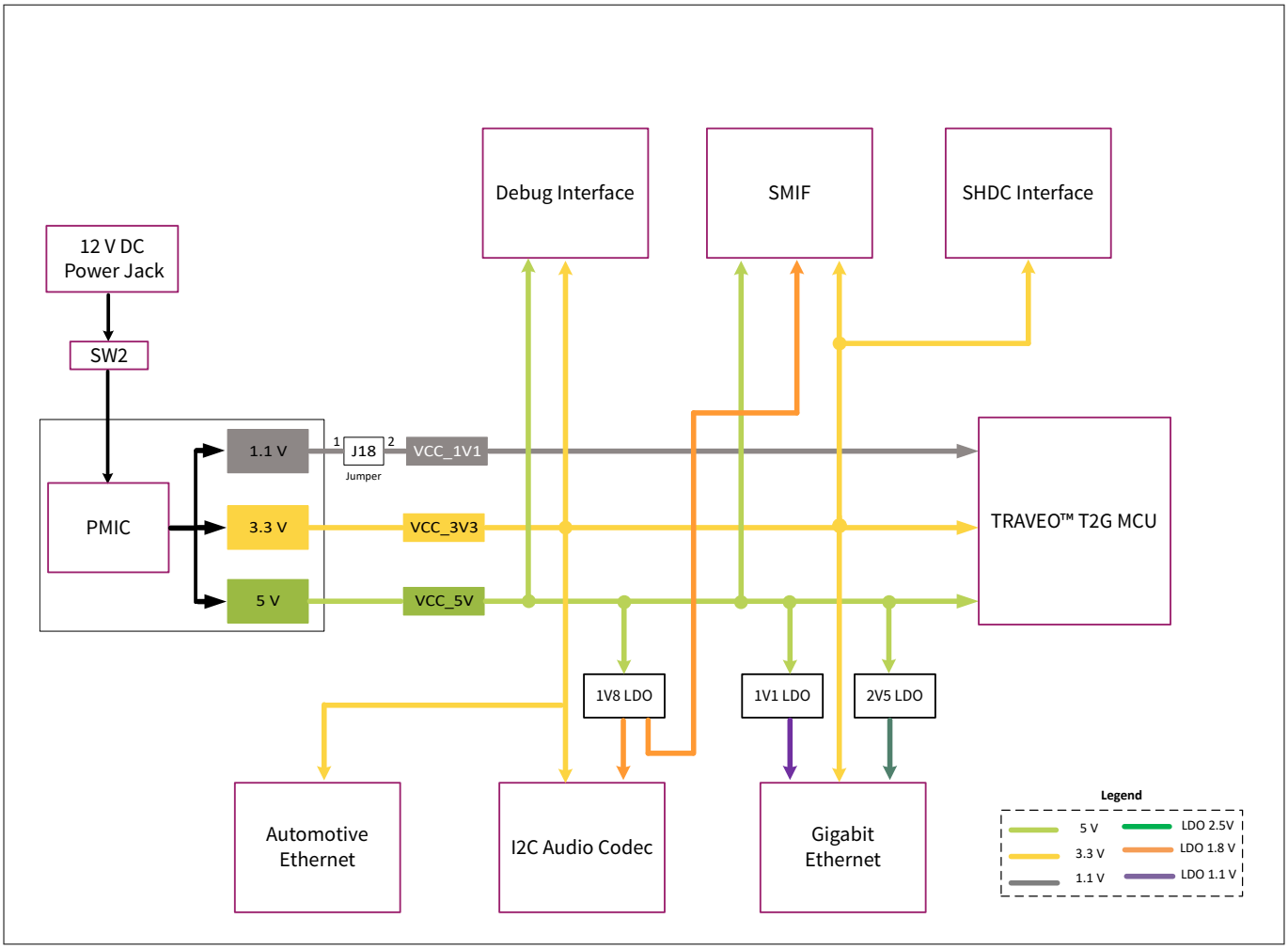

Figure 41 Power architecture

4 Kit design documents

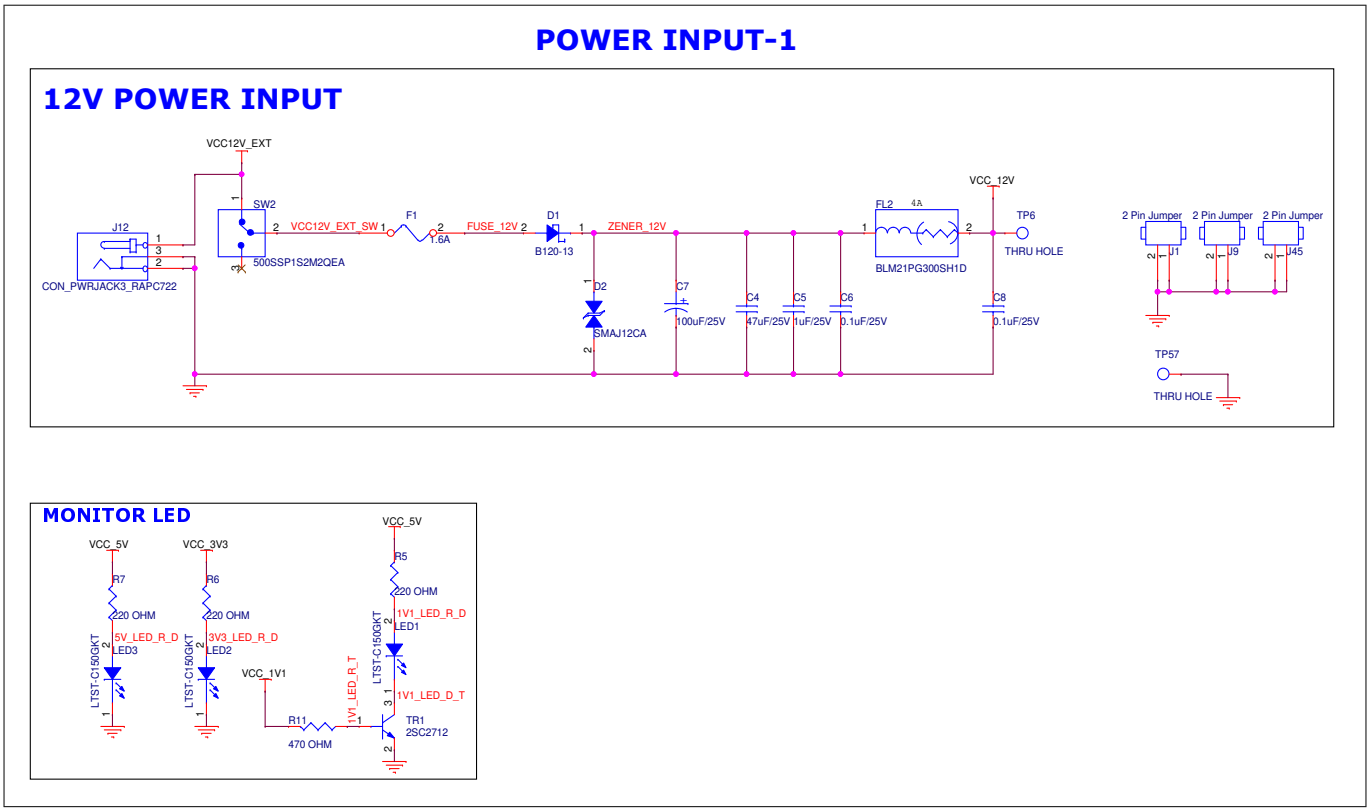

Figure 42 Power input - 1

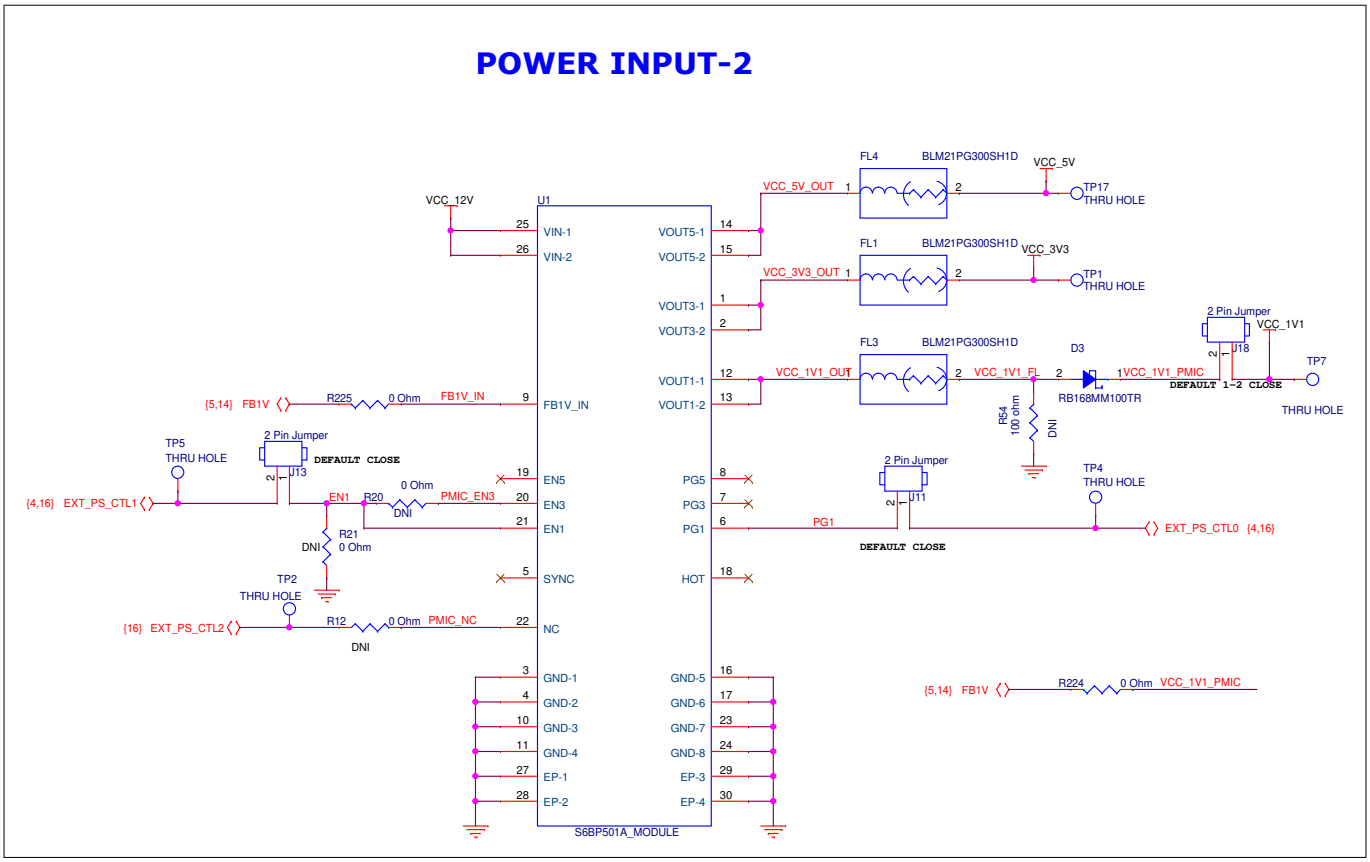

Figure 43 Power input - 2

4 Kit design documents

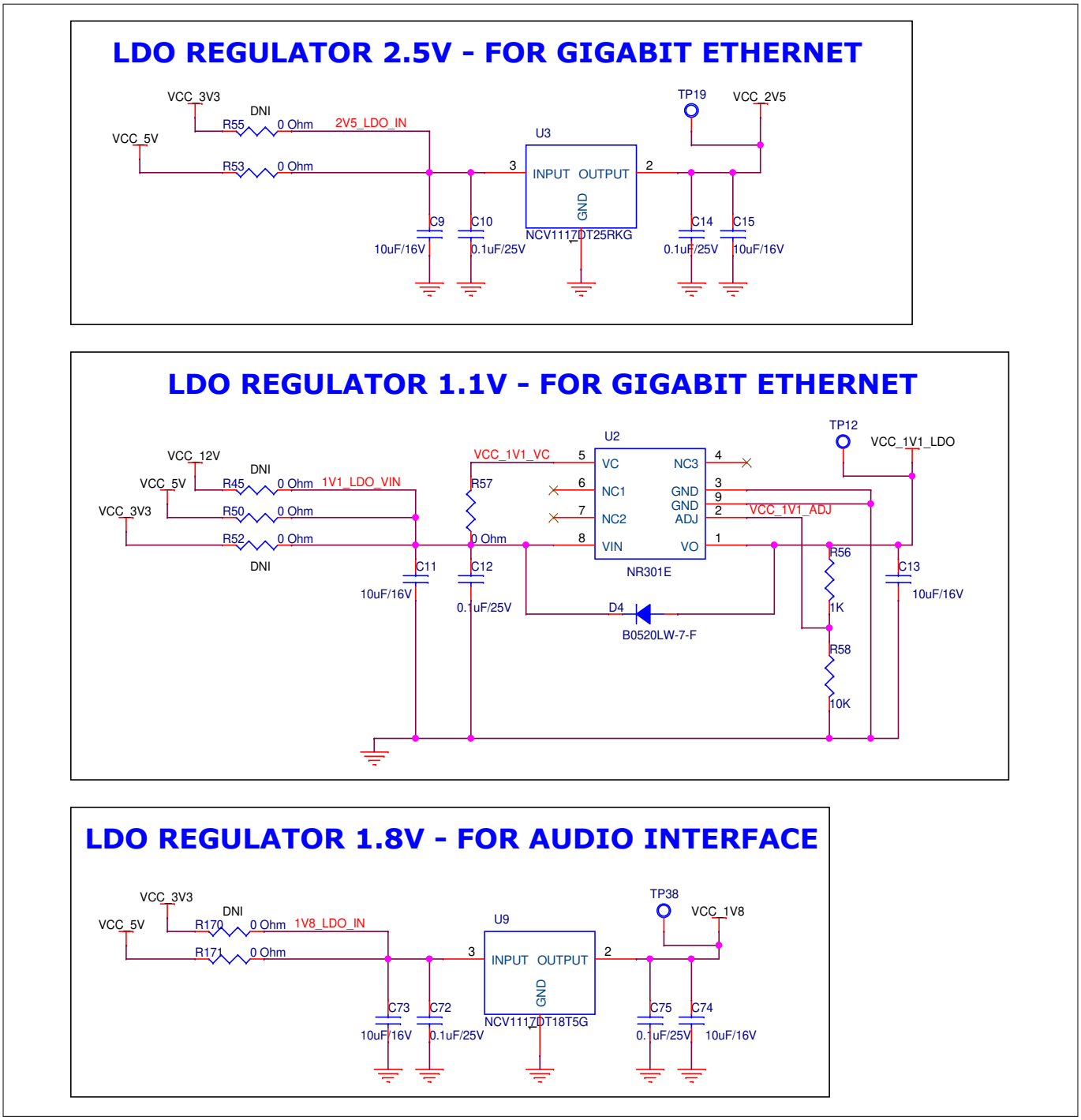

Figure 44 LDO regulator

4 Kit design documents

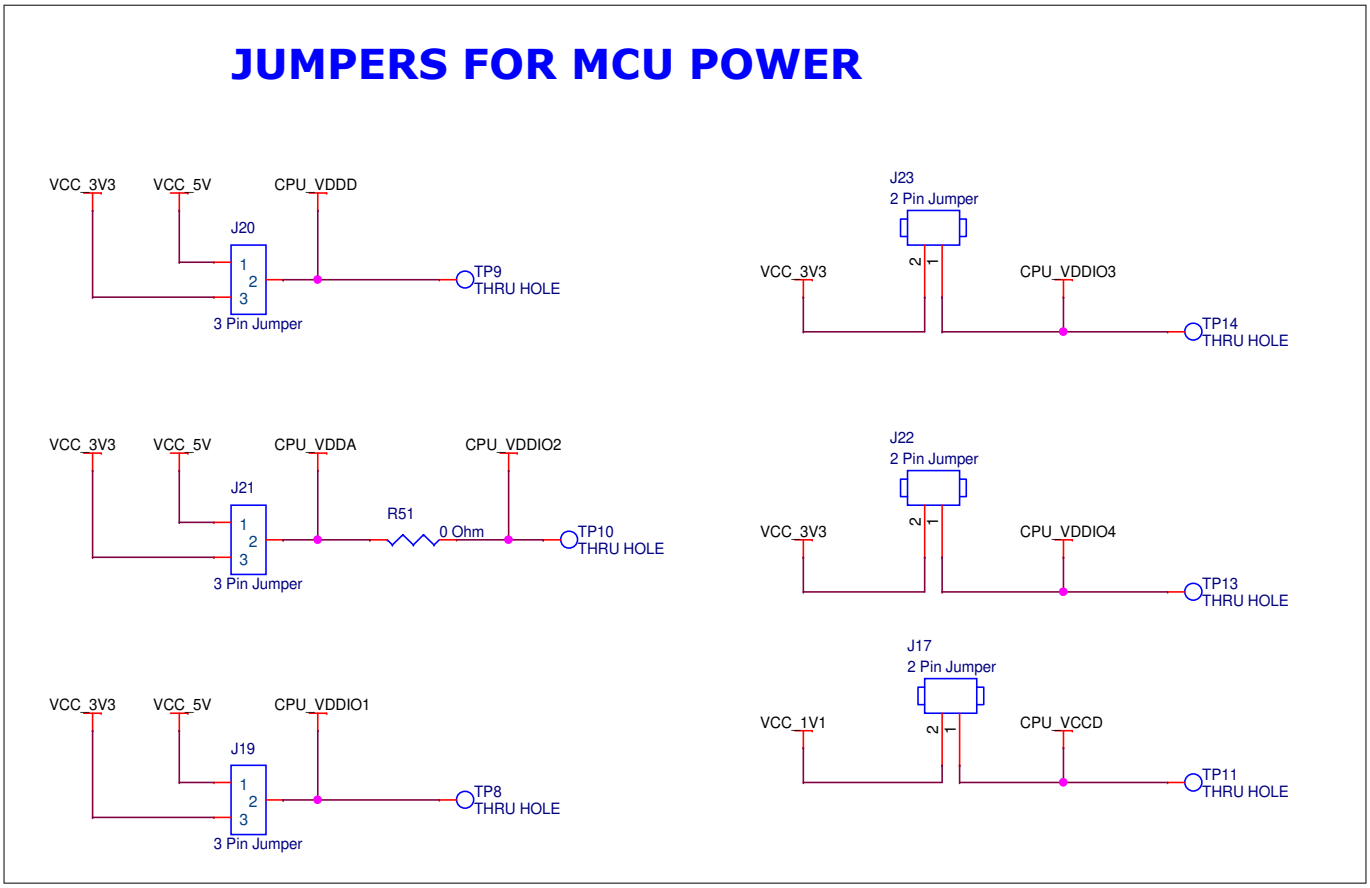

Figure 45 Jumpers for MCU power

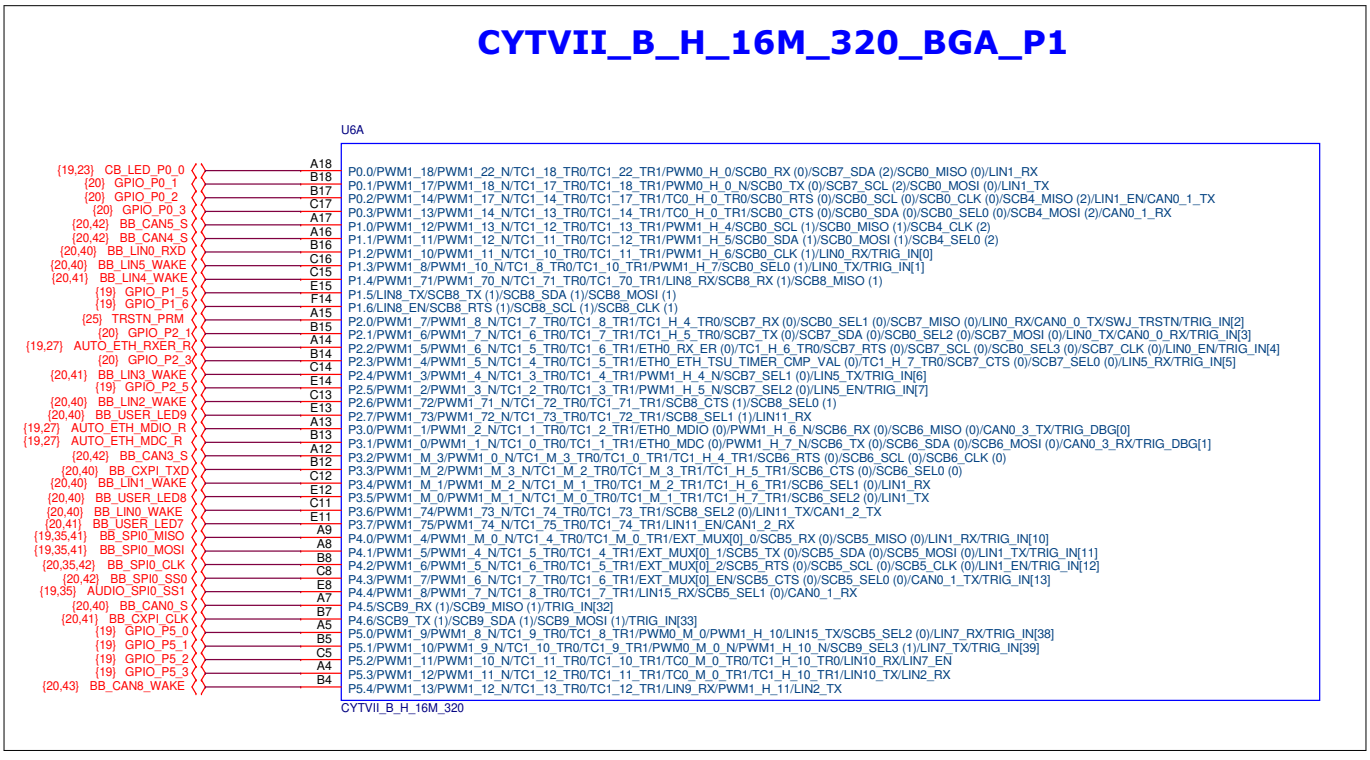

Figure 46 CYTVII_B_H_16M_320_BGA_P1

4 Kit design documents

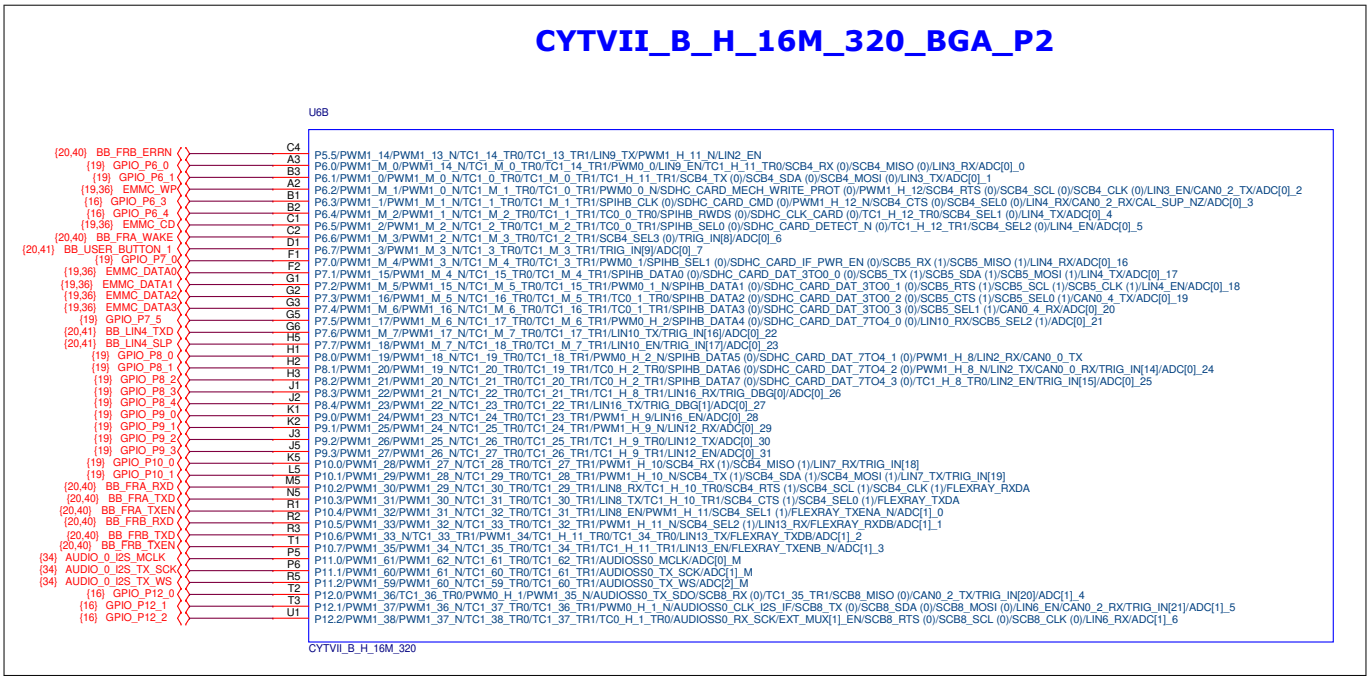

Figure 47 CYTVII_B_H_16M_320_BGA_P2

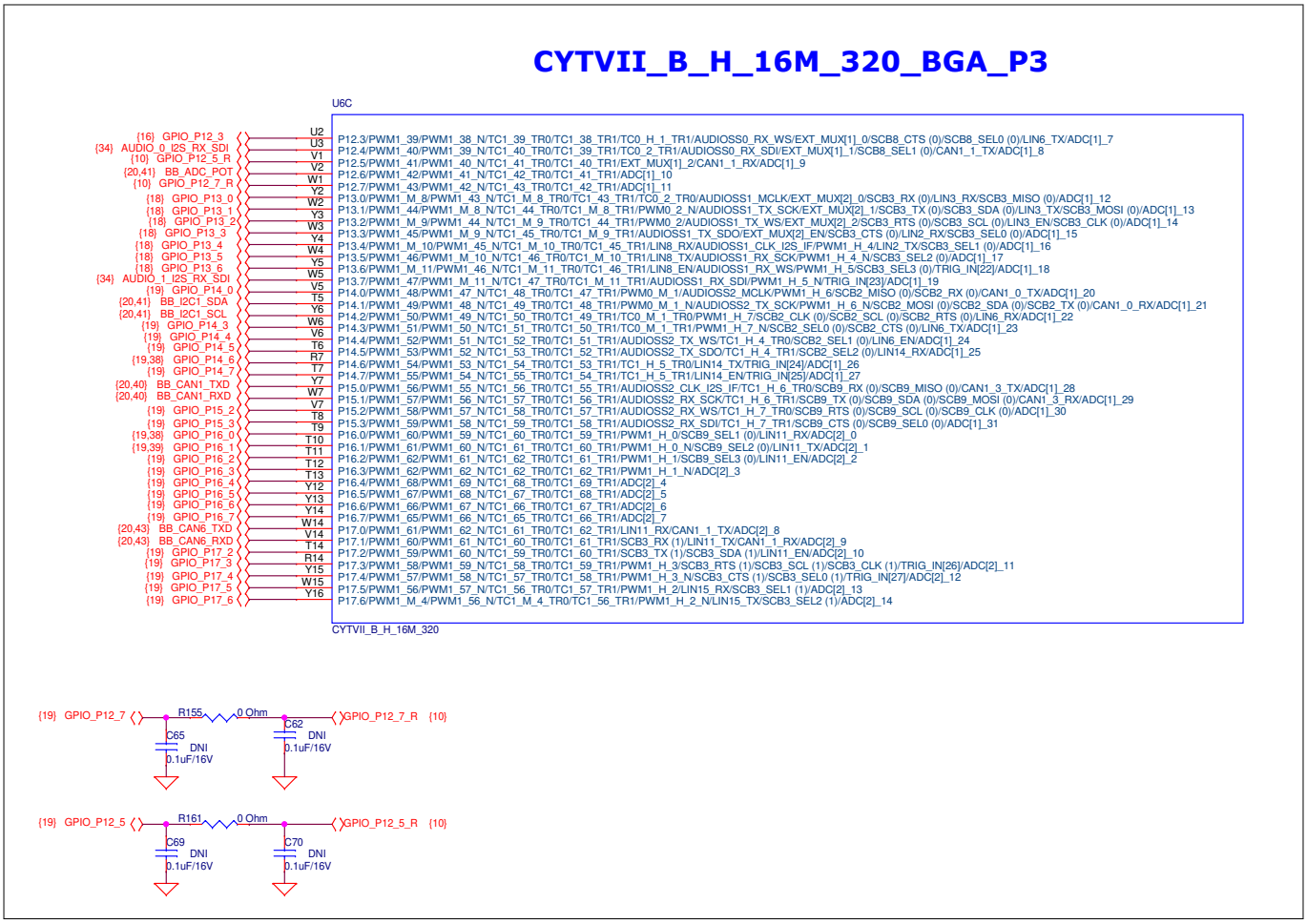

Figure 48 CYTVII_B_H_16M_320_BGA_P3

4 Kit design documents

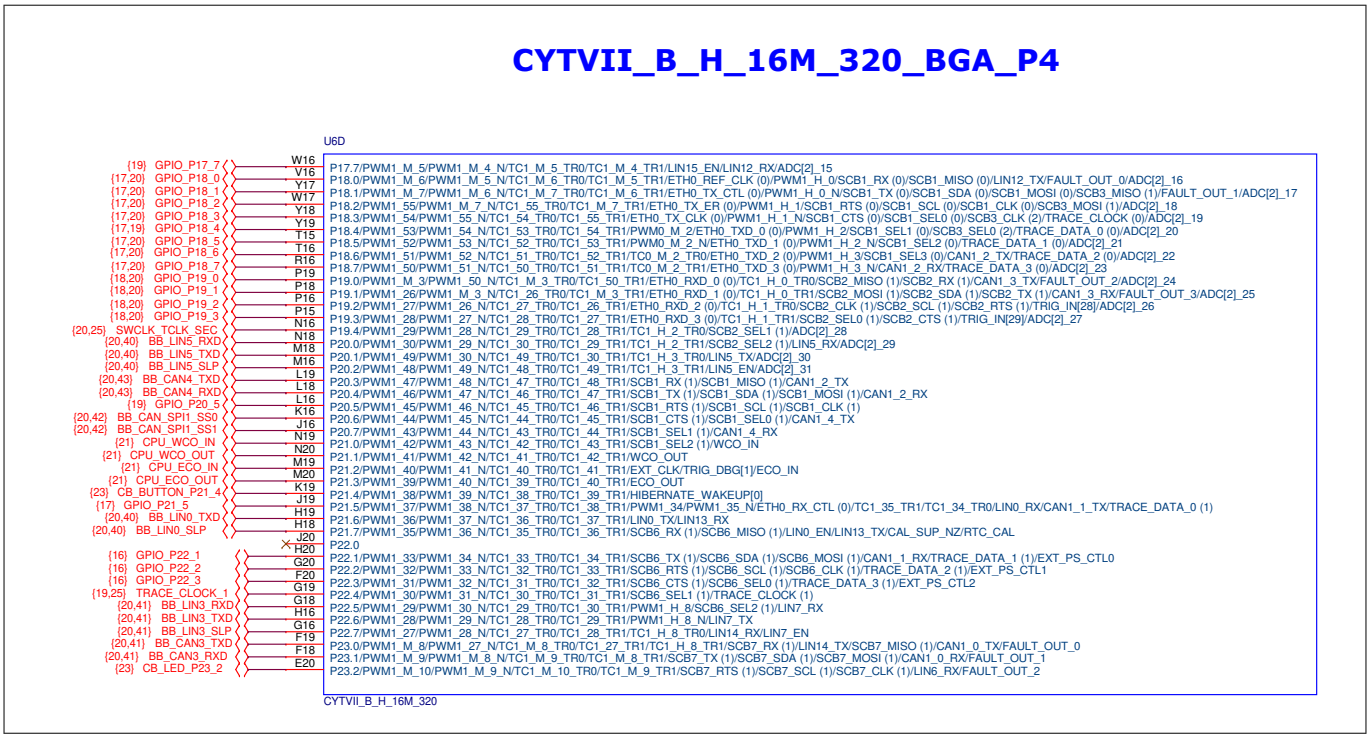

Figure 49 CYTVII_B_H_16M_320_BGA_P4

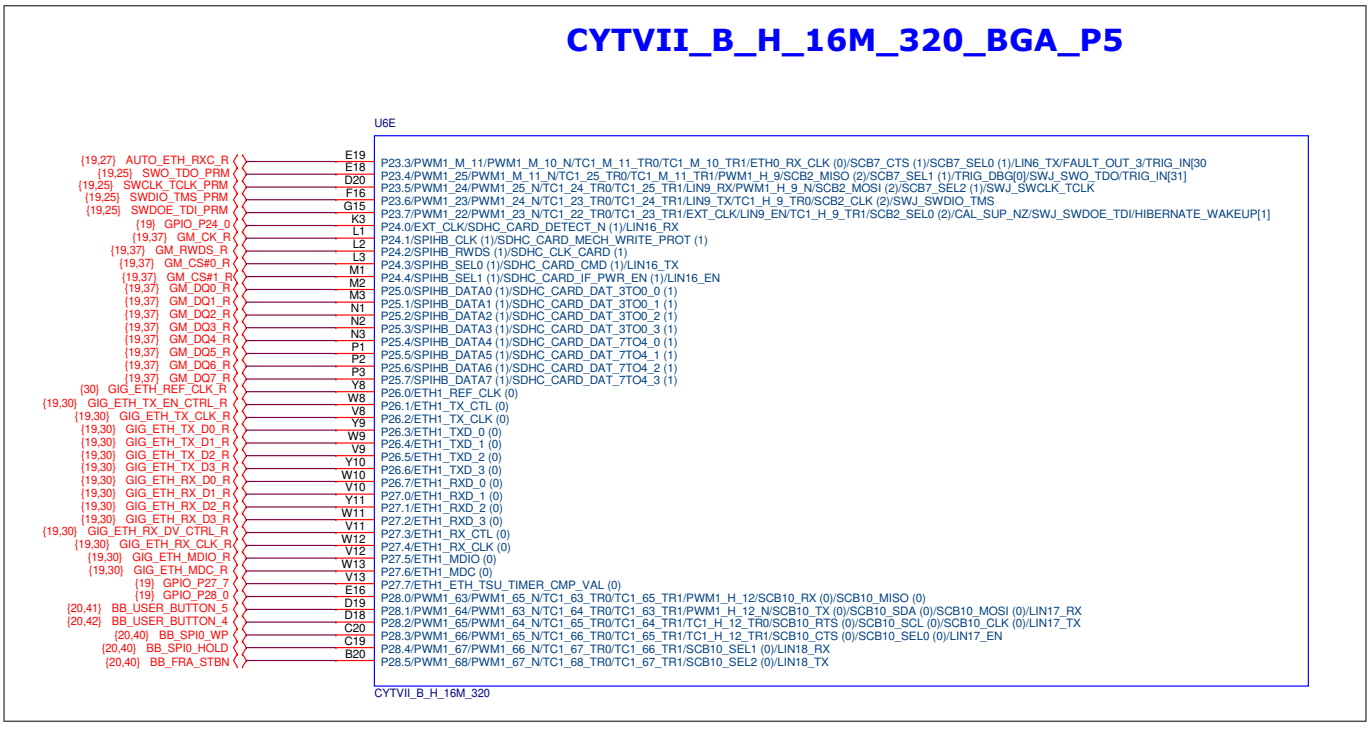

Figure 50 CYTVII_B_H_16M_320_BGA_P5

4 Kit design documents

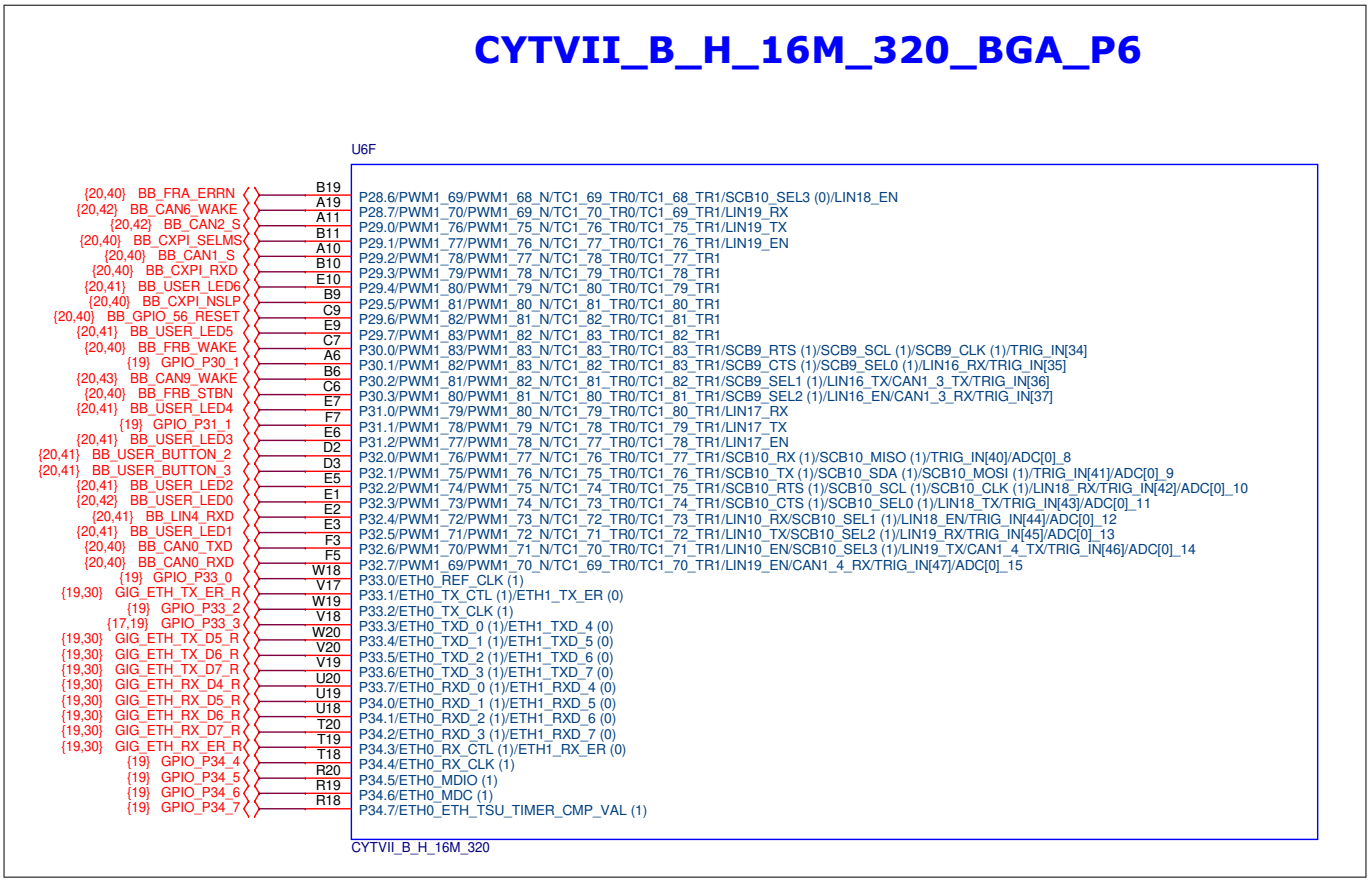

Figure 51 CYTVII_B_H_16M_320_BGA_P6

4 Kit design documents

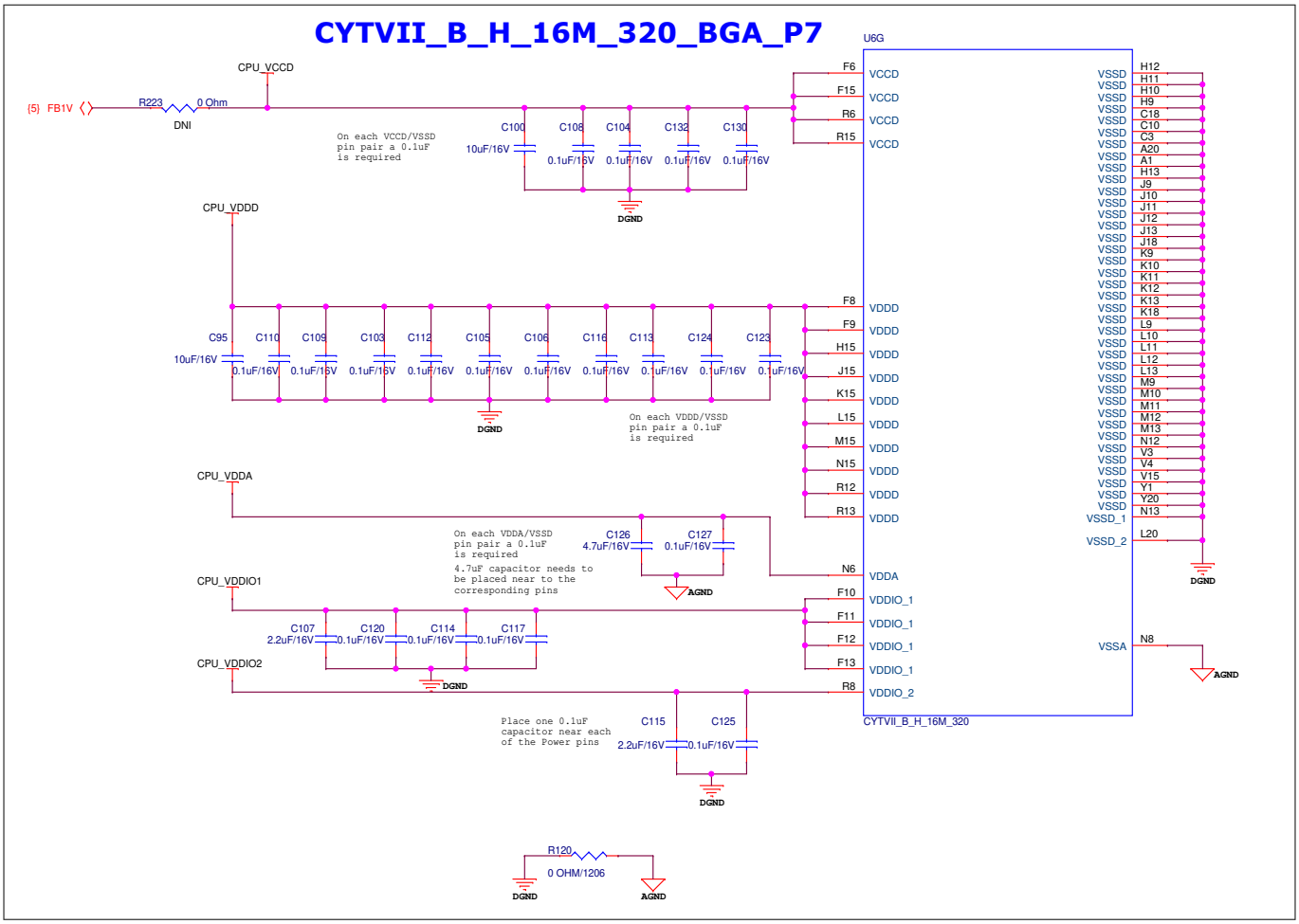

Figure 52 CYTVII_B_H_16M_320_BGA_P7

4 Kit design documents

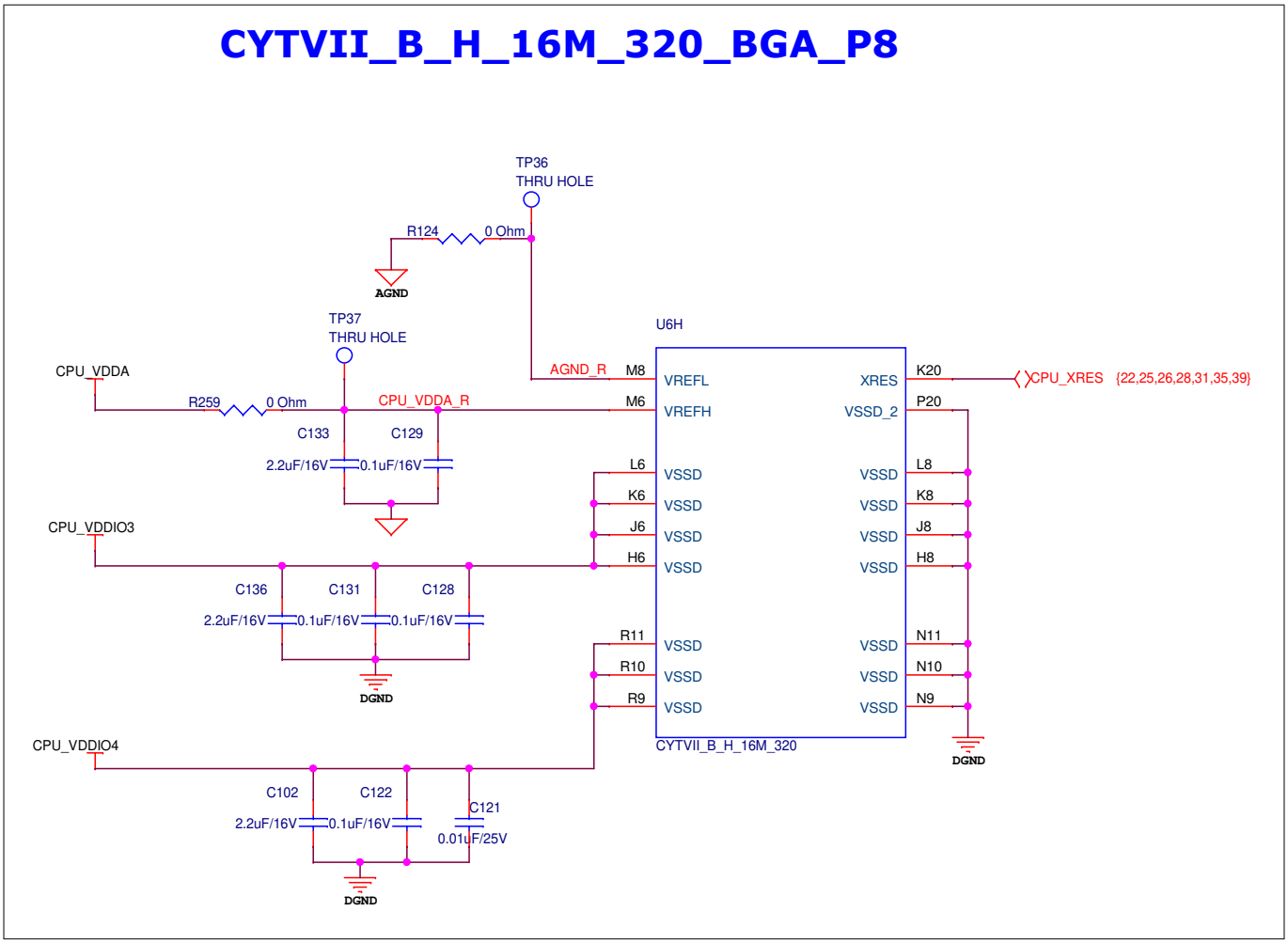

Figure 53 CYTVII_B_H_16M_320_BGA_P8

4 Kit design documents

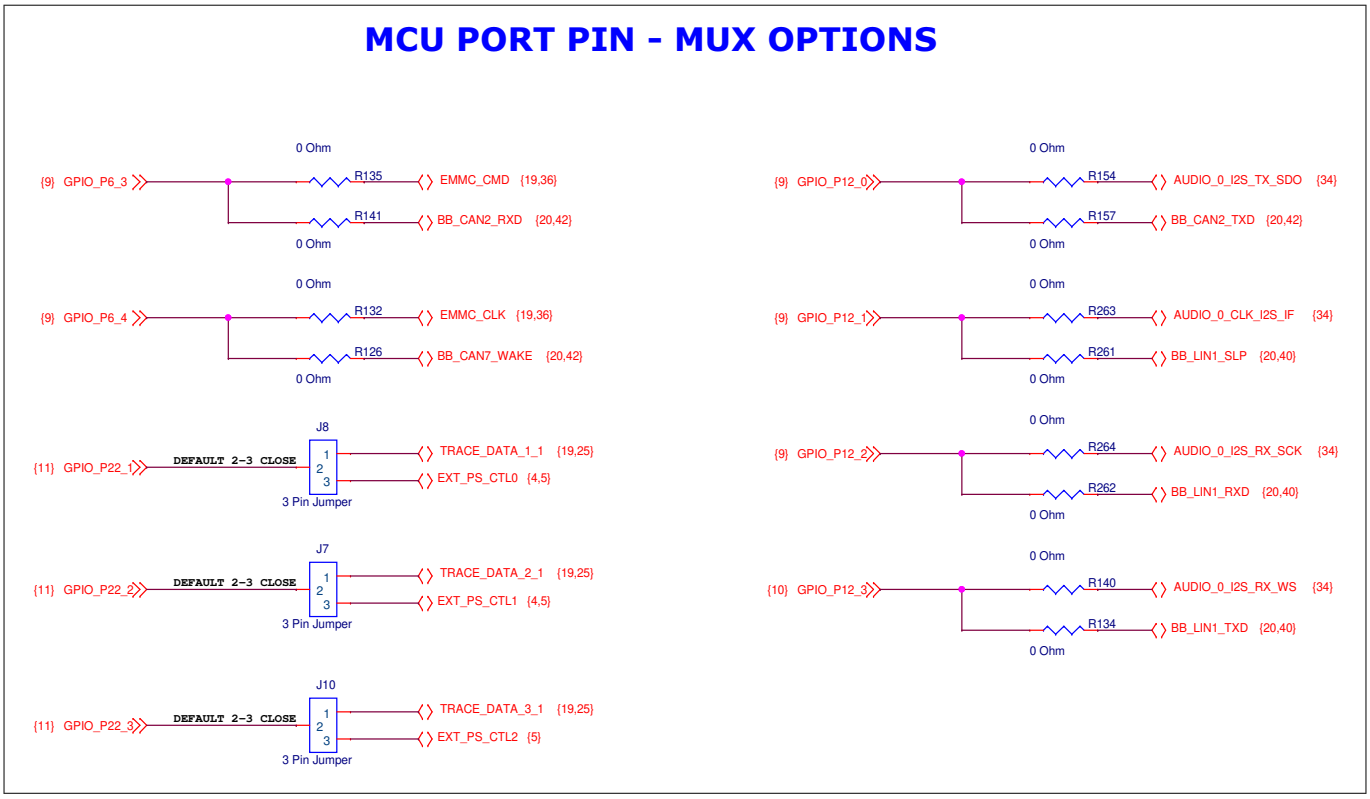

Figure 54 MCU port pin - MUX options

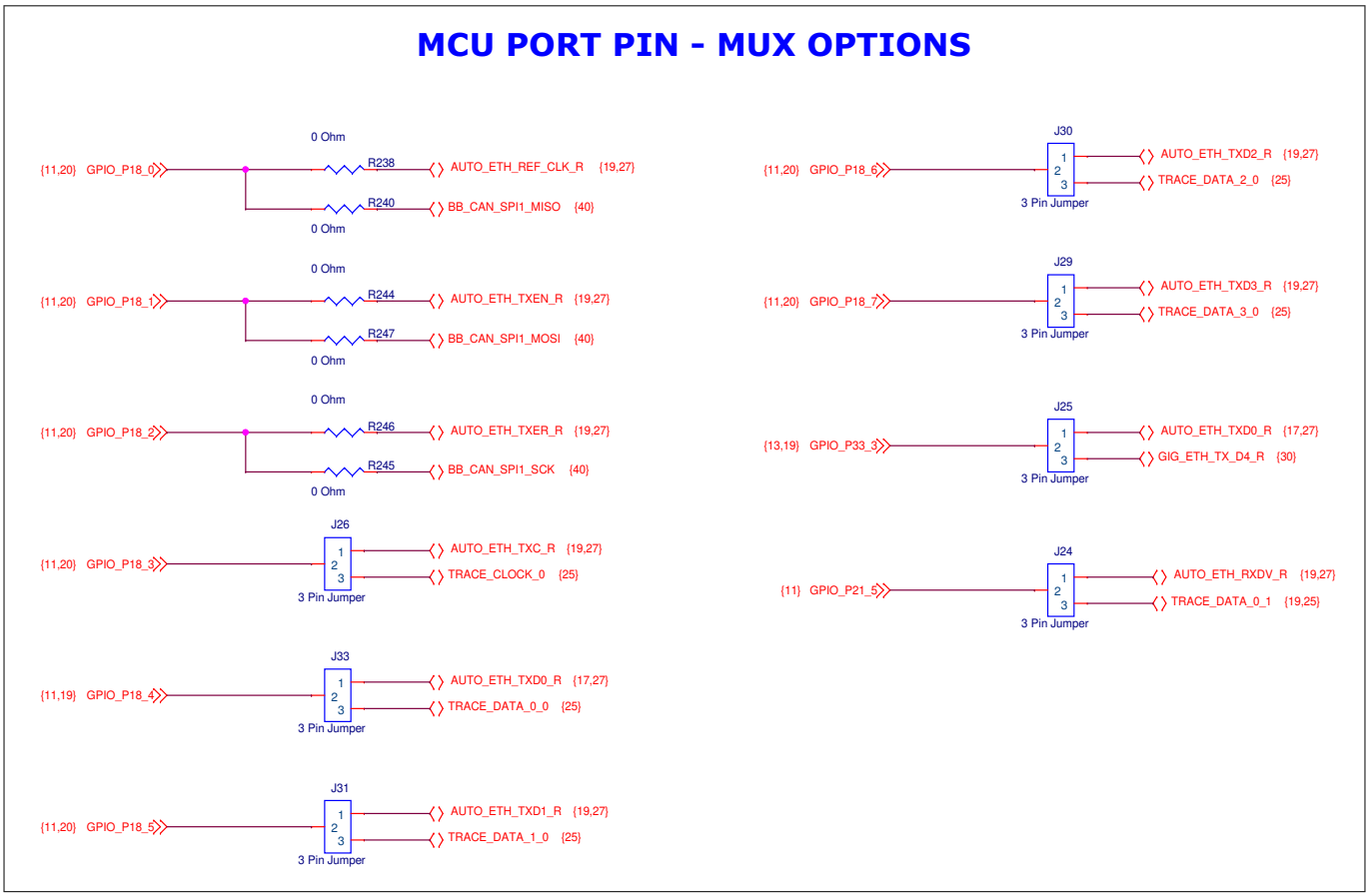

Figure 55 MCU port pin - MUX options

4 Kit design documents

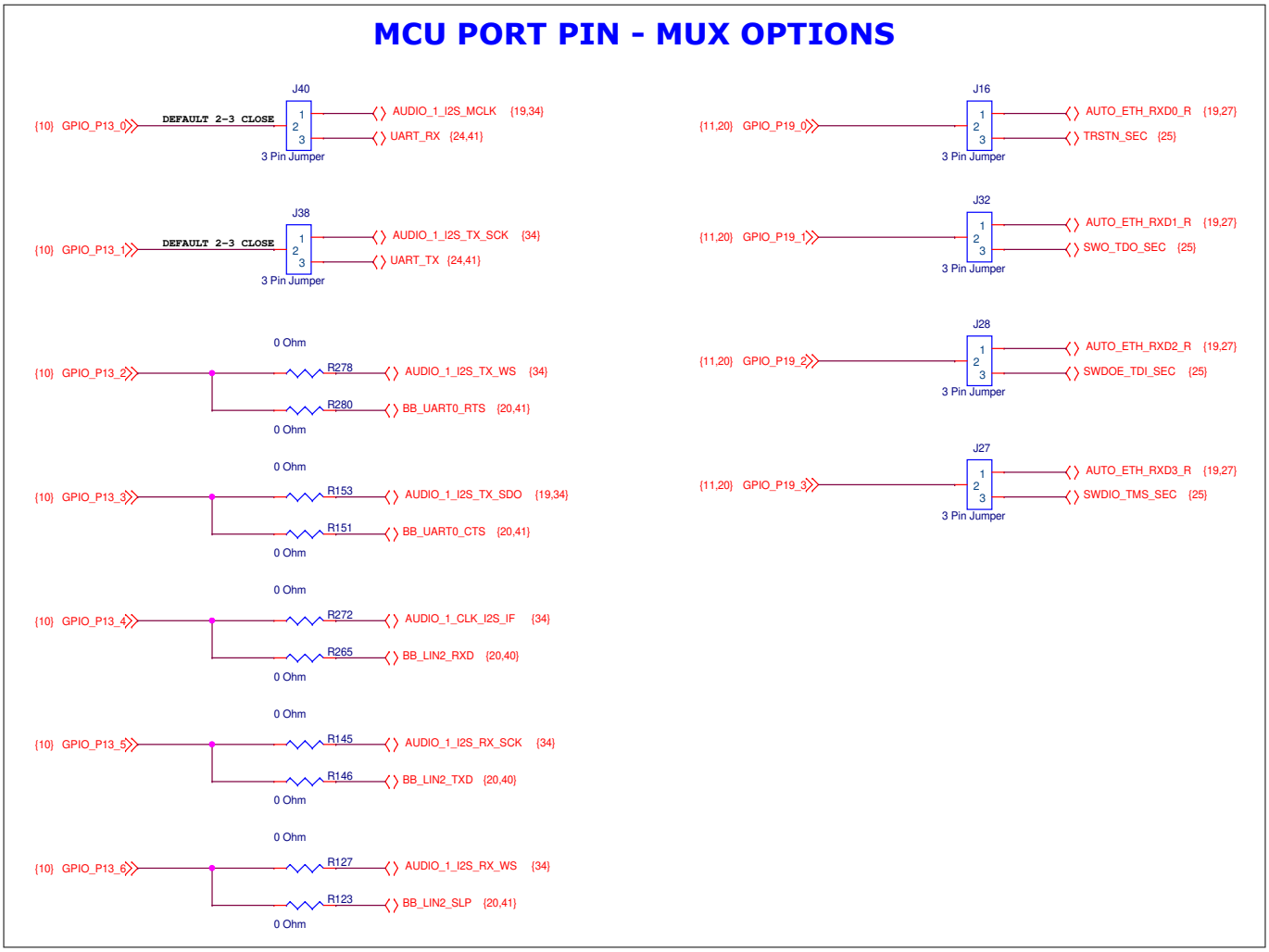

Figure 56 MCU port pin - MUX options

4 Kit design documents

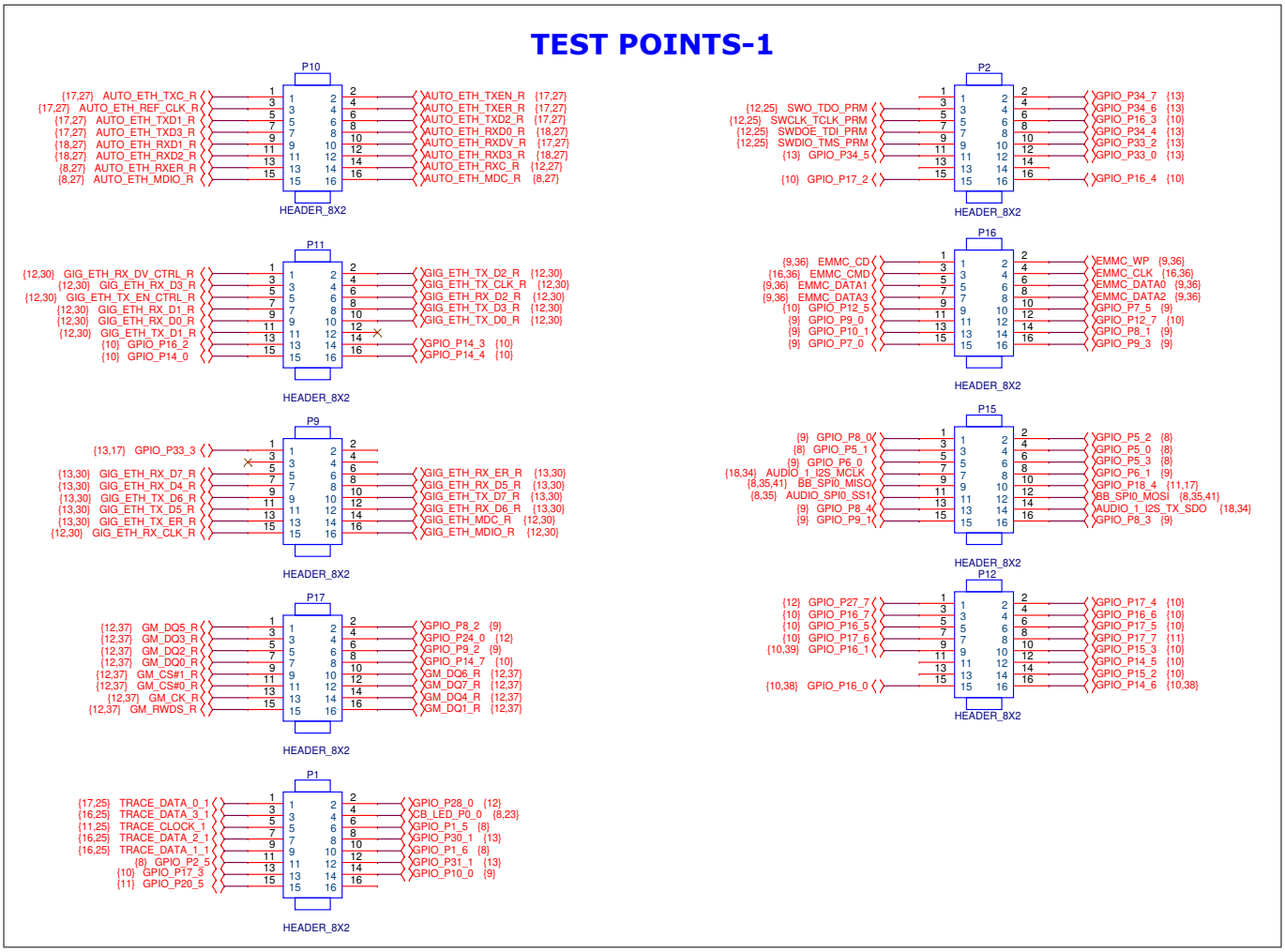

Figure 57 Test points - 1

4 Kit design documents

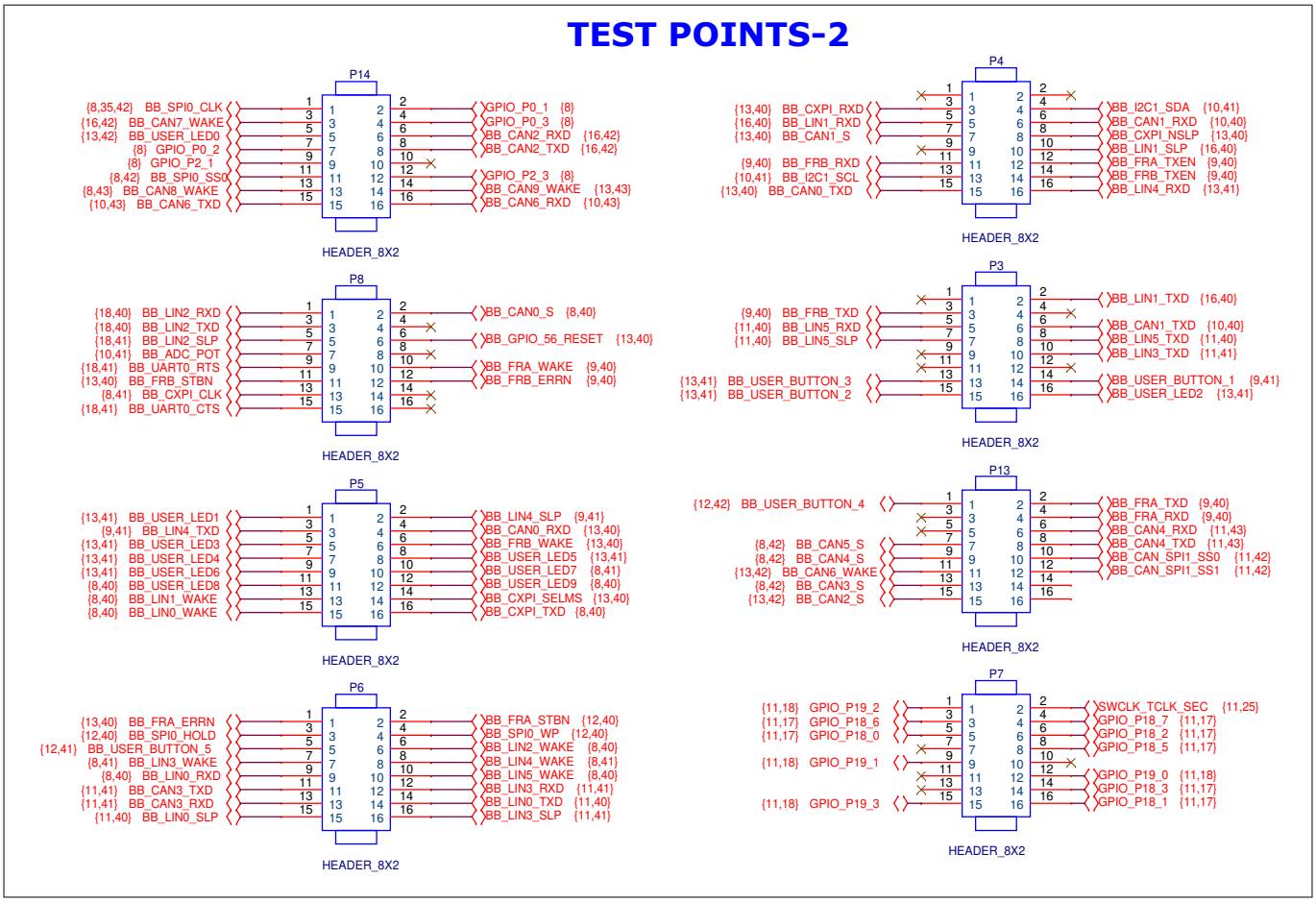

Figure 58 Test points - 2

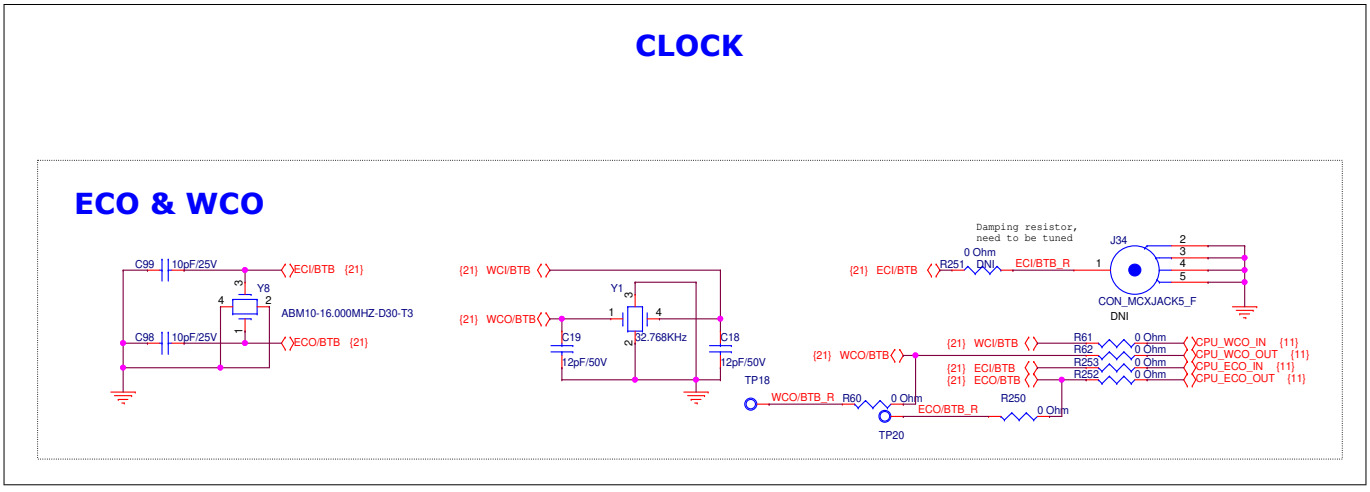

Figure 59 Clock

4 Kit design documents

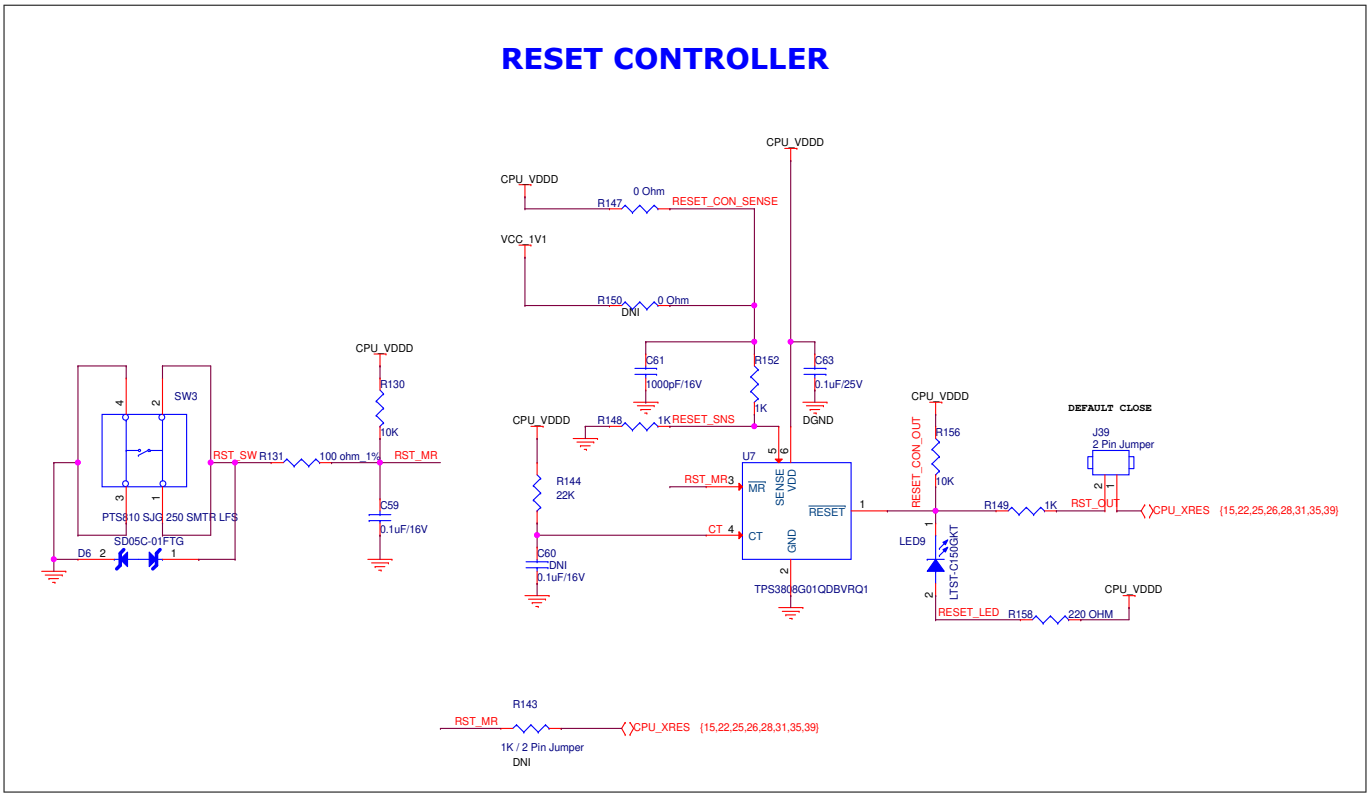

Figure 60 Reset controller

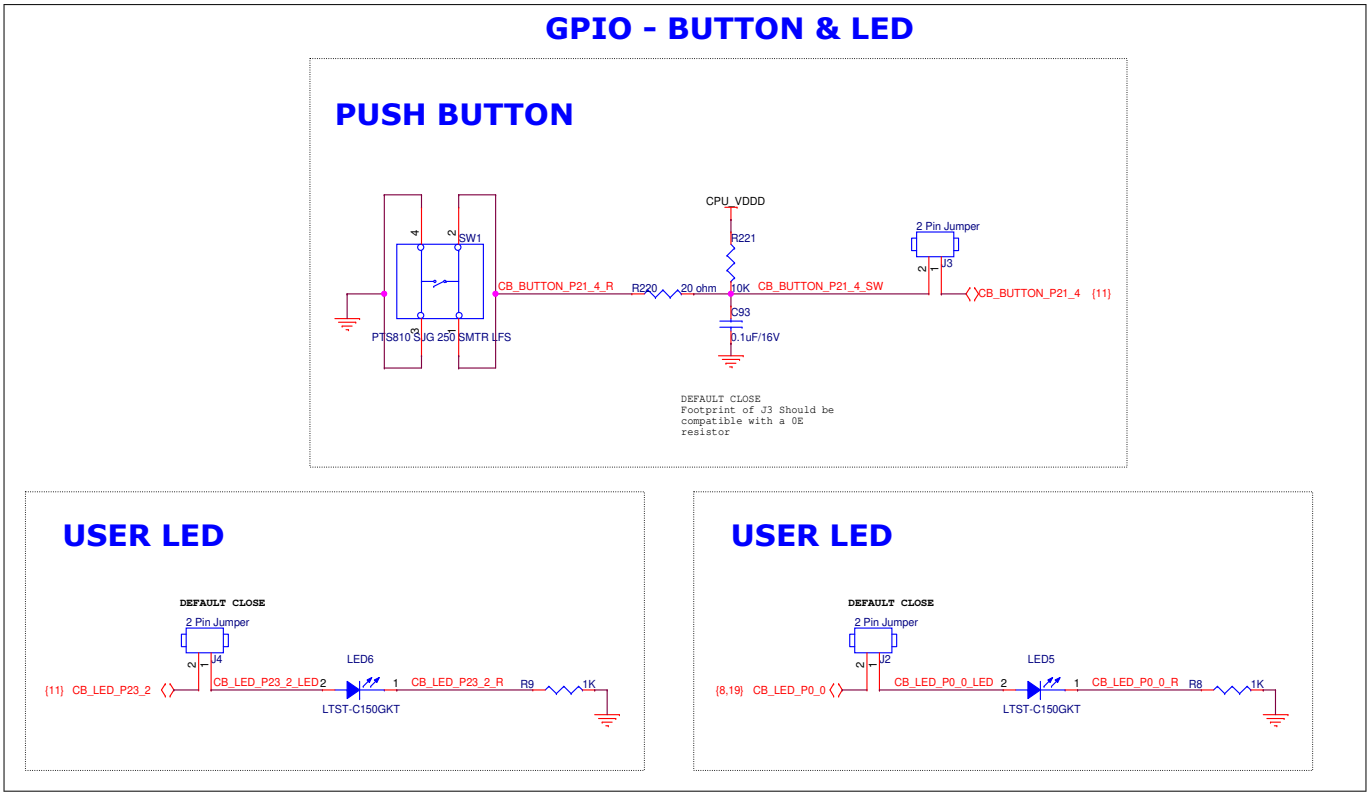

Figure 61 GPIO - button and LED

4 Kit design documents

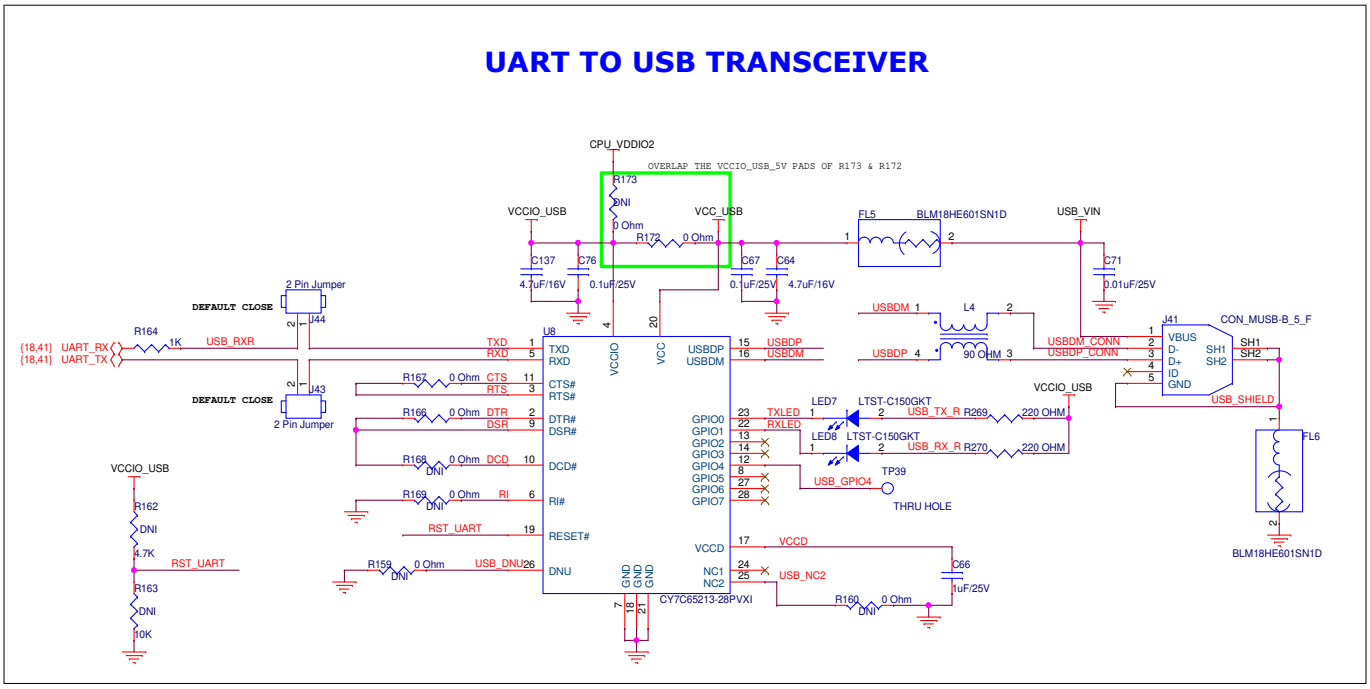

Figure 62 UART to USB transceiver

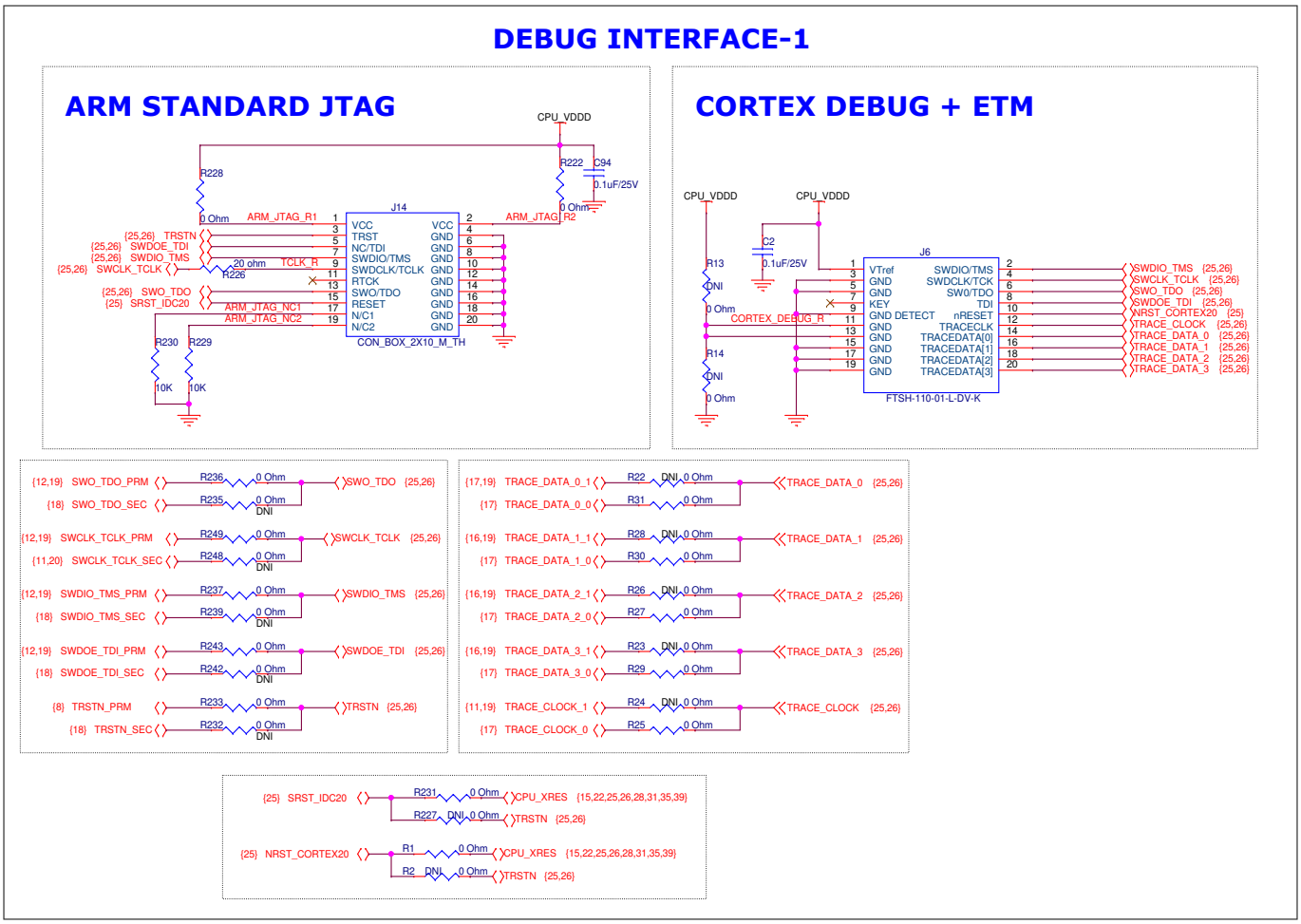

Figure 63 Debug interface - 1

4 Kit design documents

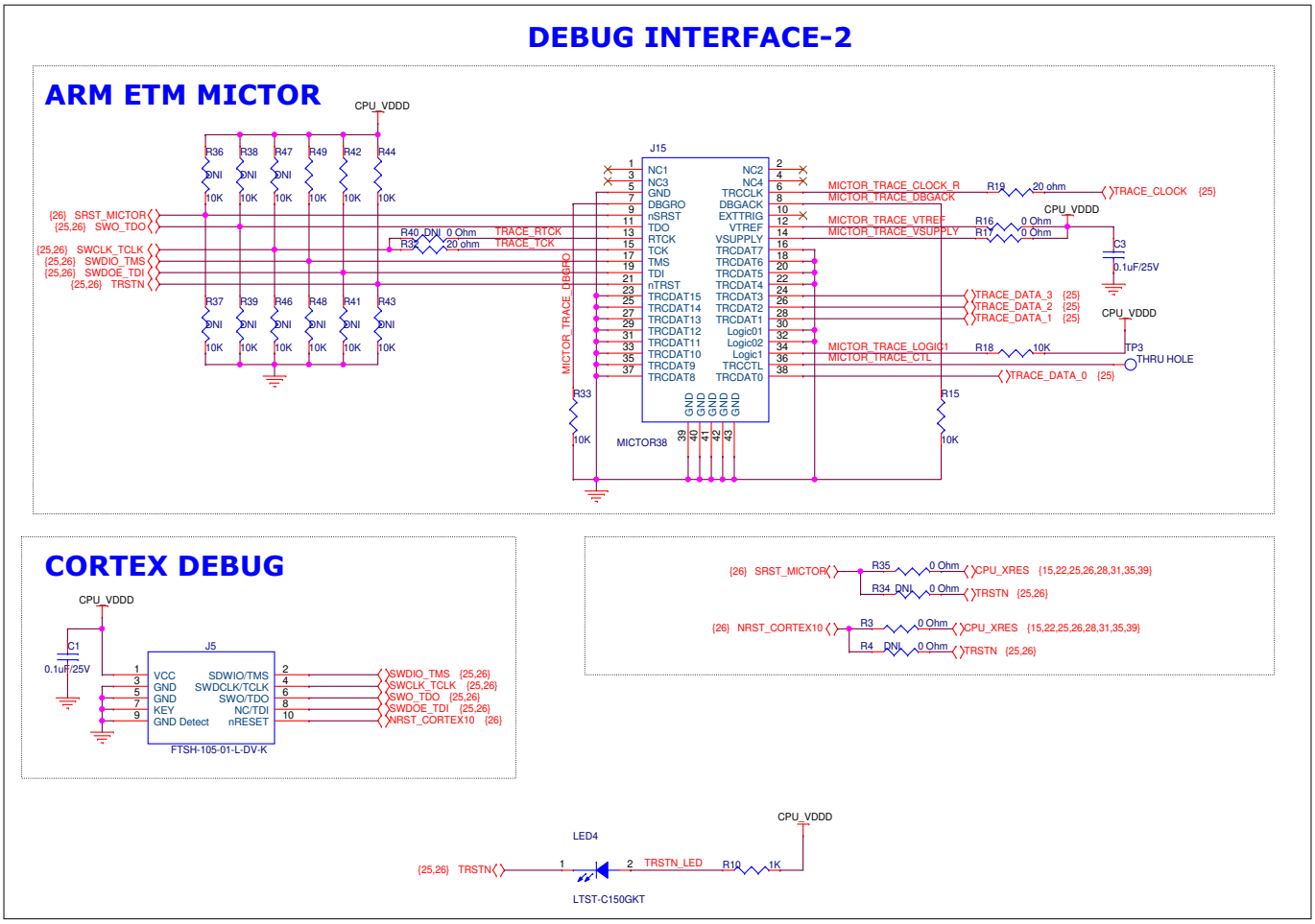

Figure 64 Debug interface - 2

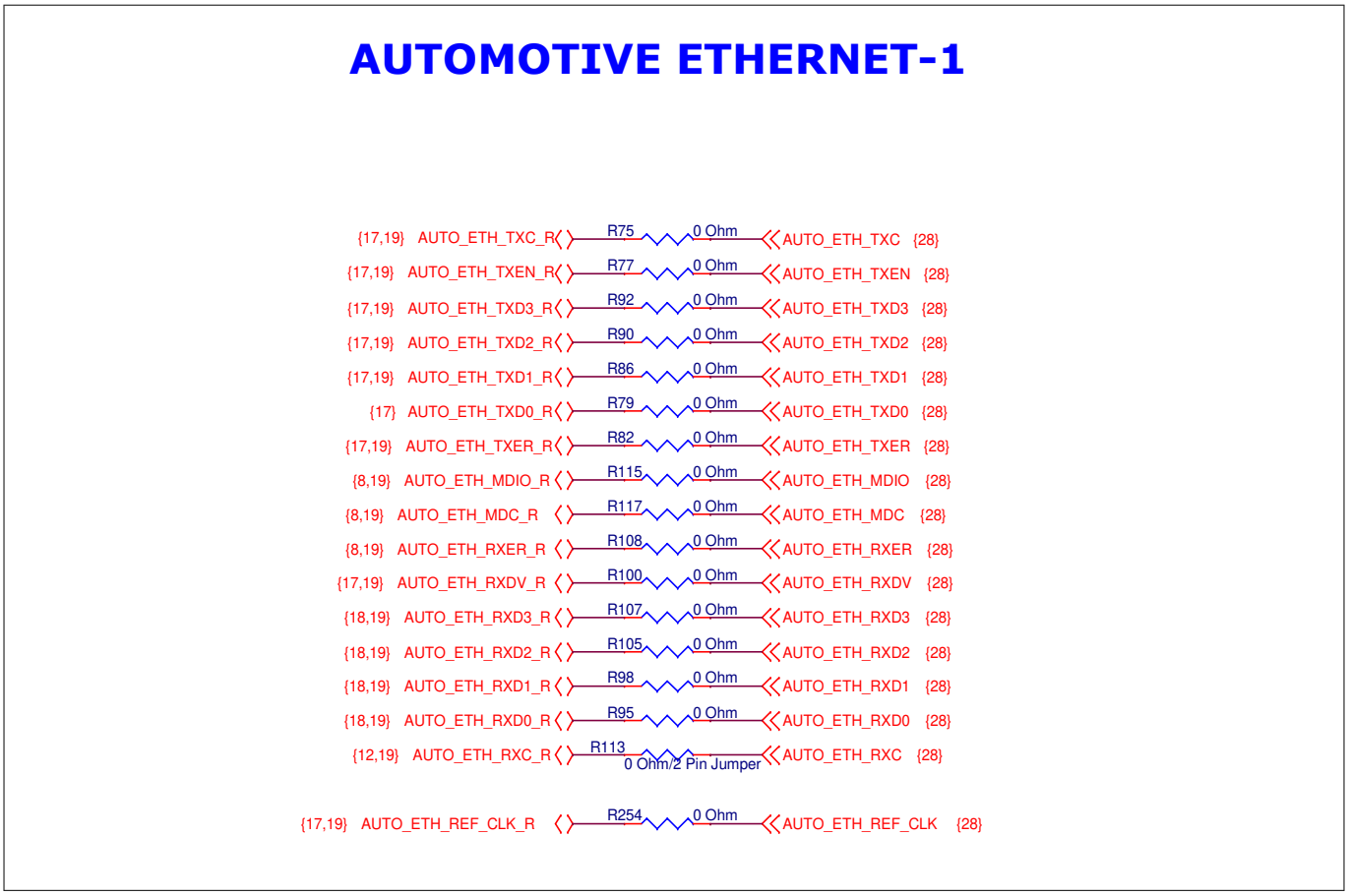

Figure 65 Automotive Ethernet - 1

4 Kit design documents

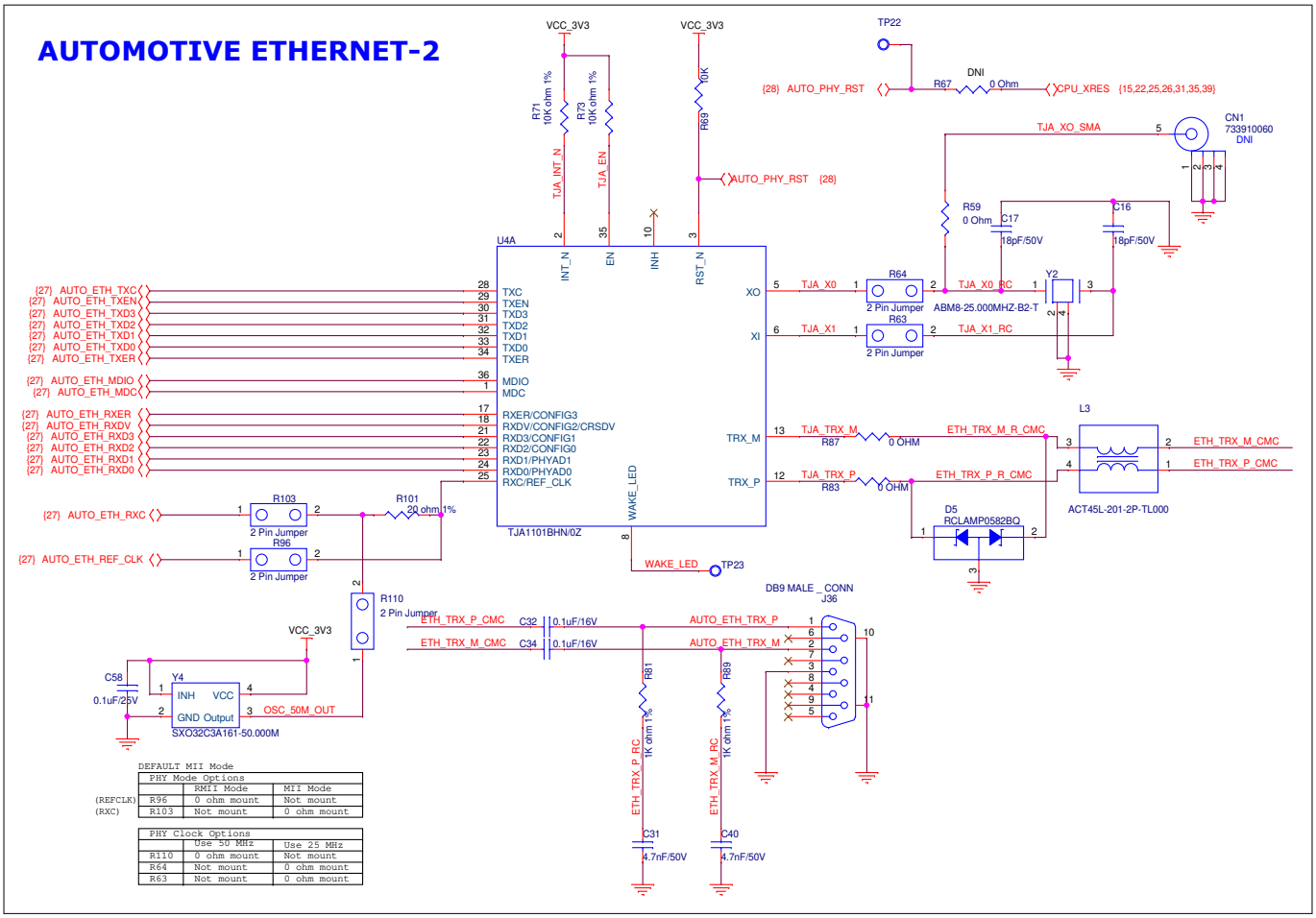

Figure 66 Automotive Ethernet - 2

4 Kit design documents

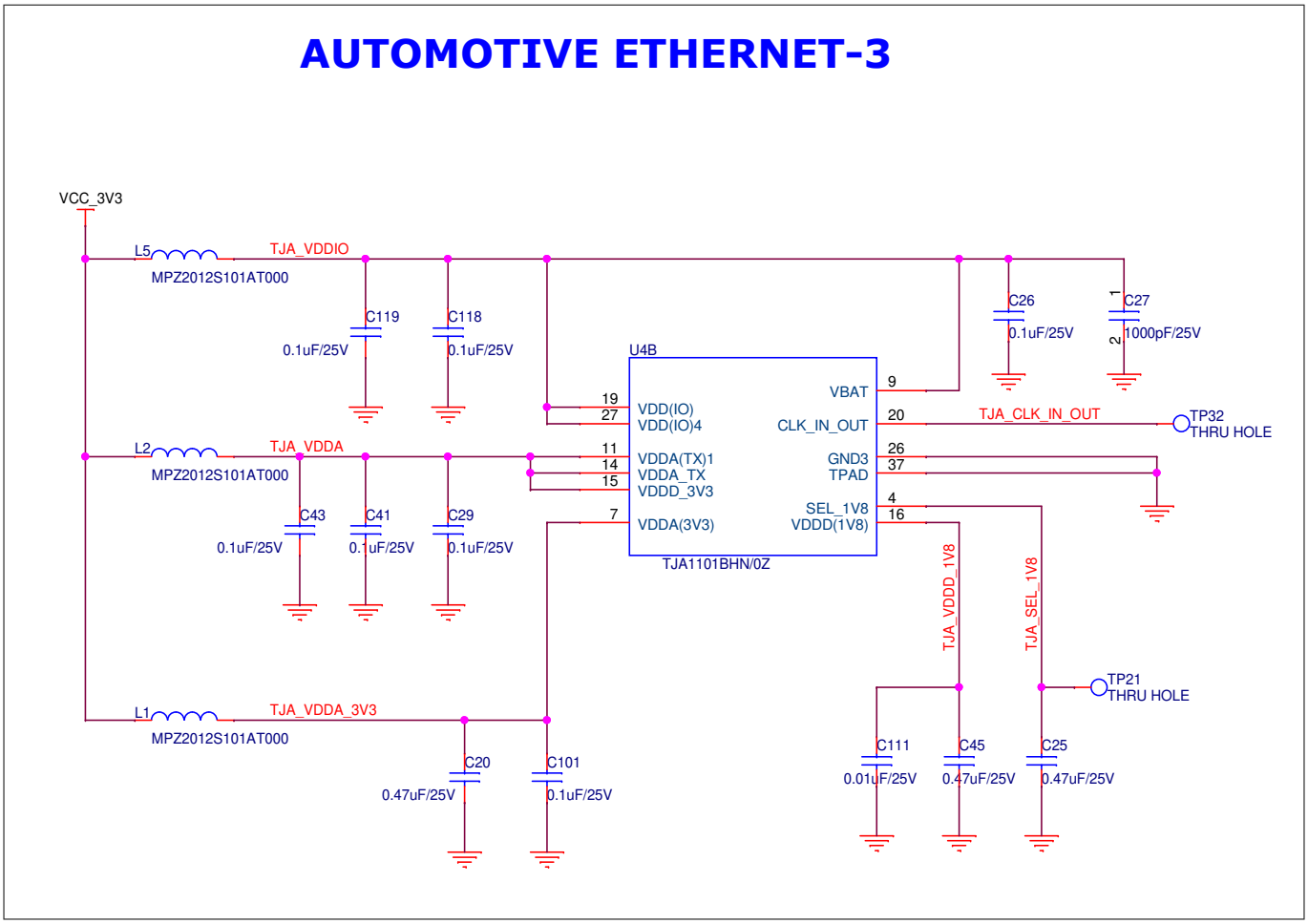

Figure 67 Automotive Ethernet - 3

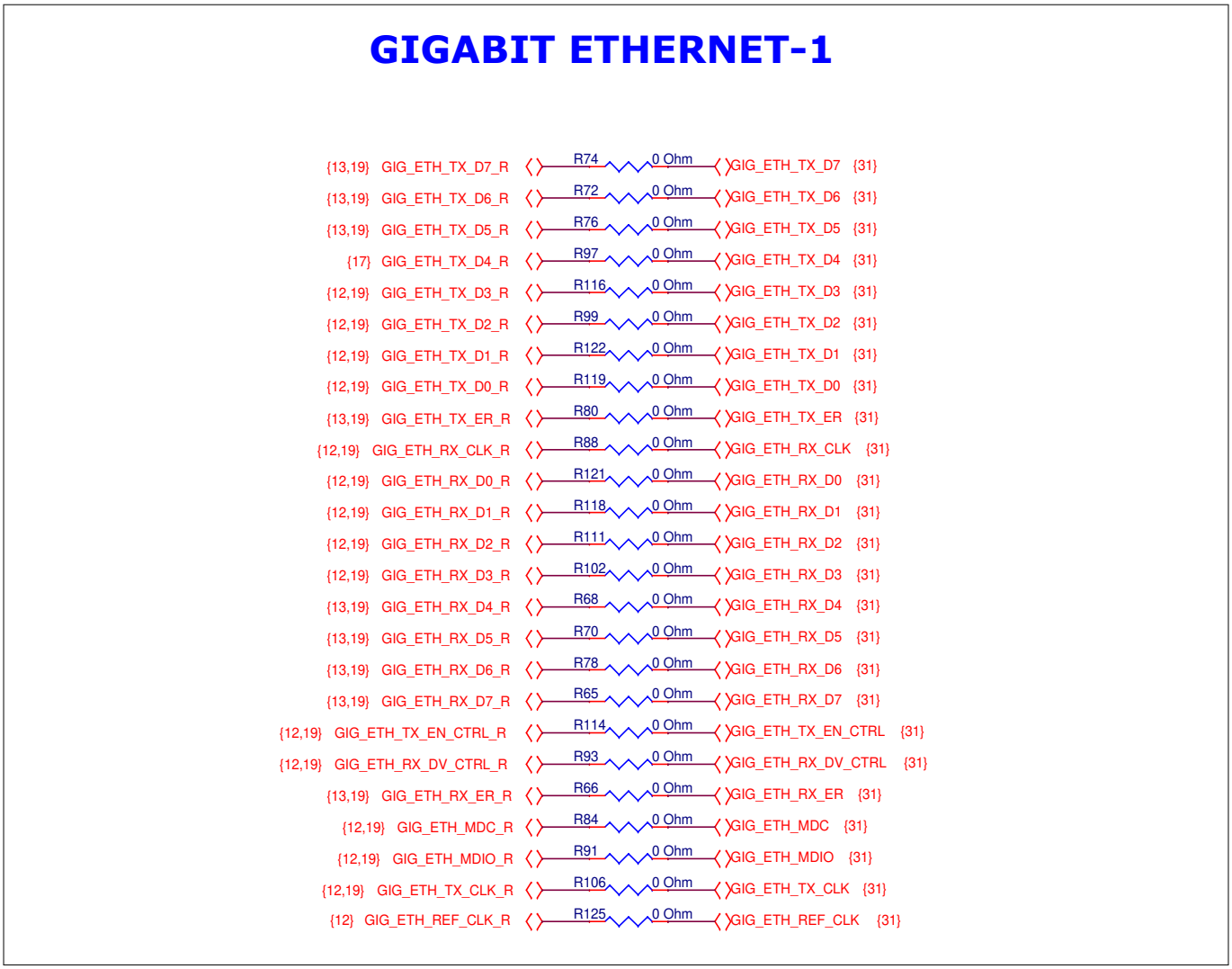

Figure 68 Gigabit Ethernet - 1

4 Kit design documents

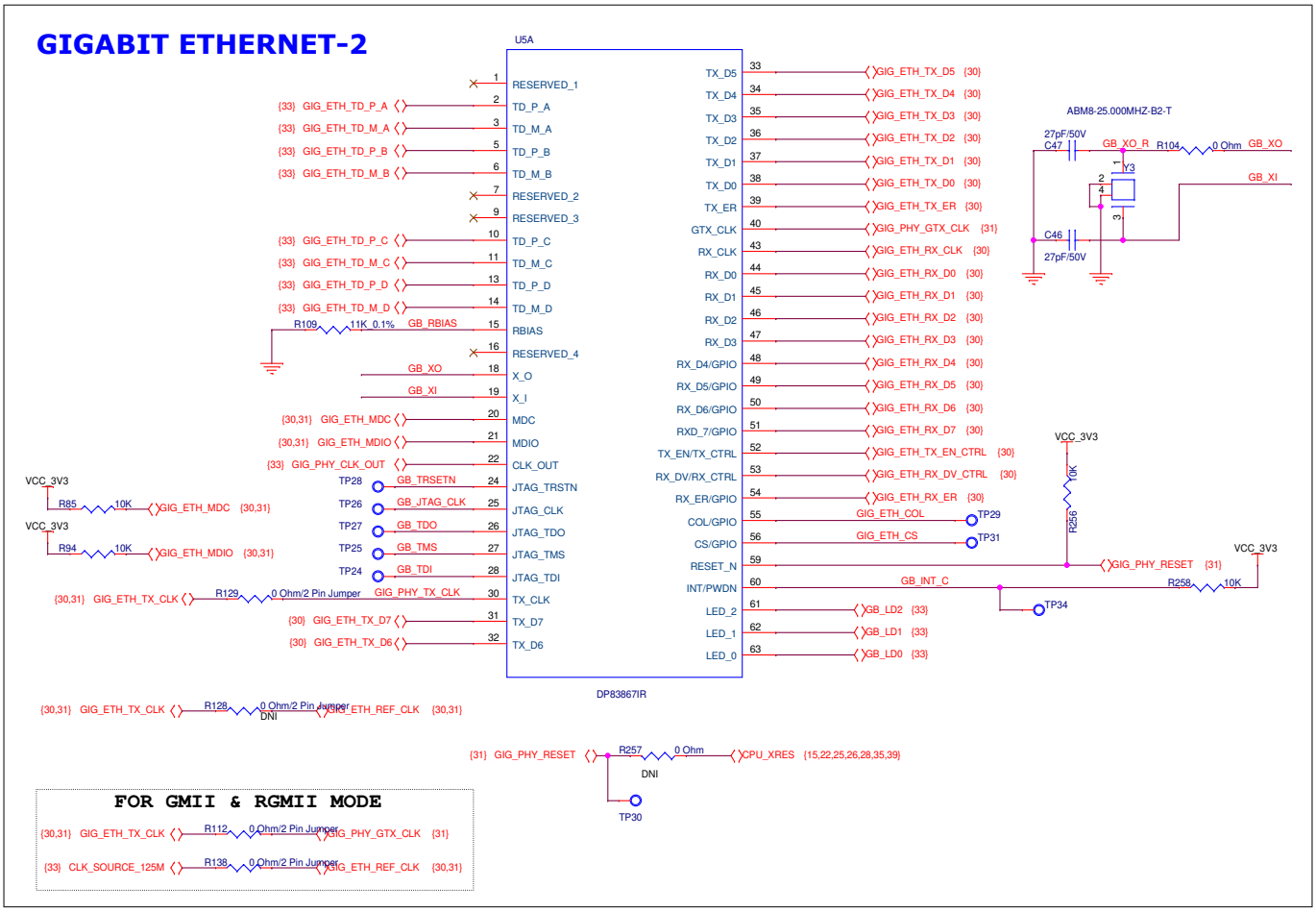

Figure 69 Gigabit Ethernet - 2

4 Kit design documents

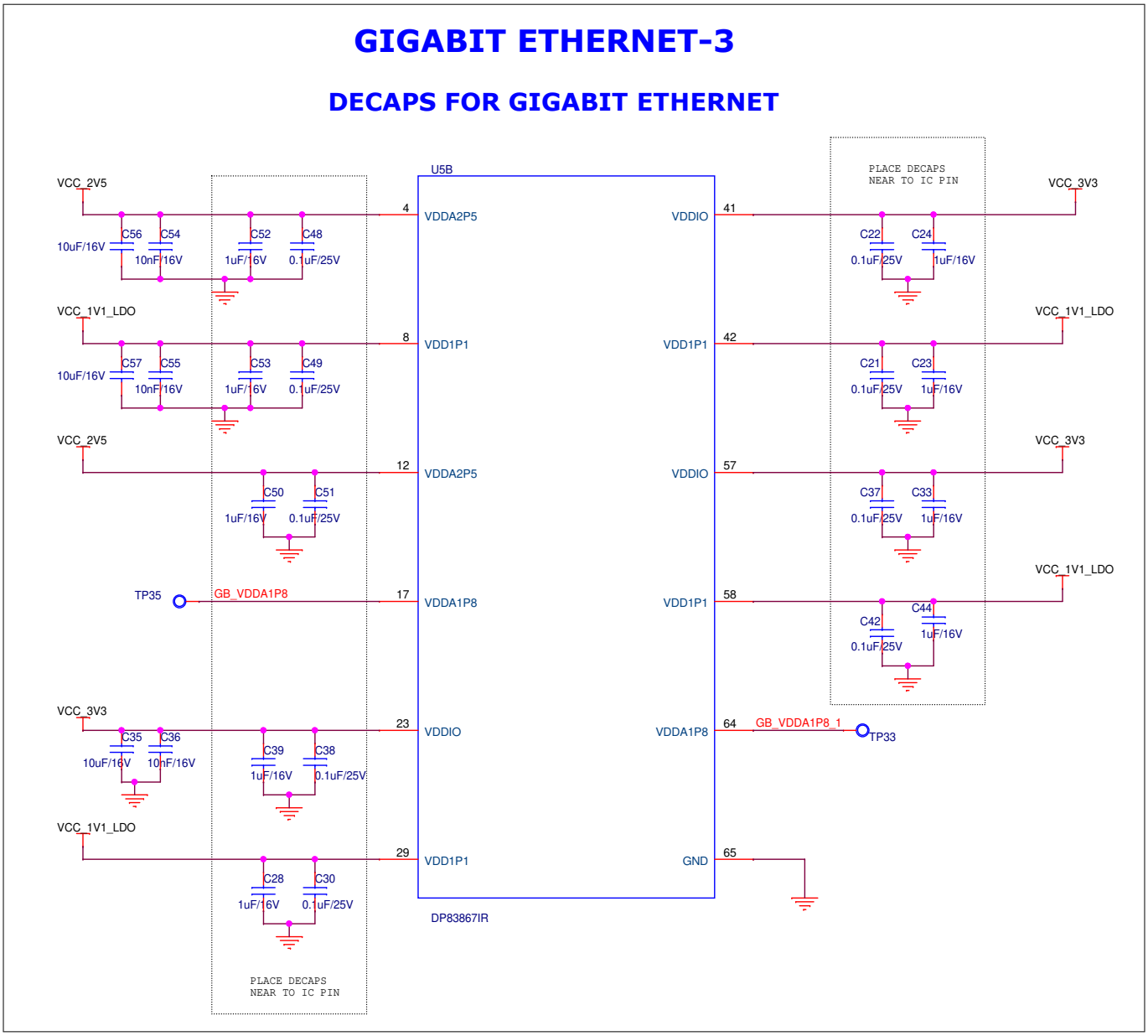

Figure 70 Gigabit Ethernet - 3

4 Kit design documents

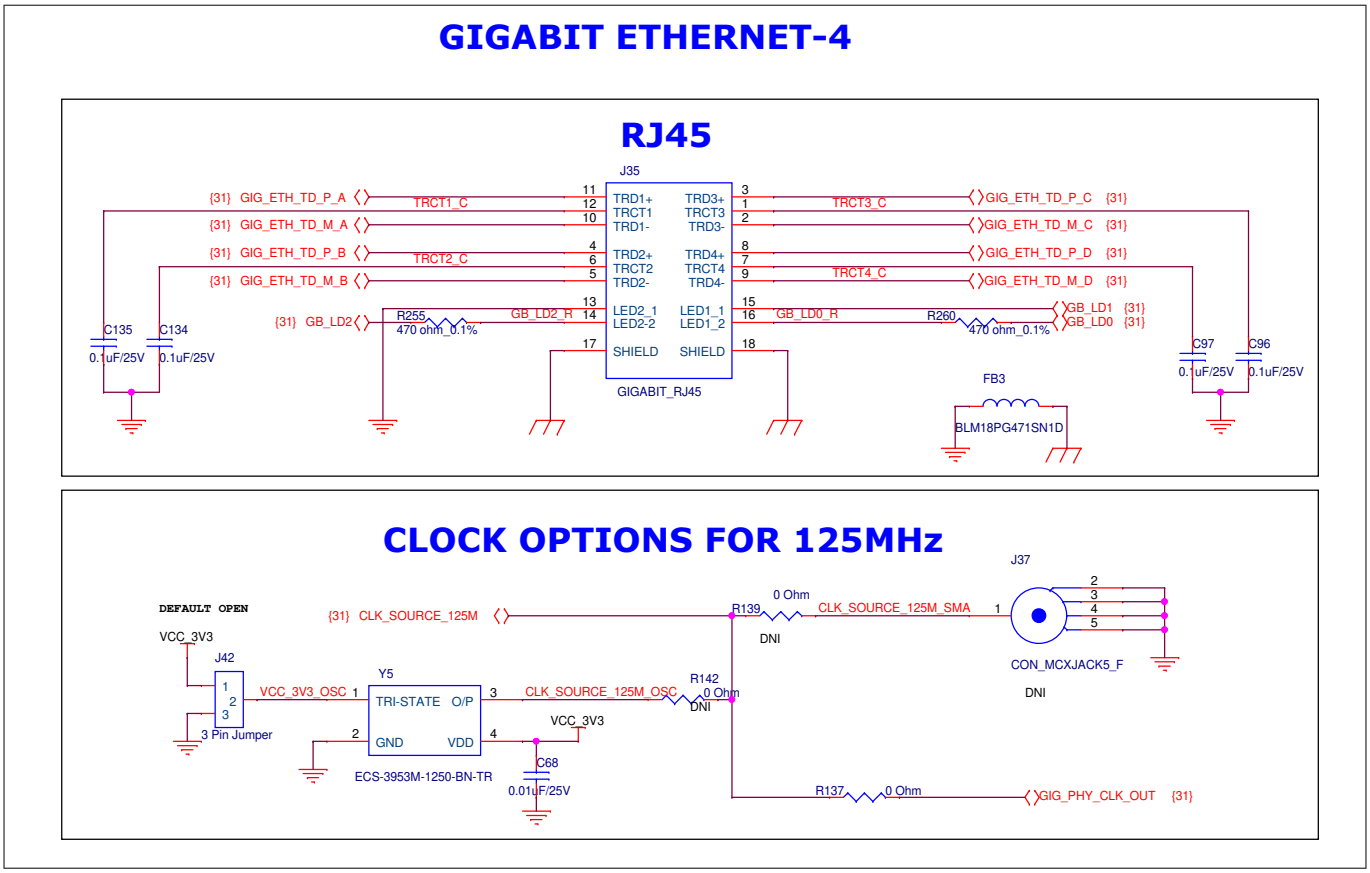

Figure 71 Gigabit Ethernet - 4

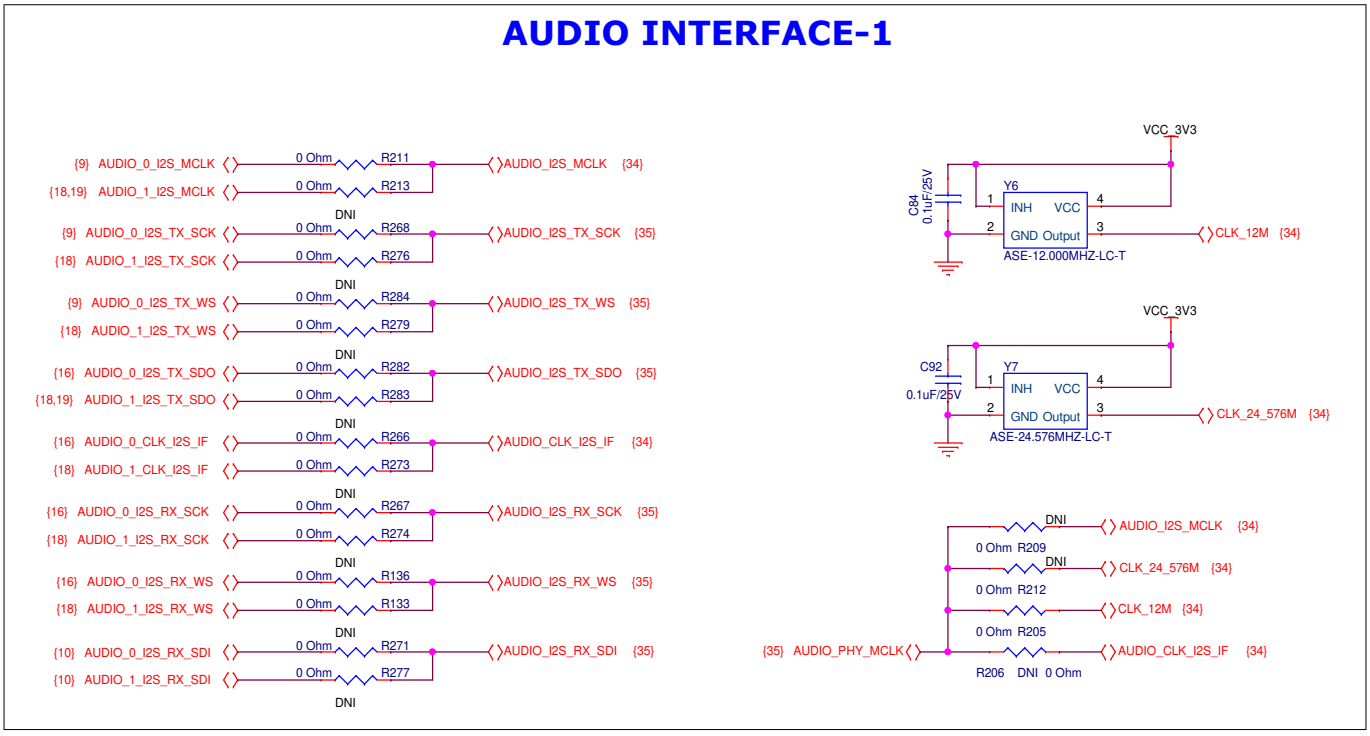

Figure 72 Audio interface - 1

4 Kit design documents

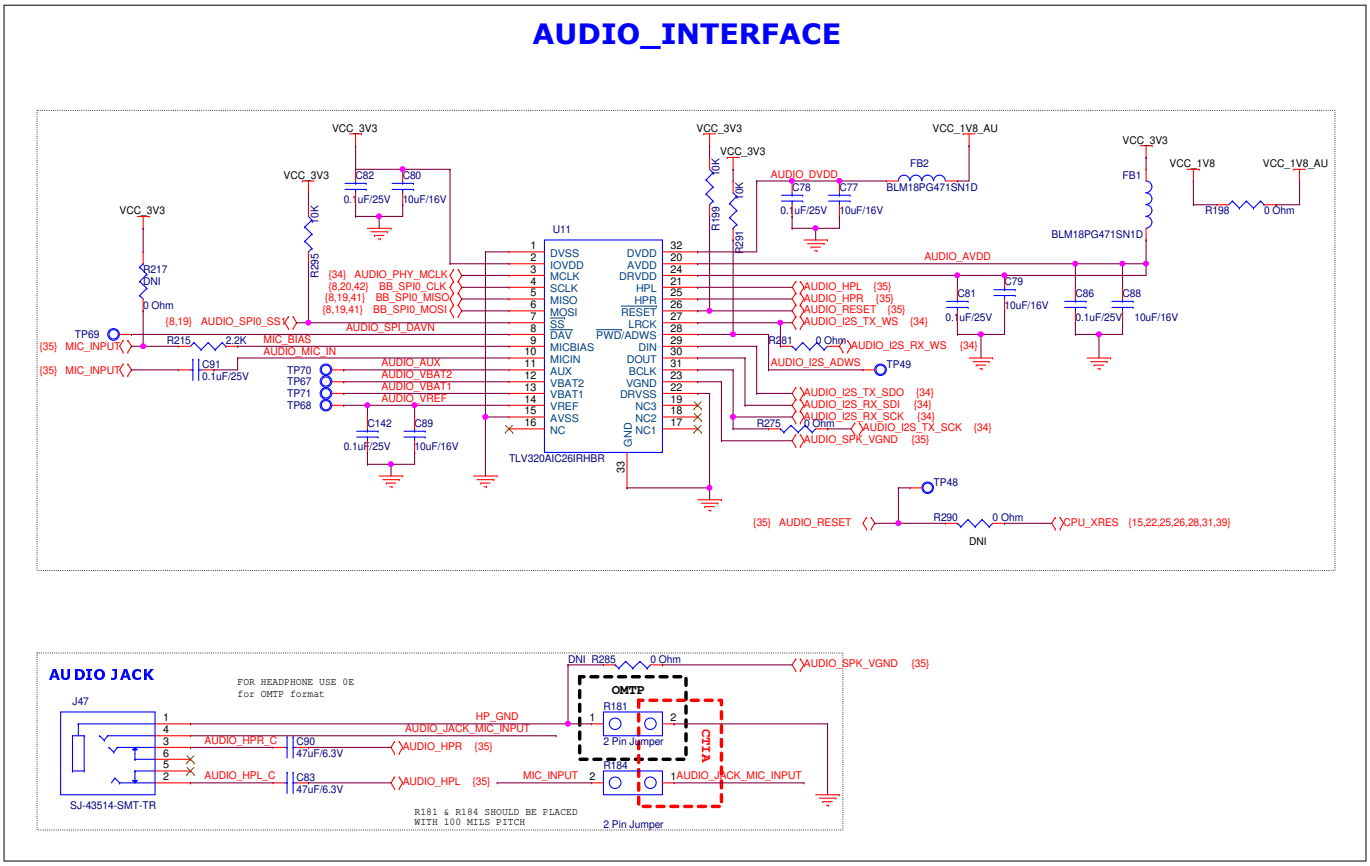

Figure 73 **Audio interface**

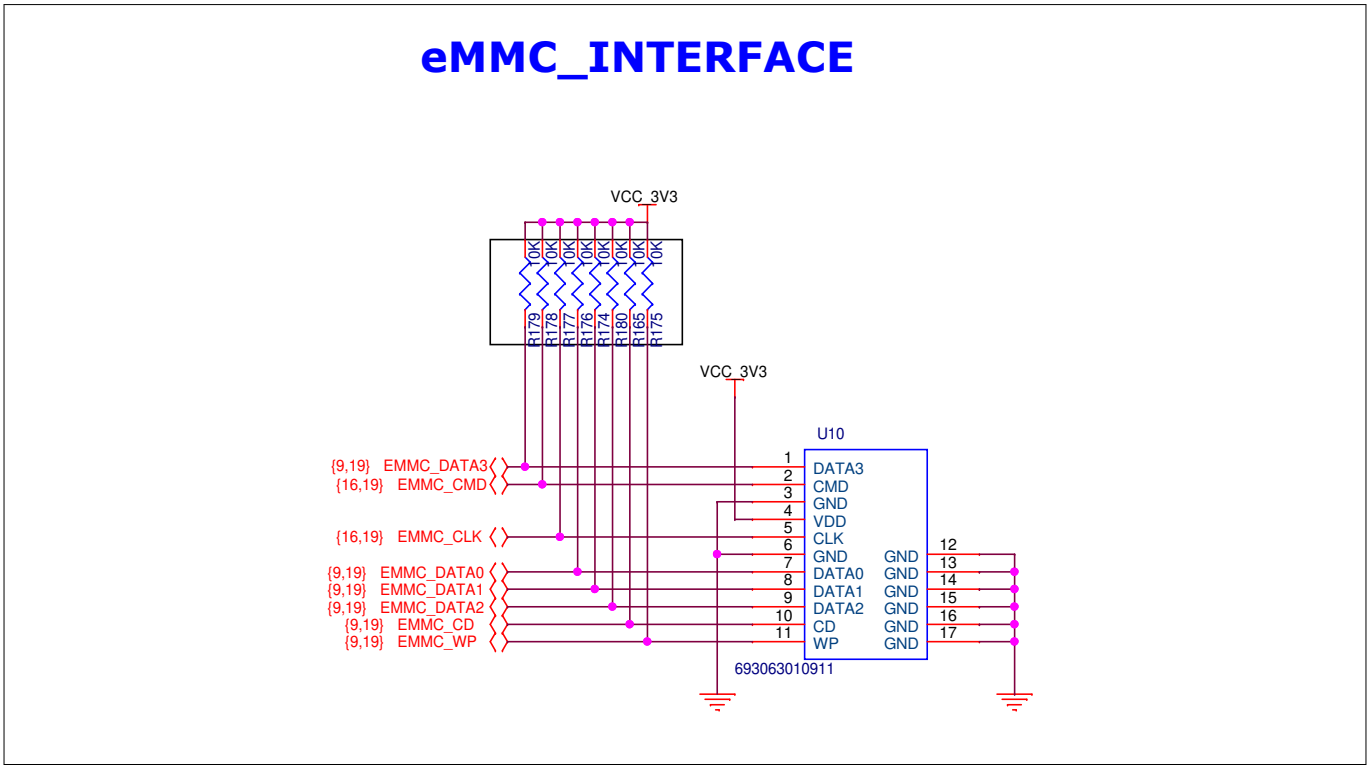

Figure 74 **eMMC interface**

4 Kit design documents

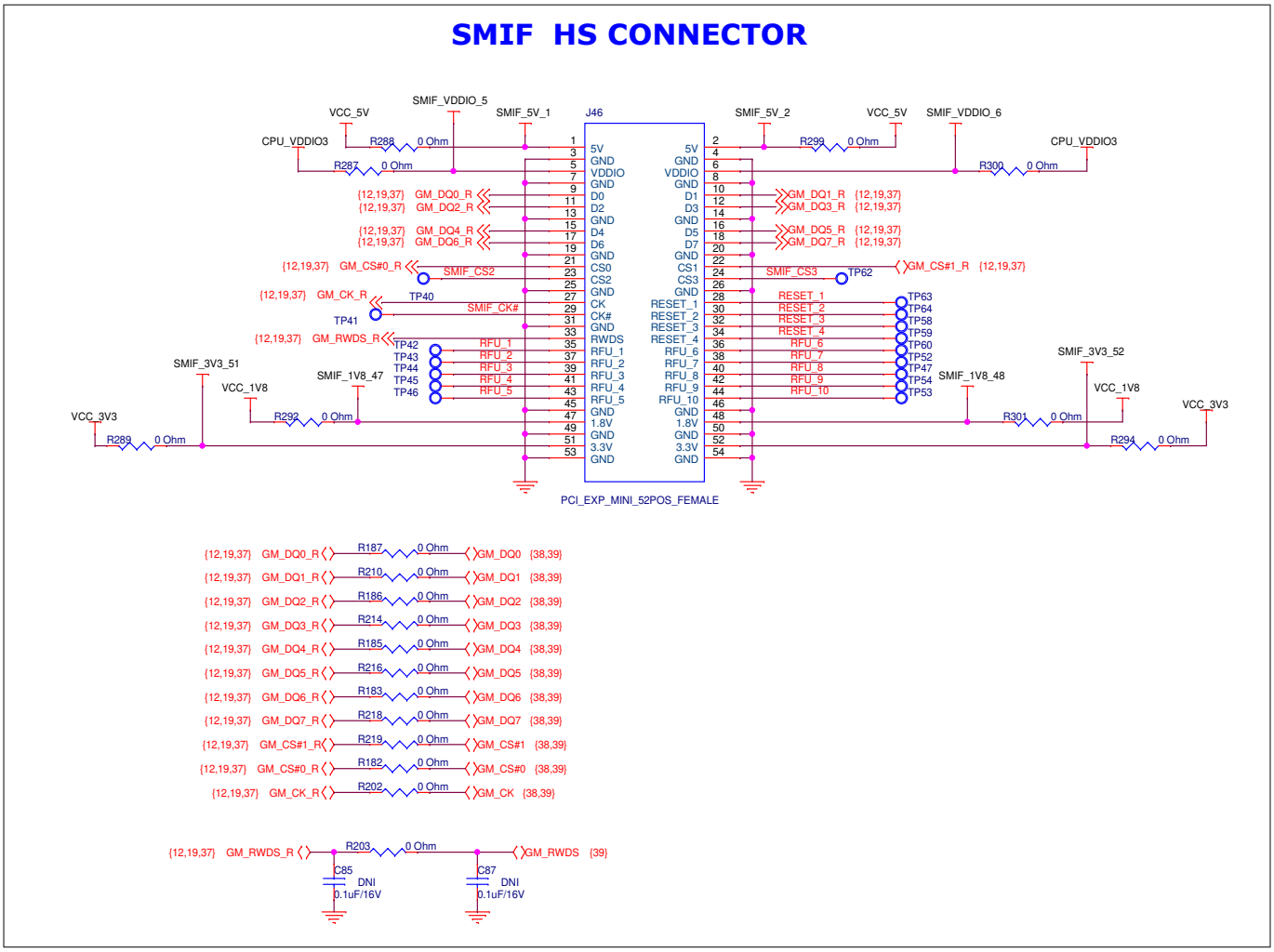

Figure 75 SMIF HS connector

4 Kit design documents

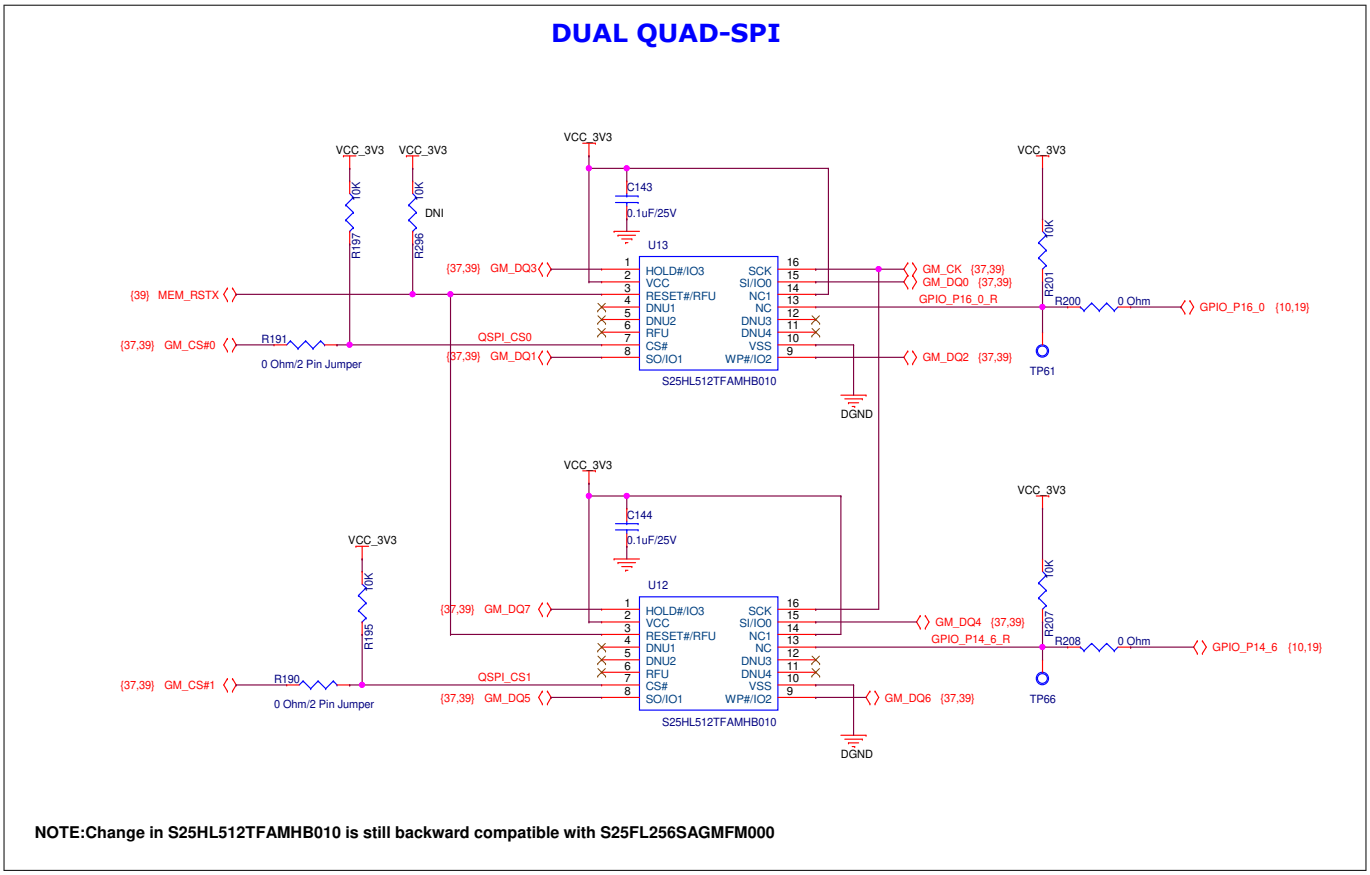

Figure 76 Dual quad-SPI

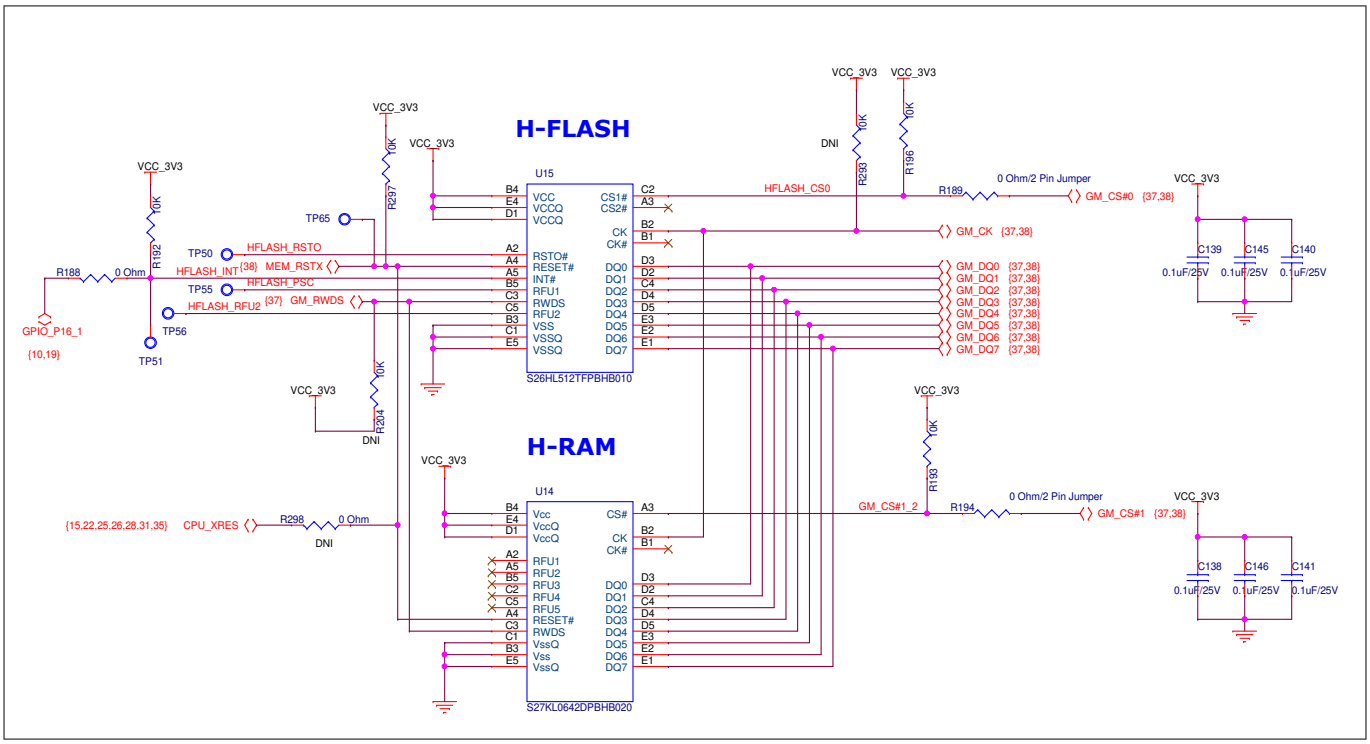

Figure 77 H-flash and H-RAM

4 Kit design documents

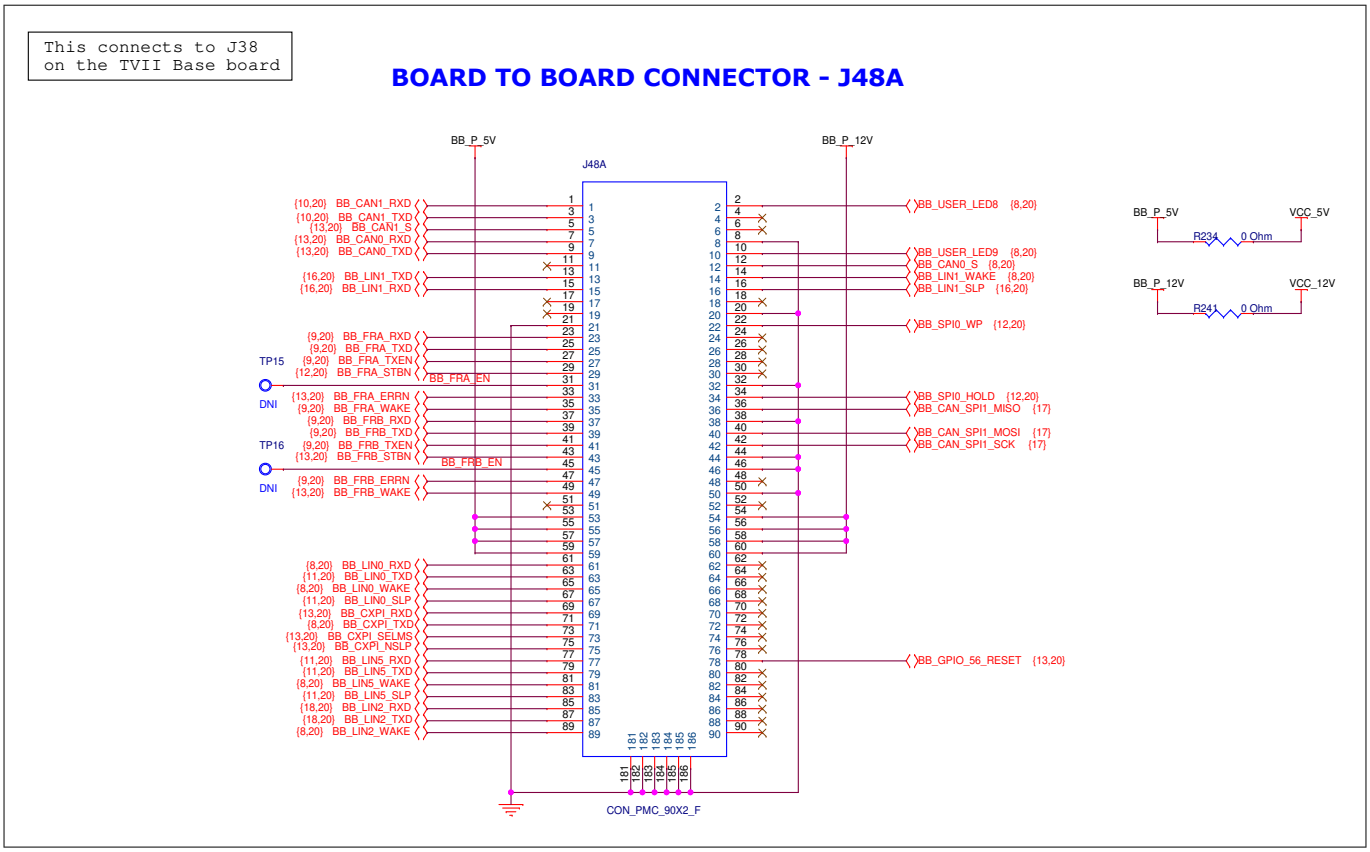

Figure 78 Board to board connector - J48A

4 Kit design documents

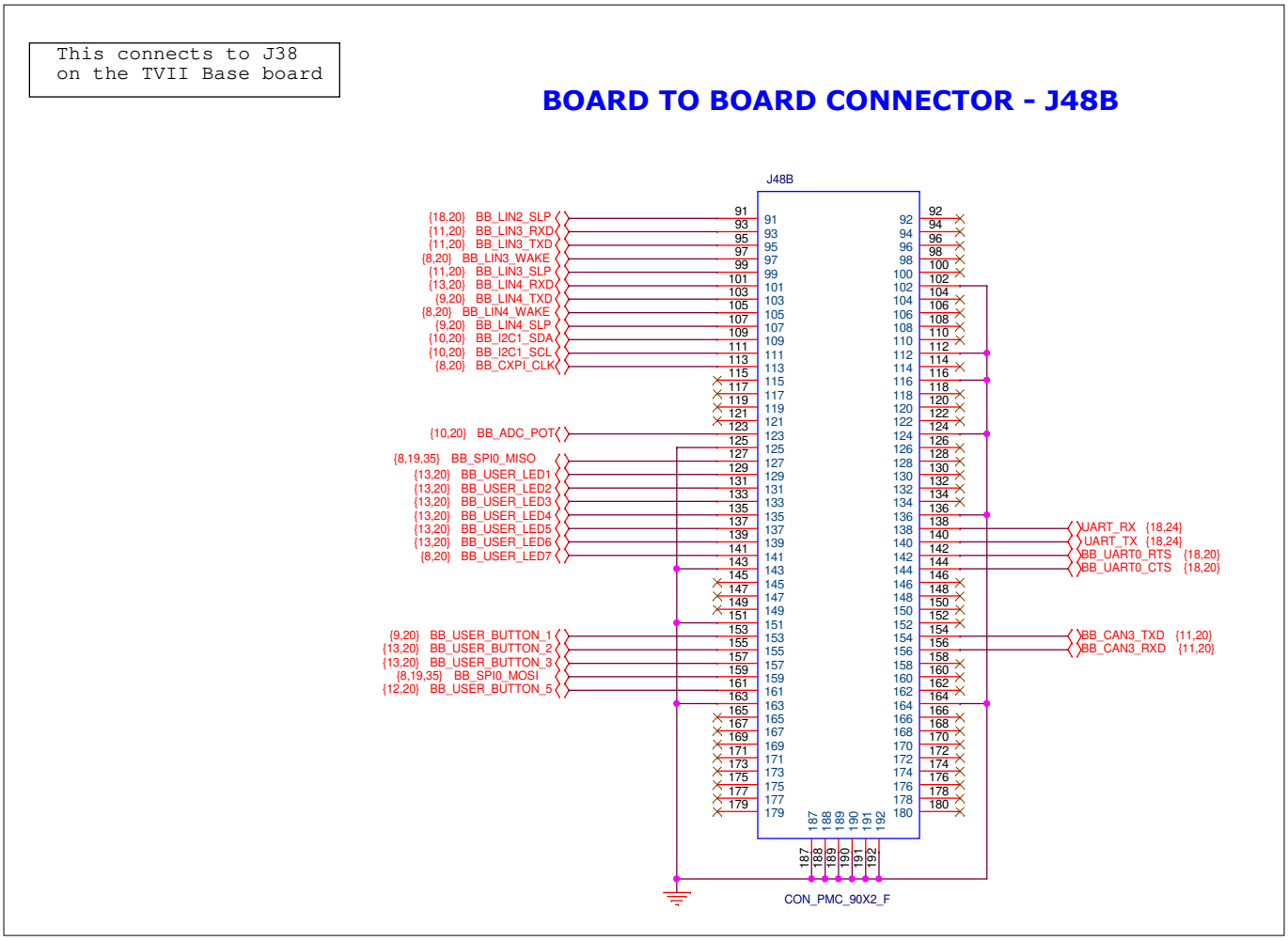

Figure 79 Board to board connector - J48B

4 Kit design documents

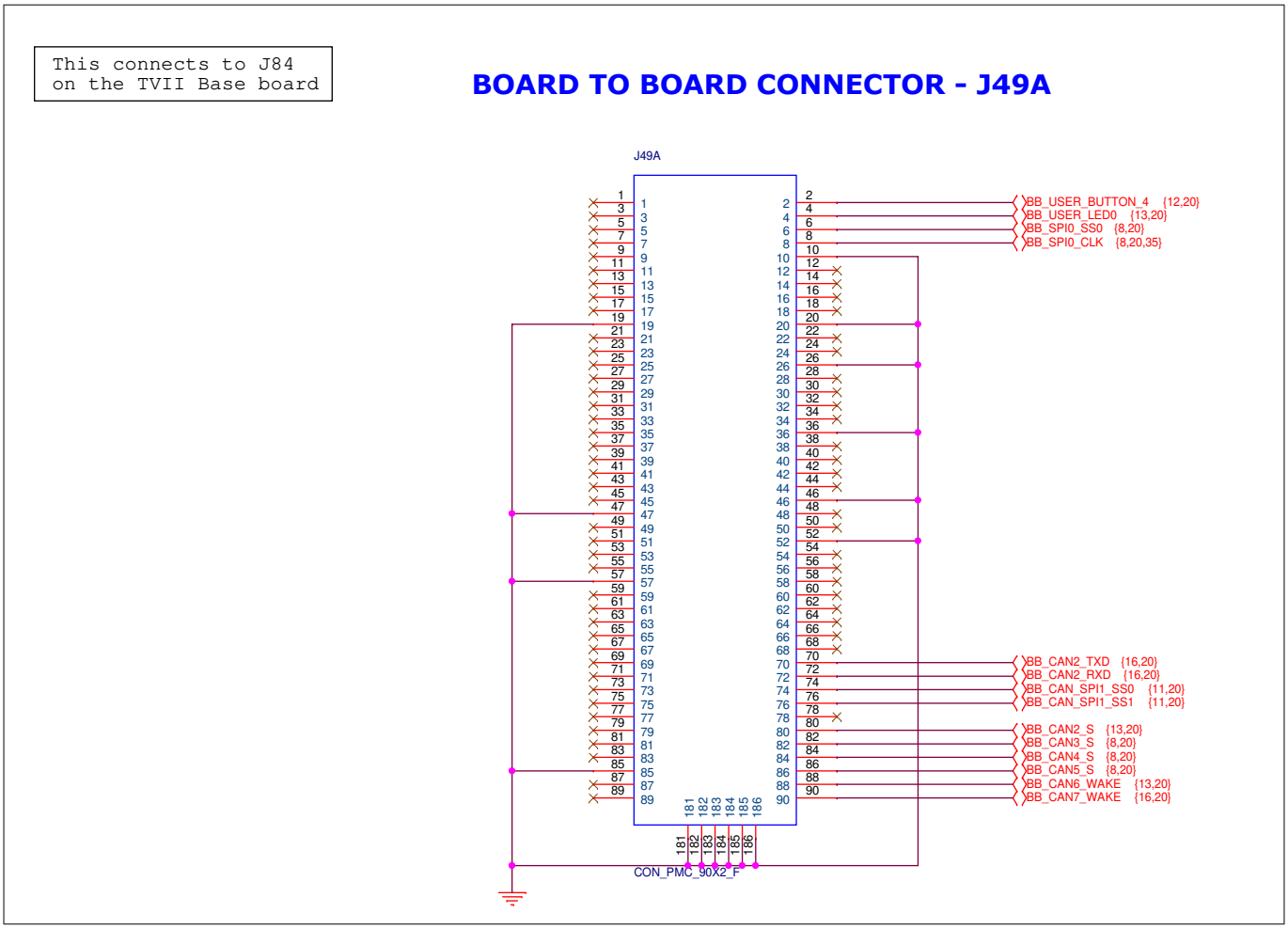

Figure 80 Board to board connector - J49A

4 Kit design documents

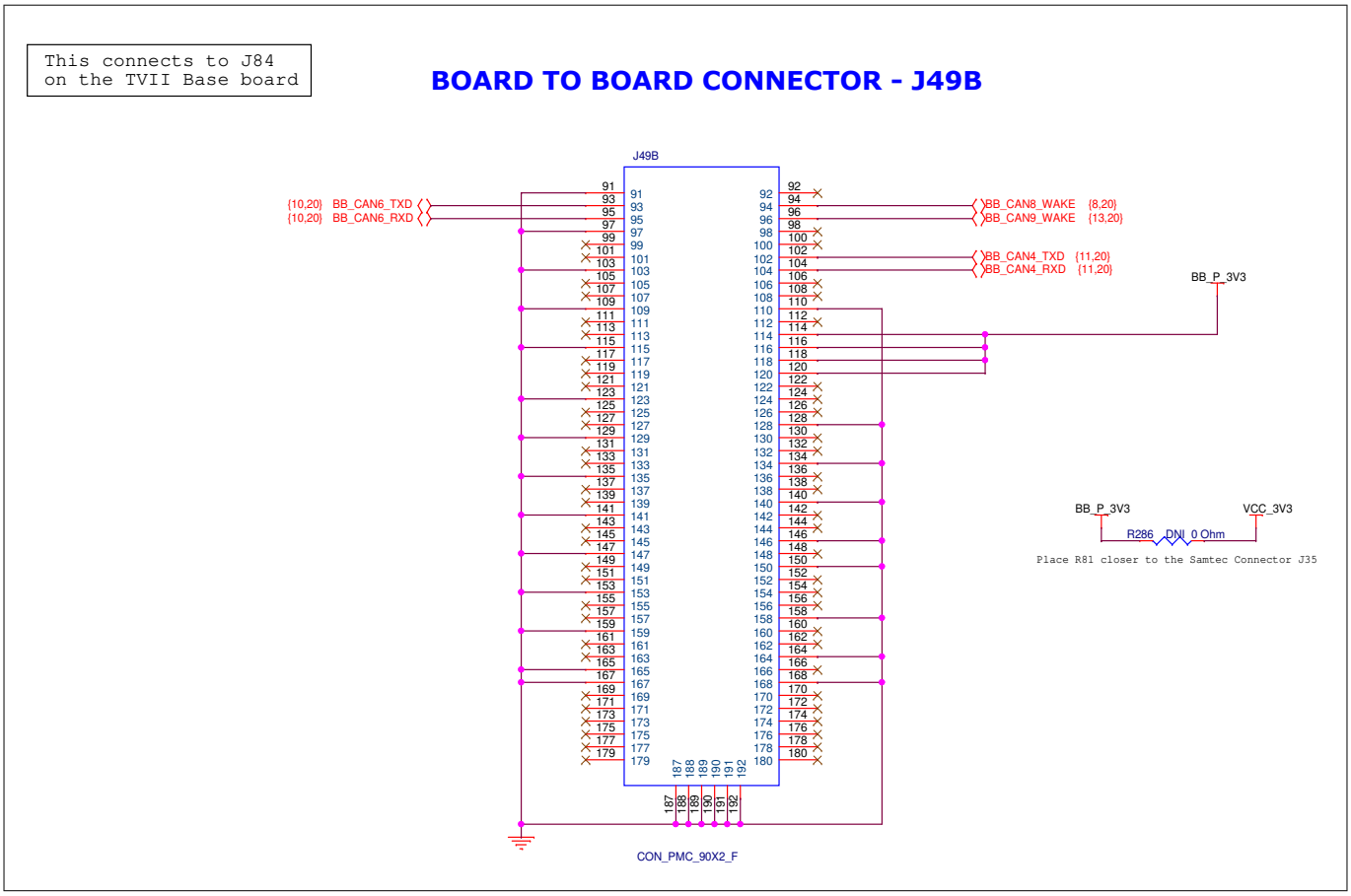

Figure 81 Board to board connector - J49B

4.3 Assembly drawings

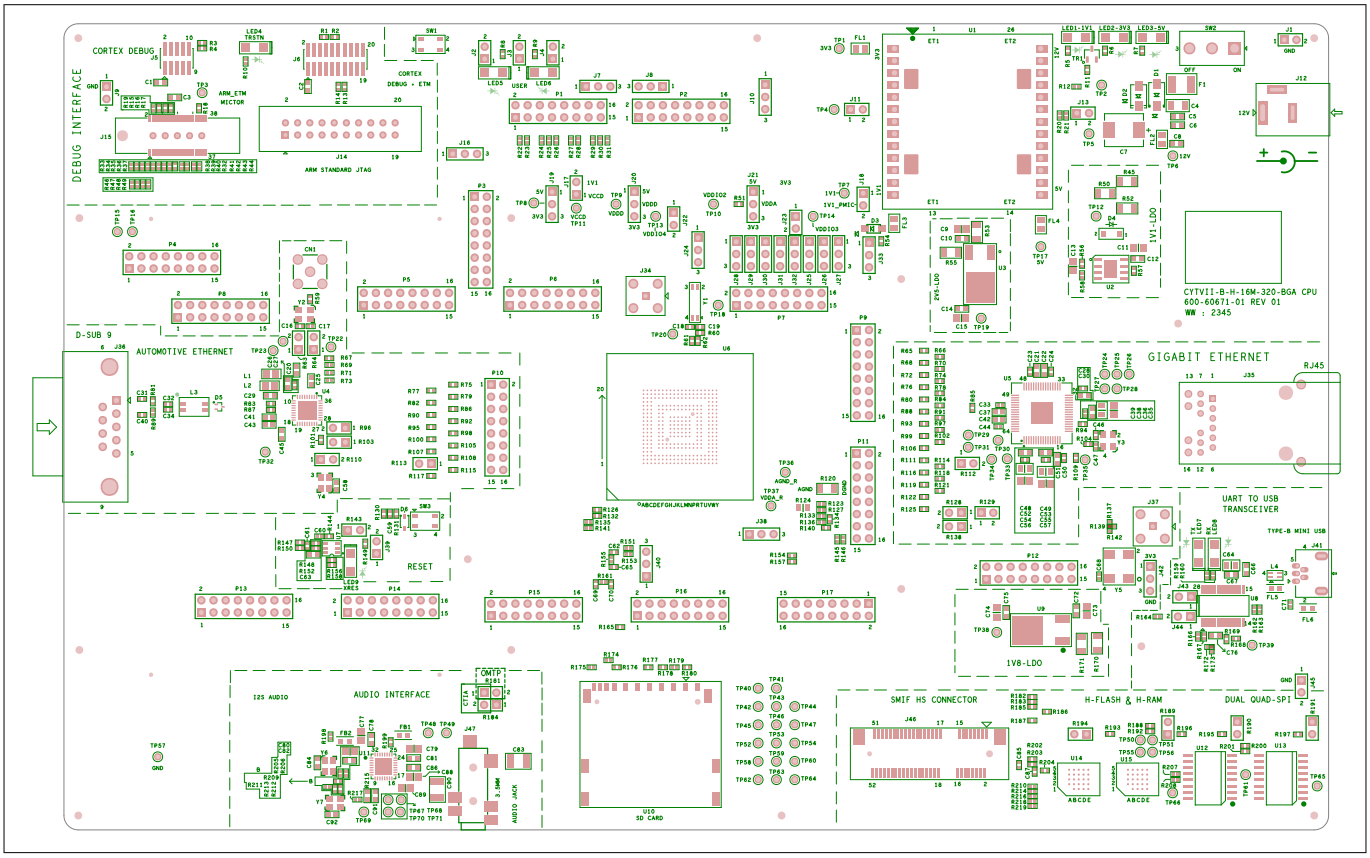

Figure 82 Assembly drawing - Top

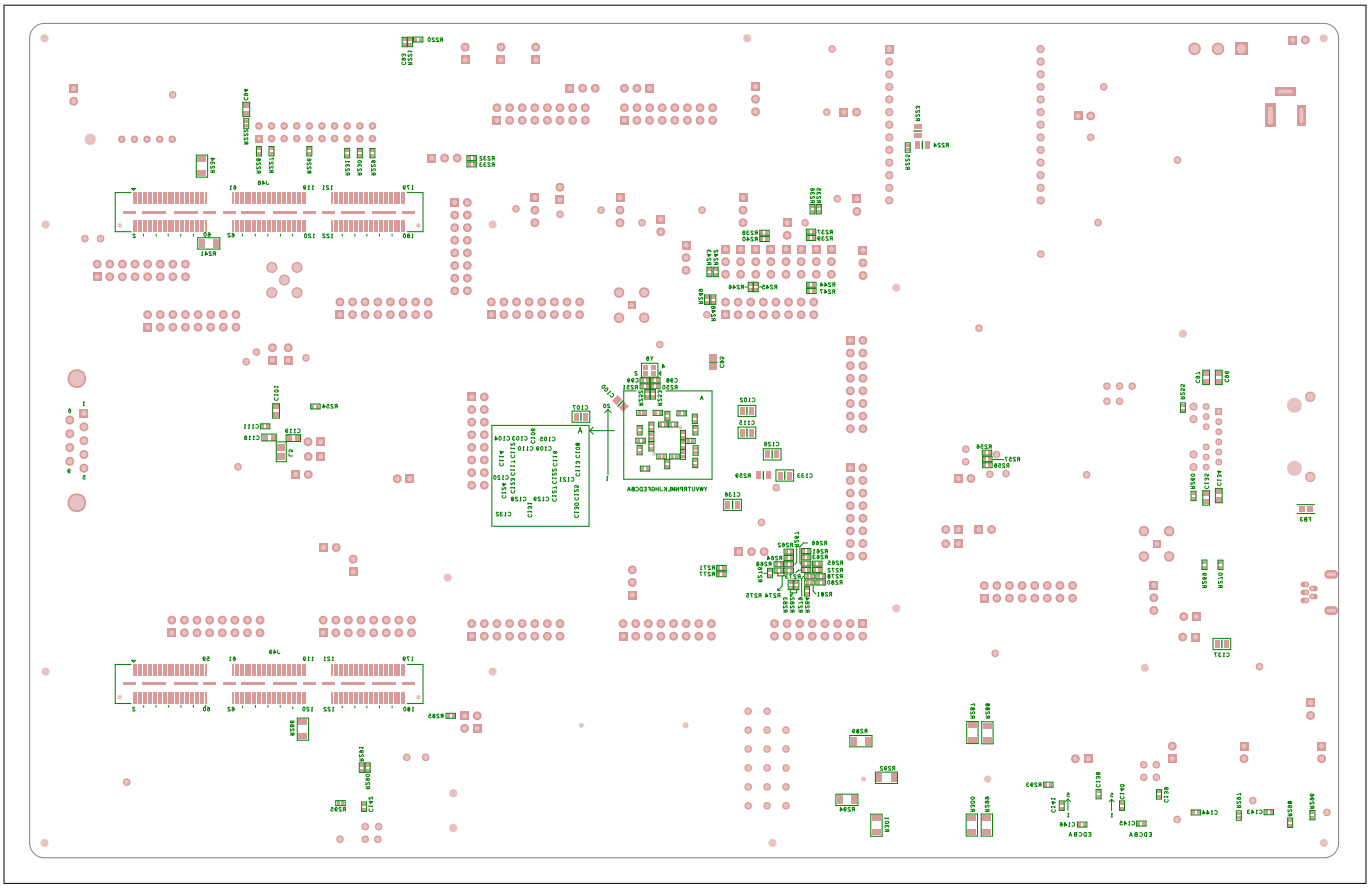

Figure 83 Assembly drawing - Bottom

4.4 Bill of materials

Item	Reference	Description	Manufacturer Part Number
1	C1,C2,C3,C6,C8,C10,C12,C14,C21,C22,C26,C29,C30,C37,C38,C41,C42,C43,C48,C49,C51,C58,C63,C67,C72,C75,C76,C78,C81,C82,C84,C86,C91,C92,C94,C96,C97,C101,C118,C119,C134,C135	CAP CER 0.1UF 10% 25V X7R 0603	06033C104K4T4A
2	C4	47 µF ±20% 25V Ceramic Capacitor X5R 1206 (3216 Metric)	GRM31CR61E476ME44K
3	C5,C66	CAP CER 1UF 10% 25V X7R 0603	CL10B105KA8VPNC
4	C7	CAP TANT 100UF 10% 25V 2924	TAJV107K025RNJ
5	C9,C11,C13,C15,C35,C56,C57,C73,C74,C77,C79,C80,C88,C89,C95,C100	CAP CER 10UF 10% 16V X5R 0805	CL21A106KOQNNNG
6	C16,C17	CAP CER 18PF 5% 50V C0G/NP0 0402	KGM05ACG1H180JH
7	C18,C19	CAP CER 12PF 2% 50V C0G/NP0 0402	KGM05ACG1H120GH

4 Kit design documents

Item	Reference	Description	Manufacturer Part Number
8	C20,C25,C45	CAP CER 0.47UF 10% 25V X5R 0603	CGB3B3X5R1E474K055AB
9	C23,C24,C28,C33,C39,C44,C50,C52,C53	1 µF ±20% 16V Ceramic Capacitor X5R 0402 (1005 Metric)	GRM155R61C105MA12D
10	C27	CAP CER 1000PF 10% 25V NP0 0402	C0402C102K3GAC7867
11	C31,C40	CAP CER 4700PF 10% 50V X7R 0402	GCM155R71H472KA37D
12	C32,C34,C59,C93,C103,C104,C105,C106,C108,C109,C110,C112,C113,C114,C116,C117,C120,C122,C123,C124,C125,C127,C128,C129,C130,C131,C132	CAP CER 0.1UF 10% 16V X7R 0402	GCM155R71C104KA55D
13	C36,C54,C55	CAP CER 10000PF 5% 16V NPO 0805	CC0805JKNPO7BN103
14	C46,C47	CAP CER 27PF 5% 50V C0G/NP0 0402	GCM1555C1H270JA16D
15	C61	CAP CER 1000PF 10% 16V X7R 0402	AC0402KRX7R7BB102
16	C64,C126,C137	CAP CER 4.7UF 10% 16V X7R 0805	CGA4J3X7R1C475K125AB
17	C68,C71,C111,C121	CAP CER 10000PF 10% 25V X7R 0402	GCM155R71E103KA37D
18	C83,C90	CAP CERAMIC 47uF 6.3V 10% X7R 1210	GCJ32ER70J476KE01L
19	C98,C99	CAP CER 10PF 5% 25V C0G/NP0 0402	C0402C100J3GACTU
20	C102,C107,C115,C133,C136	CAP CER 2.2UF 10% 16V X7R 0805	CGA4J3X7R1C225K125AB
21	C138,C139,C140,C141,C142,C143,C144,C145,C146	0.1 µF -20%, +80% 25V Ceramic Capacitor Y5V (F) 0402 (1005 Metric)	CC0402ZRY5V8BB104
22	D1	DIODE SCHOTTKY 20V 1A SMA	B120-13-F
23	D2	TVS DIODE 12V 19.9V SMA	SMAJ12CA-13-F
24	D3	DIODE SCHOTTKY 100V 1A SOD123FL	RB168MM100TR
25	D4	DIODE SCHOTTKY 20V 500MA SOD123	B0520LW-7-F
26	D5	TVS DIODE 5V 20V 1A SC75	RCLAMP0582BQTCT
27	D6	TVS DIODE 5V 18V SOD323	SD05C-01FTG
28	FBD1	Fab Dwg: 610-xxxxx-01	

4 Kit design documents

Item	Reference	Description	Manufacturer Part Number
29	FB1,FB2,FB3	FERRITE BEAD 470 OHM 0603 1LN	BLM18PG471SN1D
30	FL1,FL2,FL3,FL4	FERRITE BEAD 30 OHM 0805 1LN	BLM21PG300SH1D
31	FL5,FL6	FERRITE BEAD 600 OHM 0603 1LN	BLM18HE601SN1D
32	F1	PTC RESET FUSE 12V 1.6A 1812	1812L160/12DR
33	J1,J2,J3,J4,J9,J11,J13,J17,J18,J22,J23,J39,J43,J44,J45	CONN HEADER VERT 2POS	GEC01DAAN
34	J5	CONN HEADER SMD 10POS 1.27MM	FTSH-105-01-L-DV-K
35	J6	CONN HEADER SMD 20POS 1.27MM	FTSH-110-01-L-DV-K
36	J7,J8,J10,J16,J19,J20,J21,J24,J25,J26,J27,J28,J29,J30,J31,J32,J33,J38,J40,J42	CONN HEADER VERT 3POS 2.54MM	77311-818-03LF
37	J12	CONN PWR JACK 2X5.5MM SOLDER	RAPC722X
38	J14	CONN HEADER VERT 20POS 2.54MM	HIF3FC-20PA-2.54DSA(71)
39	J15	CONN RECEPT 38POS .025 VERT SMD	2-5767004-2
40	J35	CONN MAGJACK 1PORT 1000 BASE-T	0826-1X1T-32-F
41	J36	CONN D-SUB PLUG 9POS R/A SOLDER	183-009-113R531
42	J41	CONN RCPT USB2.0 MINI B 5P R/A	54819-0519
43	J47	CONN JACK 4COND 3.5MM SMD R/A	SJ-43514-SMT-TR
44	J48,J49	CONN RCPT HI-SPD .5MM 180POS DL	QSH-090-01-L-D-A
45	LBLW1	LBL, Anti-Static Warning, "Attention Observe Precautions"	
46	LBL1	LBL, Kit Product Identification Label, Vendor Code, Datecode, Serial Number	
47	LED1,LED2,LED3,LED4,LED5,LED6,LED7,LED8,LED9	LED GREEN CLEAR 1206 SMD	LTST-C150GKT

4 Kit design documents

Item	Reference	Description	Manufacturer Part Number
48	L1,L2,L5	FERRITE BEAD 100 OHM 0805 1LN	MPZ2012S101AT000
49	L3	CMC 200UH 100MA 2LN SMD AEC-Q200	ACT45L-201-2P-TL000
50	L4	CMC 330MA 2LN 90 OHM SMD	DLW21SN900SQ2L
51	MH1,MH2,MH3,MH4,MH5,MH6	HEX STANDOFF #4-40 ALUM 5/16"	2101-440-AL
52	MH1A,MH2A,MH3A,MH4A,MH5A,MH6A	MACHINE SCREW PAN PHILLIPS 4-40	9900
53	PA1	AC/DC WALL MOUNT ADAPTER 12V 12W	VER12US120-JA
54	P1,P2,P3,P4,P5,P6,P7,P8,P9,P10,P11,P12,P13,P14,P15,P16,P17	CONN HEADER 16POS .100" DL GOLD	TSW-108-14-G-D
55	R1,R3,R16,R17,R25,R27,R29,R30,R31,R35,R51,R57,R59,R60,R61,R62,R65,R66,R68,R70,R72,R74,R75,R76,R77,R78,R79,R80,R82,R84,R86,R88,R90,R91,R92,R93,R95,R97,R98,R99,R100,R102,R104,R105,R106,R107,R108,R111,R114,R115,R116,R117,R118,R119,R121,R122,R123,R125,R126,R127,R132,R134,R135,R136,R137,R140,R141,R145,R146,R147,R151,R153,R154,R155,R157,R161,R166,R167,R172,R182,R183,R185,R186,R187,R188,R198,R200,R202,R203,R205,R208,R210,R211,R214,R216,R218,R219,R222,R225,R228,R231,R233,R236,R237,R238,R240,R243,R244,R245,R246,R247,R249,R250,R252,R253,R254,R261,R262,R263,R264,R265,R266,R267,R268,R271,R272,R275,R278,R280,R281,R282,R284	RES SMD 0 OHM 1/10W 0402	ERJ-2GE0R00X
56	R5,R6,R7,R158,R269,R270	RES SMD 220 OHM 5% 1/10W 0402	ERJ-2GEJ221X
57	R8,R9,R10,R56,R148,R149,R152,R164	RES SMD 1K OHM 5% 1/16W 0402	RC0402JR-071KL
58	R11	RES SMD 470 OHM 5% 1/10W 0402	ERJ-2GEJ471X
59	R15,R18,R33,R42,R44,R49,R58,R69,R85,R94,R130,R156,R165,R174,R175,R176,R177,R178,R179,R180,R192,R193,R195,R196,R197,R199,R201,R207,R221,R229,R230,R256,R258,R291,R295,R297	RES SMD 10K OHM 5% 1/16W 0402	CRG0402J10K/10

4 Kit design documents

Item	Reference	Description	Manufacturer Part Number
60	R19,R32,R220,R226	RES SMD 20 OHM 5% 1/10W 0402	ERJ-2GEJ200X
61	R50,R53,R171,R234,R241,R287,R288, R289,R292,R294,R299,R300,R301	RES SMD 0 OHM 1/4W 1206	AC1206JR-070RL
62	R63,R64,R96,R103,R110	CONN HEADER VERT 2POS 2.54MM	TSW-102-23-F-S
63	R71,R73	RES SMD 10K OHM 1% 1/16W 0402	CRCW040210K0FKED
64	R81,R89	RES 1K OHM 1% 1/16W 0402	RC0402FR-071KL
65	R83,R87	RES 0 OHM JUMPER 1/16W 0402	NRC04ZOTRF
66	R101	RES SMD 20 OHM 1% 1/16W 0402	RMCF0402FT20R0
67	R109	RES SMD 11K OHM 0.1% 1/16W 0402	ERA-2AEB113X
68	R112,R113,R129,R138,R189,R190,R19 1,R194	RES 0 OHM JUMPER 1/10W	TSW-102-23-F-S
69	R120	RES SMD 0 OHM JUMPER 1/4W 1206	AC1206JR-070RL
70	R124,R224,R259	RES SMD 0 OHM 1/8W 0805	RC0805JR-070RL
71	R131	RES SMD 100 OHM 1% 1/16W 0402	RC0402FR-07100RL
72	R144	RES SMD 22K OHM 5% 1/10W 0402	ERJ-2GEJ223X
73	R181,R184	CONN HEADER VERT 2POS	TSW-102-23-F-S
74	R215	RES SMD 2.2K OHM 5% 1/10W 0603	ERJ-3GEYJ222V
75	R255,R260	RES SMD 470 OHM 0.1% 1/16W 0402	ERA-2ARB471X
76	SW1,SW3	SWITCH TACTILE SPST-NO 0.05A 16V	PTS810 SJG 250 SMTR LFS
77	SW2	SWITCH SLIDE SPDT 5A 120V	500SSP1S2M2QEA
78	TR1	TRANS NPN 50V 0.15A S-MINI	2SC2712-GR,LF
79	UC1	CABLE MINI USB 5PIN 1M 2.0 VERS	AK672M/2-1
80	U1	PWR 3CH 5.xV 3.xV 1.xV MODULE	CYALKIT-A18

4 Kit design documents

Item	Reference	Description	Manufacturer Part Number
81	U2	IC REG LINEAR POS ADJ 1A 8SOIC	NR301E
82	U3	IC REG LINEAR 2.5V 1A DPAK	NCV1117DT25RKG
83	U4	IC TXRX FULL/HALF 1/1 36HVQFN	TJA1101BHN/0Z
84	U5	IC ETHERNET PHY 64HTQFP	DP83867IRPAPR
85	U6	32-bit Arm® Cortex®-M7 microcontroller	CYT6BJCDHAES
86	U6X	SOCKET_320BGA	SOCKET_320BGA
87	U7	IC SUPERVISOR 1 CHANNEL SOT23-6	TPS3808G01QDBVRQ1
88	U8	IC USB-SERIAL PART 28SSOP	CY7C65213-28PVXI
89	U9	IC REG LINEAR 1.8V 1A DPAK	NCV1117DT18T5G
90	U10	CONN SD/MMC CARD PUSH-PULL R/A	6.93063E+11
91	U11	IC STEREO AUDIO CODEC LP 32-VQFN	TLV320AIC26IRHBR
92	U12,U13	IC FLASH 512MBIT SPI/QUAD 16SOIC	S25HL512TFAMHB010
93	U14	IC PSRAM 64MBIT HYPERBUS™ 24FBGA	S27KL0642DPBHB020
94	U15	IC FLASH 512MBIT HYPERBUS™ 24FBGA	S26HL512TFPBHB010
95	U2X1,U2X2	CONN HDR 13POS 0.1 GOLD PCB	PPPC181LFBN-RC
96	U6X1	SOCKET_COVER_320BGA	SOCKET_COVER_320BGA
97	Y1	CRYSTAL 32.7680 KHZ 12.5PF SMD	MC-146 32.7680KA-A0:ROHS
98	Y2,Y3	CRYSTAL 25.0000MHZ 18PF SMD	ABM8-25.000MHZ-B2-T
99	Y4	XTAL OSC XO 50.0000MHZ CMOS SMD	SXO32C3A161-50.000M
100	Y5	XTAL OSC XO 125.0000MHZ HCMOS	ECS-3953M-1250-BN-TR
101	Y6	XTAL OSC XO 12.0000MHZ CMOS SMD	ASE-12.000MHZ-LC-T

Item	Reference	Description	Manufacturer Part Number
102	Y7	XTAL OSC XO 24.5760MHZ CMOS SMD	ASE-24.576MHZ-LC-T
103	Y8	CRYSTAL 16.0000MHZ 10PF SMD	ABM10-16.000MHZ-D30-T3

4.5 Pin out details

This section provides information about the primary on board functionalities of the TRAVEO™ T2G B-H-16M 320 CPU pins on the evaluation Board, as well as details about pins and where these pins are routed on the board.

Table 2 Pinout

SL. No.	MCU PORT PIN	Schematic Net Name	Test Points
1	P0[0]	CB_LED_P0_0	P1.4
2	P0[1]	GPIO_P0_1	P14.2
3	P0[2]	GPIO_P0_2	P14.7
4	P0[3]	GPIO_P0_3	P14.4
5	P1[0]	BB_CAN5_S	P13.7
6	P1[1]	BB_CAN4_S	P13.9
7	P1[2]	BB_LIN0_RXD	P6.9
8	P1[3]	BB_LIN5_WAKE	P6.10
9	P1[4]	BB_LIN4_WAKE	P6.8
10	P1[5]	GPIO_P1_5	P1.6
11	P1[6]	GPIO_P1_6	P1.10
12	P2[0]	TRSTN_PRM	R233
13	P2[1]	GPIO_P2_1	P14.9
14	P2[2]	AUTO_ETH_RXER_R	P10.13
15	P2[3]	GPIO_P2_3	P14.12
16	P2[4]	BB_LIN3_WAKE	P6.7
17	P2[5]	GPIO_P2_5	P1.11
18	P2[6]	BB_LIN2_WAKE	P6.6
19	P2[7]	BB_USER_LED9	P5.12
20	P3[0]	AUTO_ETH_MDIO_R	P10.15
21	P3[1]	AUTO_ETH_MDC_R	P10.16
22	P3[2]	BB_CAN3_S	P13.13
23	P3[3]	BB_CXPI_TXD	P5.16
24	P3[4]	BB_LIN1_WAKE	P5.13
25	P3[5]	BB_USER_LED8	P5.11

(table continues...)

Table 2 (continued) Pinout

SL. No.	MCU PORT PIN	Schematic Net Name	Test Points
26	P3[6]	BB_LIN0_WAKE	P5.15
27	P3[7]	BB_USER_LED7	P5.10
28	P4[0]	BB_SPI0_MISO	P15.9
29	P4[1]	BB_SPI0_MOSI	P15.12
30	P4[2]	BB_SPI0_CLK	P14.1
31	P4[3]	BB_SPI0_SS0	P14.11
32	P4[4]	AUDIO_SPI0_SS1	P15.11
33	P4[5]	BB_CAN0_S	P8.2
34	P4[6]	BB_CXPI_CLK	P8.13
35	P5[0]	GPIO_P5_0	P15.4
36	P5[1]	GPIO_P5_1	P15.3
37	P5[2]	GPIO_P5_2	P15.2
38	P5[3]	GPIO_P5_3	P15.6
39	P5[4]	BB_CAN8_WAKE	P14.13
40	P5[5]	BB_FRB_ERRN	P8.12
41	P6[0]	GPIO_P6_0	P15.5
42	P6[1]	GPIO_P6_1	P15.8
43	P6[2]	EMMC_WP	P16.2
44	P6[3]	GPIO_P6_3	R135, R141
45	P6[4]	GPIO_P6_4	R132, R126
46	P6[5]	EMMC_CD	P16.1
47	P6[6]	BB_FRA_WAKE	P8.10
48	P6[7]	BB_USER_BUTTON_1	P3.14
49	P7[0]	GPIO_P7_0	P16.15
50	P7[1]	EMMC_DATA0	P16.6
51	P7[2]	EMMC_DATA1	P16.5
52	P7[3]	EMMC_DATA2	P16.8
53	P7[4]	EMMC_DATA3	P16.7
54	P7[5]	GPIO_P7_5	P16.10
55	P7[6]	BB_LIN4_TXD	P5.3
56	P7[7]	BB_LIN4_SLP	P5.2
57	P8[0]	GPIO_P8_0	P15.1
58	P8[1]	GPIO_P8_1	P16.14

(table continues...)

Table 2 (continued) Pinout

SL. No.	MCU PORT PIN	Schematic Net Name	Test Points
59	P8[2]	GPIO_P8_2	P17.2
60	P8[3]	GPIO_P8_3	P15.16
61	P8[4]	GPIO_P8_4	P15.13
62	P9[0]	GPIO_P9_0	P16.11
63	P9[1]	GPIO_P9_1	P15.15
64	P9[2]	GPIO_P9_2	P17.6
65	P9[3]	GPIO_P9_3	P16.16
66	P10[0]	GPIO_P10_0	P1.14
67	P10[1]	GPIO_P10_1	P16.13
68	P10[2]	BB_FRA_RXD	P13.4
69	P10[3]	BB_FRA_TXD	P13.2
70	P10[4]	BB_FRA_TXEN	P4.12
71	P10[5]	BB_FRB_RXD	P4.11
72	P10[6]	BB_FRB_TXD	P3.3
73	P10[7]	BB_FRB_TXEN	P4.14
74	P11[0]	AUDIO_0_I2S_MCLK	R211
75	P11[1]	AUDIO_0_I2S_TX_SCK	R268
76	P11[2]	AUDIO_0_I2S_TX_WS	R284
77	P12[0]	GPIO_P12_0	R154, R157
78	P12[1]	GPIO_P12_1	R263, R261
79	P12[2]	GPIO_P12_2	R264, R262
80	P12[3]	GPIO_P12_3	R140, R134
81	P12[4]	AUDIO_0_I2S_RX_SDI	R271
82	P12[5]	GPIO_P12_5_R	P16.9
83	P12[6]	BB_ADC_POT	P8.7
84	P12[7]	GPIO_P12_7_R	P16.12
85	P13[0]	GPIO_P13_0	J40.2
86	P13[1]	GPIO_P13_1	J38.2
87	P13[2]	GPIO_P13_2	R278, R280
88	P13[3]	GPIO_P13_3	R153, 151
89	P13[4]	GPIO_P13_4	R272, R265
92	P13[5]	GPIO_P13_5	R145, R146
91	P13[6]	GPIO_P13_6	R127, R123

(table continues...)

Table 2 (continued) Pinout

SL. No.	MCU PORT PIN	Schematic Net Name	Test Points
92	P13[7]	AUDIO_1_I2S_RX_SDI	R277
93	P14[0]	GPIO_P14_0	P11.15
94	P14[1]	BB_I2C1_SDA	P4.4
95	P14[2]	BB_I2C1_SCL	P4.13
96	P14[3]	GPIO_P14_3	P11.14
97	P14[4]	GPIO_P14_4	P11.16
98	P14[5]	GPIO_P14_5	P12.12
99	P14[6]	GPIO_P14_6	P12.16
100	P14[7]	GPIO_P14_7	P17.8
101	P15[0]	BB_CAN1_TXD	P3.6
102	P15[1]	BB_CAN1_RXD	P4.6
103	P15[2]	GPIO_P15_2	P12.14
104	P15[3]	GPIO_P15_3	P12.10
105	P16[0]	GPIO_P16_0	P12.15
106	P16[1]	GPIO_P16_1	P12.9
107	P16[2]	GPIO_P16_2	P11.13
108	P16[3]	GPIO_P16_3	P2.6
109	P16[4]	GPIO_P16_4	P2.16
110	P16[5]	GPIO_P16_5	P12.5
111	P16[6]	GPIO_P16_6	P12.4
112	P16[7]	GPIO_P16_7	P12.3
113	P17[0]	BB_CAN6_TXD	P14.15
114	P17[1]	BB_CAN6_RXD	P14.16
115	P17[2]	GPIO_P17_2	P2.15
116	P17[3]	GPIO_P17_3	P1.13
117	P17[4]	GPIO_P17_4	P12.2
118	P17[5]	GPIO_P17_5	P12.6
119	P17[6]	GPIO_P17_6	P12.7
120	P17[7]	GPIO_P17_7	P12.8
121	P18[0]	GPIO_P18_0	P7.5
122	P18[1]	GPIO_P18_1	P7.16
123	P18[2]	GPIO_P18_2	P7.6
124	P18[3]	GPIO_P18_3	P7.14

(table continues...)

Table 2 (continued) Pinout

SL. No.	MCU PORT PIN	Schematic Net Name	Test Points
125	P18[4]	GPIO_P18_4	P15.10
126	P18[5]	GPIO_P18_5	P7.8
127	P18[6]	GPIO_P18_6	P7.3
128	P18[7]	GPIO_P18_7	P7.4
129	P19[0]	GPIO_P19_0	P7.12
130	P19[1]	GPIO_P19_1	P7.9
131	P19[2]	GPIO_P19_2	P7.1
132	P19[3]	GPIO_P19_3	P7.15
133	P19[4]	SWCLK_TCLK_SEC	P7.2
134	P20[0]	BB_LIN5_RXD	P3.5
135	P20[1]	BB_LIN5_TXD	P3.8
136	P20[2]	BB_LIN5_SLP	P3.7
137	P20[3]	BB_CAN4_TXD	P13.8
138	P20[4]	BB_CAN4_RXD	P13.6
139	P20[5]	GPIO_P20_5	P1.15
140	P20[6]	BB_CAN_SPI1_SS0	P13.10
141	P20[7]	BB_CAN_SPI1_SS1	P13.12
142	P21[0]	CPU_WCO_IN	R61
143	P21[1]	CPU_WCO_OUT	R62
144	P21[2]	CPU_ECO_IN	R253
145	P21[3]	CPU_ECO_OUT	R252
146	P21[4]	CB_BUTTON_P21_4	J3.1
147	P21[5]	GPIO_P21_5	J24.2
148	P21[6]	BB_LIN0_TXD	P6.14
149	P21[7]	BB_LIN0_SLP	P6.15
150	P22[0]		
151	P22[1]	GPIO_P22_1	J8.2
152	P22[2]	GPIO_P22_2	J7.2
153	P22[3]	GPIO_P22_3	J10.2
154	P22[4]	TRACE_CLOCK_1	P1.5
155	P22[5]	BB_LIN3_RXD	P6.12
156	P22[6]	BB_LIN3_TXD	P6.12
157	P22[7]	BB_LIN3_SLP	P6.16

(table continues...)

Table 2 (continued) Pinout

SL. No.	MCU PORT PIN	Schematic Net Name	Test Points
158	P23[0]	BB_CAN3_TXD	P6.11
159	P23[1]	BB_CAN3_RXD	P6.13
160	P23[2]	CB_LED_P23_2	J4.2
161	P23[3]	AUTO_ETH_RXC_R	P10.14
162	P23[4]	SWO_TDO_PRM	P2.3
163	P23[5]	SWCLK_TCLK_PRM	P2.5
164	P23[6]	SWDIO_TMS_PRM	P2.9
165	P23[7]	SWDOE_TDI_PRM	P2.7
166	P24[0]	GPIO_P24_0	P17.4
167	P24[1]	GM_CK_R	P17.13, TP40
168	P24[2]	GM_RWDS_R	P17.15
169	P24[3]	GM_CS#0_R	P17.11
170	P25[4]	GM_CS#1_R	P17.9
171	P25[0]	GM_DQ0_R	P17.7
172	P25[1]	GM_DQ1_R	P17.16
173	P25[2]	GM_DQ2_R	P17.5
174	P25[3]	GM_DQ3_R	P17.3
175	P25[4]	GM_DQ4_R	P17.14
176	P25[5]	GM_DQ5_R	P17.1
177	P25[6]	GM_DQ6_R	P17.10
178	P25[7]	GM_DQ7_R	P17.12
179	P26[0]	GIG_ETH_REF_CLK_R	R125
180	P26[1]	GIG_ETH_TX_EN_CTRL_R	P11.5
181	P26[2]	GIG_ETH_TX_CLK_R	P11.4
182	P26[3]	GIG_ETH_TX_D0_R	P11.10
183	P26[4]	GIG_ETH_TX_D1_R	P11.11
184	P26[5]	GIG_ETH_TX_D2_R	P11.2
185	P26[6]	GIG_ETH_TX_D3_R	P11.8
186	P26[7]	GIG_ETH_RX_D0_R	P11.9
187	P27[0]	GIG_ETH_RX_D1_R	P11.7
188	P27[1]	GIG_ETH_RX_D2_R	P11.6
189	P27[2]	GIG_ETH_RX_D3_R	P11.3
190	P27[3]	GIG_ETH_RX_DV_CTRL_R	P11.1

(table continues...)

Table 2 (continued) Pinout

SL. No.	MCU PORT PIN	Schematic Net Name	Test Points
191	P27[4]	GIG_ETH_RX_CLK_R	P9.15
192	P27[5]	GIG_ETH_MDIO_R	P9.16
193	P27[6]	GIG_ETH_MDC_R	P9.14
194	P27[7]	GPIO_P27_7	P12.1
195	P28[0]	GPIO_P28_0	P1.2
196	P28[1]	BB_USER_BUTTON_5	P6.5
197	P28[2]	BB_USER_BUTTON_4	P13.1
198	P28[3]	BB_SPI0_WP	P6.4
199	P28[4]	BB_SPI0_HOLD	P6.3
200	P28[5]	BB_FRA_STBN	P6.2
201	P28[6]	BB_FRA_ERRN	P6.1
202	P28[7]	BB_CAN6_WAKE	P13.11
203	P29[0]	BB_CAN2_S	P13.15
204	P29[1]	BB_CXPI_SELMS	P5.14
205	P29[2]	BB_CAN1_S	P4.7
206	P29[3]	BB_CXPI_RXD	P4.3
207	P29[4]	BB_USER_LED6	P5.9
208	P29[5]	BB_CXPI_NSLP	P4.8
209	P29[6]	BB_GPIO_56_RESET	P8.6
210	P29[7]	BB_USER_LED5	P5.8
211	P30[0]	BB_FRB_WAKE	P5.6
212	P30[1]	GPIO_P30_1	P1.8
213	P30[2]	BB_CAN9_WAKE	P14.14
214	P30[3]	BB_FRB_STBN	P8.11
215	P31[0]	BB_USER_LED4	P5.7
216	P31[1]	GPIO_P31_1	P1.12
217	P31[2]	BB_USER_LED3	P5.5
218	P32[0]	BB_USER_BUTTON_2	P3.15
219	P32[1]	BB_USER_BUTTON_3	P3.13
220	P32[2]	BB_USER_LED2	P3.16
221	P32[3]	BB_USER_LED0	P14.5
222	P32[4]	BB_LIN4_RXD	P4.16
223	P32[5]	BB_USER_LED1	P5.1

(table continues...)

Table 2 (continued) Pinout

SL. No.	MCU PORT PIN	Schematic Net Name	Test Points
224	P32[6]	BB_CAN0_TXD	P4.15
225	P32[7]	BB_CAN0_RXD	P5.4
226	P33[0]	GPIO_P33_0	P2.12
227	P33[1]	GIG_ETH_TX_ER_R	P9.13
228	P33[2]	GPIO_P33_2	P2.10
229	P33[3]	GPIO_P33_3	P9.1
230	P33[4]	GIG_ETH_TX_D5_R	P9.11
231	P33[5]	GIG_ETH_TX_D6_R	P9.9
232	P33[6]	GIG_ETH_TX_D7_R	P9.10
233	P33[7]	GIG_ETH_RX_D4_R	P9.7
234	P34[0]	GIG_ETH_RX_D5_R	P9.8
235	P34[1]	GIG_ETH_RX_D6_R	P9.12
236	P34[2]	GIG_ETH_RX_D7_R	P9.5
237	P34[3]	GIG_ETH_RX_ER_R	P9.6
238	P34[4]	GPIO_P34_4	P2.8
239	P34[5]	GPIO_P34_5	P2.11
240	P34[6]	GPIO_P34_6	P2.4
241	P34[7]	GPIO_P34_7	P2.2

5 Additional information

This section describes the test points available and the advance features in this evaluation board.

5.1 Test points

The following table describes the test points available in TRAVEO™ T2G B-H-16M 320 CPU Evaluation Board.

SL. No.	Test Points	Schematic Net Name
1	TP57	GND
2	TP6	VCC_12V, FL3.2
3	TP1	FL1.2, VCC_3V3
4	TP2	EXT_PS_CTL2
5	TP7	J18.1, VCC_1V1
6	TP4	J11.1, EXT_PS_CTL0
7	TP17	FL4.2, VCC_5V
8	TP5	J13.2, EXT_PS_CTL1
9	TP38	U9.2, VCC_1V8
10	TP19	U3.2, VCC_2V5
11	TP12	U2.1, VCC_1V1_LDO
12	TP14	CPU_VDDIO3, J23.1
13	TP13	CPU_VDDIO4, J22.1
14	TP11	CPU_VCCD, J17.1
15	TP9	CPU_VDDD, J20.2
16	TP10	CPU_VDDIO2
17	TP8	CPU_VDDIO1, J19_2
18	TP36	U6H.M8, AGND_R
19	TP37	CPU_VDDA_R
20	TP18	WCO/BTB_R
21	TP20	ECO/BTB_R
22	TP39	USB_GPIO4
23	TP3	MICTOR_TRACE_CTL
24	TP23	WAKE_LED
25	TP22	AUTO_PHY_RST
26	TP21	TJA_SEL_1V8
27	TP32	TJA_CLK_IN_OUT
28	TP26	GB_JTAG_CLK
29	TP29	GIG_ETH_COL
30	TP31	GIG_ETH_CS
31	TP34	GB_INT_C

5 Additional information

SL. No.	Test Points	Schematic Net Name
32	TP27	GB_TDO
33	TP25	GB_TMS
34	TP24	GB_TDI
35	TP28	GB_TRSETN
36	TP30	GIG_PHY_RESET
37	TP33	GB_VDDA1P8_1
38	TP35	GB_VDDA1P8
39	TP70	AUDIO_AUX
40	TP67	AUDIO_VBAT2
41	TP71	AUDIO_VBAT1
42	TP68	AUDIO_VREF
43	TP49	AUDIO_12S_ADWS
44	TP48	AUDIO_RESET
45	TP69	AUDIO_SPI_DAVN
46	TP54	RFU_9
47	TP44	RFU_3
48	TP53	RFU_10
49	TP64	RESET_2
50	TP43	RFU_2
51	TP62	SMIF_CS3
52	TP58	RESET_3
53	TP59	RESET_4
54	TP42	RFU_1
55	TP41	SMIF_CK#
56	TP45	RFU_4
57	TP40	GM_CK_R
58	TP60	RFU_6
59	TP52	RFU_7
60	TP46	RFU_5
61	TP47	RFU_8
62	TP63	RESET_1
63	TP61	GM_DQ2
64	TP66	GPIO_P14_6_
65	TP55	HFLASH_PSC
66	TP56	HFLASH_RFU2

SL. No.	Test Points	Schematic Net Name
67	TP65	MEM_RSTX
68	TP51	HFLASH_INT
69	TP50	HFLASH_RSTO
70	TP15	BB_FRA_EN
71	TP16	BB_FRB_EN

5.2 Advanced features

5.2.1 Audio Interface

Y6 (24.74MHZ) oscillator can be used as MCLK by mounting R212 0 Ohm resistor.

5.2.2 Base Board

The TRAVEO™ CYTVII-B-H-16M-320-CPU T2G Evaluation Board can be used in conjunction with an extension board or a base board to use the full functionality of the CPU board. The Base board or extension board consists of.

- Ten high-speed CAN transceives and six LIN transceivers
- One EEPROM device with SPI interface
- User switches, user LEDs, and potentiometer on-board
- Two FlexRay interfaces
- One CXPI transceiver

Generic 10x2 IO headers to expand the functionality of TRAVEO™ II evaluation boards

5.2.2.1 Connectors

- Two high-density Samtec connectors for interfacing with compatible TRAVEO™ II evaluation boards
- Ten dual DB-9 connectors for CAN interfacing
- Three dual DB-9 connectors for LIN interfacing
- One dual DB-9 connector for FlexRay interfacing
- One DB-9 connector for CXPI interfacing

5.2.2.2 Components

- Six TJA1057GT and four TJA1145T CAN transceivers
- Six TJA1021T LIN transceivers
- Two TJA1081TS FlexRay transceivers
- One S6BT112A0 CXPI transceiver
- One 25LC320A SPI-based EEPROM

5 Additional information

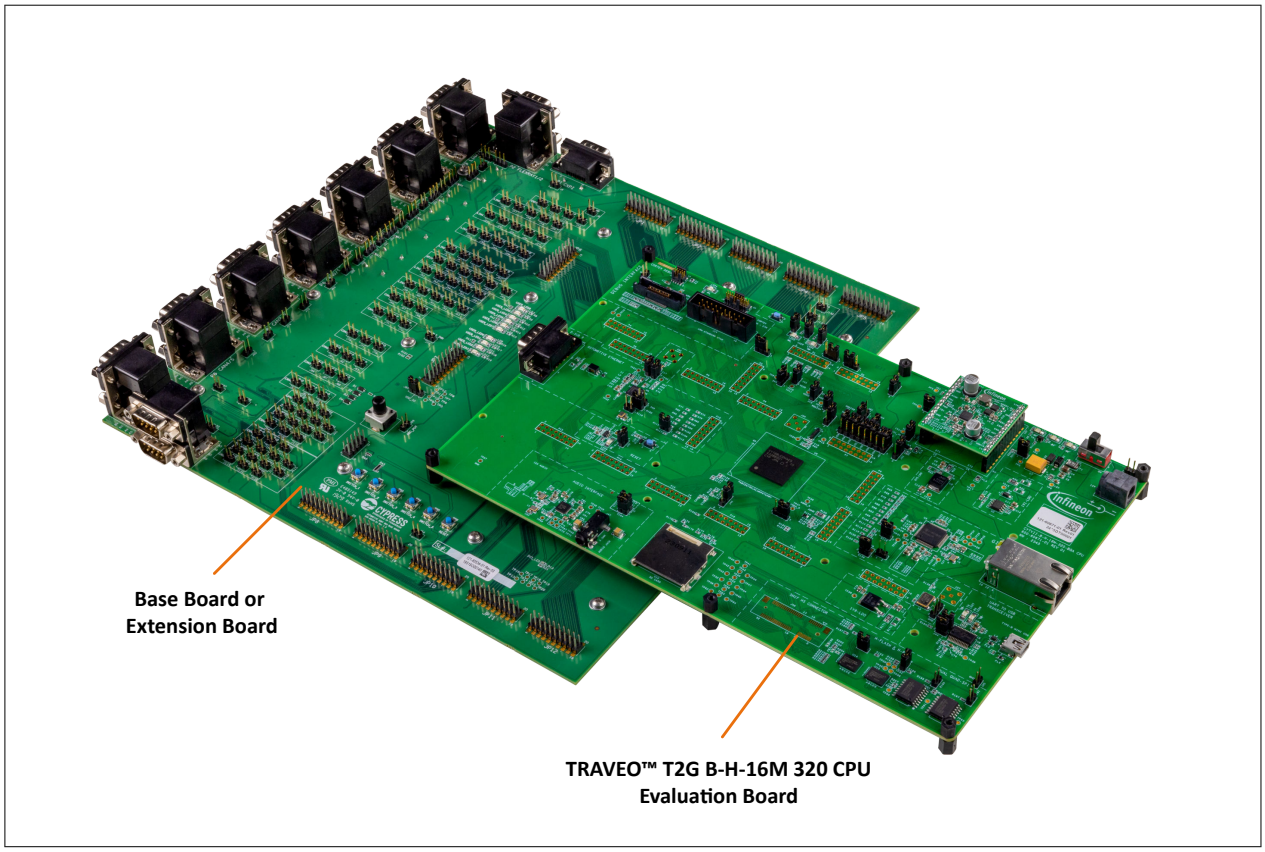

Figure 84 **TRAVEO™ CYTVII-B-H-16M-320-CPU T2G Evaluation Board connected to T2G B-E Base board**

References

Sample driver library

[1] Infineon Technologies AG: *TRAVEO™ T2G Sample driver Library*; Available online

Datasheets

[2] Infineon Technologies AG: *Semper™ Flash Datasheet*;Available online
[3] Infineon Technologies AG: *HYPERRAM™(S27KL) Datasheet*; Available online

Evaluation board

[4] Infineon Technologies AG: *CYTVII-B-E-Base Board*;Available online

Design support

[5] Infineon Technologies AG: *TRAVEO™ T2G Auto Flash Utility*; Available online

Glossary

Abbreviation	Definition
AC	Alternating current
ADC	Analog-to-digital converter
BOM	Bill of materials
CAN	Controller area network
CAP	Capacitor
CAN FD	Controller area network flexible data-rate
CPU	Central processing unit
DAC	Digital-to-analog converter
DC	Direct current
ECO	External crystal oscillator
ESD	Electrostatic discharge
ETH	Ethernet
GPIO	General-purpose input output
HFLASH	Hyper-Flash
HRAM	Hyper random-access memory
IC	Integrated circuit
IDE	Integrated development environment
IoT	Internet of things
I2C	Inter-integrated circuit
I2S	Inter-IC sound
LED	Light-emitting diode
LIN	Local interconnect network
LDO	Ow dropout voltage regulator
LPO	Low power oscillator
MCU	Microcontroller unit
PC	Personal computer
POT	Potentiometer
PMIC	Power management integrated circuits
QSPI	Quad serial peripheral interface
SCB	Serial communication block
SDK	Software development kit
SMIF	Serial memory interface
SPI	Serial peripheral interface
SRAM	Static random-access memory

Glossary

Abbreviation	Definition
SWD	Serial wire debug
TP	Test point
UART	Universal asynchronous receiver transmitter
USB	Universal serial bus
WCO	Watch crystal oscillator

Revision history

Document revision	Date	Description of changes
**	2025-04-28	Initial release of User guide for TRAVEO™ T2G B-H-16M 320 CPU Evaluation Board
*A	2025-08-21	Published to web
*B	2026-06-16	Changed TRAVEO™ T2G CYT6BJC MCU to TRAVEO™ T2G CYT6BJCDHE MCU in section Peripheral details

Trademarks

All referenced product or service names and trademarks are the property of their respective owners.

Edition 2026-06-16

Published by

Infineon Technologies AG

81726 Munich, Germany

© 2026 Infineon Technologies AG

All Rights Reserved.

Do you have a question about any aspect of this document?

Email: erratum@infineon.com

Document reference
IFX-wiw1747733231107

Important notice

The information given in this document shall in no event be regarded as a guarantee of conditions or characteristics ("Beschaffenheitsgarantie").

With respect to any examples, hints or any typical values stated herein and/or any information regarding the application of the product, Infineon Technologies hereby disclaims any and all warranties and liabilities of any kind, including without limitation warranties of non-infringement of intellectual property rights of any third party.

In addition, any information given in this document is subject to customer's compliance with its obligations stated in this document and any applicable legal requirements, norms and standards concerning customer's products and any use of the product of Infineon Technologies in customer's applications.

The data contained in this document is exclusively intended for technically trained staff. It is the responsibility of customer's technical departments to evaluate the suitability of the product for the intended application and the completeness of the product information given in this document with respect to such application.

Warnings

Due to technical requirements products may contain dangerous substances. For information on the types in question please contact your nearest Infineon Technologies office.

Except as otherwise explicitly approved by Infineon Technologies in a written document signed by authorized representatives of Infineon Technologies, Infineon Technologies' products may not be used in any applications where a failure of the product or any consequences of the use thereof can reasonably be expected to result in personal injury.