OPTIREG™ linear voltage regulator TLS125D0EJ demoboard

Family overview Support

Preface

Scope and purpose

This document describes the OPTIREG™ linear voltage regulator TLS125D0EJ demoboard. Please also refer to the corresponding datasheet.

Intended audience

This document is intended for engineers who develop applications.

Table of contents

Preface . . . 1

Table of contents . . . 2

1 Introduction . . . 3

1.1 Features . . . 3

1.2 Block diagram . . . 4

2 Demoboard . . . 5

2.1 Operating conditions . . . 6

2.2 Demoboard configuration . . . 6

2.2.1 Jumpers . . . 6

3 Schematic and layout . . . 8

3.1 Schematic . . . 8

3.2 Layout . . . 9

4 Bill of materials . . . 10

5 Restrictions . . . 11

Revision history . . . 12

Disclaimer . . . 13

1 Introduction

1.1 Features

- 250 mA current capability
- Very high accuracy voltage tracking
- Output voltage adjustable down to 2.0 V
- Very low dropout voltage
- Very low current consumption in OFF mode
- Power good output indicates overvoltage and undervoltage
- Internally controlled soft start
- Green Product (RoHS compliant)
- AEC qualified

Additional benefits of the TLS125D0EJ voltage tracking regulator:

- Fast regulation
- Very good stability characteristics
- Only a small ceramic capacitor of 1 µF at the output is required
- Internal protection features make the devices robust against immediate damage:
  - Output current limitation
  - Short circuit protected output (to GND and to battery)
  - Overtemperature shutdown
  - Reverse polarity protected input

These features make the TLS125D0EJ voltage tracking regulator perfectly suitable as automotive sensor supply and as high precision supply for off-board loads.

1.2 Block diagram

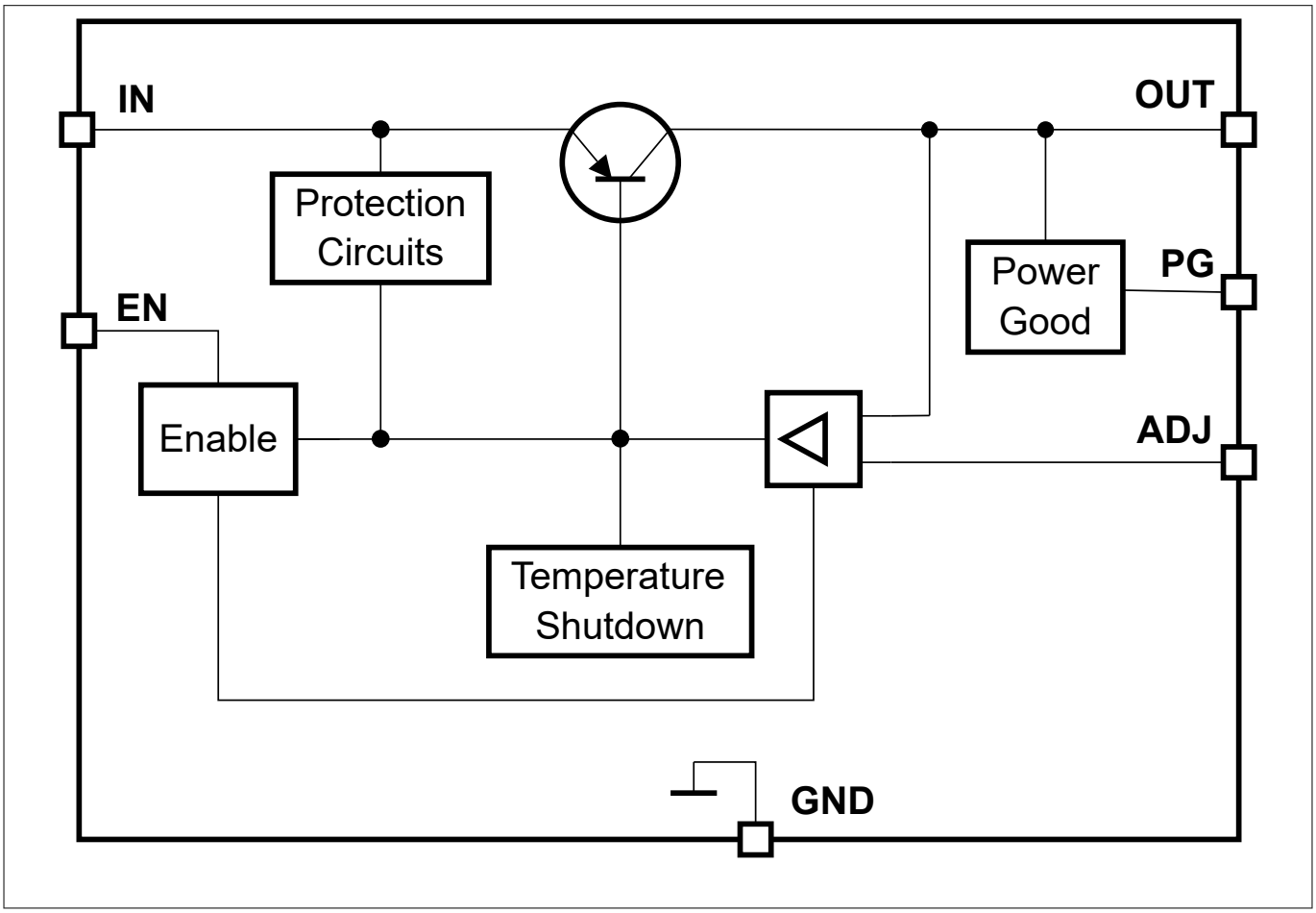

Figure 1 Block diagram

2 Demoboard

Figure 2 shows the OPTIREG™ linear voltage regulator TLS125D0EJ demoboard.

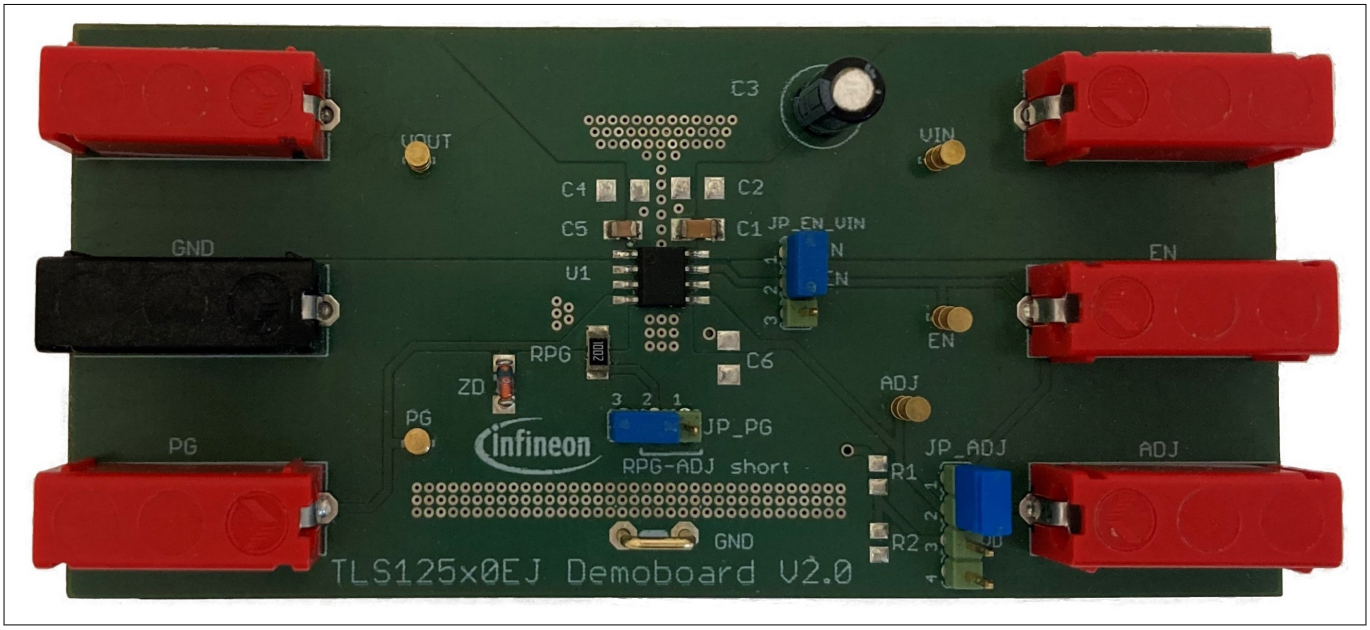

Figure 2 OPTIREG™ linear voltage regulator TLS125D0EJ demoboard

2.1 Operating conditions

To avoid electrical damage of the demoboard, the operating range defined in Table 1 must be maintained.

Table 1 Limit values for operation[1)]

Parameter	Pin	Maximum Ratings		Unit	Note
		Min.	Max.		
Board supply voltage[2)]	VIN	-16	45	V	Power supply
Adjust voltage[3)]	VADJ	-16	45	V	Tracked reference voltage
Regulator output voltage	VOUT	-5	45	V	–
Enable input signal	EN	-16	45	V	Enables or disables the voltage tracking regulator
Power good output signal	PG	-0.3	7	V	Indicates, whether Power good conditions are met
Ground	GND	0	0	V	System GND

1) The demoboard operates at an ambient temperature of 25°C.
2) Functional input voltage range: 4 V to 45 V.
3) Functional ADJ voltage range: 2 V to 14 V.

2.2 Demoboard configuration

The jumper pins and solder pads on the demoboard provide easy to use configuration options.

Jumper connections

- EN input pin ↔ supply voltage pin VIN (JP_EN_VIN)
- ADJ pin ↔ EN pin or
  ADJ pin ↔ external voltage divider
  to adjust the reference voltage depending on voltage at VIN pin (JP_ADJ)
- ADJ pin ↔ RPG pin
  as pull-up voltage for the power good resistor RPG (JP_PG)

Solder pads for components

- Additional input capacitor C2
- Additional output capacitor C4
- Adjust capacitor C6
- Voltage divider resistor R1
- Voltage divider resistor R2

2.2.1 Jumpers

The unlabeled pin of each jumper can take an unused connector to leave the connection open.

Jumper JP_EN_VIN

The JP_EN_VIN jumper can connect the EN input pin to the supply voltage at the VIN pin.

2 Demoboard

Table 2 Jumper JP_EN_VIN options for Enable function

JP_EN_VIN	Function
EN input pin ↔ VIN pin	The regulator is enabled while it is supplied from the voltage at the VIN pin
open	The EN input pin is supplied from the EN banana jack connector[1)]

1) Without supplying a signal to EN, the regulator is disabled because of the internal pull-down resistor.

Jumper JP_ADJ

The JP_ADJ jumper can connect the ADJ pin of the device to one of the following:

- The voltage at the EN pin (V_{EN}), if the ADJ pin is not supplied from an external voltage
- A reference voltage (V_D) adapted by the voltage divider on the demoboard

Table 3 Jumper JP_ADJ options for reference voltage

JP_ADJ	Function
ADJ pin ↔ EN input pin	The ADJ pin is connected to the voltage at the EN pin
ADJ pin ↔ V_D	The ADJ pin is connected to the output voltage of the voltage divider (V_D)
open	The ADJ pin must be supplied from external via ADJ banana jack connector.[1)]

1) Without supplying a reference voltage to ADJ, the regulator is disabled.

If the ADJ pin is to be supplied from the output voltage of the voltage divider (V_D), then the resistors of the voltage divider must be implemented. The value of the resistors can be easily calculated when neglecting the current flowing into the ADJ pin:

$$V_{\mathrm{ADJ}} = V_D = \frac{R_2}{R_1 + R_2} \times V_{\mathrm{IN}}$$

Equation 1

The current flowing into the ADJ pin can be neglected, if R_2 is less than 2.5 kΩ. To benefit from the high accuracy of the device, it is highly recommended to supply the ADJ pin from an external voltage source via the banana jack connector.

PG Jumper

With jumper JP_PG, the voltage at the ADJ pin can be used as pull-up voltage for the power good resistor RPG. The power good signal, which then corresponds to the voltage at the ADJ pin, can then be measured at the PG connector of the demoboard. To protect the the device from overvoltage, the PG connector is clamped by a Z-diode to typically 6.2 V.

Table 4 Jumper JP_PG options for power good function

JP_PG	Function
PG ↔ ADJ pin	The voltage applied at the ADJ pin is used as pull-up voltage for the power good resistor RPG. Power good monitoring is enabled.
open	No pull-up voltage is applied to the power good resistor RPG. Power good monitoring is disabled.

3 Schematic and layout

3.1 Schematic

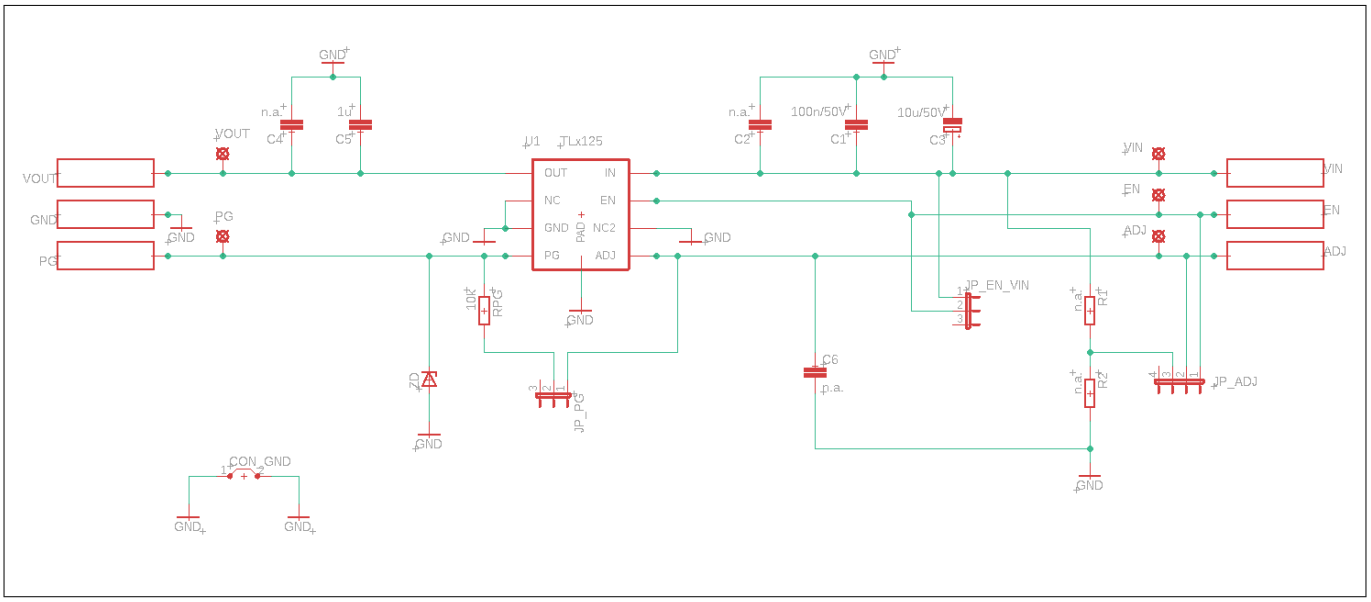

Figure 3 Schematic

3.2 Layout

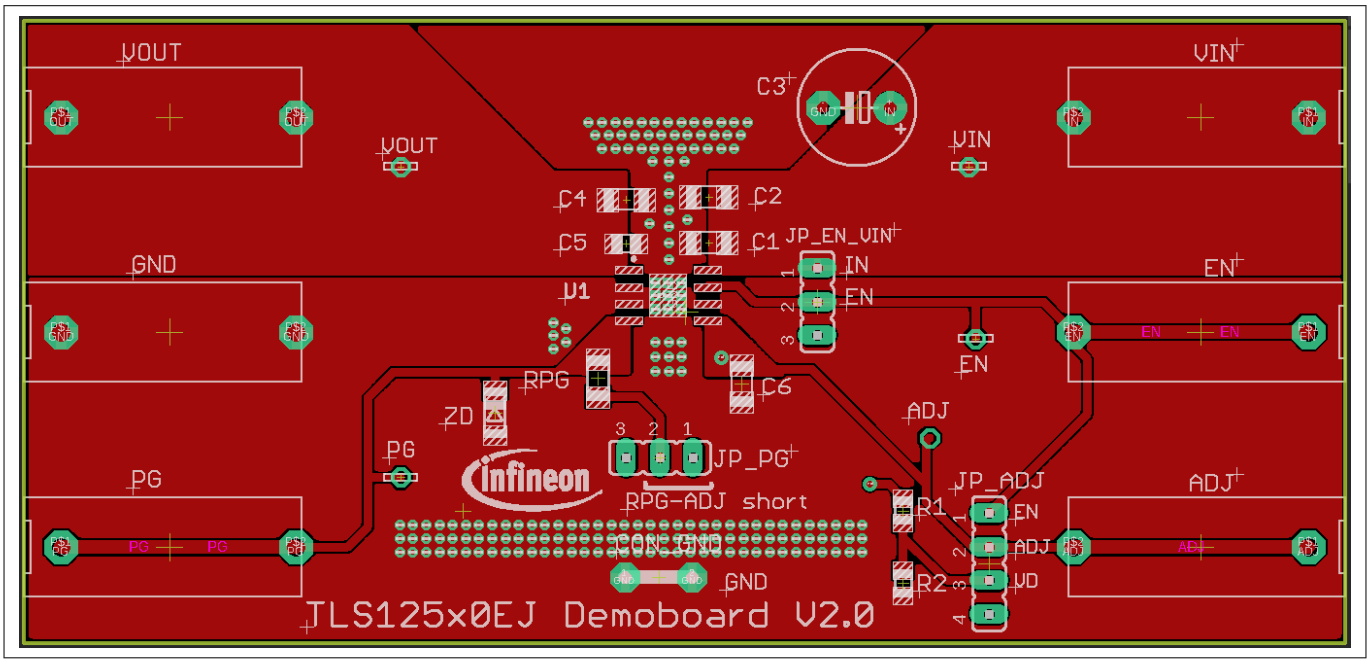

Figure 4 Top layer

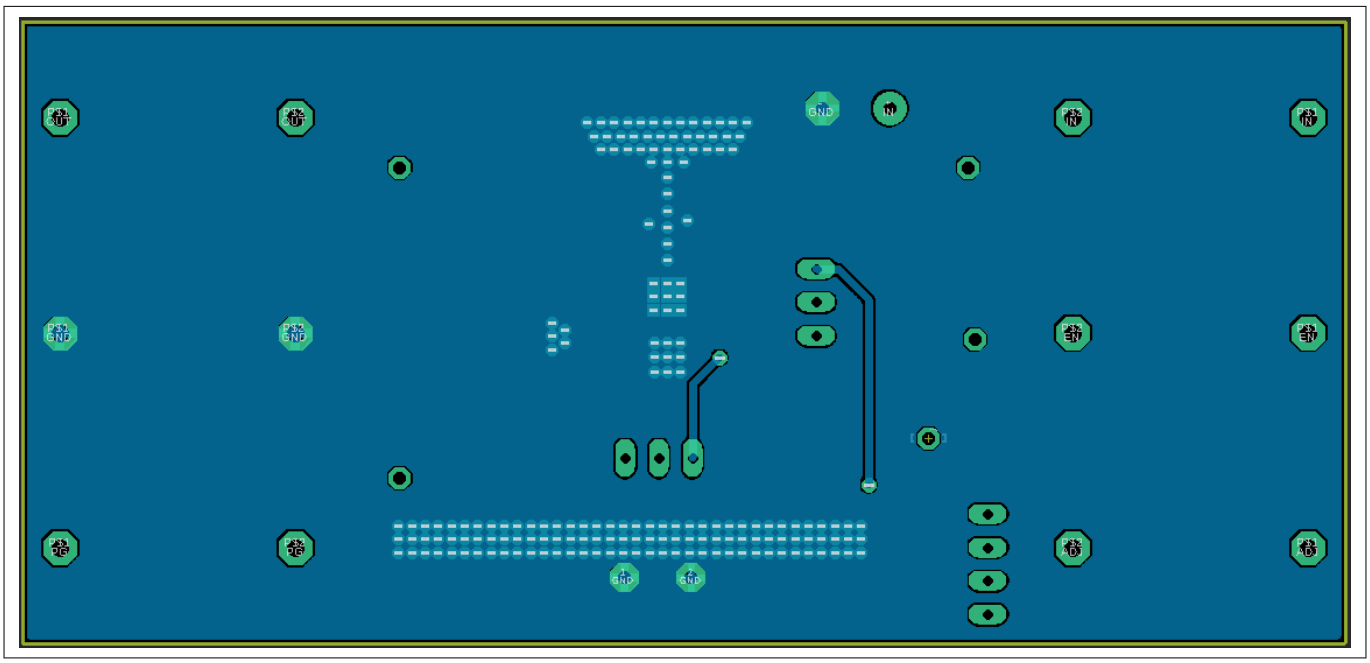

Figure 5 Bottom layer

4 Bill of materials

Table 5 Bill of materials

Part	Value	Package
U1	TLS125D0EJ	PG-DSO-8
VIN	Banana jack	BABU4MM
VOUT	Banana jack	BABU4MM
EN	Banana jack	BABU4MM
PG	Banana jack	BABU4MM
GND	Banana jack	BABU4MM
R1	n.a.	R0805
R2	n.a.	R0805
RPG	10 kΩ	R1206
C1	100 nF / 50 V	C1206
C2	n.a.	C1206
C3	10 µF / 50 V	E5-8.5
C4	n.a.	C1206
C5	1 µF / 16 V	C0805
C6	n.a.	C1206
JP_EN_VIN	–	Jumper
JP_ADJ	–	Jumper
JP_PG	–	Jumper
ZD	Z-diode ZMM6.2 (6.2 V)	SOD80C

5 Restrictions

This demoboard offers limited features only for evaluation and testing of Infineon products. The demoboard is not an end product or finished appliance, nor is it intended or authorized by Infineon to be integrated into end products. The demoboard may not be used in any production system.

For further information please visit www.infineon.com.

Revision history

Revision	Date	Changes
1.01	2024-12-23	Editorial changes
1.0	2022-12-12	Document created

Trademarks

All referenced product or service names and trademarks are the property of their respective owners.

Edition 2024-12-23

Published by

Infineon Technologies AG

81726 Munich, Germany

© 2024 Infineon Technologies AG

All Rights Reserved.

Do you have a question about any aspect of this document?

Email: erratum@infineon.com

Document reference
IFX-ynp1646406978407
Z8F80145818

Important notice

The information given in this document shall in no event be regarded as a guarantee of conditions or characteristics ("Beschaffenheitsgarantie").

With respect to any examples, hints or any typical values stated herein and/or any information regarding the application of the product, Infineon Technologies hereby disclaims any and all warranties and liabilities of any kind, including without limitation warranties of non-infringement of intellectual property rights of any third party.

In addition, any information given in this document is subject to customer's compliance with its obligations stated in this document and any applicable legal requirements, norms and standards concerning customer's products and any use of the product of Infineon Technologies in customer's applications.

The data contained in this document is exclusively intended for technically trained staff. It is the responsibility of customer's technical departments to evaluate the suitability of the product for the intended application and the completeness of the product information given in this document with respect to such application.

Warnings

Due to technical requirements products may contain dangerous substances. For information on the types in question please contact your nearest Infineon Technologies office.

Except as otherwise explicitly approved by Infineon Technologies in a written document signed by authorized representatives of Infineon Technologies, Infineon Technologies' products may not be used in any applications where a failure of the product or any consequences of the use thereof can reasonably be expected to result in personal injury.