

Automotive PSoC™ 4700S Plus Introduction

Q2 2024

ATV MC SBS

restricted

Table of contents

1 Introduction of Automotive PSoC™ Portfolio

2 Inductive Sensing Basic

3 Technology Comparison

4 Market Trend & Application Requirements

5 Roadmap and Product overview

6 Application examples

7 Development Tools

8 Q&A

Copyright © Infineon Technologies AG 2024. All rights reserved.

Infineon Microcontroller – most scalable portfolio
Successfully covering the entire range of automotive applications

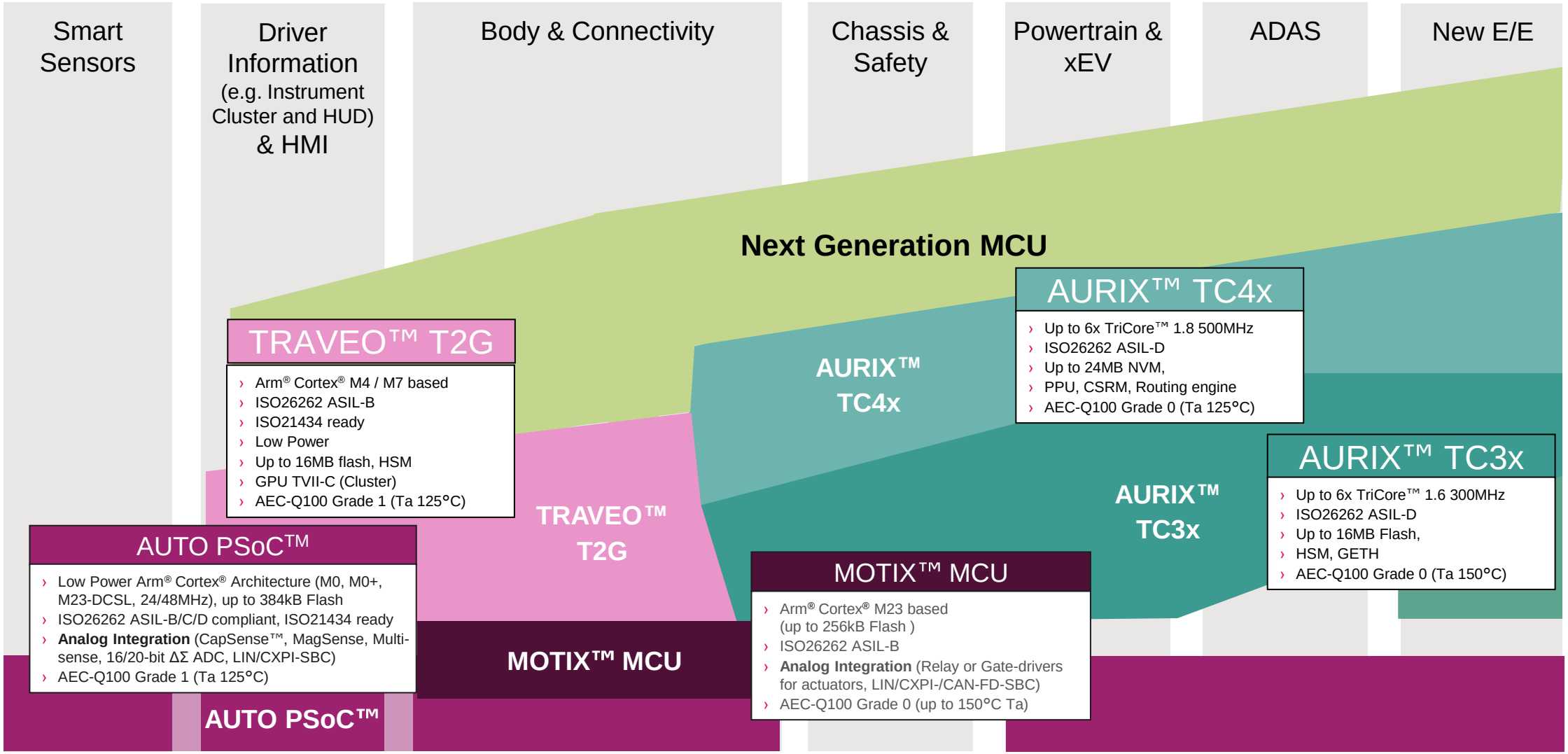

Copyright © Infineon Technologies AG 2024. All rights reserved.

PSoCTM Automotive microcontroller roadmap

		Sampling or available today	In development
Precision Analog	UHV + BMS 		**PSoC 4 BMS family**
	HV + BMS 	**PSoC 4 HVPA-144k** 12V supply (42V max), 24-48 MHz Cortex M0+, ASIL B 144kB Flash, embedded LIN-SBC (12V-LDO & PHY) 16/20-bit ΔΣ ADC (Lead acid focus)	**PSoC 4 HVPA-PPM/CPM** 12V supply (42V max), 24-48 MHz Cortex M0+, **ASIL C/D**, 144kB Flash, **CAN-FD**, **iso-UART**, 16/20-bit ΔΣ ADC, (Li ion shunt focus)
HMI & Smart Sensing	HV + Capsense 	**PSoC 4 HVMS family** 12V supply (42V max), 24-48 MHz Cortex M0+, 32-128kB Flash, embedded LIN-SBC (12V-LDO & PHY)	
	Capsense 	**PSoC 4xxx family** 3-5V supply, 24-48 MHz Cortex M0 / M0+, 16-384kB Flash, Optional Op-Amps, comparators, CAN/CAN-FD, USB, Crypto	
HMI	Multitouch 	**PSoC Multitouch TSG6, 6L, 6XL** 8.5'' – 15'' touchscreens **PSoC Multitouch TSG7, 7L, 7XL** 12'' – 15'' touchscreens Multichip-support for >15''	**PSoC Multitouch TSG8** OLED, Up to 24'' touchscreens (55'' with multichip-support)
	Fingerprint 	**PSoC Fingerprint** 340DPI,8.0X8.0 mm sensing area,<1% FRR at FAR 1:50k	

Copyright © Infineon Technologies AG 2024. All rights reserved.

PSoC™: One-stop-shop for a range of automotive HMI & smart sensor applications

Door handle and foot-kick detection



Buttons/sliders Force detection/haptics



Interior Lighting



Touchpads



Touchscreens



Segment LCD cluster



Capacitive navigation



Occupant detection



Hands-on detection



Biometrics & Navigation



PTC Heater



Level Sensing



Intelligent Battery Sensors



Li Ion Battery Management Systems

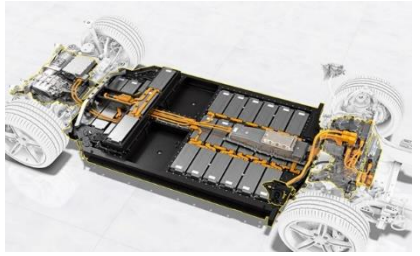

Legend

HMI

Beyond HMI

HMI = Human Machine Interface

Copyright © Infineon Technologies AG 2024. All rights reserved.

Key features – PSoC™ Automotive 4 for HMI & Smart Sensors

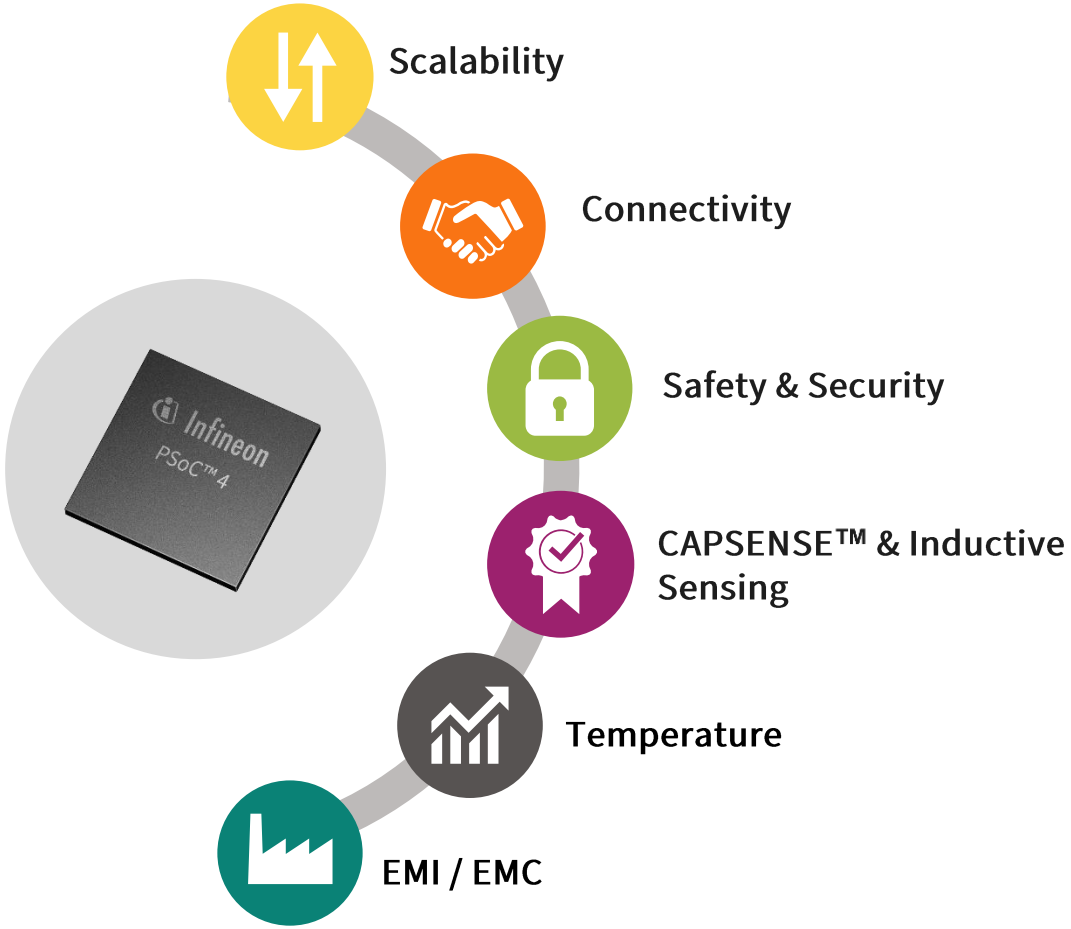

- Complete Portfolio
- Memory Density
- Package Lineup
- Performance

- LIN incl. 2 Slaves
- CAN/CAN FD
- SENT

- Supporting documents and FMEDA for multiple devices
- ISO 26262 Ready
- CRYPTO with AES256, SHA, CRC, Pseudo and True Random number generator

- Robust and reliable detection
- Low-power sensing for wake-up applications
- Inductive Sensing
- Resistive and current sensing

- AEC-Q100 Grade 3, 2, 1
- With mission profile up to +150°C

- ISO 11452-2 (RI)
- CISPR-25 (RE)
- IEC62132-4 (CI)
- IEC61967-4 (CE)

Copyright © Infineon Technologies AG 2024. All rights reserved.

Inductive Sensing Basics

Inductive Sensing Principle

Source: Magnetic Field Lines

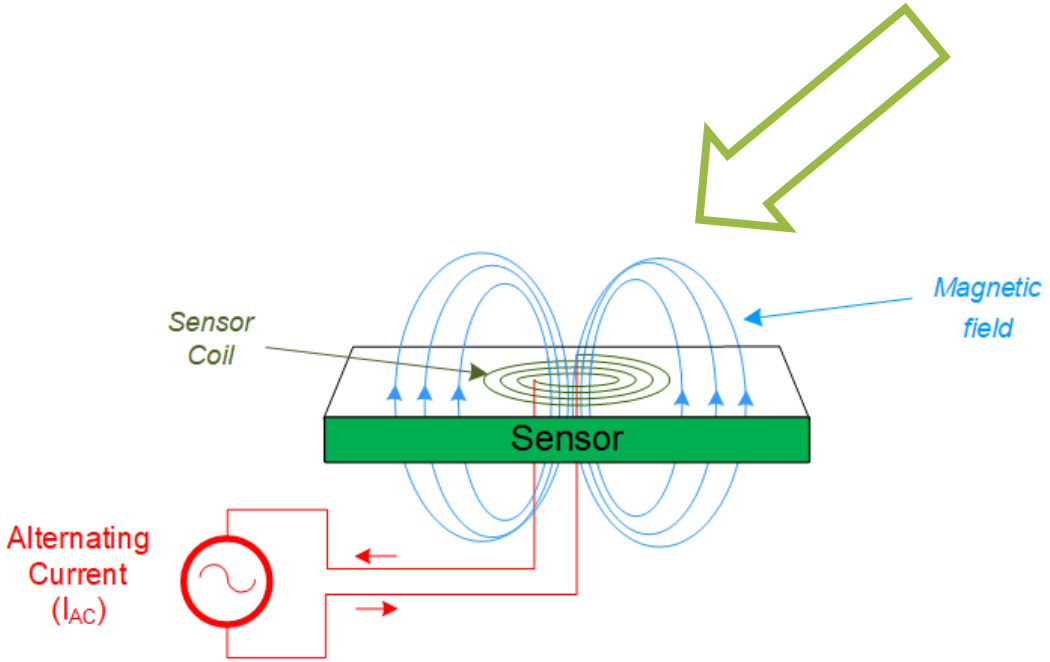

› Drive an AC signal into an inductive coil creates a magnetic field

Copyright © Infineon Technologies AG 2024. All rights reserved.

Inductive Sensing Principle

Source: Magnetic Field Lines

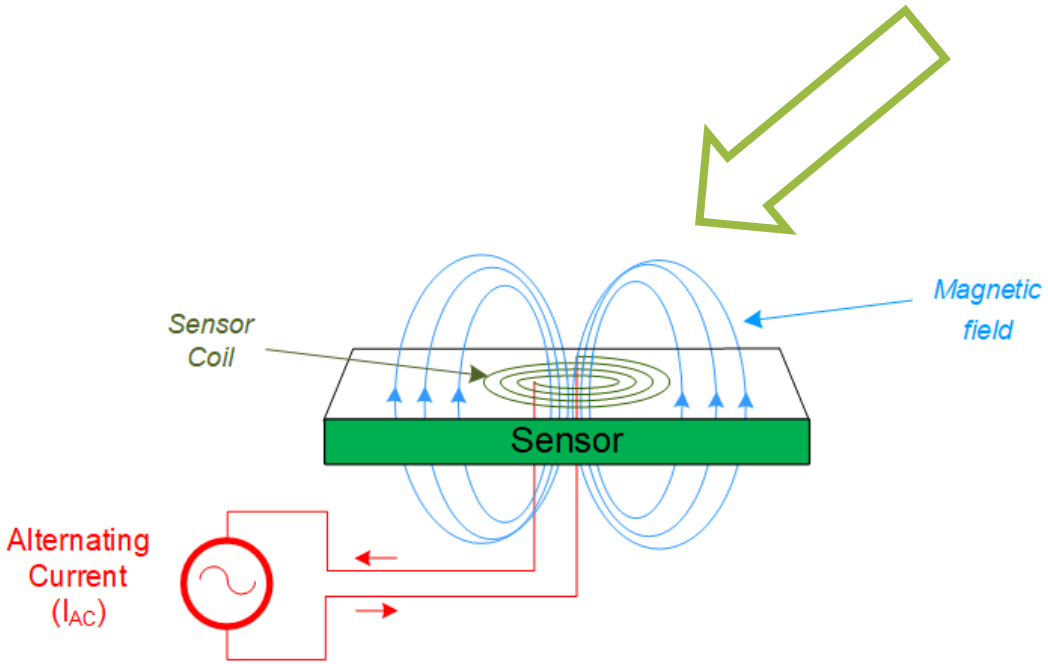

$dL = L\text{-}L'$

Eddy currents in the target generate a magnetic field that opposes the Rx magnetic field, changing L.

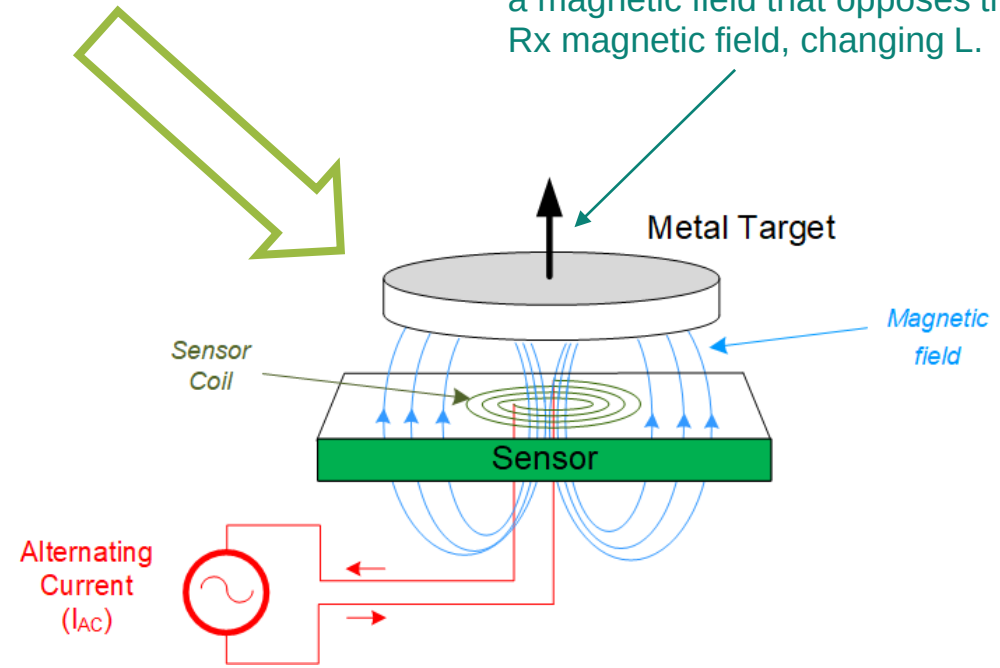

- Drive an AC signal into an inductive coil creates a magnetic field
- Moving a metal target close to the field changes the coil inductance

Copyright © Infineon Technologies AG 2024. All rights reserved.

InductiveSense Method

- Sensor coil placed parallel to external capacitor
- GPIO is excited at resonant frequency (no metal nearby).
- Tank impedance is maximum at resonance,
- Introduction of metal drops inductance.

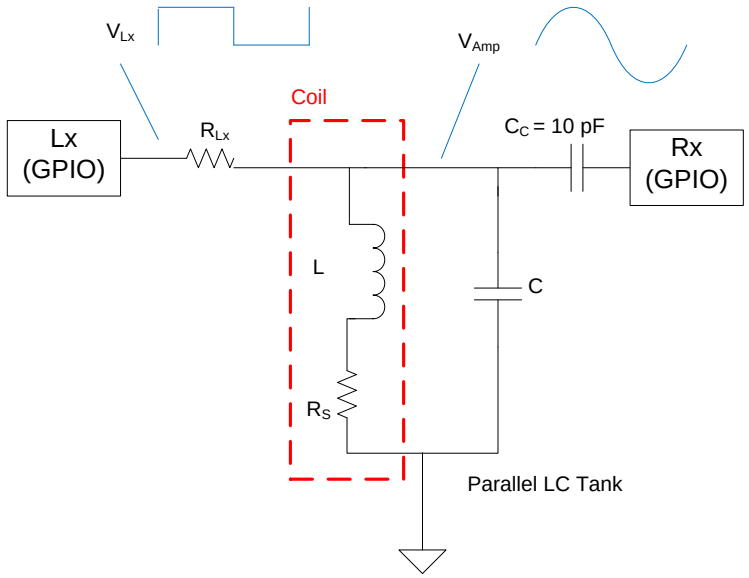

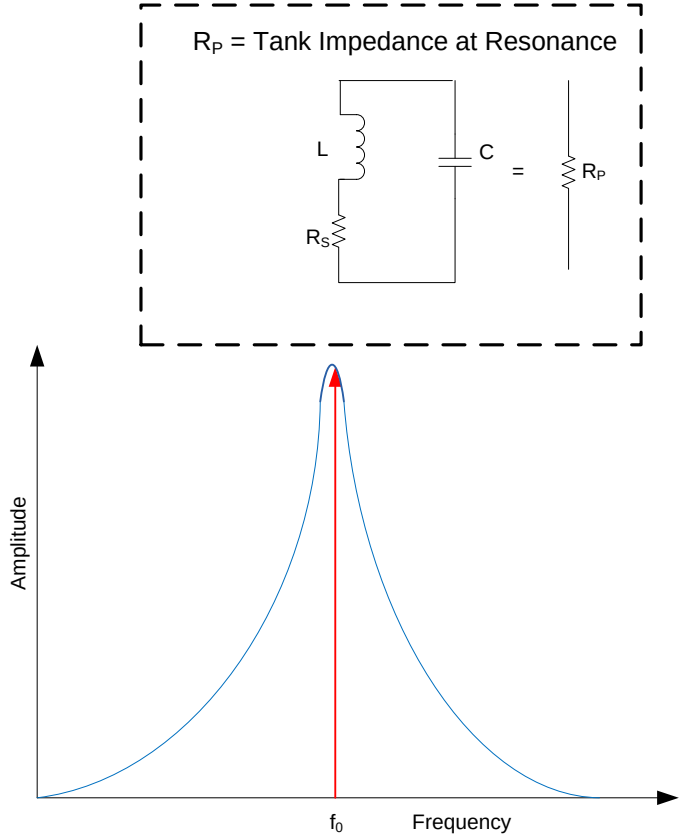

Copyright © Infineon Technologies AG 2024. All rights reserved.

Inductive Sensing Options

Touch Buttons/Force Sensing

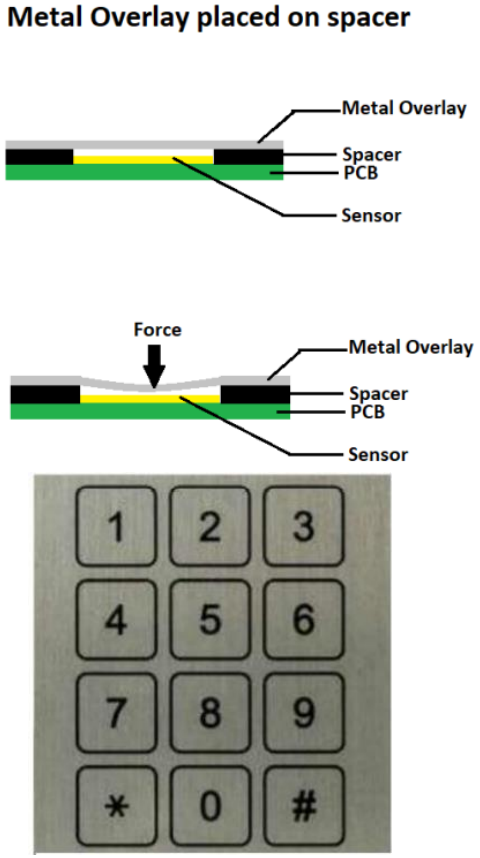

Linear Sliders

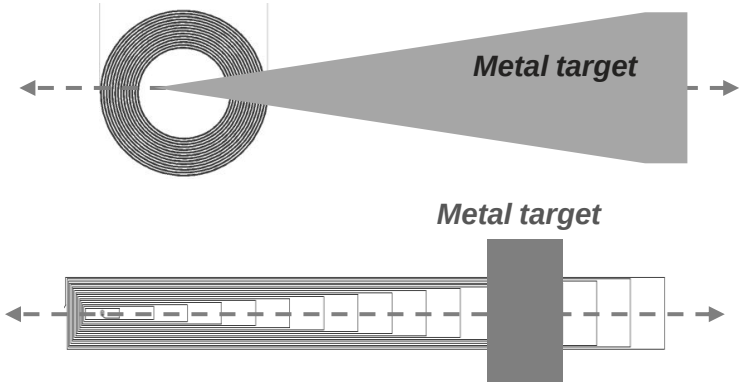

Metal Proximity

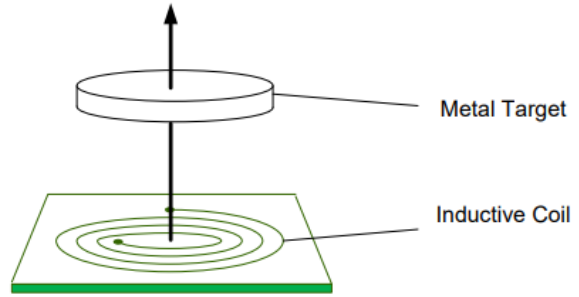

Digital Rotatory Encoders

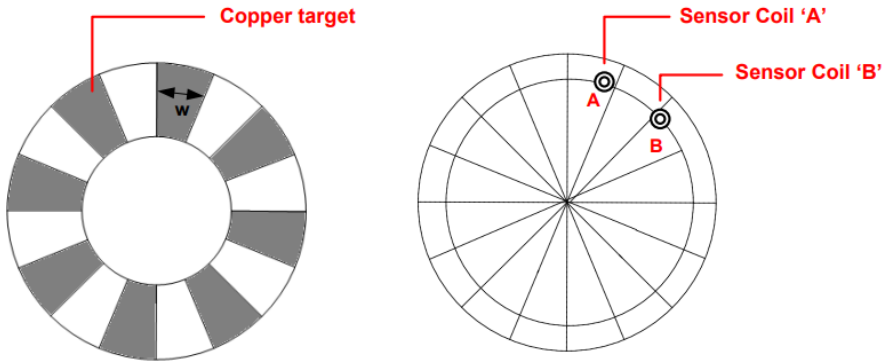

Analog Rotatory Encoders

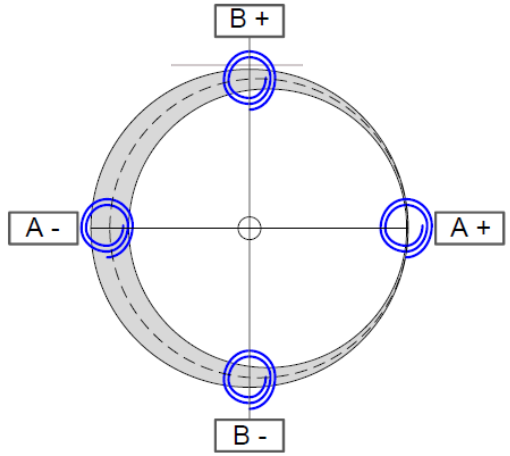

- Insensitive to dirt/oil/moisture.
- Works effectively with grounded or ungrounded (floating) metal.
- Intrinsically safe requiring no electrical connection to the metal

Copyright © Infineon Technologies AG 2024. All rights reserved.

Technology Comparisons

Capacitive and Inductive sensing – Technology Comparison

Parameter	Capacitive Sensing	Inductive Sensing
Technology	Electric Field	Magnetic Field
Touch - detection of physical touch intention	Proximity - no contact required	Contact and force required
Touch - deflection / Bending	No deflection	~200nm @ 0.5mm
Touch - water tolerance	Yes	N/A – detect Force
EMC radiation	High (conform)	High (conform)
Overlay – material properties	Plastic (Typical), Grounded Metal	Conductive surfaces (Metal, Metallic paint etc.)
Overlay – material thickness	18mm	~1mm

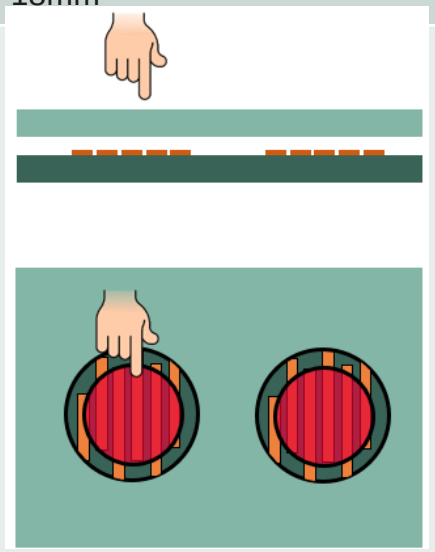

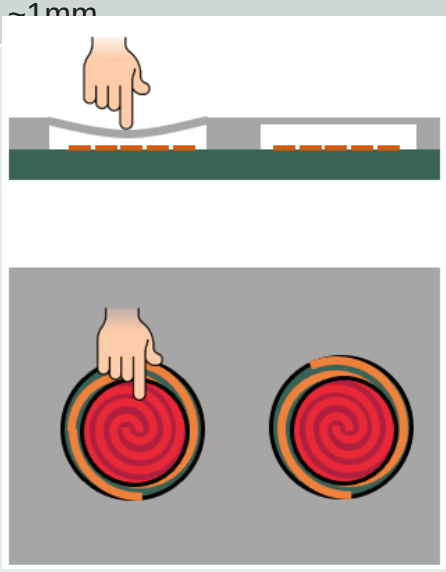

Copyright © Infineon Technologies AG 2024. All rights reserved.

Use Case Comparison

Category	Use Cases	Capacitive			Inductive
		Self	Self + Shield	Mutual	
	# Buttons	# of I/O	# of I/O	(# TX I/O)*(# RX I/O)	0.5*(# of I/O)
Finger Touch	Touch Buttons	Yes	Yes	Yes	No
		Cp< 200pF	Cp< 200pF	Cp< 1000pF	Cp not an issue
	Proximity	Ok	Yes-best performance	No	No
	Proximity Gesture	Yes		No	No
	Sliders	Yes	Yes	Yes	No
	Touchpad	Yes	Yes	Yes	No
	Touchpad Gestures	Two fingers	Two fingers	Multi-Touch	No
Liquid level sensing	Liquid level sensing	Ok performance	Ok performance	Yes-best performance	Ok with metal float
Force Sensing	Force Sensing	Ok performance	Yes	Yes	Yes
Rotary encoder	Rotary encoder	No	No	No	Yes

› POOR › OK › GOOD

Copyright © Infineon Technologies AG 2024. All rights reserved.

Use Case Comparison

Category	Use Cases	Capacitive			Inductive
		Self	Self + Shield	Mutual	
Metal Touch	Metal over Touch Buttons	Ok with Ground metal	Ok with Ground metal	No	Yes-best performance No metal Ground needed
	Sliders	Ok with Ground metal	Ok with Ground metal	No	Yes-best performance No metal Ground needed
	Metal Proximity	Ok with Ground metal	Ok with Ground metal	No	Yes-best performance No metal Ground needed
Waterproof	Waterproof Buttons	No	Yes	Yes	Yes
	Waterproof Sliders	No	Yes	No	Yes
# Capacitors	# Capacitors	1 (CMOD)	2 (CMOD+CSH)	2 (CMOD+CSH_TANK)	2+ #SENSORS (CMOD+CSH_TANK+# SENSOR)
Typical Applications	Typical Applications	Mech. Button replacement Non-metal proximity sensing Low-Cost Touchpad	Proximity sensing Liquid Tolerance	Multi-Touch Touchpad Touch screen Liquid level detection	Metal Buttons Rotary sensing Linear Encoding Force Sensing

› POOR › OK › GOOD

Copyright © Infineon Technologies AG 2024. All rights reserved.

Market Trend, Application Requirements

Smart surfaces with integrated HMI

Door handle touch buttons



Trunk open: Emblem / Logo touch



Door / Window control buttons



- Today’s automotive interior and exterior designs are being driven by intuitive HMI systems being integrated on several surfaces called as “smart surfaces” blending with the design of the car
- Some trends include curved surfaces, different materials as overlays such as Aluminum, Carbon, plastic, wood, sheet **metal**, etc.., and integrating several types of feedback such as visual, haptic and audio
- Primary challenges include achieving reliable performance/operation with thick overlays, different type of surfaces, water rejection, operating over an extended range of temperature while also meeting automotive compliance requirements such as functional safety and EMC
- Infineon is working with several partners in this area and offers solutions based on various technologies such as CapSense (capacitive-sensing), **Inductive sensing**, force-sensing, fingerprint sensing, impedance measurement, optical navigation

Copyright © Infineon Technologies AG 2024. All rights reserved.

Why Inductive Sensing ?

- **Inductive sensing detects <u>metal objects</u>**
  - Inductive sensing has been around for over 50 years
  - Introduced in 1958 to replace mechanical contacts that would wear out or were dangerous in explosive environments due to arcing

- **Inductive sensing enables:**
  - Metal deflection (Metal Buttons/Keypads)
  - Proximity detection
  - Angular detection
  - Flow detection

- **Why does Inductive sensing matter ?**
  - Effective for Metal over Touch (MoT) applications
  - Insensitive to dirt/oil
  - Insensitive to moisture
  - Works effectively with *grounded* or *ungrounded* (floating) metal
  - Intrinsically safe requiring no electrical connection to the metal
  - Large distance range for proximity detection of metallic objects

Copyright © Infineon Technologies AG 2024. All rights reserved.

Inductive Sensing: Aesthetic, Rugged, Low-cost

- Today's HMI designs require a low-cost solution which will function under extreme conditions: metal overlays, liquids, temperature, humidity, gloves, dust
  - Metal overlays on UI's are being used to improve reliability and add more physical protection to a design (such as exterior automotive HMI systems)
  - Optical sensors used in today's designs are easily affected by the environment, such as dust, which degrades the wear and tear of the design
  - Current solutions today use expensive sensors, like hall effect sensors, which are expensive and impact the BOM
- **Inductive sensing delivers a low-cost, robust and reliable solution for automotive designs**.

Copyright © Infineon Technologies AG 2024. All rights reserved.

Inductive Sensing in Automotive

- **HMI applications**
  - Touch buttons with metal overlay on door handles or trunk openers
  - Touch buttons with dual-sensing requirement = soft-touch + force-touch
  - Rotary encoders – applicable for trackpad systems, volume dials etc.,
  - Force-sensing based on inductive sensing – applicable for touchscreens, touch buttons systems

- **Non-HMI applications**
  - Gear shift detection with inductive sensors
  - Detect open/closure of a door or trunks (metal object detection)
  - Contactless throttle pedal applications
  - RPM sensors (based on inductive or hall effect) – contactless proximity sensing

Copyright © Infineon Technologies AG 2024. All rights reserved.

Inductive Sensing with PSoC™ 4700S Plus

Reliable inductive sensing solutions are difficult to implement

- Inductive sensing designs require specialized analog expertise to implement
- End applications require time-consuming manual tuning and calibration for robust performance
- Variations in manufacturing and environment, like extreme temperature and humidity, require complex algorithms to maintain reliable performance

Engineers must add new value-add features without increasing their product cost

- Discrete inductive sensing solutions require the addition of specialized analog ICs increasing BOM cost
- High sensor-count solutions require multiple discrete, costly ICs

Infineon PSoC 4700S Plus Sense Anything Family solves these problems

- Provides a reliable inductive sensing solution that works in harsh environments with **AutoTuning algorithms** that compensate for manufacturing variances
- Simplifies inductive sensing designs with a production-ready, easy-to-use **PSoC Creator and Modus Tool box Component**

- Delivers a **single-chip solution** built on the cost-optimized PSoC 4 architecture that supports up to 4 inductive sensors, the industry's best capacitive sensing solution, **CapSense**, and an integrated Arm Cortex-M0+ CPU

PSoC 4700S Plus delivers the best inductive and capacitive sensing technologies to support next-generation HMI designs.

Copyright © Infineon Technologies AG 2024. All rights reserved.

PSoC™ 4700S Plus Roadmap, Product Overview

Scalable PSoC™ 4 Product lineup for General Purpose & BMS Sensing

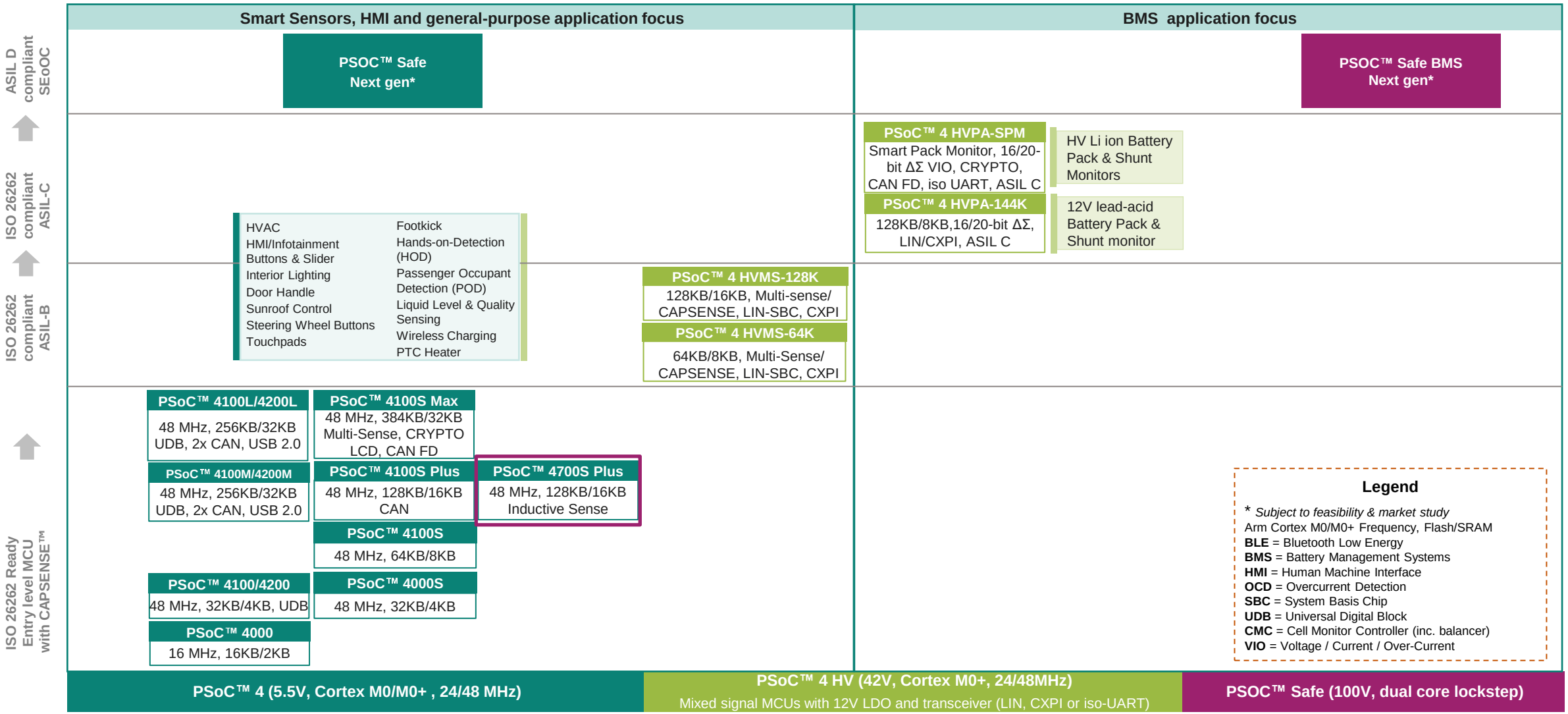

Copyright © Infineon Technologies AG 2024. All rights reserved.

Automotive PSoC™ 4700S Plus-Series Inductive Sensing

Applications

Force Sensing, haptics for HMI applications

Features

32-bit MCU subsystem
- 48-MHz Arm® Cortex®-M0+ CPU with DMA controller and real-time clock (RTC)
- 128-KB Flash and 16-KB SRAM
- External MHz oscillator (ECO) with PLL and 32-KHz watch crystal oscillator (WCO)

Programmable analog blocks
- One 12-bit, 1-Msps successive approximation register (SAR) analog-to-digital converter (ADC)
- One 10-bit, 46.8-ksps single-slope ADC[1],Two op-amps configurable as (PGA), comparators, etc.

Programmable digital blocks
- Eight 16-bit timer/counter/pulse-width modulation (TCPWM) blocks
- Five serial communication blocks (SCBs) that are configurable as I^2C, SPI, UART, or LIN Slave

Inductive Sensing
- Inductive sensing provides superior noise immunity
- Can reliably detect metal deflection under 190 nm
- Supports up to four sensors
- software automatically calibrates the solution to compensate for the manufacturing variations

One Controller Area Network (CAN) controller

Packages
- 40-pin QFN

I/O subsystem
- Up to 33 GPIOs, Any GPIO pin can be CAPSENSE™, analog, or digital

Collateral

Datasheet: PSoC™ 4700S Plus

[1] A simple ADC used to measure slow-movingsignals
[2] Embedded programmable digital logic in the I/Osubsystem

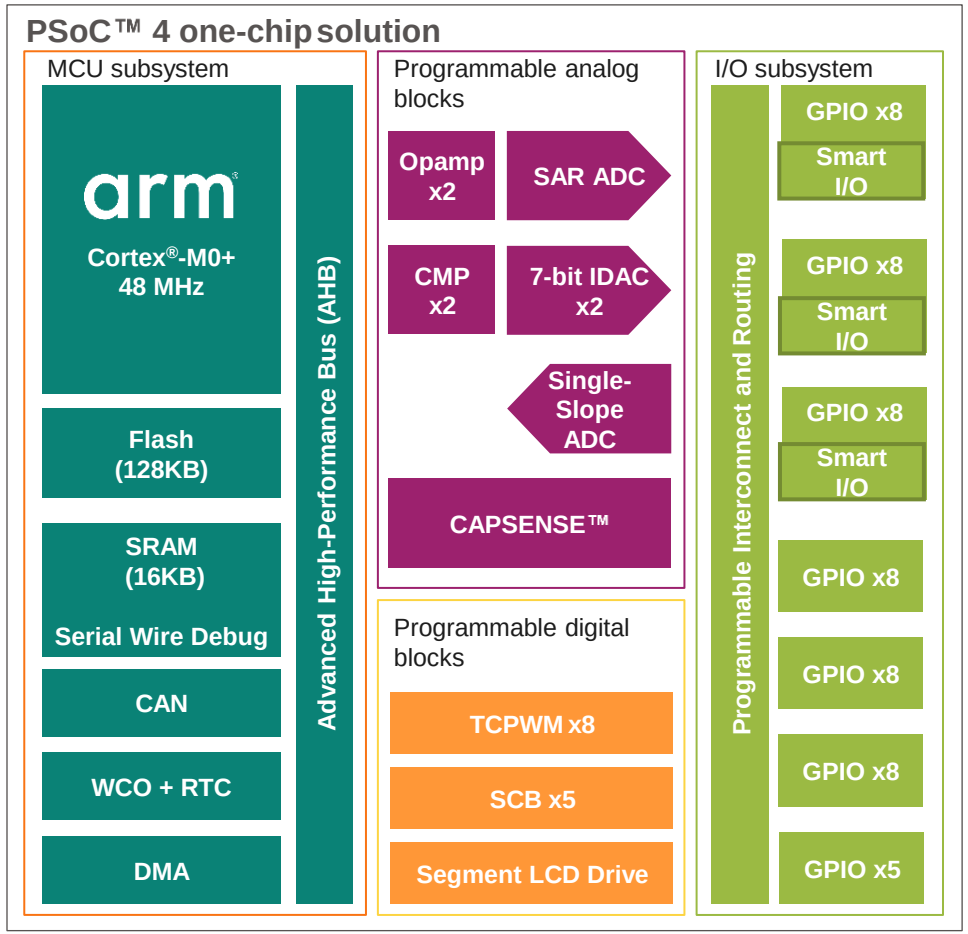

Availability

In Production

Copyright © Infineon Technologies AG 2024. All rights reserved.

Marketing Part Number Decoder

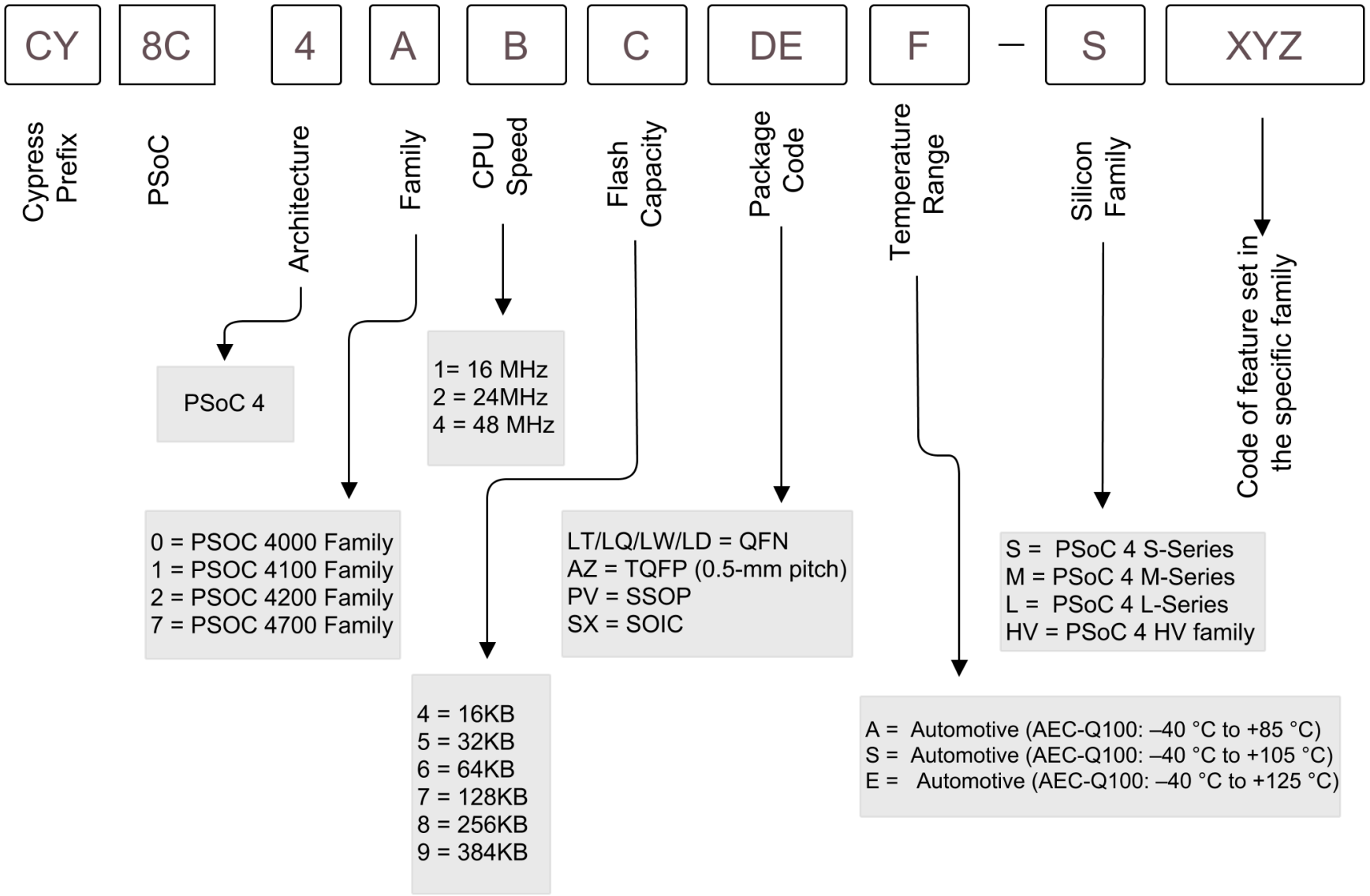

Copyright © Infineon Technologies AG 2024. All rights reserved.

Automotive PSoC™ 4 packages
Optimized package variants for specific application needs

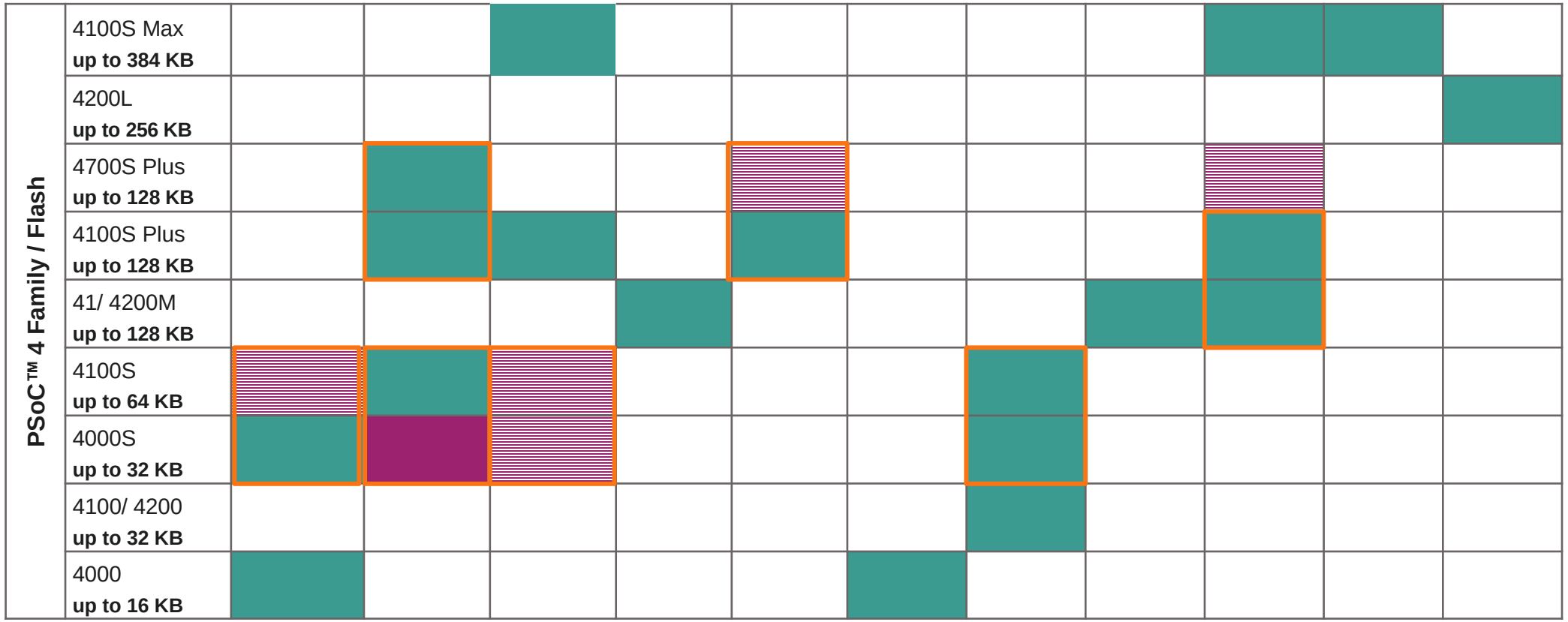

Pins	24	40	48	56	64	16	28	48	64	100	124
Package	QFN					SOIC	SSOP	TQFP			VFBGA
Body Size (mm)	4 x 4	6 x 6	7 x 7	8 x 8	9 x 9	3.8 x 9.9	7.5 x 10.3	7 x 7	10 x 10	14 x 14	9 x 9
Pitch (mm)	0.5	0.5	0.6	0.5	0.5	1.27	0.65	0.5	0.5	0.5	0.65

Pin compatible | Qualified | Under Qualification | Please reach out to marketing with Business Case

Copyright © Infineon Technologies AG 2024. All rights reserved.

PSoC™ 4700S Plus Solution Examples

Steering wheel HMI

PSoC for Steering Wheel HMI

Buttons/Sliders/TP



- **CapSense for touch**
- **HMI to control infotainment system / cluster setting**
- **Cruise control settings as well**

Mass production at US and Europe OEMs
Multiple DWINs across the world

Force-sensing, haptics



- **Force-sensing, haptics to avoid accidental touches and provide mechanical button-like feedback**

Mass production at US
Partner support for reference designs

Infineon @ EW 2020

Steering wheel demo with PSoC 4100S Max



Integration of MCU, Flash, Analog Frontend, Car Communication

Why PSoC 4700S Plus?

#1

OEM proven solution for HMI in steering wheels

- Touch-sensing buttons/sliders/touchpads with very **thick overlays (>5mm)+thick gloves (>5mm)+** can be supported by **CapSense**
- **High refresh rates** to provide intuitive / responsive HMI
- **Support force-sensing** with **CapSense** (capacitive) or **InductiveSense**
- Drive **haptics** motors with **PWMs** or in somecases integrated **DACs**
- Upto **128KB** of **Flash**,upto **8KB** of **SRAM**
- **SPI,I2C,UART,LIN Slave,** for car communication
- **Single chip Solution :** capacitive touchpad + inductive sensing (MagSense v2) + haptic feedback control (TCPWM).
- **AEC-Q100 qualified**

Copyright © Infineon Technologies AG 2024. All rights reserved.

PSoC™ 4700S Plus solution example: Steering wheel buttons, sliders, and touchpads

smart sensor and controller	
› MCU	› Arm® Cortex®-M0+ MCU with DMA › Up to 64KB / 128KB flash
› CAPSENSE™ (MSC)	› Supports buttons, sliders, and small touchpads › Thick overlay and glove support › ISO 26262- Ready
› INDUCTIVE SENSE	› Provides superior noise immunity › Can reliably detect metal deflection under 190 nm › automatically calibrates the solution to compensate for the manufacturing variations
› PWM	› Controls haptic actuator › Controls LED lighting

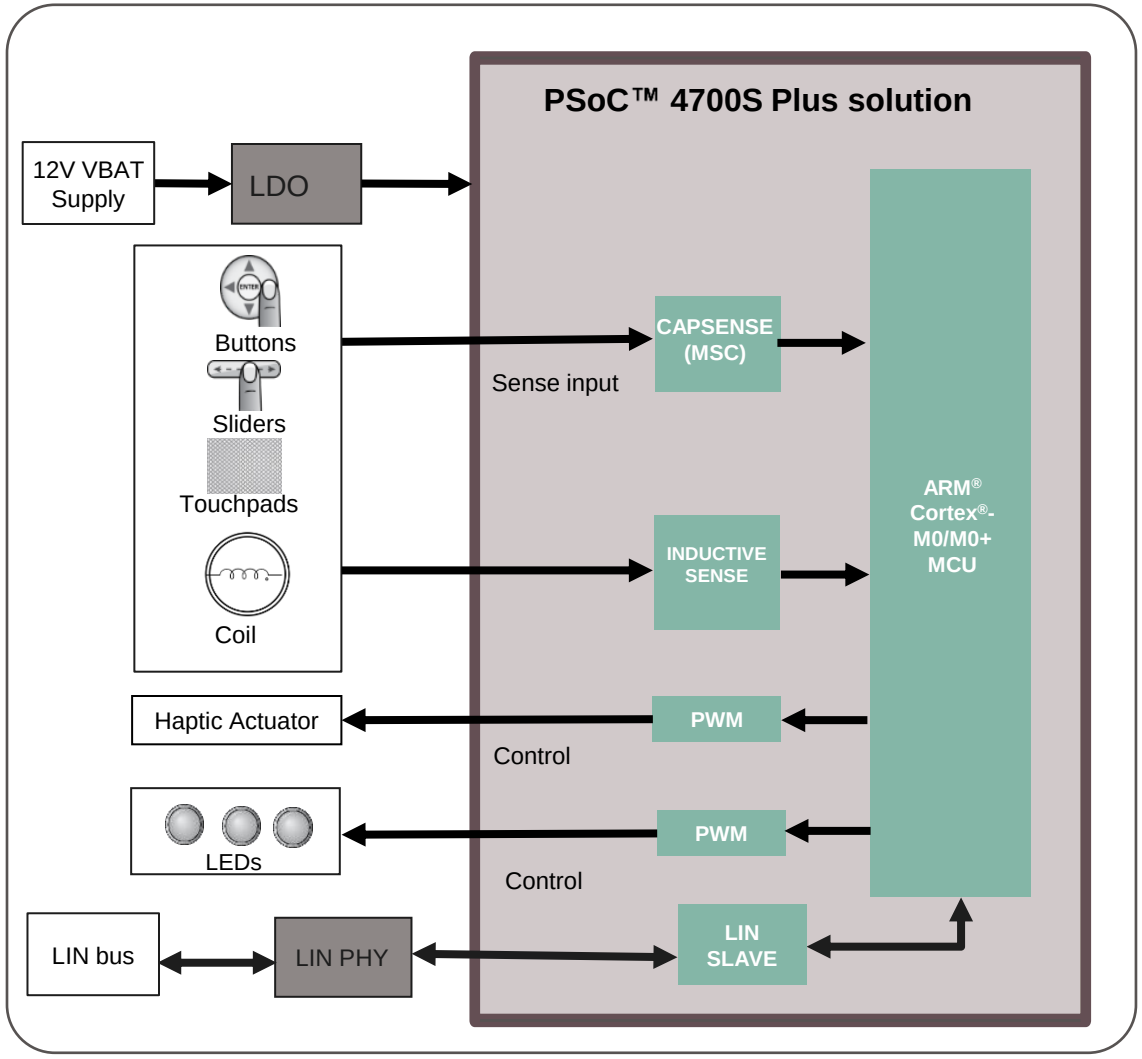

Copyright © Infineon Technologies AG 2024. All rights reserved.

Applications

Force Sensing over Touch Screen

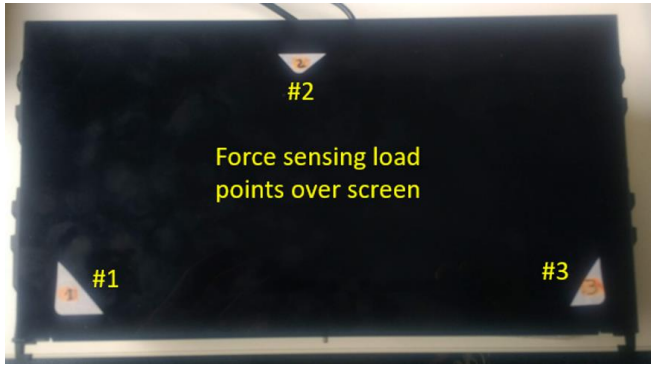

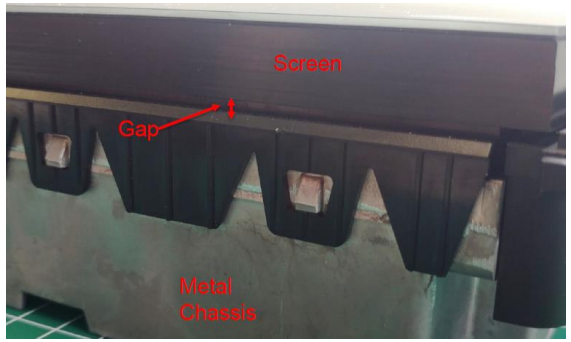

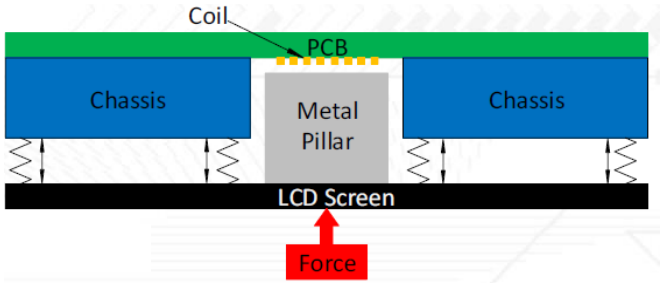

AirCon Controls: Knobs, Sliders



Flow Meter

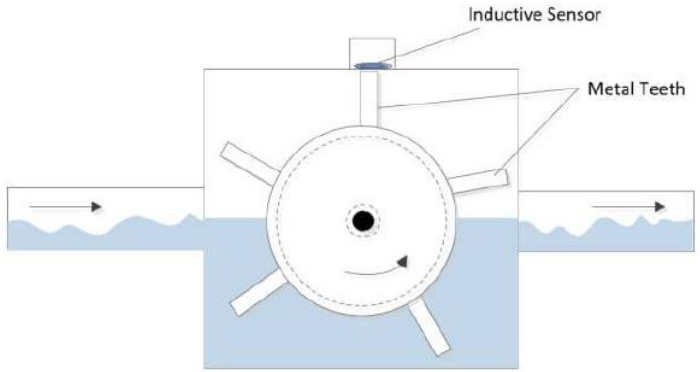

Hybrid Sensing



Liquid Level Sensing

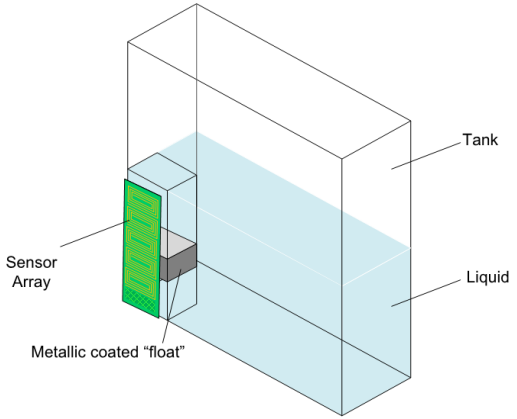

Copyright © Infineon Technologies AG 2024. All rights reserved.

Development Tools

Inductive Sensing Evaluation Kit-148

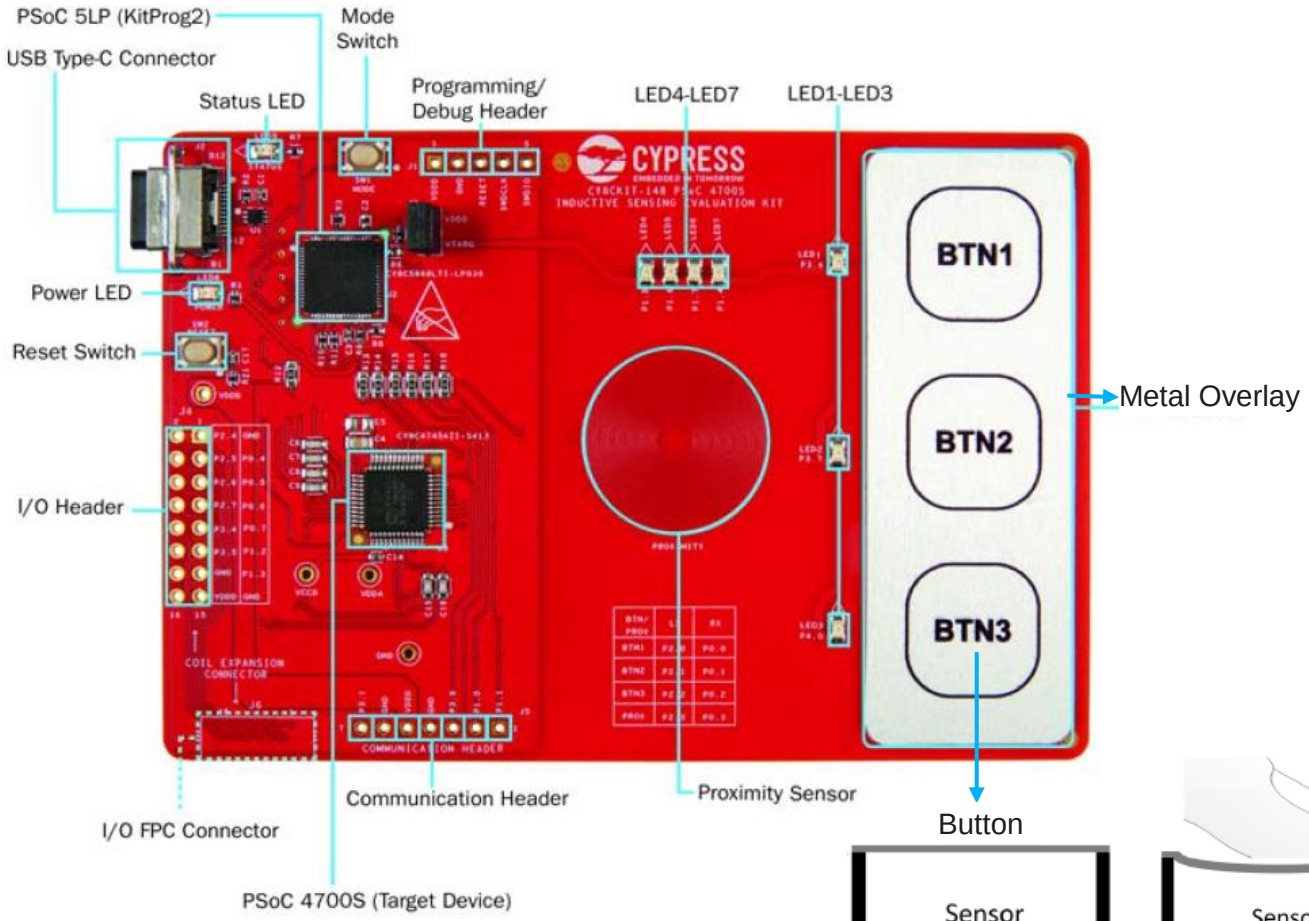

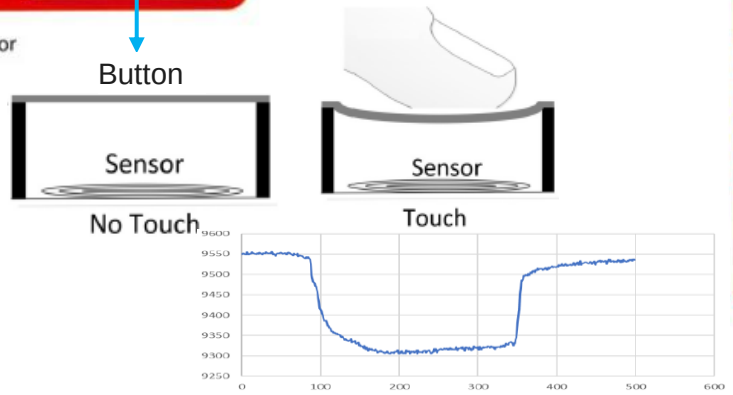

Proximity Sensing

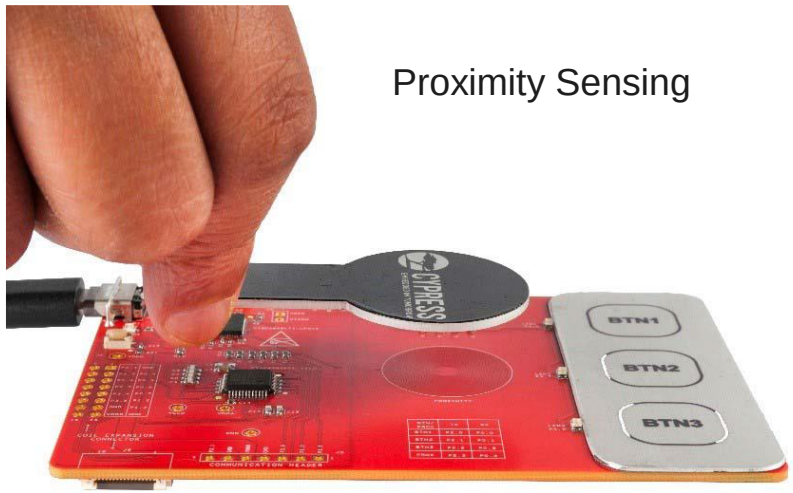

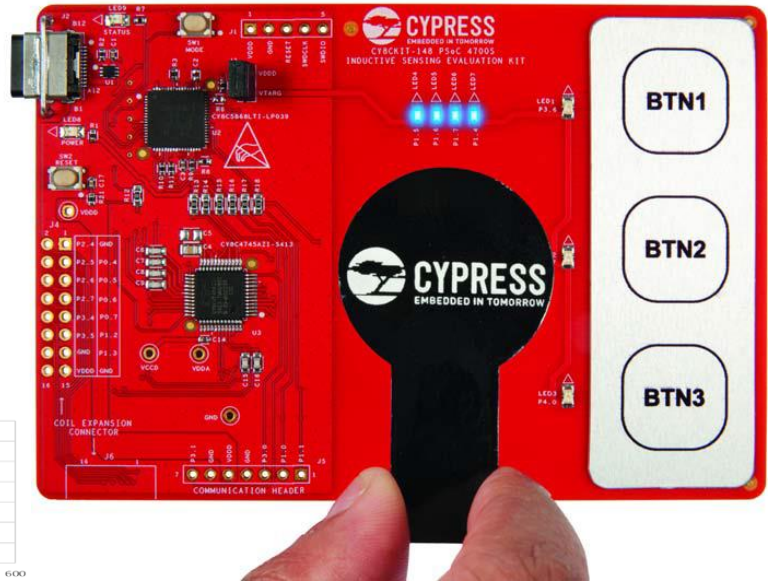

Copyright © Infineon Technologies AG 2024. All rights reserved.

Kit-148 Expansion Board:

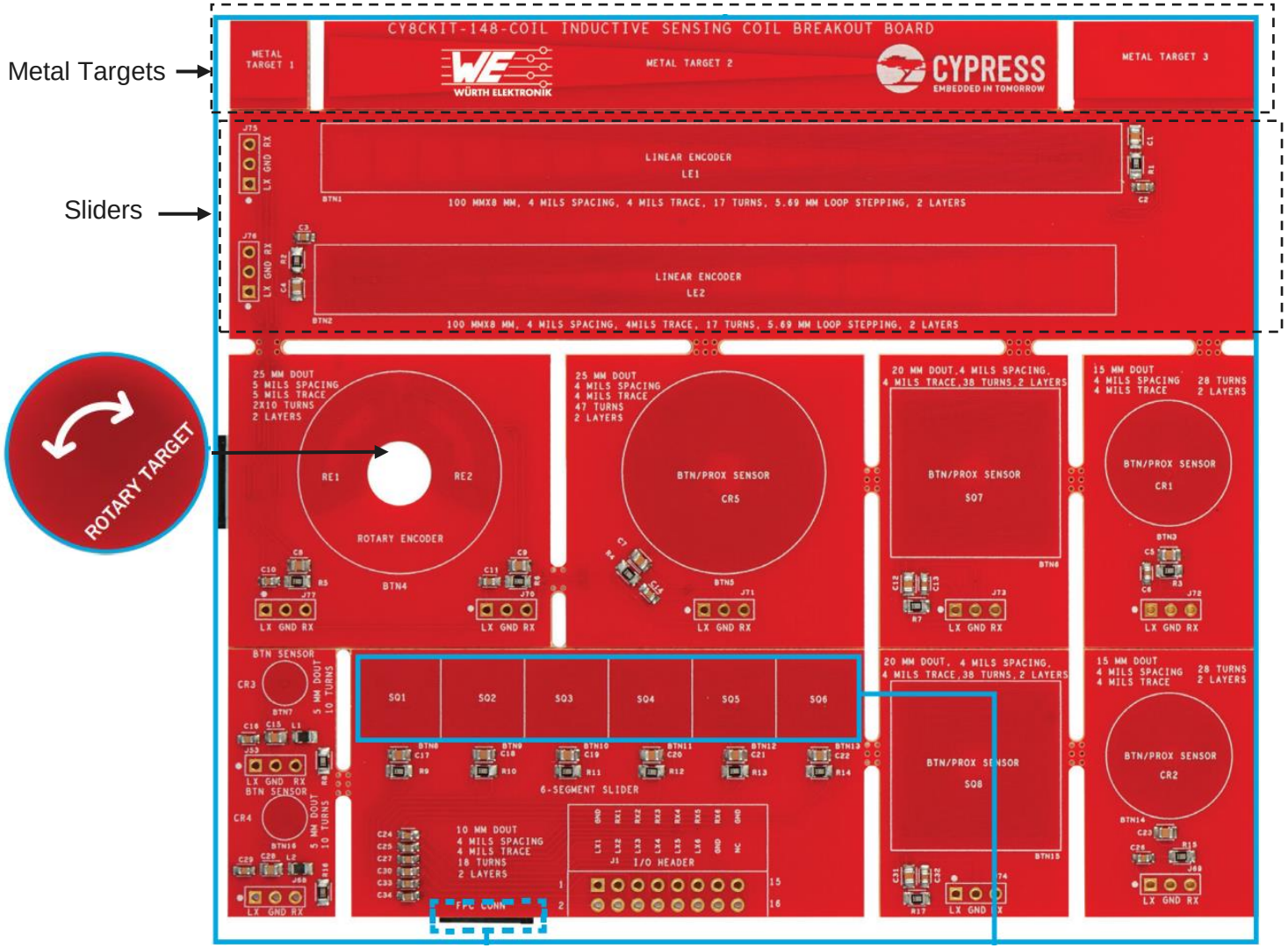

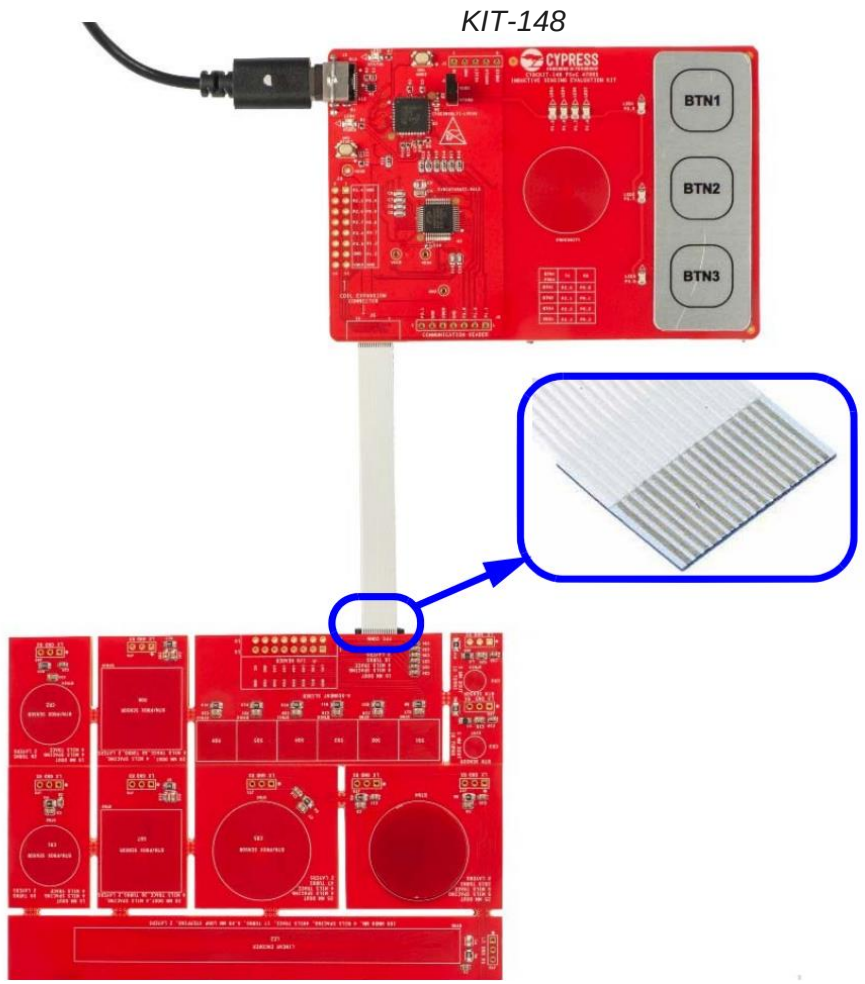

Copyright © Infineon Technologies AG 2024. All rights reserved.

PSoC Creator IDE: Firmware Component with Auto-calibration

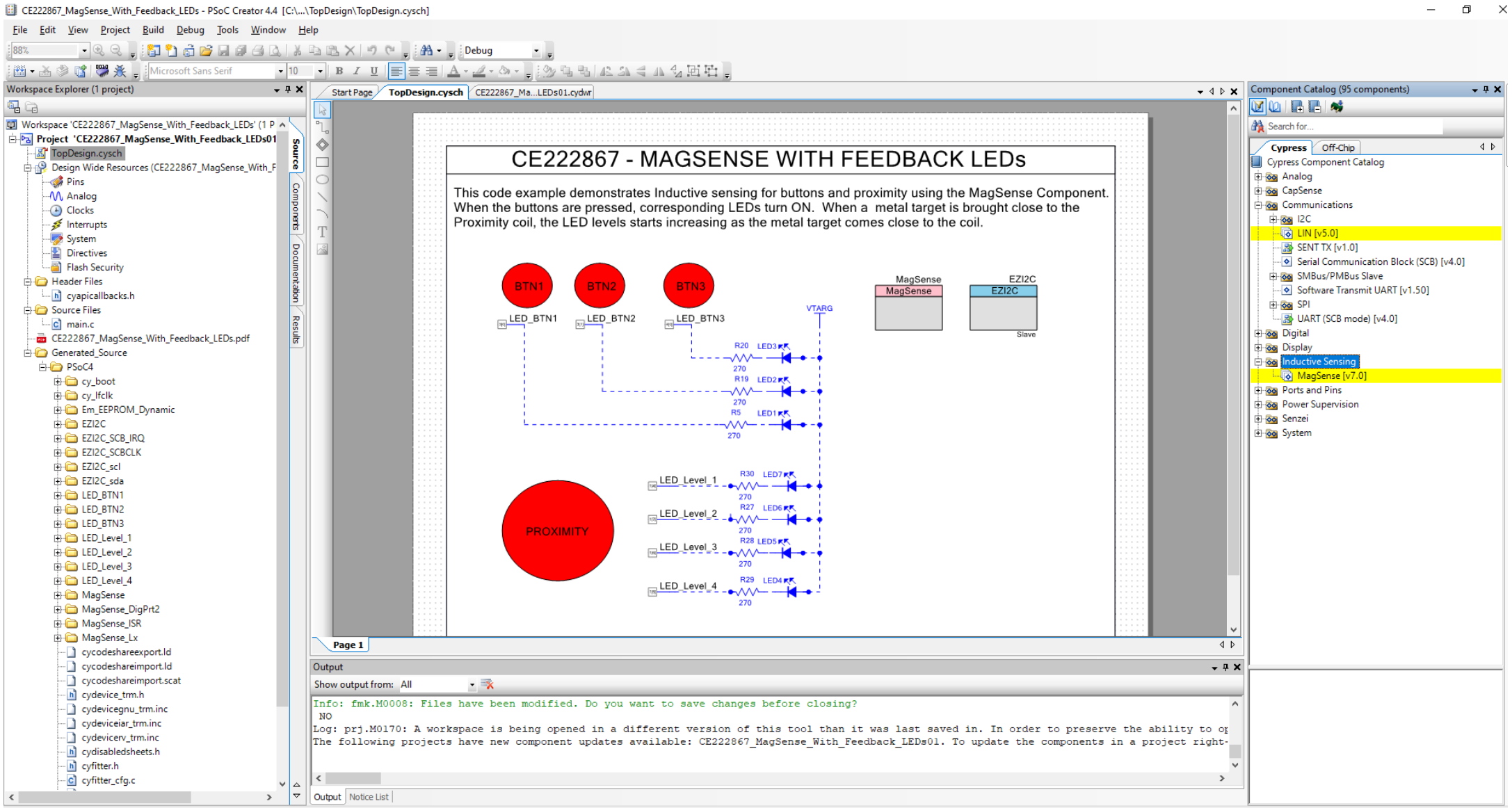

Copyright © Infineon Technologies AG 2024. All rights reserved.

Tuning Calculator Spreadsheet

PSoC 4700 TUNING CALCULATOR

INPUT PARAMETERS

Enter coil Inductance [L]	10	µH
Enter coil Series resistance [Rs]	4	Ω
Enter desired resonant frequency [f_0]	1000	kHz
Enter tank amplitude [V_{AMP}]	0.6	V
VDDA	1.8	V

SENSOR CONFIGURATION

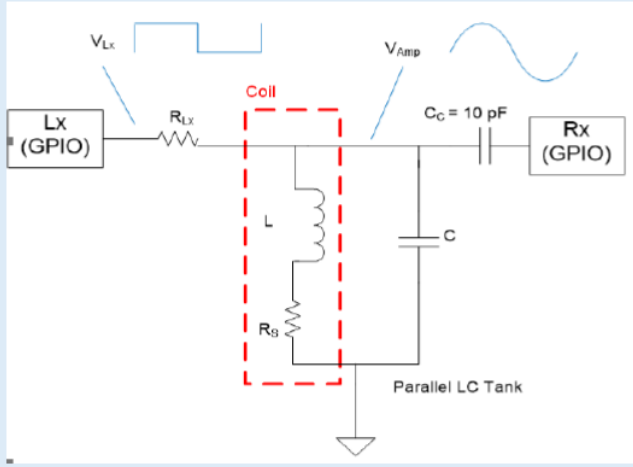

OUTPUT PARAMETERS

Calculated resonant capacitor	2.53	nF
Resonant Capacitor (C)	2.2	nF
Actual Resonant Frequency (f0)	1073	kHz
Resonant resistance [Rp]	987	Ω
TX resistance [R_{IX}]	1974	Ω
Coupling Capacitor (C_C)	33	pF

Input Parameters

Use Case	No. Turns	Turn space	Turn Width	Outer Diameter	Target distance	Copper Thickness	PCB Thickness Layers 1-2	PCB Thickness Layers 2-3	PCB Thickness Layers 3-4	# Layers (1-4)	Freq (f_0)
	#	s (µm)	w (µm)	dout (µm)	mm	t (µm)	T12 (mm)	T23 (mm)	T34 (mm)	#	Hz
1	23	101.6	101.6	12200	1.00	17.37	0.762	0.762	0.203	2	1.00E+06
2	23	101.6	101.6	12200	2.00	17.37	0.762	0.762	0.203	2	1.00E+06
3	23	101.6	101.6	12200	3.00	17.37	0.762	0.762	0.203	2	1.00E+06
4	23	101.6	101.6	12200	4.00	17.37	0.762	0.762	0.203	2	1.00E+06

Output Parameters

Proximity Sensing Calculations

Inductance	Ideal Tank Capacitance	Rdc	Skin Depth	Rs AC	Din/Dout	Q	Rp	Target distance	New Inductance	New Rp
µH	pF	Ohm	mm	Ohm	#	#	Ohm	mm	uH	Ohm
12.395	2043.59	10.70	0.0652	12.188	0.250	6.39	498	1.000	8.084	212
12.395	2043.59	10.70	0.0652	12.188	0.250	6.39	498	2.000	10.241	340
12.395	2043.59	10.70	0.0652	12.188	0.250	6.39	498	3.000	11.228	408
12.395	2043.59	10.70	0.0652	12.188	0.250	6.39	498	4.000	11.705	444

Copyright © Infineon Technologies AG 2024. All rights reserved.

References and Available Materials

- Inductive Sensing Design Guide
- Inductive Sensing KIT-148
- Inductive Sensing Breakout Coil Board
- PSoC 4700 Family for Inductive Sensing
- PSoC Creator Integrated Design Environment (IDE)
- Comparing capacitive and inductive sensing for embedded applications

Copyright © Infineon Technologies AG 2024. All rights reserved.

Q & A

Copyright © Infineon Technologies AG 2024. All rights reserved.


Infineon