

New Product Introduction

PSoC™ 4 High Voltage (HV) Precision Analog (PA) Overview

Q2, 2024

ATV MC SBS

public

Table of contents

1 PSoC 4 HVPA-144k: Intelligent Battery Sensor 3

2 Software Offering 16

3 Getting Started 26

Copyright © Infineon Technologies AG 2024. All rights reserved.

Table of contents

1 **PSoC 4 HVPA-144k: Intelligent Battery Sensor** **3**

2 Software Offering 16

3 Getting Started 26

Copyright © Infineon Technologies AG 2024. All rights reserved.

Intelligent Battery Sensor (IBS): Application Overview

- High precision measurement of **voltage, current, and temperature** with simultaneous measurement of V and I and wide dynamic current range
- Calculates State-of-health (**SOH**), State-of-charge (**SOC**), State-of-function (**SOF**) and 12V battery internal resistance
- Reports data to Engine Control Unit (ECU) via serial **LIN interface**
- Attaches directly to 12V negative battery terminal with a current sense shunt resistor between the terminal and negative battery cable

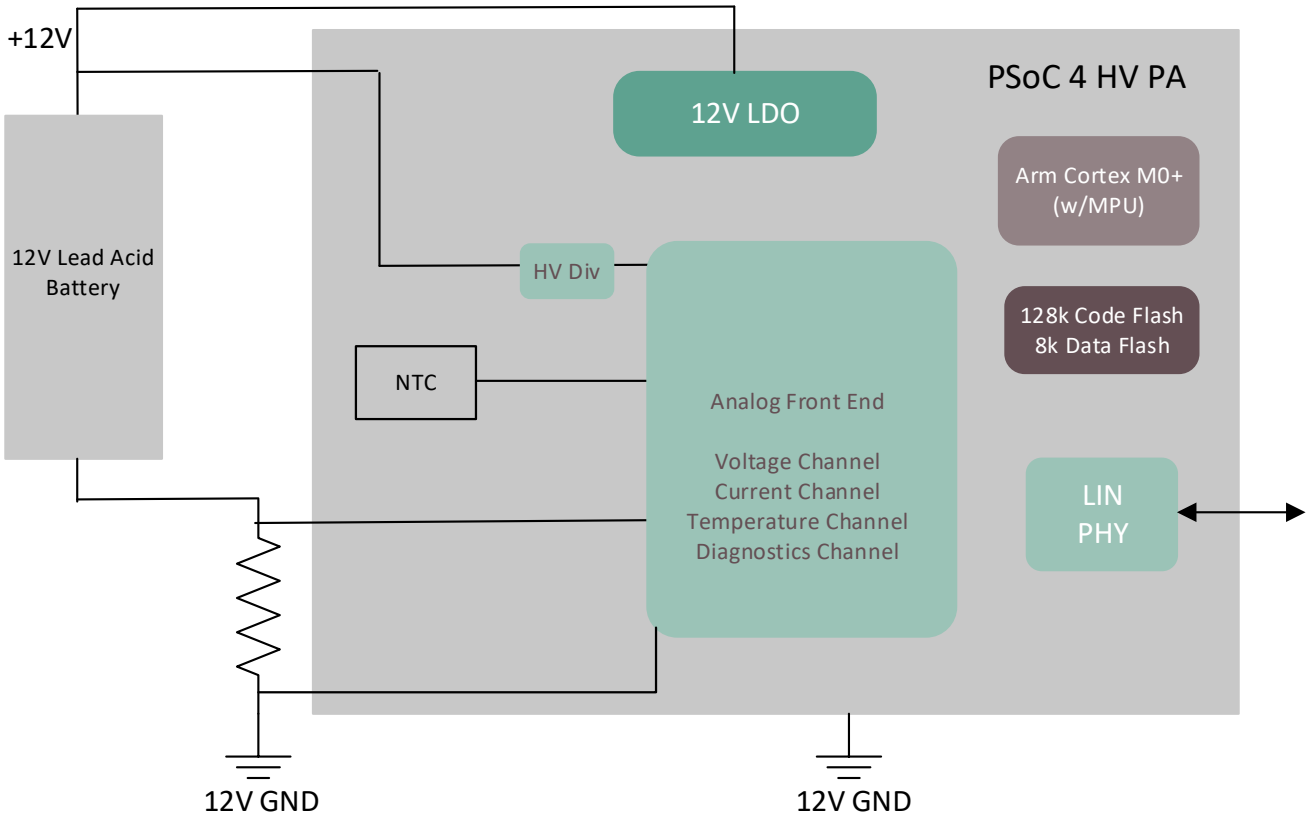

Copyright © Infineon Technologies AG 2024. All rights reserved.

PSoC 4 High Voltage (HV) Precision Analog (PA)

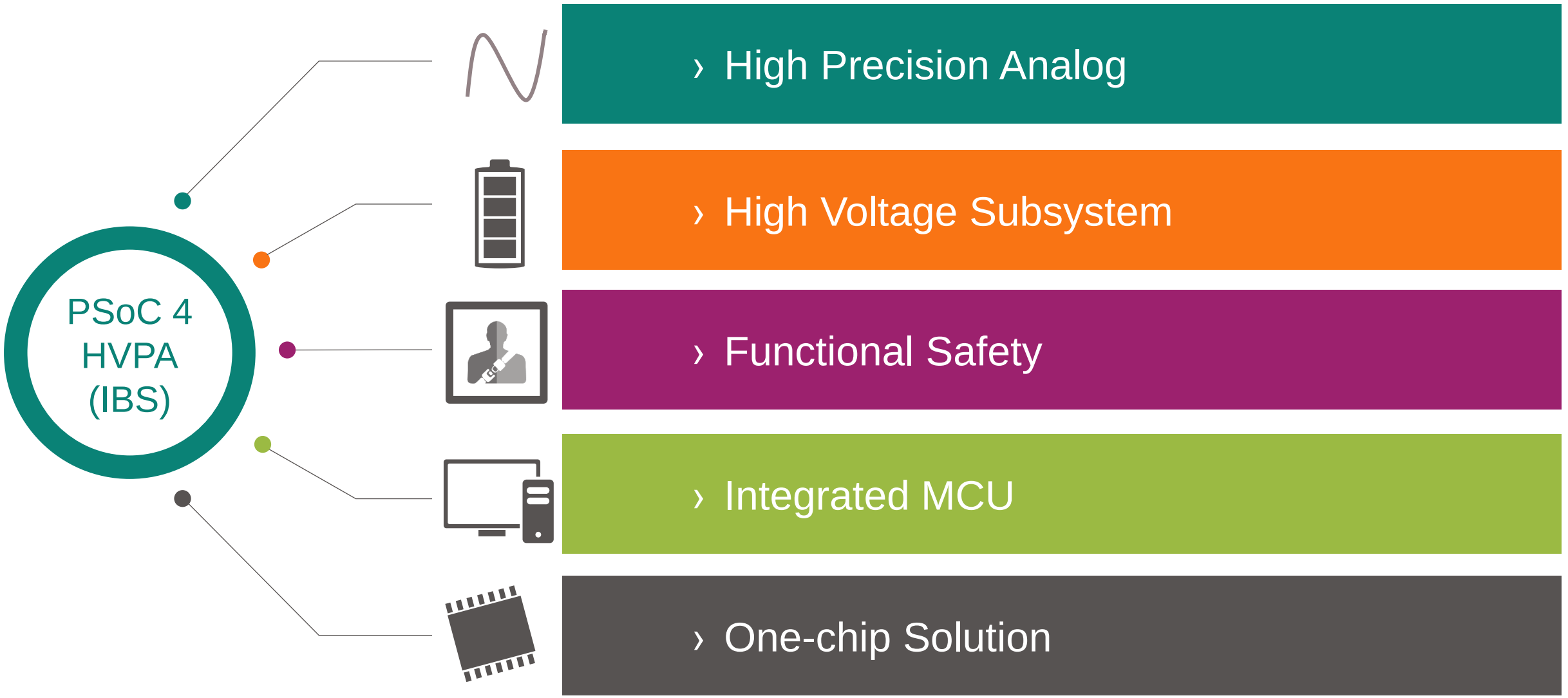

Copyright © Infineon Technologies AG 2024. All rights reserved.

High Precision Analog

Current

- Measurement range: +/-1500A
- Measurement accuracy up to 0.3%
- Automatic Gain Control

Voltage

- Measurement range: 3.6V – 28V
- Measurement accuracy up to 0.15%

Precision Analog Channel Subsystem

Temperature

- Internal temperature sensor Measurement accuracy: +/-2.5°C (-40 to +125°C)
- External temp sensor Measurement accuracy (Vtemp): +/-1%

Diagnostics

- Open Shunt detection
- Vref comparison (primary and secondary)
- Channel cross-checks

Copyright © Infineon Technologies AG 2024. All rights reserved.

Precision Analog Channel Subsystem (PACSS)

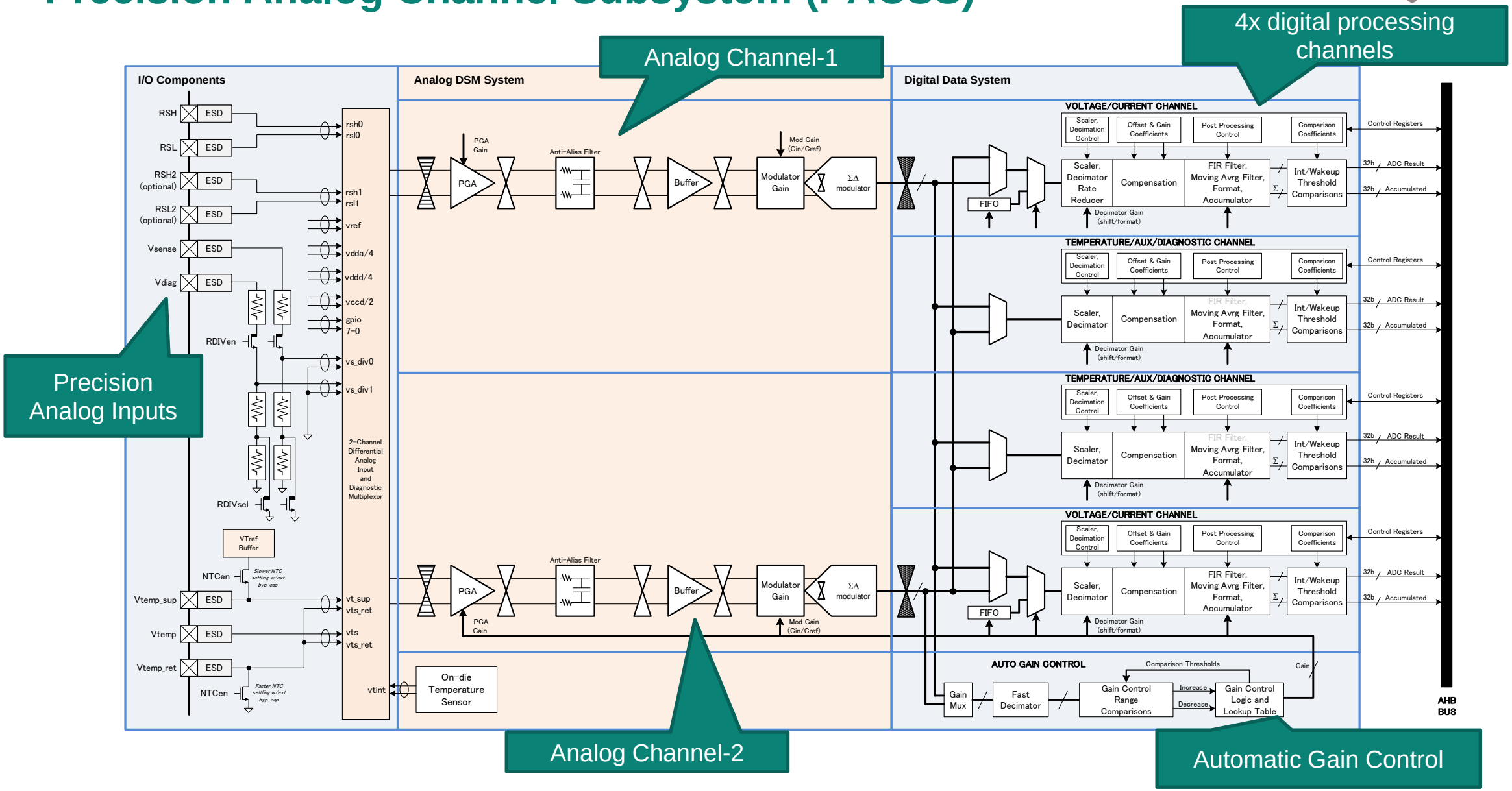

Copyright © Infineon Technologies AG 2024. All rights reserved.

High Voltage Subsystem

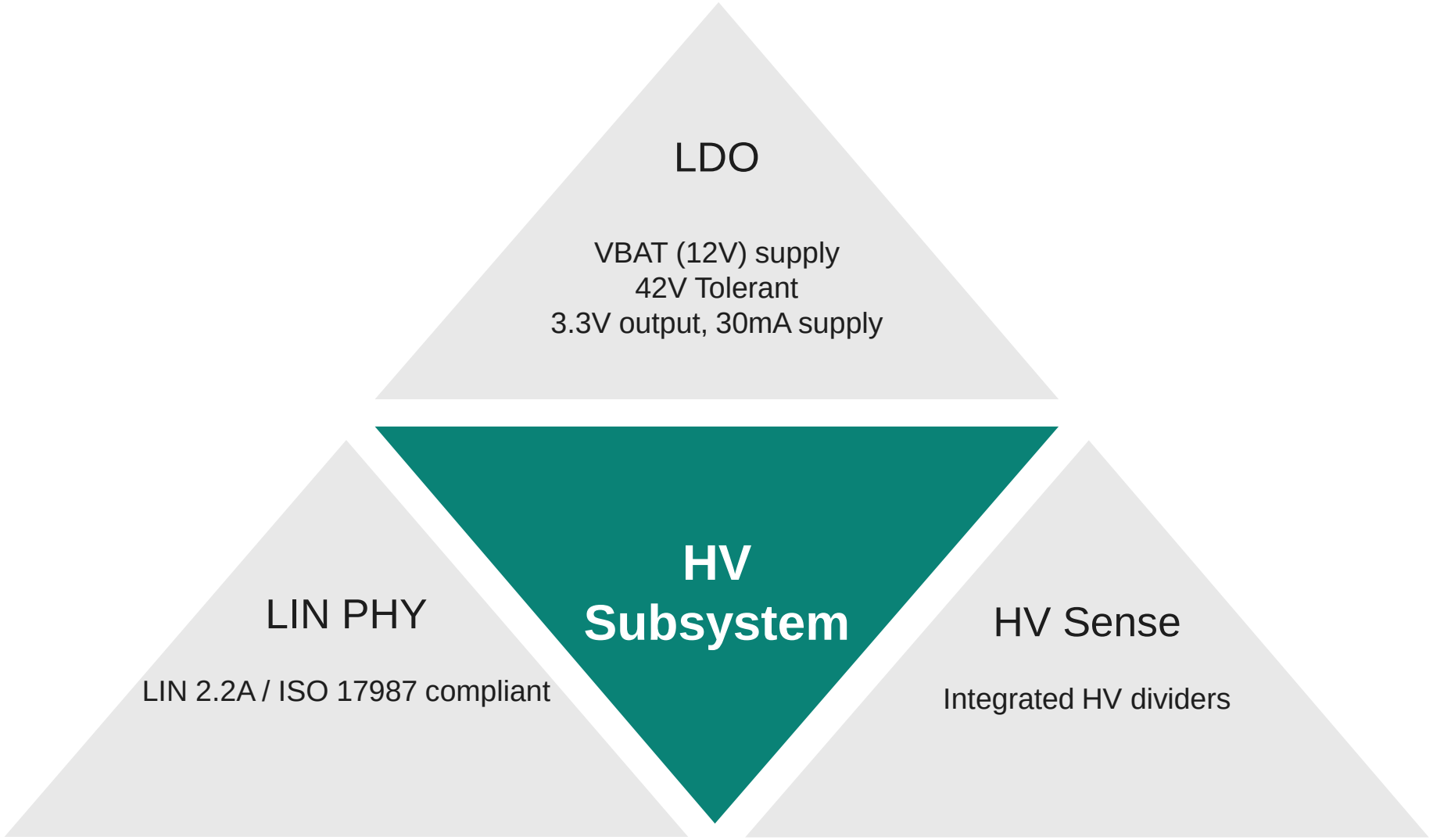

Copyright © Infineon Technologies AG 2024. All rights reserved.

Functional Safety: A Holistic System-level Approach

- ISO 26262 Safety-Element-Out-of-Context product
- Supports safety critical applications up to ASIL-B
- Software is developed according to ISO 26262
- Supplemented by safety documents

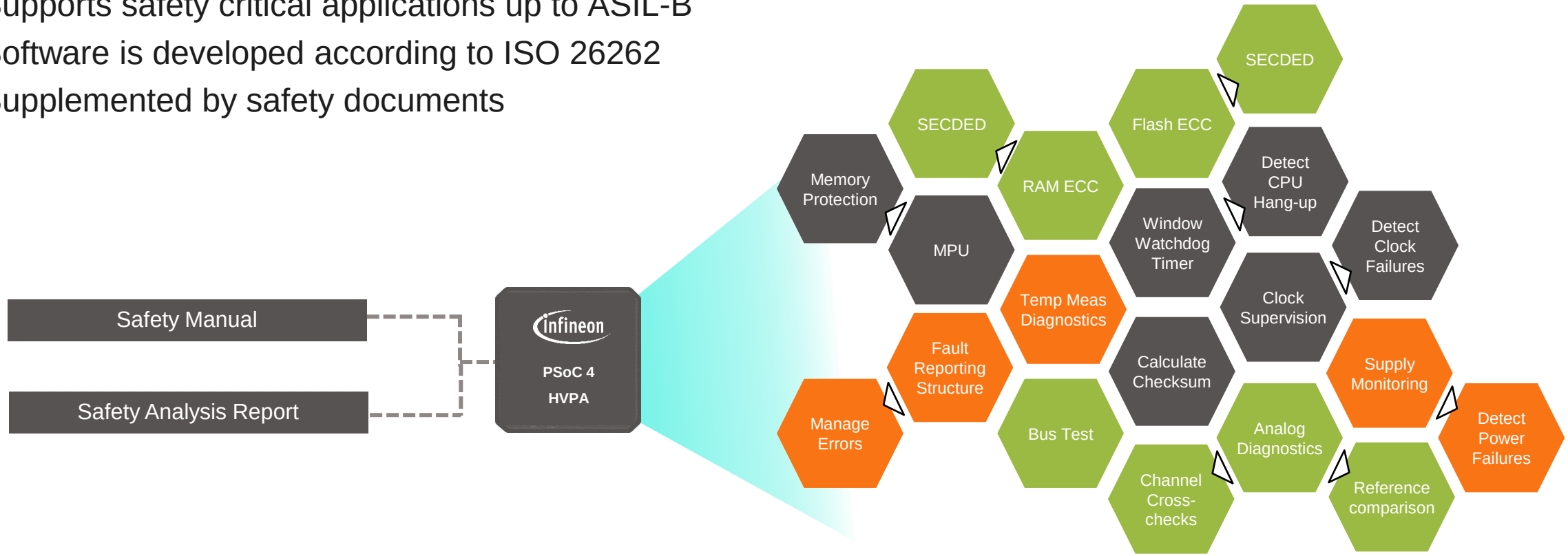

PSoC 4 HVPA Offers Safety Hardware and Collaterals

Copyright © Infineon Technologies AG 2024. All rights reserved.

CPU Subsystem: Integrated MCU

Arm Cortex M0+
- CPU performance up to 48MHz
- DMA controller with 8 channels

Embedded Memory w/ECC
- Code flash up to 128k (expandable to 192k in the series)
- Data flash up to 8k (expandable to 16k in the series)
- SRAM up to 8k (expandable to 16k in the series)

Memory Protection Unit (MPU)
- Protect memory regions by defining different access permissions in privileged and unprivileged access levels

Fault Subsystem
- Cause a reset, give a pulse indication, or trigger another peripheral
- Centralized nature allows for a system-wide, consistent handling of faults

Copyright © Infineon Technologies AG 2024. All rights reserved.

PSoC 4 HVPA: Preferred Solution for IBS



High Precision Analog

- Precise analog measurements with 2x Delta-Sigma ADCs and 4x hardware digital processing channels
- Optimized for battery V, I and T measurements

Functional Safety

- ISO 26262 for ASIL-B compliance
- Analog diagnostics, ECC for memories, Window watchdog

One-Chip Solution

- Operates directly off the 12V battery, Integrated LIN PHY
- Integrated MCU
- Compact QFN package

Copyright © Infineon Technologies AG 2024. All rights reserved.

AFE w/ Integrated Digital data system

Filtering & post-processing

4x Digital channels (DCHANx) for 2x ADCs (Delta-Sigma Modulators)

- The digital channel converts the ADC output data and includes **scaling**, **filtering**, and **compensation**
- Compares ADC values with thresholds to generate interrupts when thresholds are exceeded
- Configurable for any analog measurement: **Voltage / Current / Temperature**
- Offset & Gain correction managed with digital channels
- Integrated FIR Filters for 2x channels
- Accumulators used for **Coulomb Counting**
- **Peak Current detection** for contactor switch / MOSFET age monitoring

Simplified view of the HVPA AFE

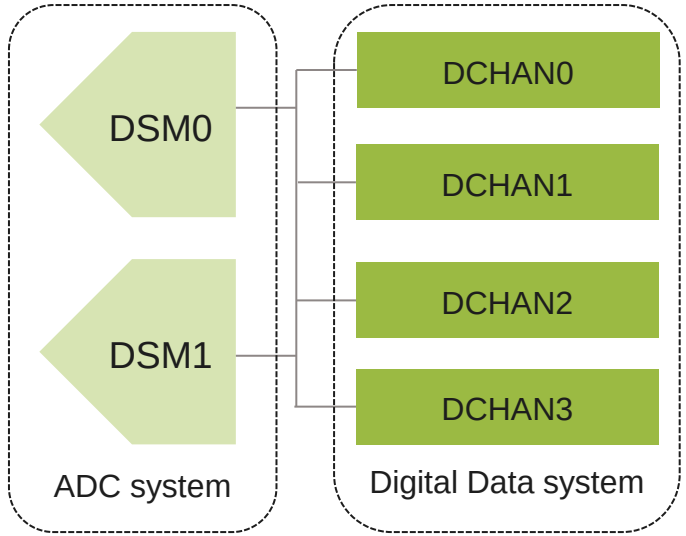

✓ **Digital data system performs acquisitions, filtering, post-processing, and data storage without any software intervention enabling real-time measurements**

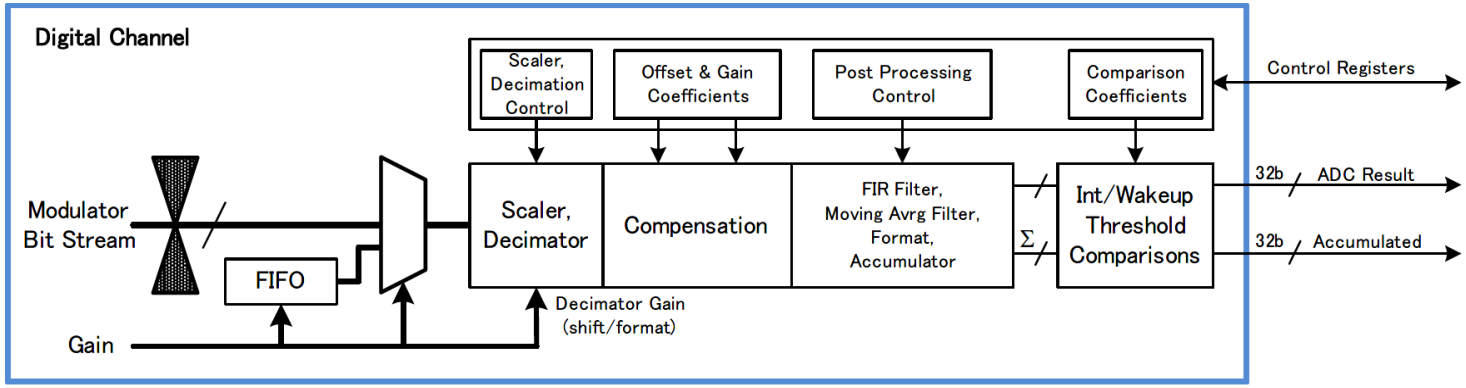

Copyright © Infineon Technologies AG 2024. All rights reserved.

AFE w/ Automatic Gain Control

Manage the dynamic changes in currents efficiently with high accuracy

AGC: Dedicated hardware for automatic gain control

- Enables measuring large starting currents or small battery-off currents
- A hardware mechanism to detect the saturation of analog channel (ADC) & automatically adjust the gains without losing the transient current samples will help in **accurate current measurement**
- HVPA AGC block has a fast ADC to measure the saturation of analog channel & update the current channel's gain using a Look-up Table
- Updates the digital channel's (from digital data system) scaling (left or right shifts as the supported gains are powers of 2) automatically hence doesn't lose the transient current information

✓ **AGC enables full autonomous control of the AFE with no software intervention / additional processing required, and achieve high accuracy in current measurements**

Dynamic change in currents across shunt

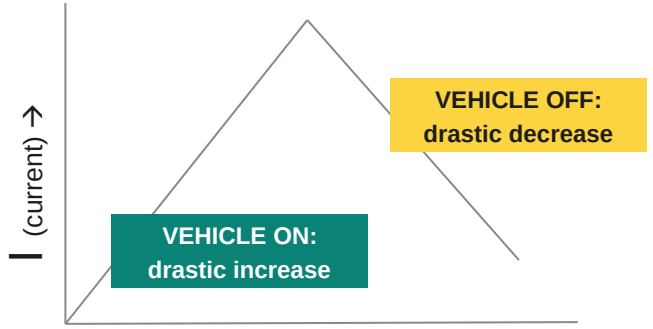

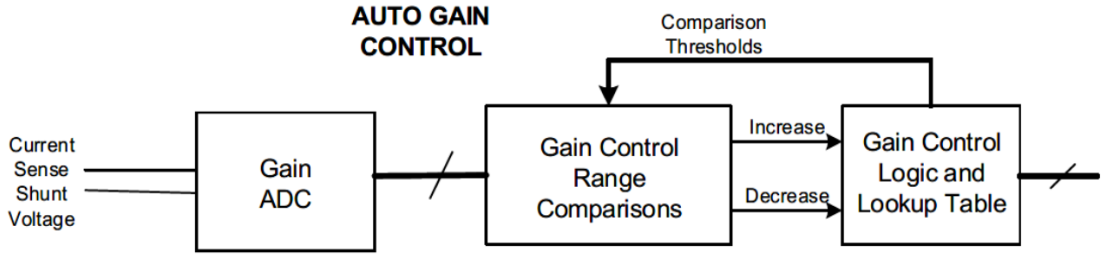

Copyright © Infineon Technologies AG 2024. All rights reserved.

Pack Monitoring: Isolation Resistance (IsoRes)

Measurement, Calculation & Control integrated

- HV battery pack needs to be isolated from the LV (12 V) circuitry for human safety and hence the leakage from HV battery to the chassis ground (LV domain) needs to be monitored.
- FMVSS 305: 500 Ω/V (2 mA leakage current) of the battery pack voltage
  - 1000 V battery -> 500 Ω/V
- PSoC measures VBAT1_adc and VBAT2_adc with switch M1 on and off to determine R_{ISO+} and R_{ISO-}
- Accuracy of R_{ISO} measurement depends on the accuracies of external R resistors and switch M1 of the leakage.
  - Could be calibrated for higher accuracy.
  - PSOC has 0.25% voltage accuracy at pin from 0V-1.2V.
- System specifications
  - R_{Iso_Res} = 100k – 2.5Mohms
  - Acc_{IsoRes} = ± 13%

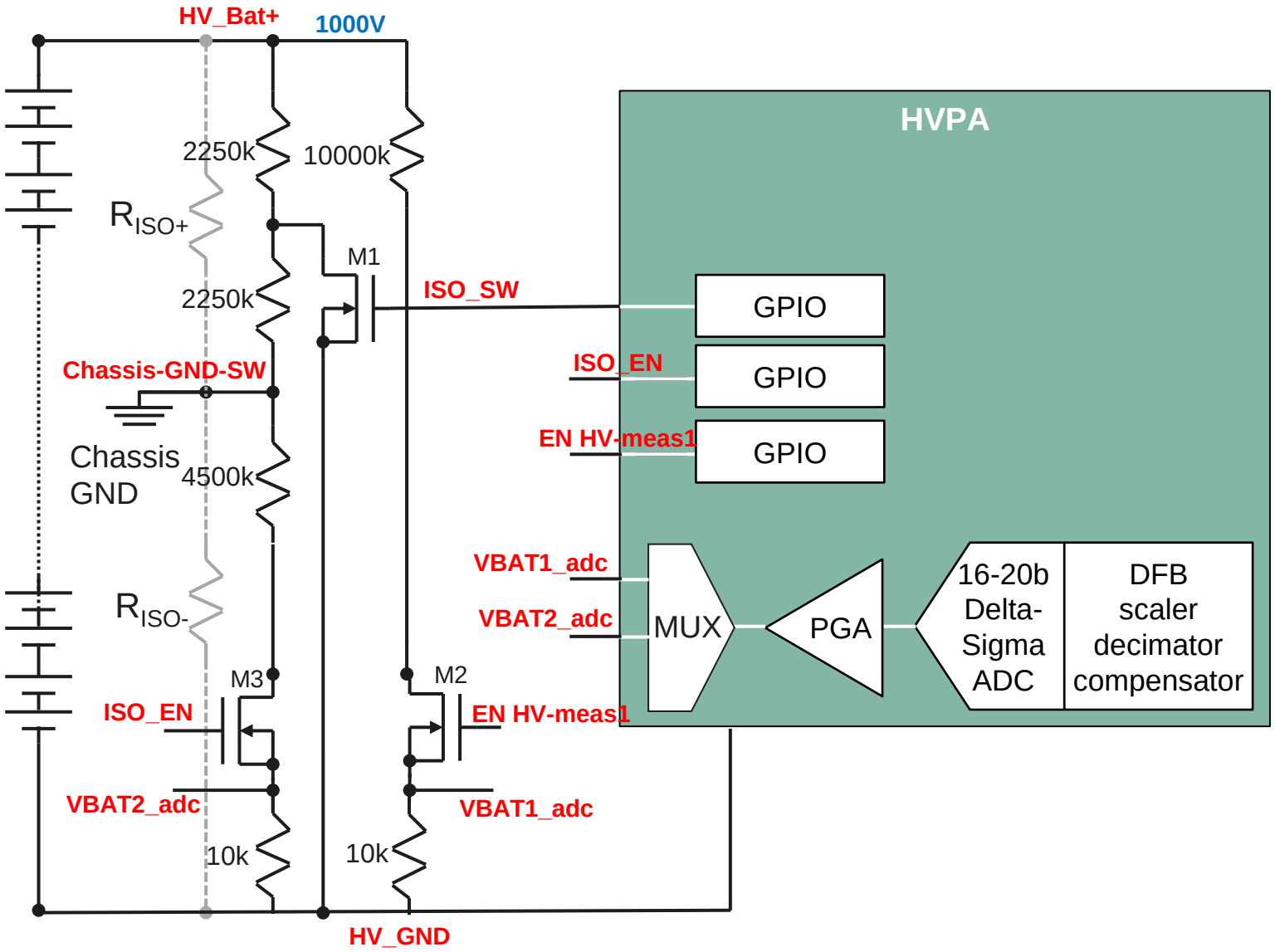

Copyright © Infineon Technologies AG 2024. All rights reserved.

PSoC 4 HVPA-144k

Precision Analog

Applications

Intelligent battery monitoring and management systems

Features

32-Bit MCU Subsystem
- 48-MHz Arm® Cortex®-M0+ CPU with DMA controller
- Up to 128KB Code Flash, 8KB Data Flash and 8KB SRAM, with ECC

Precision Analog Channel Subsystem
- Two 16-bit Precision ΔΣ analog-to-digital converters (ADC)
- Voltage Channel with High-Voltage input divider, Current Channel with automatic Gain
- Temperature and diagnostic channels
- Digital filtering, accumulators, and threshold comparisons on all channels

Programmable Digital Subsystem
- Four 16-bit timer/counter/pulse-width modulation (TCPWM) blocks
- One independent Local Interconnect Network (LIN) block
- One serial communication blocks (SCB) that are configurable as I^2C, SPI, UART or LIN Slave

High Voltage Subsystem
- Operates directly off 12 V battery (tolerant up to 42 V), Integrated LIN Transceiver

ASIL-B Compliant

Packages
- 32-pin Wetable Flank QFN

I/O Subsystem
- GPIOs (up to 11)

Collateral

Datasheet: PSoC 4 HVPA-144k

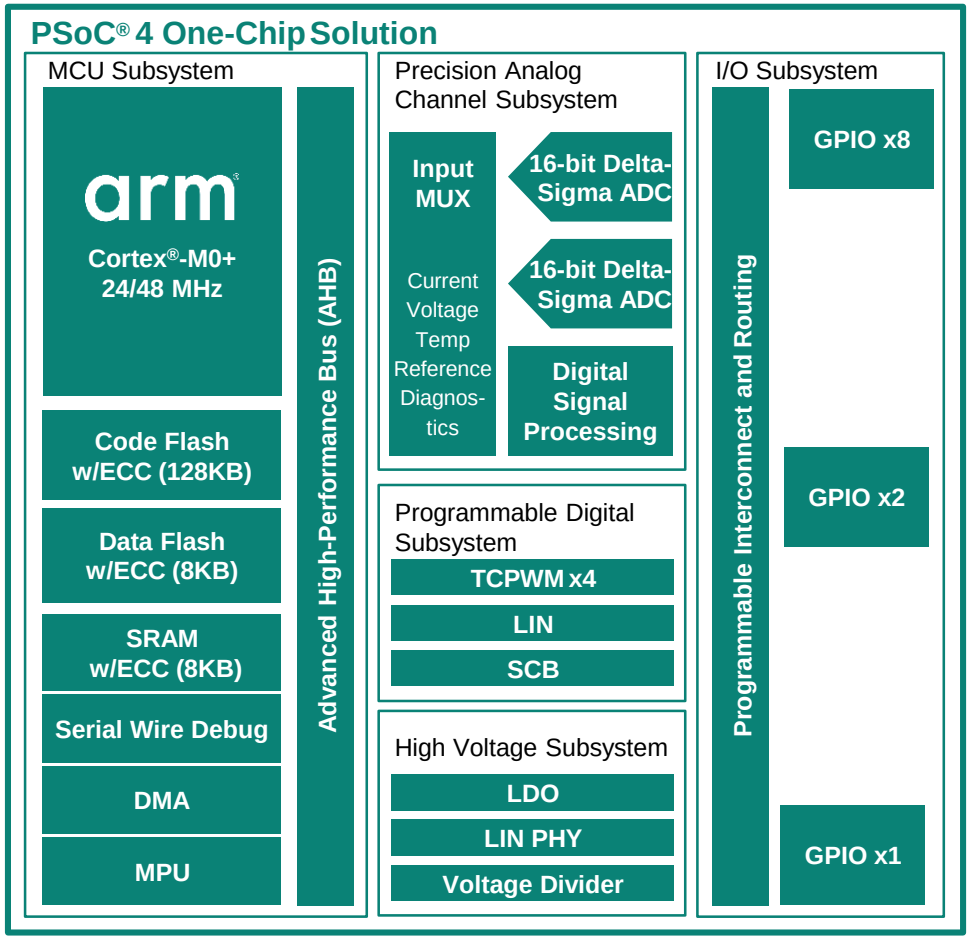

Copyright © Infineon Technologies AG 2024. All rights reserved.

Table of contents

1 PSoC 4 HVPA-144k: Intelligent Battery Sensor 3

2 **Software Offering** **16**

3 Getting Started 26

Copyright © Infineon Technologies AG 2024. All rights reserved.

Automotive quality software support for PSoC 4 HVPA

Software package offered by Infineon for PSoC 4 HV devices are developed as per standard Automotive software development process. The software is ASPICE qualified (MISRA 2012 AMD1, CERT C) and ISO 26262 compliant.

PSoC™ Automotive Peripheral Driver Library (AutoPDL)

- **Complete package of low-level drivers** comprising analog, digital and communication components as well as Flash EEPROM emulation middleware
- **Enables shorter time to market** by reducing the customer development time
- **Functional Safety (ASIL-B) compliant software** built as per ASPICE standards, using FuSa compliant IAR compiler with safety features based on SEooC

PSoC™ Safety Library for Automotive PDL

- **Integrates critical safety tests** which are mandatory as per the hardware safety manual to achieve ASIL-B compliance
- **Enables shorter time to market** by reducing the customer development time
- **Enables safe operation of the chip** during start-up and runtime

Copyright © Infineon Technologies AG 2024. All rights reserved.

PSoC 4 HVPA Software: AutoPDL 1.x

ASIL & ASPICE compliant drivers and Middleware

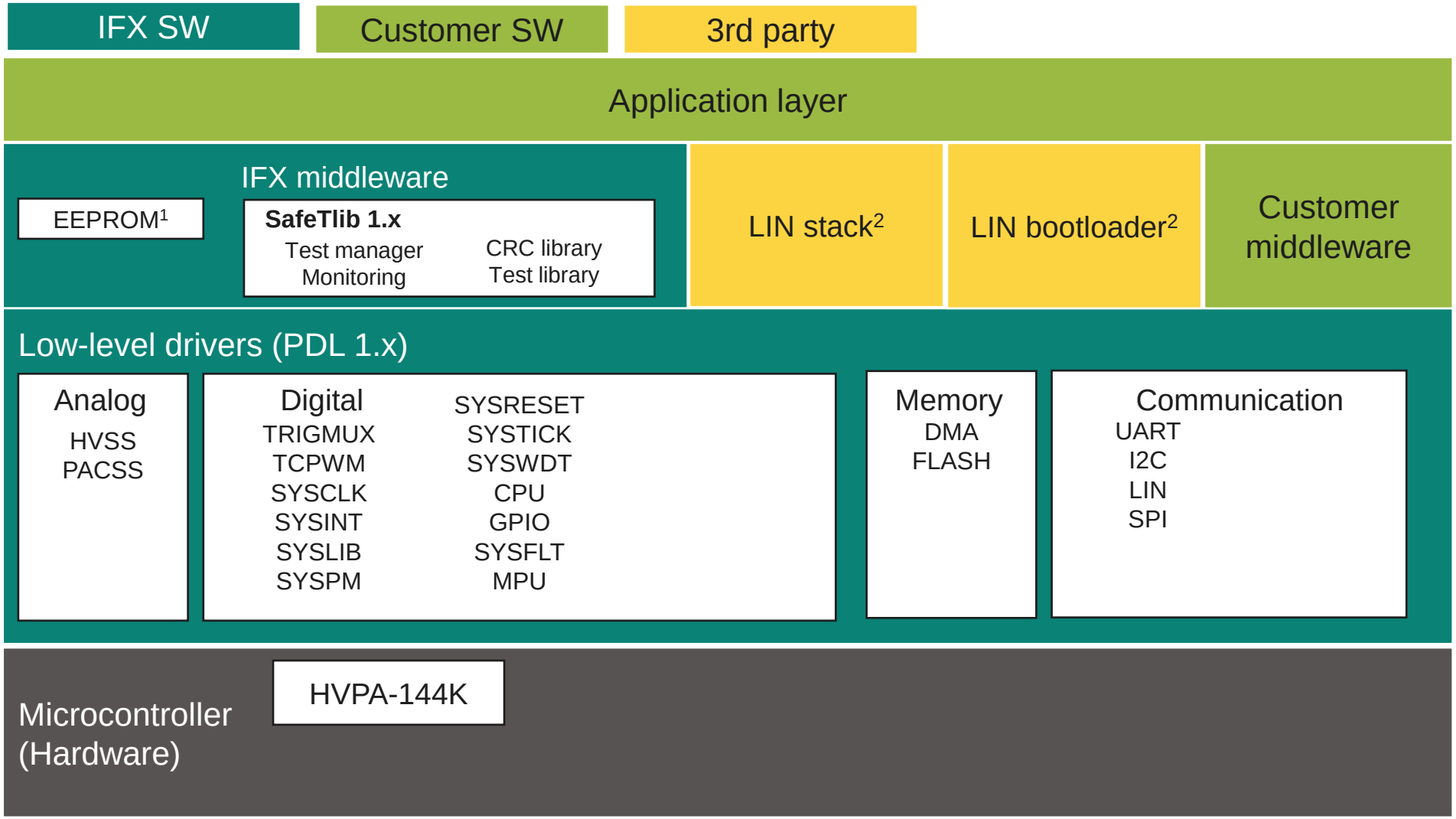

› Tools

- Compilers (IAR)
- IDE (IAR)
- Debugger / Programmer (IAR)

[1]EEPROM middleware is included in PDL package
[2]Contact marketing for commitment status with 3rd party

*Software/tools for getting started / evaluation (non-production usage, no warranty) are also supported (e.g. evaluation license of PDL, Auto Flash Utility, MiniProg4)

Copyright © Infineon Technologies AG 2024. All rights reserved.

Software / tool support summary

	HVPA-144K
Automotive qualified low level drivers	PSoC™ Automotive Peripheral Driver Library
Automotive qualified Middleware/ Configurator/Tuner	PSoC™ Safety Library for Automotive PDL
Quality	ASPICE L2
Functional safety	ASIL-B
Compilers	IAR
IDE	IAR
Debugger / Programmer	IAR
Protocol SW MW/stack	LIN: IHR / Vector
Bootloader	LIN: IHR
Evaluation purpose / Getting started (non-production usage, no warranty)	PDL: Evaluation license Programmer SW: Auto Flash Utility Programmer HW: MiniProg4, I-Jet

Copyright © Infineon Technologies AG 2024. All rights reserved.

PSoC™ Automotive Software value proposition

- Features / Value for Customer
  - IFX has unique expertise on the PSoC concept and hardware structure. Nobody is better prepared to enable this hardware with optimized driver software.
  - Infineon software team has an excellent track record in Automotive Software development.
  - Infineon's PSoC SW products are in house developments
  - Customers start with a qualified driver layer and focus on their application development
  - Infineon SW products are supported by industry standard tooling (IAR Embedded Workbench for Arm, Function Safety release with compiler and debugger)
  - Customer's "cost of ownership" is reduced because PSoC Automotive PDL replaces customer's own development of ASIL compliant drivers (huge investment)
  - Shorter Time to Market
  - Life Cycle Support: maintenance is offered, assuring that weaknesses in the software, whenever reported in the life cycle are being addressed (
- Safety
  - Software products have been developed according to ISO26262 (2018) as SEooC for applications with safety targets up to ASIL B
- Coding Standards:
  - MISRA 2012 AMD1, CERT C "Rules" (L1, L2, L3) are applied, Deviations/Warnings documented in a report
- Compiler version
  - IAR Embedded Workbench for Arm, Functional Safety, version 8.50

Copyright © Infineon Technologies AG 2024. All rights reserved.

PSoC™ Safety Library for APDL: Product Overview

Value for customer

- Safety Argumentation becomes much simpler
- Safety Lib covers many requirements from the HW Safety Manual
- Customers do not need to develop the required test software on their own

Key features

1	Coverage of the safety requirements for integrator as documented in hardware safety manual, required from PSoC 4 HVPA
2	Enable safe operation of the chip (startup & runtime)

Key facts / Important to know

- ASIL B Safety claim
- ISO26262:2018 compliance, Safety features based on SEooC
- Uses AutoPDL (ASIL SW)
- MISRA 2012 AMD1, CERT C “Rules” (L1, L2, L3) are applied, Deviations/Warnings documented in a report
- Compiler version: IAR Embedded Workbench for Arm, Functional Safety, version 8.50

SW Architecture Overview

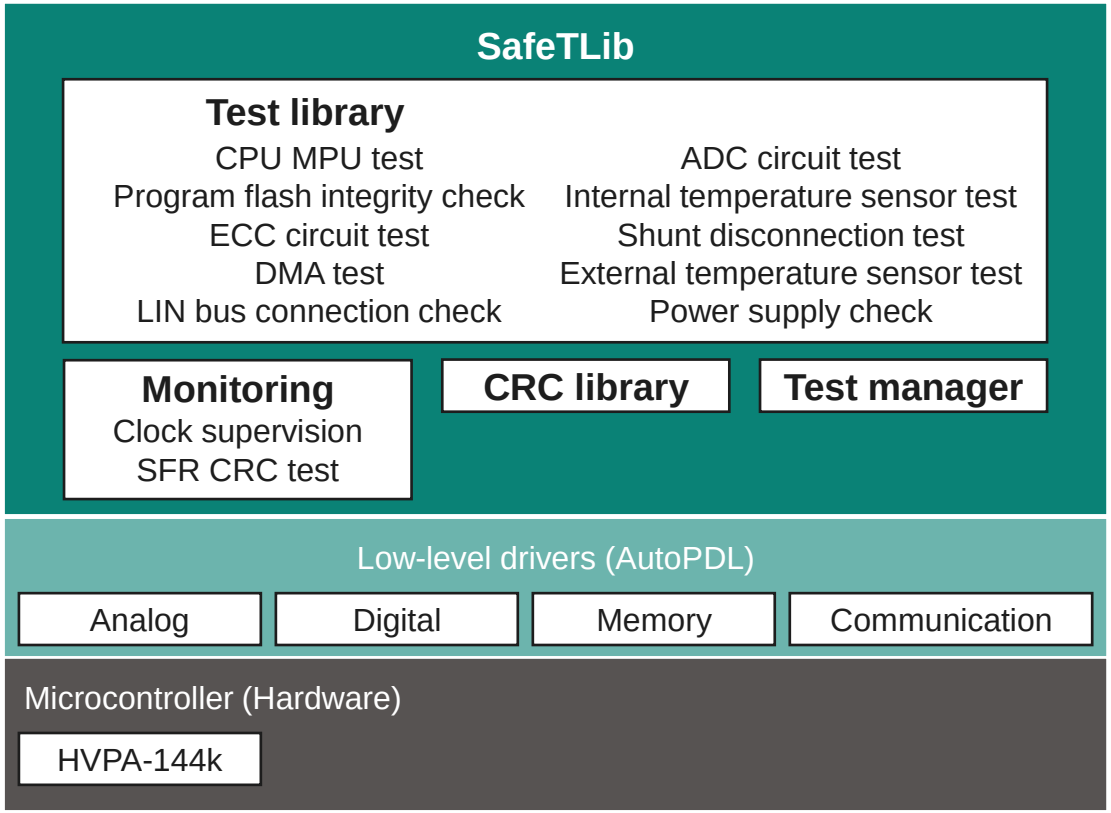

Copyright © Infineon Technologies AG 2024. All rights reserved.

License model

- **Evaluation license**
  - Free of charge, evaluate software for 3 months
- **Project license**
  - License restricted to one control unit (ECU), for one application type (e.g. BMS) at one OEM and restricted to one INFINEON Device
- **Maintenance license**
  - 1Y Maintenance (20% of the project license fee)
  - Receive update/expert support 40hr/fixing defect
- **Company license**
  - 7th Project License + 3Y Maintenance on 7 projects (8th project license onward is **FOC**) for same product family

- **For small volume customers the “volume based license” is offered, customer pays upfront for a cumulated production volume using PDL/middleware library**

Copyright © Infineon Technologies AG 2024. All rights reserved.

Software business model: Global reference model for SW products (including service)

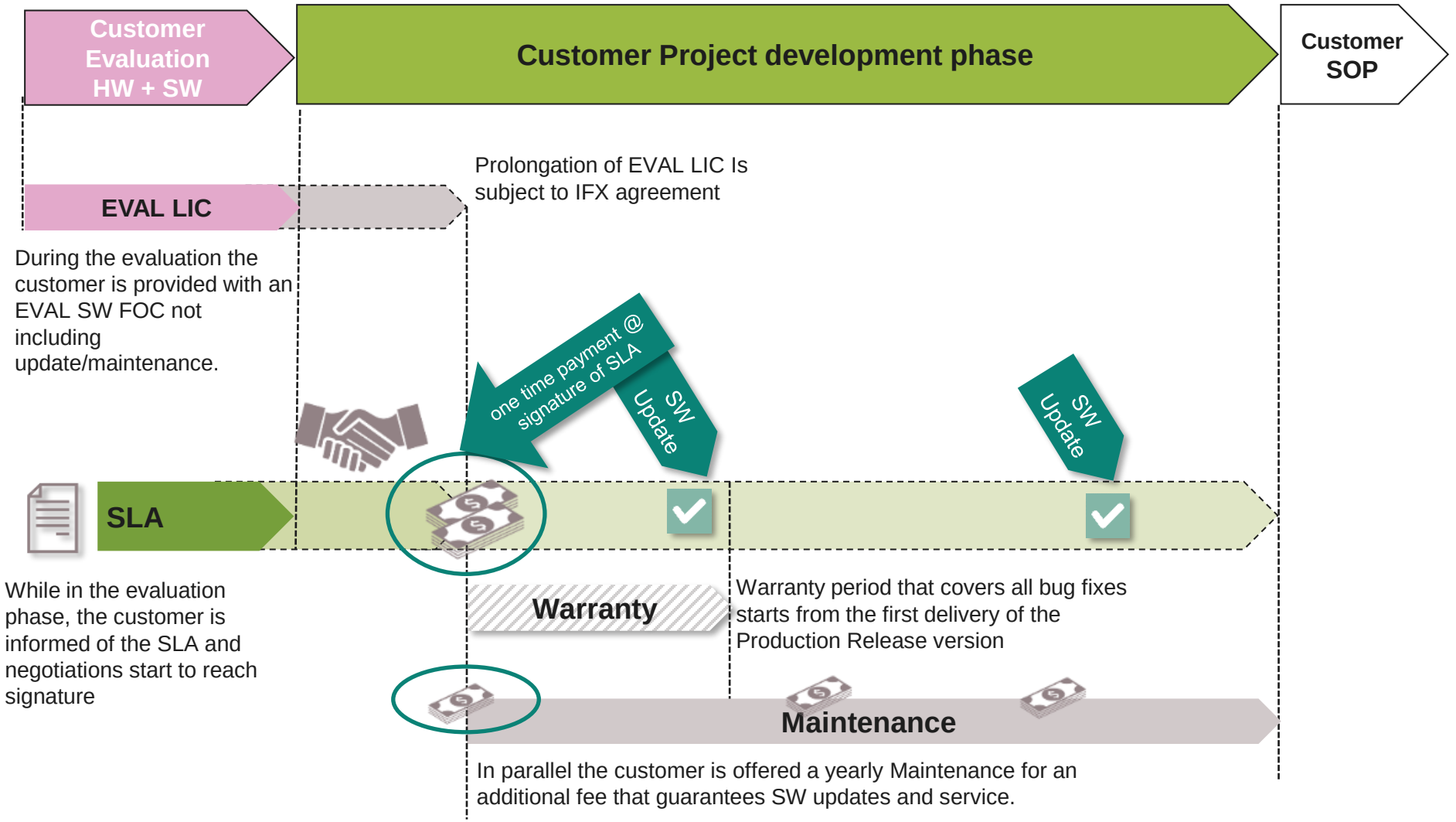

Copyright © Infineon Technologies AG 2024. All rights reserved.

Multiple licenses schemes leading to a buy out: Reference model for SW products (incl. service)

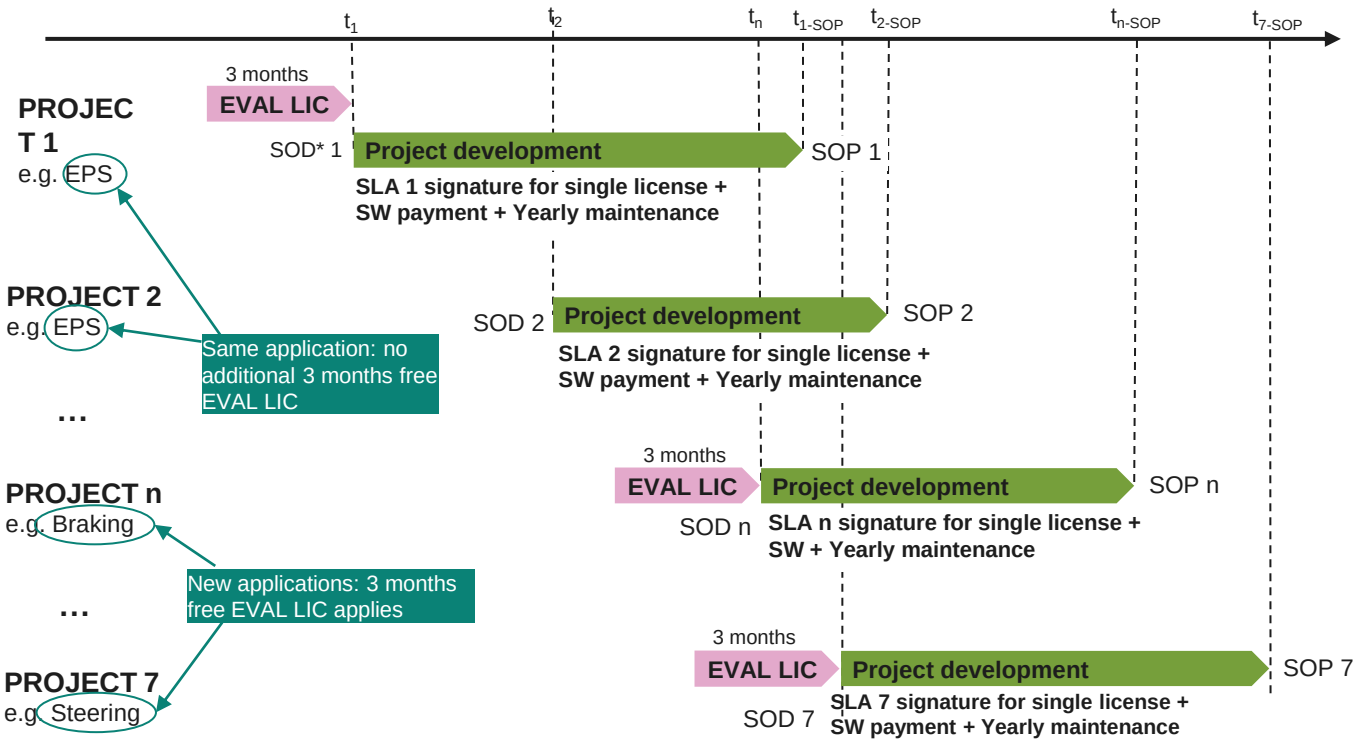

SOD = Start Of Development

Customer qualifies for **corresponding product family Company License** if agreed to 3 years of Maintenance for 7 payed Licenses for same product family

Copyright © Infineon Technologies AG 2024. All rights reserved.

Software update flow

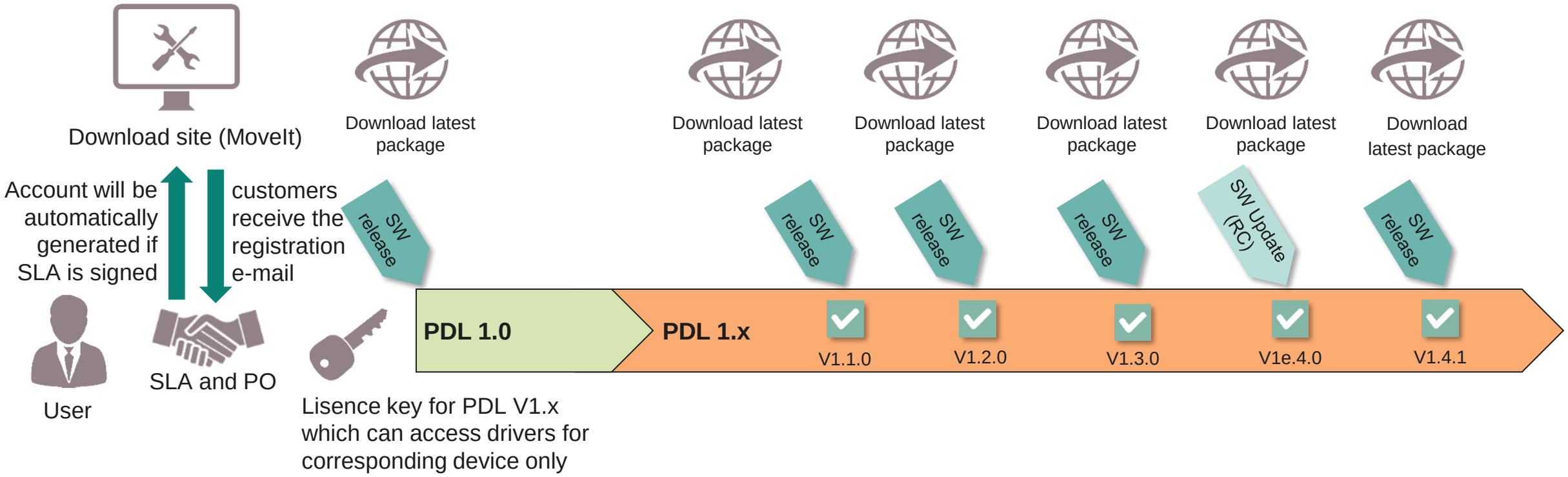

Copyright © Infineon Technologies AG 2024. All rights reserved.

Table of contents

1 PSoC 4 HVPA-144k: Intelligent Battery Sensor 3

2 Software Offering 16

3 **Getting Started** **26**

Copyright © Infineon Technologies AG 2024. All rights reserved.

Getting started: PSoC HVPA Current Sensor Reference Design

Reference Design: CYHVPA-DEMO-001

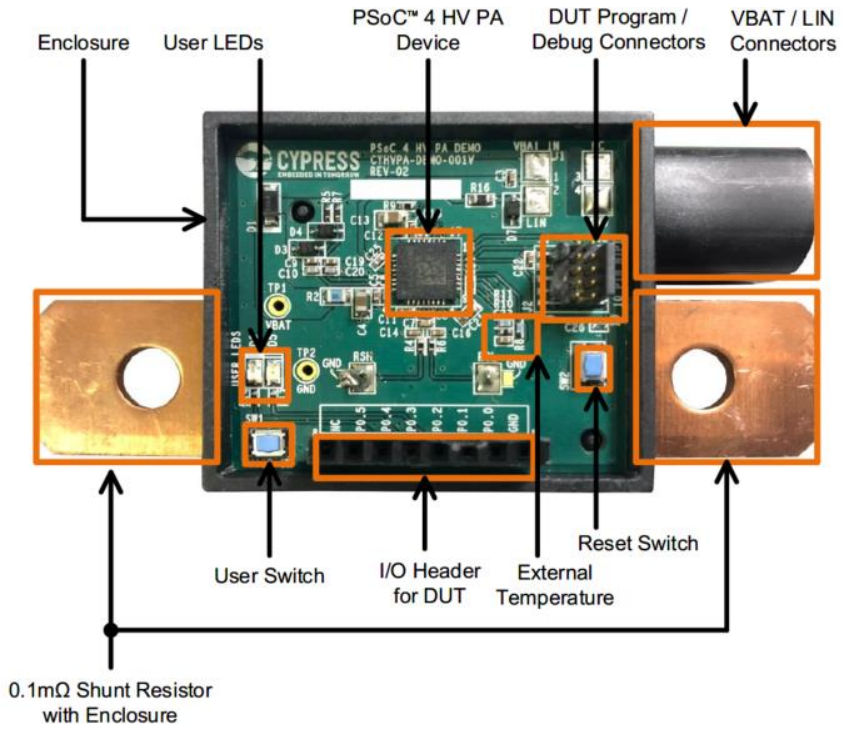

More details on myICP: CYHVPA-DEMO-001

Measure pack current, voltage, temperature and SoC

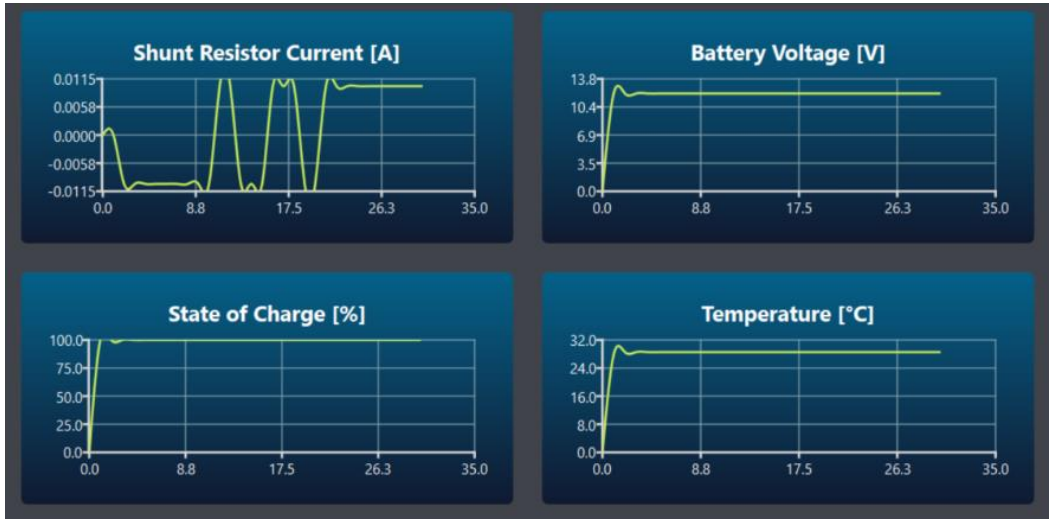

Reference Design Details

- Measure battery pack current with on-board shunt-sensor (0.1mΩ)
- Example code (pre-programmed) with AutoPDL
- Estimate SoC based on coulomb counting
- Interactive GUI tool with PSoC™ HVPA IBS demo software

*NOTE: Battery Voltage is for 12V, that is measured based on internal voltage dividers available in PSoC 4 HVPA-144k

Copyright © Infineon Technologies AG 2024. All rights reserved.

Getting started: PSoC HVPA Evaluation Board & Sample software

Evaluation board: CYHVPA-128K-32-001

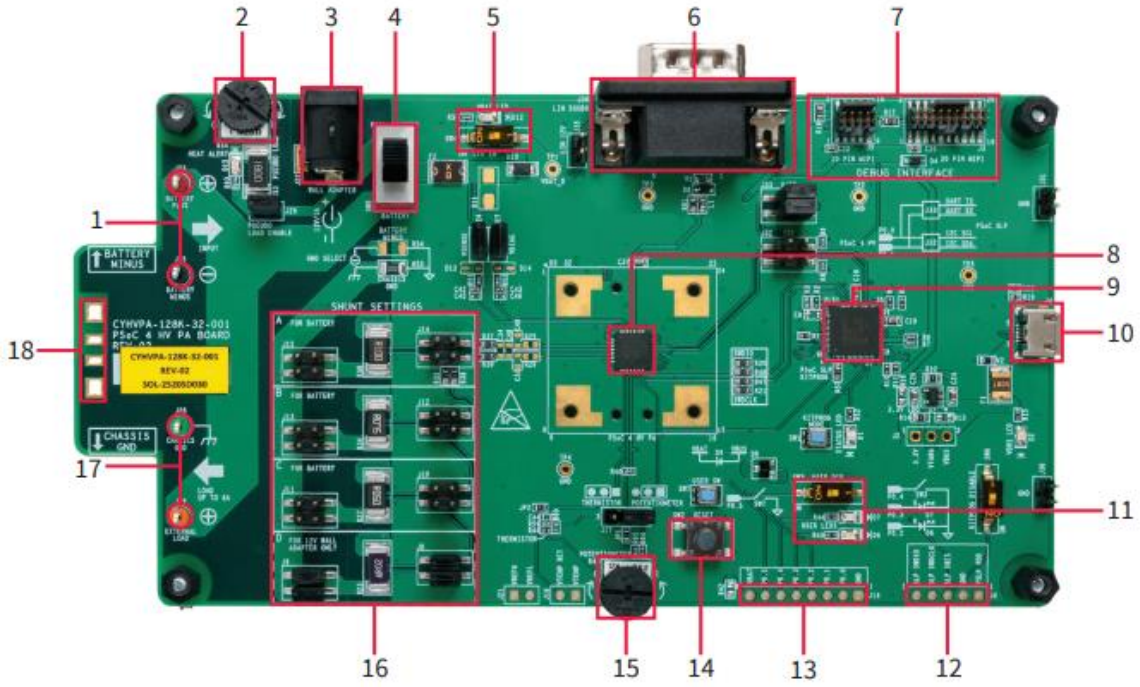

More details on the website at: CYHVPA-128K-32-001

Platform providing developers with the evaluation environment for PSoC 4 HVPA family of products

- Evaluation board with example software code based on AutoPDL

Board Details

1. Battery input connector (J23, J25)
2. Pseudo load (for wall adaptor – R56)
3. 12-V wall adaptor input (J22)
4. Power switch (SW5)
5. VBAT LED and switch (D12, SW4)
6. LIN interface connector (J36)
7. DUT program/debug connector (J3, J5)
8. PSoC™ HV PA device (DUT: CY8C4147LCE-HV413 – U3)
9. PSoC™ 5LP (KitProg3) for programming (CY8C5868LTI-LP039 – U1)
10. Micro-USB connector for programming (J4)
11. User switch and LEDs (SW3, D6, D7)
12. PSoC™ 5LP program connector (J6)
13. I/O header for DUT (J16)
14. Reset switch (SW2)
15. Pseudo temperature sensor (R45)
16. Shunt resistors (100 mΩ / 75 mΩ / 4.02 Ω)
17. Pseudo load connectors (up to 6 A)
18. High-current shunt resistor connectors (100 µΩ /50 µΩ)

Copyright © Infineon Technologies AG 2024. All rights reserved.


Infineon