Statement of Objectives

- Introduce the 2Mb-to-16Mb EXCELON™ F-RAM[1] product family
- Inform customers that they can now design with the industry's most energy-efficient, high-reliability, high-performance nonvolatile memories (NVMs)[2]
- Inform them that they can now design with the industry's first Quad SPI[3] interface F-RAMs

Simple, declarative statement:

- 2Mb-to-16Mb EXCELON™ F-RAM products are the industry's most energy-efficient NVMs, offering high reliability and the performance of parallel interface products with low-pin-count interface options

Non-ToA concepts:

- 2Mb-to-16Mb EXCELON™ F-RAMs: EXCELON™ F-RAM product family with 2Mb, 4Mb, 8Mb, and 16Mb densities (what we sell)

[1] A fast-write, high-endurance, low-energy nonvolatile memory (NVM) that uses ferroelectric technology to store data

[2] A memory that retains data even when it is not powered, usually using charge storage, but sometimes using ferroelectric or magnetic properties

[3] An industry-standard, high-bandwidth, low-pin-count interface that simultaneously uses a four-wire SPI interface to enable faster data transactions

Definition on this page only:
D= Distribution Presentation Only
C= Customer Presentation Only
D+C = Both Distribution and Customer Presentations
I = Internal Use Only



New product introduction:

2Mb-to-16Mb EXCELON™ F-RAM family

Energy-efficient, high-performance, high-reliability NVM

Karthik Rangarajan (RAM)
Q4 2021

Modern systems need energy-efficient, high-performance, high-reliability NVM solutions

D+C

- The market for F-RAM*, one type of NVM, is projected to grow from $251 million in 2015 to $461 million in 2020 at a CAGR of 13%[1]
- 2Mb-to-16Mb F-RAM target market segments:

Medical devices



Neuromodulator

Wearables



Smartwatch

Industrial control and automation



Motor Control

Automotive



Infotainment System

- Systems in these market segments require NVMs to frequently log sensor data and instantly capture critical system data on power loss

* Linked terms are defined in the Glossary in the Appendix

[1] Sources: Web-Feet Research, Semicast, Gartner, internal market research

Design problems engineers face



- **Systems require high-reliability NVMs to log data reliably**
  - → EEPROM page write requires additional capacitors or batteries to capture data on power loss, reducing reliability
  - → EEPROM write endurance limitations reduce system reliability necessitating the use of wear leveling[1]



- **Systems require energy-efficient NVMs to extend battery life**
  - → EEPROM consumes excess battery power for every 10-ms page write operation required to write only one byte
  - → EEPROM consumes excess battery power due to its high active currents and wear leveling processes



- **System designers require high-performance, low-pin-count NVMs to quickly access programs, log data**
  - → Current low-pin-count NVMs lack the write bandwidth of high-speed parallel interfaces due to page write latencies
  - → Parallel NVMs require larger packages and more microcontroller pins



- **Infineon's 2Mb-to-16Mb EXCELON™ F-RAM product family solves all these problems**
  - → Consumes 127x[2] less energy than EEPROM for burst writes
  - → Offers 54-MBps Quad SPI interface in small-footprint SOIC and GQFN package options
  - → Eliminates the need for additional capacitors or batteries to complete a write on power loss
  - → Provides 100 trillion cycles of write endurance vs. just 1 million for EEPROM

Infineon offers the industry's most energy-efficient, high-performance, high-reliability NVMs

[1] A method to prolong EEPROM write endurance that uses an EEPROM with up to 8x excess capacity and a software algorithm to move storage to unused memory addresses before the write endurance limit on an active address is reached

[2] Condition: 4Mb burst write at 5-MHz SPI

F-RAM NVM – Essential for mission-critical data-logging in fail-safe automotive and industrial systems

D+C

ADAS vision system

- Capture real-time data instantly and store data on power-loss
- Ensure sufficient write-cycle endurance to log data for 20 years
- Retain data for > 5 years
- Should be designed with AEC-Q100 qualified memory components

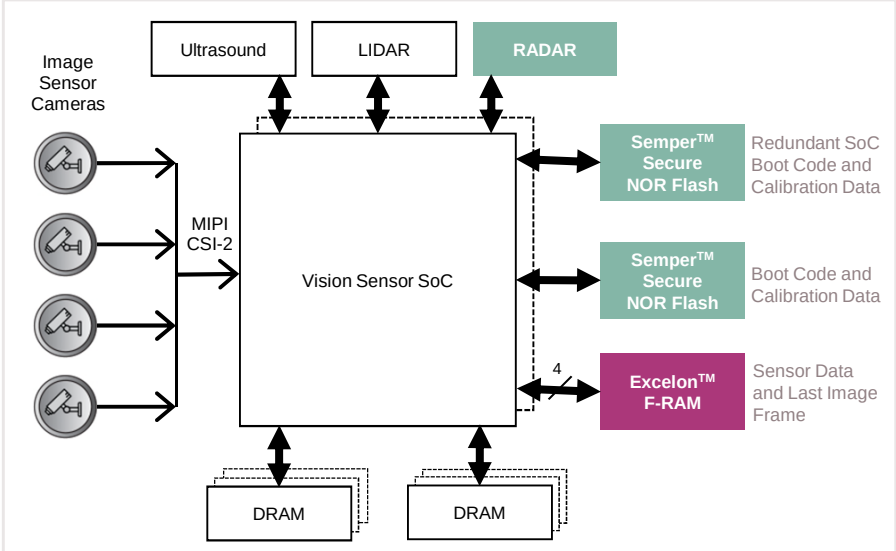

Programmable logic controller

- Capture real-time data instantly and store data on power-loss
- Write data at throughputs equivalent to parallel battery-backed SRAMs
- Need sufficient NVM density and write cycle endurance to log data continuously over a 15-year product lifespan
- Eliminate back-up batteries to reduce cost and increase reliability

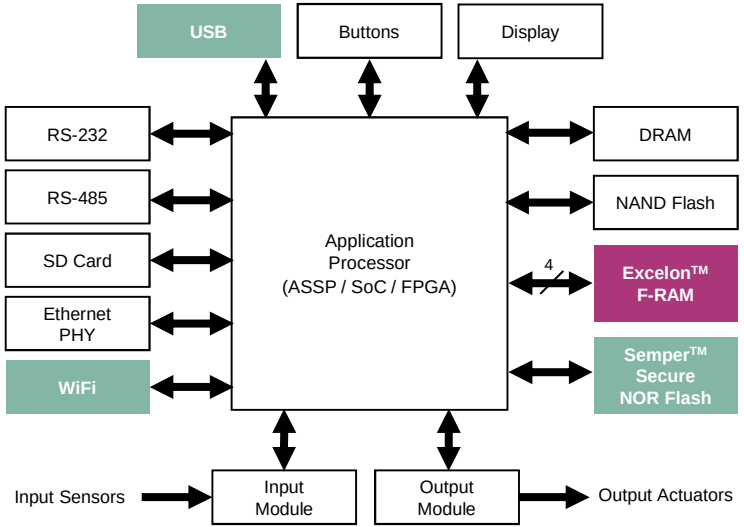

Excelon™ F-RAM Other Infineon Portfolio Products

F-RAM NVM – Growing need for high density
Reliable data-logging in portable and implantable medical devices

D+C

Neuromodulator

- Require lowest energy components to maximize battery life
- Need sufficient NVM density and write cycle endurance to log data continuously over the product's lifetime
- Should be immune to magnetic field effect and radiation
- Accommodate smallest footprint components to deliver small form-factors

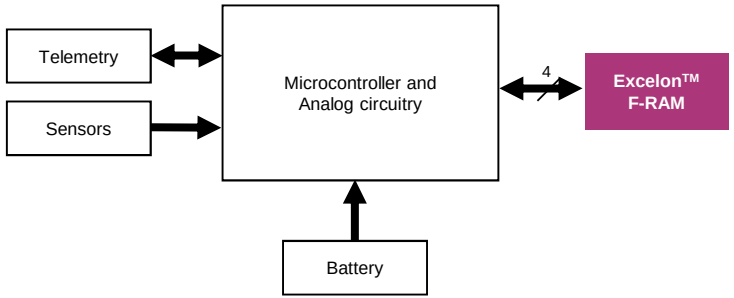

Cardiac Implant

- Require lowest energy components to maximize battery life
- Need sufficient NVM density and write cycle endurance to log data continuously over the product's lifetime
- Should be immune to magnetic field effect and radiation
- Accommodate smallest footprint components to deliver small form-factors

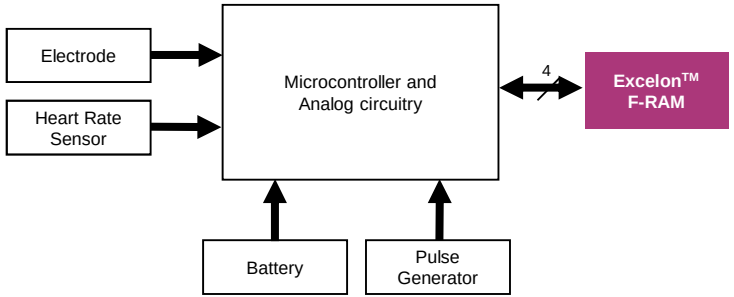

Excelon™ F-RAM Other Infineon Portfolio Products

Introducing EXCELON™ F-RAM – The no-data-loss NVM

HIGH PERFORMANCE

Fast as parallel interface SRAMs

- Low-pin-count Quad SPI interface
- 54MBps throughput at 108-MHz frequency
- NoDelay™ writes

UNMATCHED RELIABILITY

Best-in-class reliability

- 100 trillion read/write cycles of endurance
- 160 years data retention at 50°C
- AEC-Q100 and Functional Safety (ISO 26262) compliant

ENERGY EFFICIENT

Ultra-low-energy

- 200x less energy than EEPROMs
- Inrush current control during power-up
- Low-power modes: Standby, Deep-Power-Down, Hibernate



EXCELON™ F-RAM: Better solution at a lower cost

Simplify a conventional, complex, battery-operated, EEPROM-based design…



2x EEPROM capacity for wear leveling

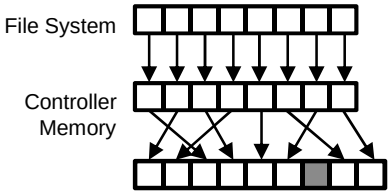

Wear leveling software algorithm to increase EEPROM write endurance

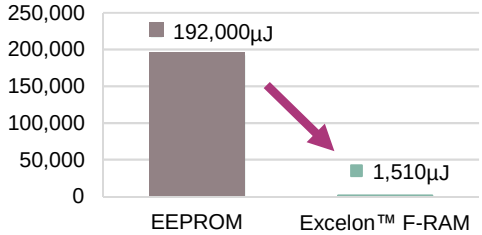

High-write energy consumption[1] compared with Excelon™ F-RAM

By **choosing F-RAM** as your serial NVM solution…

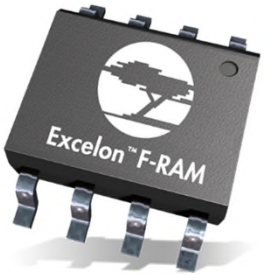

F-RAM **pin-for-pin replacement** for EEPROM SOIC8

To produce **better solutions** for **battery-operated applications** at a **lower cost.**

Medical Devices



Wearables



[1] Conditions: 4-Mb density, maximum current (0.6 mA for F-RAM, 3 mA for EEPROM), burst write at 5-MHz SPI, 2.7 to 3.6 V

EXCELON™ F-RAM vs. competition's solutions

Feature	Excelon™ F-RAM	F-RAM	MRAM	EEPROM	EEPROM
Density range	2Mb–16Mb[1]	4Kb–4Mb	256Kb–4Mb	4Kb–4Mb	1Kb–2Mb
Interface frequency (Maximum)	**54-MHz DDR**	**108-MHz SDR**	**108-MHz SDR**	20-MHz SDR	5-MHz SDR
Write bandwidth (Mbps)[2]	**432**	**432**	**432**	0.197	0.197
Hibernate current[3]	**0.1 µA**	20 µA	15 µA	N/A	N/A
Deep power-down current[3]	**0.75 µA**	N/A	N/A	N/A	N/A
Standby current[3]	2.3 µA	140 µA	90 µA	10 µA	**0.16 µA**
Active write current[4]	**0.6 mA**	2.2 mA	26.9 mA	3 mA	3 mA
Write energy for 4Mb (µJ)[4, 5]	**1,510**	5,537	67,700	192,000	192,000
Product battery life (Days)[6]	**9,549**	2,604	213	6.1	6.1
Write/Program latency	**0 ms**	**0 ms**	**0 ms**	10 ms	10 ms
Endurance (Cycles)	**10^{14}**	10^{13}	**Unlimited**	10^{6}	10^{6}

[1] Current F-RAM portfolio offers a density range of 4Kb to 4Mb
[2] Conditions: 10-ms page write for 2Mb 5-MHz SDR EEPROM
[3] Conditions: 4Mb, typical current, 2.7 to 3.6 V
[4] Conditions: 4Mb density, maximum current, 5-MHz SPI, 2.7 to 3.6 V
[5] Condition: 4Mb burst write at 5-MHz SPI. Example: with a CR2032 battery, Excelon™ F-RAM provides 1,573,551 writes vs. Fujitsu F-RAM's 429,150, MRAM's 35,098 and EEPROM's 12,376
[6] 16-byte samples at a sampling interval of 20-ms with a CR2032 battery

Fit questions

1. Do your customers power their systems with batteries?
2. Do they need a low-power NVM solution?
3. Do they require low in-rush current at start-up?
4. Do they use a Micropower SRAM + battery to implement their current NVM solution?
5. Do they need a high-density NVM solution?
6. Do they need their NVM solution to work reliably under radiation and/or magnetic fields?
7. Do they use wear leveling to increase the endurance of their serial EEPROM solution?
8. Do they want an NVM solution that is compatible with a Quad SPI interface?

2Mb-to-16Mb EXCELON™ F-RAM family

Applications

Medical devices, wearables, industrial control and automation, and automotive

Features

- **EXCELON™ Ultra**
  - 2Mb to 16Mb
  - 54-MHz Double Data Rate (DDR)/108-MHz Single Data Rate (SDR) Quad SPI
  - Industrial temperature range grade “I”: -40 ºC to +85 ºC
- **EXCELON™ Auto**
  - 4Mb to 16Mb Auto “A”, 8Mb to 16Mb Auto “S”, 2Mb to 8Mb Auto “E”
  - 54-MHz Double Data Rate (DDR)/108-MHz Single Data Rate (SDR) Quad SPI
  - 40/50-MHz Serial Peripheral Interface (SPI)
  - Automotive temperature range grade “A”: -40 ºC to +85 ºC
  - Automotive temperature range grade “S”: -40 ºC to +105 ºC
  - Automotive temperature range grade “E”: -40 ºC to +125 ºC
- **EXCELON™ LP**
  - 2Mb to 16Mb
  - 20-MHz SPI (Commercial/Industrial), 40/50-MHz SPI (Industrial)
  - Ultra low (0.75 µA) deep power down current
  - Ultra low (0.1 µA) hibernate current
  - Commercial temperature range grade “C”: 0 °C to +70 °C
  - Industrial temperature range grade “I”: -40 °C to +85 °C
  - Industrial temperature range grade “Q”: -40 ºC to +105 ºC
- **Common features for EXCELON™ Ultra/Auto/LP**
  - Operating voltage ranges: 1.71 V to 1.89 V, 1.80 V to 3.60 V
  - 100-trillion read/write cycle endurance & 100-year data retention

EXCELON™ F-RAM

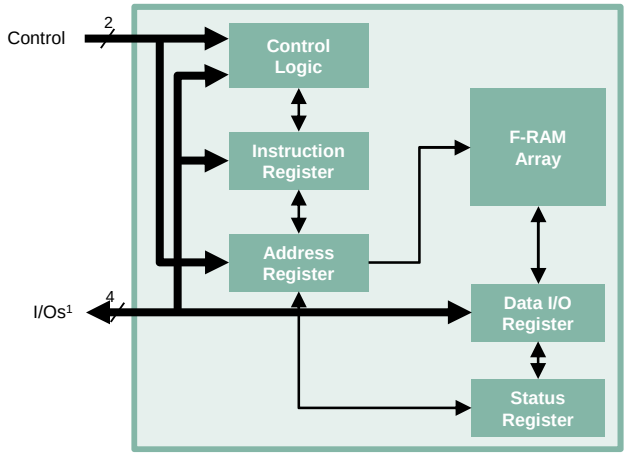

Family Table

Density	Standby Current (Typ.)	Active Current (Typ.)	Packages
2Mb	2.3 µA	2.4 mA	SOIC (8), TDFN (8)
4Mb	2.3 µA	2.4 mA	SOIC (8), GQFN (8)
8Mb	3.5 µA	2.6 mA	SOIC (8), GQFN (8)
16Mb	8.0 µA	2.7 mA	FBGA (24)

[1] Quad SPI has 4 I/Os

F-RAM portfolio

Low power | High endurance

D+C

	LPC[1] F-RAM				Processor Companion	Parallel F-RAM	
512Kb–16Mb	**FM25V20A** **2Mb**; 2.0–3.6 V 40-MHz SPI; Ind[2]	**CY15B104Q** **4Mb;** 2.0–3.6 V 40-MHz SPI; Ind	● **EXCELON™ [3] F-RAM** **Up to 16Mb** **1.8 V, 108-MHz QSPI[4]**			**FM22L16/LD16** **4Mb**; 2.7–3.6 V 55 ns; x8; Ind	
	FM25V10/VN10 **1Mb**; 2.0–3.6 V 40-MHz SPI; Ind, Auto A[5]	**CY15B102Q** **2Mb;** 2.0–3.6 V 25-MHz SPI; Auto E[6]	**FM24V10/VN10** **1Mb**; 2.0–3.6 V 3.4-MHz I²C; Ind, Auto A			**FM28V102A** **1Mb;** 2.0–3.6 V 60 ns; x16; Ind	**FM28V202A** **2Mb;** 2.0–3.6 V 60 ns; x16; Ind
	FM25V05 **512Kb**; 2.0–3.6 V 40-MHz SPI; Ind, Auto A		**FM24V05** **512Kb**; 2.0–3.6 V 3.4-MHz I²C; Ind, Auto A			**CY15B101N** **1Mb;** 2.0–3.6 V 60 ns; x16; Auto A, E	**CY15B102N** **2Mb;** 2.0–3.6 V 60 ns; x16; Auto A, E
4–256Kb	**FM25V02A/W256** **256Kb**; V02A: 2.0–3.6 V W256: 2.7–5.5 V 40-MHz SPI; Ind	**CY15B256Q** **256Kb**; 3.3V 33/40-MHz SPI; Auto A, E	**FM24V02A/W256** **256Kb**; V02A: 2.0–3.6 V W256: 2.7–5.5 V 3.4-MHz I²C; Ind	**CY15B256J** **256Kb**; 2.0–3.6 V 3.4-MHz I²C; Auto A, E	**FM33256** **256Kb**; 3.3 V; 16-MHz SPI Ind; RTC[7]; Power Fail Watchdog; Counter	**FM28V020** **256Kb**; 2.0–3.6 V 70 ns; x8; Ind	**FM18W08** **256Kb**; 2.7–5.5 V 70 ns; x8; Ind
	FM25V01A **128Kb**; 2.0–3.6 V 40-MHz SPI; Ind	**CY15B128Q** **128Kb**; 3.3V 33/40-MHz SPI; Auto A, E	**FM24V01A** **128Kb**; 2.0–3.6 V 3.4-MHz I²C; Ind	**CY15B128J** **128Kb**; 2.0–3.6 V 3.4-MHz I²C; Auto A, E	**FM31256/31(L)278** **256Kb**; 3.3, 5.0 V; 1-MHz I²C; Ind; RTC; Power Fail; Watchdog; Counter	**FM1808B** **256Kb**; 5.0 V 70 ns; x8; Ind	**FM16W08** **64Kb**; 2.7–5.5 V 70 ns; x8; Ind
	FM25640B/CL64B **64Kb**; 3.3, 5.0 V 20-MHz SPI; Ind	**CY15B064Q/E064Q** **64Kb**; 3.3, 5.0 V 16/20-MHz SPI; Auto A, E	**FM24C64/CL64** **64Kb**; 3.3, 5.0 V 1-MHz I²C; Ind	**CY15B064J/E064J** **64Kb**; 3.3, 5.0 V 1-MHz I²C; Auto A, E	**FM3164/31(L)276** **64Kb**; 3.3, 5.0 V; 1-MHz I²C; Ind; RTC; Power Fail; Watchdog; Counter		
	FM25C160/L16 **16Kb**; 3.3, 5.0 V 20-MHz SPI; Ind	**CY15B016Q/E016Q** **16Kb**; 3.3, 5.0 V 16/20-MHz SPI; Auto A, E	**FM24C16/CL16** **16Kb**; 3.3, 5.0 V 1-MHz I²C; Ind	**CY15B016J/E016J** **16Kb**; 3.3, 5.0 V 1-MHz I²C; Auto A, E			
	FM25040/L04 **4Kb**; 3.3, 5.0 V 20-MHz SPI; Ind	**CY15B004Q/E004Q** **4Kb**; 3.3, 5.0 V 16/20-MHz SPI; Auto A, E	**FM24C04/CL04** **4Kb**; 3.3, 5.0 V 1-MHz I²C; Ind	**CY15B004J/E004J** **4Kb**; 3.3, 5.0 V 1-MHz I²C; Auto A, E			

Concept | Development | Sampling | Production | CY Schedule

Industrial — ES QQYY

Automotive — MP QQYY

● This presentation

[1] Low-pin-count
[2] Industrial grade -40 °C to +85 °C
[3] Ultra-low-energy
[4] Quad serial peripheral interface
[5] AEC-Q100 -40 °C to +85 °C
[6] AEC-Q100 -40 °C to +125 °C

EXCELON™ F-RAM portfolio

Ultra low power | High speed | High endurance

D+C

	EXCELON™ Auto		EXCELON™ Ultra		EXCELON™ LP	
2Mb–16Mb	**CY15B116QSN** Q122 **16Mb;** 1.8–3.6 V 24-ball FBGA 108-MHz QSPI[1] Auto S[2]	**CY15V116QSN** Q122 **16Mb;** 1.71–1.89 V 24-ball FBGA 108-MHz QSPI Auto S	**CY15B116QSN** Q122 **16Mb**; 1.8–3.6 V 24-ball FBGA 108-MHz QSPI, Ind[3]	**CY15V116QSN** Q122 **16Mb**; 1.71–1.89 V 24-ball FBGA 108-MHz QSPI, Ind	**CY15B116QI/N** Q122 **16Mb**; 1.8–3.6 V 24-ball FBGA 20/40-MHz SPI, Comm[4], Ind	**CY15V116QI/N** Q122 **16Mb**; 1.71–1.89 V 24-ball FBGA 20/40-MHz SPI, Comm, Ind
	CY15B116QN Q122 **16Mb;** 1.8–3.6 V 24-ball FBGA 40-MHz SPI; Auto A[5]	**CY15V116QN** Q122 **16Mb;** 1.71–1.89 V 24-ball FBGA 40-MHz SPI; Auto A				
	CY15B108QSN Q122 **8Mb;** 1.8–3.6 V 24-ball FBGA 108-MHz QSPI; Auto S	**CY15V108QSN** Q122 **8Mb;** 1.71–1.89 V 24-ball FBGA 108-MHz QSPI; Auto S	**CY15B108QSN** Q122 **8Mb**; 1.8–3.6 V 24-ball FBGA 108-MHz QSPI, Ind	**CY15V108QSN** Q122 **8Mb**; 1.71–1.89 V 24-ball FBGA 108-MHz QSPI, Ind	**CY15B108QN** Q122 **8Mb**; 1.8–3.6 V 24-ball FBGA 50-MHz SPI, Ind, Ind Q[7]	**CY15V108QN** Q122 **8Mb**; 1.71–1.89 V 24-ball FBGA 50-MHz SPI, Ind, Ind Q
	CY15B108QN **8Mb;** 1.8–3.6 V 8-pin SOIC 50-MHz SPI; Auto E[6]	**CY15V108QN** **8Mb;** 1.71–1.89 V 8-pin SOIC 50-MHz SPI; Auto E	**CY15B108QSN** **8Mb**; 1.8–3.6 V 8-pin GQFN, SOIC 108-MHz QSPI, Ind	**CY15V108QSN** **8Mb**; 1.71–1.89 V 8-pin GQFN, SOIC 108-MHz QSPI, Ind	**CY15B108QI/N** **8Mb**; 1.8–3.6 V 8-pin GQFN 20/40-MHz SPI, Comm, Ind	**CY15V108QI/N** **8Mb**; 1.71–1.89 V 8-pin GQFN 20/40-MHz SPI, Comm, Ind
	CY15B104QN **4Mb;** 1.8–3.6 V 8-pin SOIC 40-MHz SPI; Auto E	**CY15V104QN** **4Mb;** 1.71–1.89 V 8-pin SOIC 50-MHz SPI; Auto E				
	CY15B104QN **4Mb;** 1.8–3.6 V 8-pin SOIC 50-MHz SPI; Auto A	**CY15V104QN** **4Mb;** 1.71–1.89 V 8-pin SOIC 50-MHz SPI; Auto A	**CY15B104QSN** **4Mb**; 1.8–3.6 V 8-pin GQFN, SOIC 108-MHz QSPI, Ind	**CY15V104QSN** **4Mb**; 1.71–1.89 V 8-pin GQFN, SOIC 108-MHz QSPI, Ind	**CY15B104QI/N** **4Mb**; 1.8–3.6 V 8-pin GQFN, SOIC 20/50-MHz SPI, Comm, Ind	**CY15V104QI/N** **4Mb**; 1.71–1.89 V 8-pin GQFN, SOIC 20/50-MHz SPI, Comm, Ind
	CY15B102QN **2Mb;** 1.8–3.6 V 8-pin SOIC 50-MHz SPI; Auto E	**CY15V102QN** **2Mb;** 1.71–1.89 V 8-pin SOIC 50-MHz SPI; Auto E	**CY15B102QSN** **2Mb**; 1.8–3.6 V 8-pin SOIC 108-MHz QSPI, Ind	**CY15V102QSN** **2Mb**; 1.71–1.89 V 8-pin SOIC 108-MHz QSPI, Ind	**CY15B102QN** **2Mb**; 1.8–3.6 V 8-pin DFN, SOIC 50-MHz SPI, Ind	**CY15V102QN** **2Mb**; 1.71–1.89 V 8-pin DFN, SOIC 50-MHz SPI, Ind

	Concept	Development	Sampling	Production	CY Schedule
Industrial					ES QQYY
Automotive					MP QQYY

[1] Quad serial peripheral interface
[2] AEC-Q100 -40 °C to +105 °C
[3] Industrial grade -40 °C to +85 °C [4] Commercial grade 0 °C to +70 °C
[5] AEC-Q100 -40 °C to +85 °C
[6] AEC-Q100 -40 °C to +125 °C
[7] Industrial Q grade -40 °C to +105 °C

What’s in it for you?

1. An easy-to-design solution that requires minimal technical support
2. Sustained revenue from long product life cycles
3. Easy-to-replicate success with customers in your region
4. Protect your win with the Cypress Global Registration Program
5. Take advantage of our demand creation program with 18% to 25% margins

Getting started with EXCELON™ F-RAM

1. Download our application note: *SPI Guide for F-RAM* (AN304)
2. Register to access online support
3. Contact Sales to request a datasheet

Medical devices



Neuromodulator

Wearables



Smartwatch

Industrial control and automation



Motor Control

Automotive



Infotainment System

Getting started with EXCELON™ F-RAM

1. Identify accounts for joint visits
2. Show them the Nonvolatile RAM Roadmap
3. Contact Sales to request a datasheet

Medical devices



Neuromodulator

Wearables



Smartwatch

Industrial control and automation



Motor Control

Automotive



Infotainment System

EXCELON™ F-RAM resources

D+C

Webpage	› EXCELON™ F-RAM Webpage https://www.cypress.com/products/excelon-fram
Product Overview (Webpage)	› Brochure: EXCELON™ Ultra F-RAM Memory › Brochure: EXCELON™ Auto F-RAM Memory › Brochure: EXCELON™ LP F-RAM Memory
Application Notes	› Designing with the Quad SPI (QSPI) F-RAM › Designing with EXCELON™ LP SPI F-RAM low-power modes › SPI Guide for F-RAM
Datasheets	› 2Mb EXCELON™ Auto F-RAM with Automotive-E Temperature Datasheet › 4Mb EXCELON™ Ultra F-RAM with Quad SPI interface datasheet › 8Mb EXCELON™ LP F-RAM with inrush current control datasheet
Solution Videos	› High-speed nonvolatile data-logging for industry 4.0 › No-Data-Loss Automotive EDR with EXCELON™ F-RAM › EXCELON™ LP for portable & implantable medical devices
Kits & Development Boards	› EXCELON™ F-RAM development kit › PSoC™ 6 WiFi-Bluetooth pioneer kit with EXCELON™ Ultra F-RAM on-board › Access software and tools including example projects

Summary



Embedded systems require high-reliability NVMs to log data reliably in an energy-efficient manner

EXCELON™ F-RAM is the only NVM that offers high-reliability and high-performance with ultra-low-power consumption

EXCELON™ offers high-density, high-performance, low-pin-count interfaces to quickly access both program and log data

More Information: www.cypress.com/excelon-fram

Appendix

Infineon is the NVM market leader

Infineon offers the largest portfolio of serial and parallel NVRAM products

- F-RAM, the industry's most energy-efficient serial and parallel NVRAMs
- nvSRAM, the industry's fastest parallel NVRAMs

Infineon offers the largest portfolio of the industry's most energy-efficient and reliable F-RAM products

- F-RAM consumes 30% of the power of the most advanced EEPROM and offers 100 million times the write endurance
- F-RAM densities range from 4Kb to 4Mb, with supply voltages from 2.0 V to 5.5 V
- SPI and I^2C serial F-RAM products come in SOIC8, GQFN8, DFN8, and EIAJ packages
- F-RAM products offer optional real-time clocks and event counters

Infineon offers the largest portfolio of the industry's fastest parallel nvSRAM products

- 25-ns access times are available with unlimited write endurance
- Densities range from 64Kb to 16Mb with 3.0-V and 5.0-V supply voltages and 1.8-V I/O voltage
- Asynchronous x8, x16, x32 SRAM parallel interfaces come in FBGA, SOIC, SSOP, and TSOP packages
- Integrated real-time clocks are also available on nvSRAM products

Highlights:

- Was the first to produce F-RAM and nvSRAM products
- Has shipped more than 1 billion NVRAM units
- Provides products that meet the most rigorous automotive and military standards
- Assures long-term supply of F-RAM and nvSRAM products

2Mb-to-16Mb EXCELON™ F-RAM family

Applications

Medical devices, wearables, industrial control and automation, and automotive

Features

- **EXCELON™ Ultra**
  - 2Mb to 16Mb
  - 54-MHz Double Data Rate (DDR)/108-MHz Single Data Rate (SDR) Quad SPI
  - Industrial temperature range grade “I”: -40 ºC to +85 ºC
- **EXCELON™ Auto**
  - 4Mb to 16Mb Auto “A”, 8Mb to 16Mb Auto “S”, 2Mb to 8Mb Auto “E”
  - 54-MHz Double Data Rate (DDR)/108-MHz Single Data Rate (SDR) Quad SPI
  - 40/50-MHz Serial Peripheral Interface (SPI)
  - Automotive temperature range grade “A”: -40 ºC to +85 ºC
  - Automotive temperature range grade “S”: -40 ºC to +105 ºC
  - Automotive temperature range grade “E”: -40 ºC to +125 ºC
- **EXCELON™ LP**
  - 2Mb to 16Mb
  - 20-MHz SPI (Commercial/Industrial), 40/50-MHz SPI (Industrial)
  - Ultra low (0.75 µA) deep power down current
  - Ultra low (0.1 µA) hibernate current
  - Commercial temperature range grade “C”: 0 °C to +70 °C
  - Industrial temperature range grade “I”: -40 °C to +85 °C
  - Industrial temperature range grade “Q”: -40 ºC to +105 ºC
- **Common features for EXCELON™ Ultra/Auto/LP**
  - Operating voltage ranges: 1.71 V to 1.89 V, 1.80 V to 3.60 V
  - 100-trillion read/write cycle endurance & 100-year data retention

Collateral

Datasheets: EXCELON™ F-RAM

EXCELON™ F-RAM

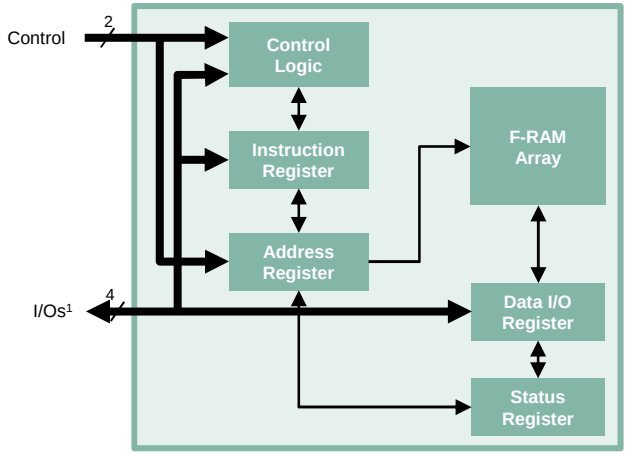

Family Table

Density	Standby Current (Typ.)	Active Current (Typ.)	Packages
2Mb	2.3 µA	2.4 mA	SOIC (8), TDFN (8)
4Mb	2.3 µA	2.4 mA	SOIC (8), GQFN (8)
8Mb	3.5 µA	2.6 mA	SOIC (8), GQFN (8)
16Mb	8.0 µA	2.7 mA	FBGA (24)

Availability

Sampling: Now (16Mb Ultra/LP)
Production: Now (2Mb Auto E, 4Mb Auto A/Ultra/LP & 8Mb LP , 2Mb Ind Ultra/LP), Q122 (8Mb Ultra/Auto S, 16Mb)

[1] Quad SPI has 4 I/Os

EXCELON™ F-RAM roadmap

D+C

Product Family	Density	(Prod) [EOL]	2020 Q1	2020 Q2	2020 Q3	2020 Q4	2021 Q1	2021 Q2	2021 Q3	2021 Q4	2022 Q1	2022 Q2	2022 Q3	2022 Q4	2023 Q1	2023 Q2	2023 Q3	2023 Q4	2024 Q1	2024 Q2	2024 Q3	2024 Q4	2025 Q1	2025 Q2	2025 Q3	2025 Q4	2026 Q1	2026 Q2	2026 Q3	2026 Q4
EXCELON™ Ultra F-RAM with serial Quad SPI interface	2Mb		Samples	Samples	Samples	Samples	Production	Production	Production	Production	Production	Production	Production	Production	Production	Production	Production	Production	Production	Production	Production	Production	Production	Production	Production	Production	Production	Production	Production	Production
	4Mb		Production	Production	Production	Production	Production	Production	Production	Production	Production	Production	Production	Production	Production	Production	Production	Production	Production	Production	Production	Production	Production	Production	Production	Production	Production	Production	Production	Production
	8Mb	(Q122)					Samples	Samples	Samples	Samples	Production	Production	Production	Production	Production	Production	Production	Production	Production	Production	Production	Production	Production	Production	Production	Production	Production	Production	Production	Production
	16Mb	(Q122)					Samples	Samples	Samples	Samples	Production	Production	Production	Production	Production	Production	Production	Production	Production	Production	Production	Production	Production	Production	Production	Production	Production	Production	Production	Production
EXCELON™ Auto F-RAM with serial SPI and Quad SPI interface AEC-Q100 qualified	2Mb		Production	Production	Production	Production	Production	Production	Production	Production	Production	Production	Production	Production	Production	Production	Production	Production	Production	Production	Production	Production	Production	Production	Production	Production	Production	Production	Production	Production
	4Mb		Production	Production	Production	Production	Production	Production	Production	Production	Production	Production	Production	Production	Production	Production	Production	Production	Production	Production	Production	Production	Production	Production	Production	Production	Production	Production	Production	Production
	8Mb	(Q122)					Samples	Samples	Samples	Samples	Production	Production	Production	Production	Production	Production	Production	Production	Production	Production	Production	Production	Production	Production	Production	Production	Production	Production	Production	Production
	16Mb	(Q122)					Samples	Samples	Samples	Samples	Production	Production	Production	Production	Production	Production	Production	Production	Production	Production	Production	Production	Production	Production	Production	Production	Production	Production	Production	Production
EXCELON™ LP F-RAM with serial SPI interface Inrush[2] control	2Mb		Samples	Samples	Samples	Samples	Production	Production	Production	Production	Production	Production	Production	Production	Production	Production	Production	Production	Production	Production	Production	Production	Production	Production	Production	Production	Production	Production	Production	EOL
	4Mb		Production	Production	Production	Production	Production	Production	Production	Production	Production	Production	Production	Production	Production	Production	Production	Production	Production	Production	Production	Production	Production	Production	Production	Production	Production	Production	Production	Production
	8Mb		Production	Production	Production	Production	Production	Production	Production	Production	Production	Production	Production	Production	Production	Production	Production	Production	Production	Production	Production	Production	Production	Production	Production	Production	Production	Production	Production	Production
	16Mb	(Q122)					Samples	Samples	Samples	Samples	Production	Production	Production	Production	Production	Production	Production	Production	Production	Production	Production	Production	Production	Production	Production	Production	Production	Production	Production	Production

[2] Switch-on surge current

Concept | Samples | Production | EOL

Glossary

- **Page**
  A physical block of memory locations with consecutive addresses (up to 256 bytes per page in an EEPROM). This is the minimum number of bytes that must be written even for a single EEPROM byte-write operation
- **Nonvolatile memory (NVM)**
  A memory that retains data even when it is not powered, usually using charge storage, but sometimes using ferroelectric or magnetic properties
- **Electrically erasable programmable read-only memory (EEPROM)**
  An NVM that typically uses floating-gate[1] technology in a page-only architecture that incurs full-page latency f**random access memory** or every write operation
- **Ferroelectric (F-RAM)**
  A fast-write, high-endurance, low-energy NVM that uses ferroelectric technology to store data
- **Magnetoresistive random access memory (MRAM)**
  An NVM that uses magnetoresistive cells to retain data on power loss
- **Write endurance**
  The number of times an NVM cell can be rewritten before it wears out

NVM Hierarchy

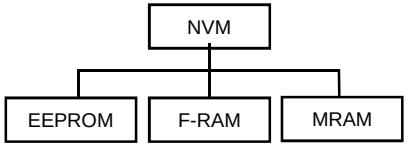

EEPROM vs. F-RAM Memory Architectures

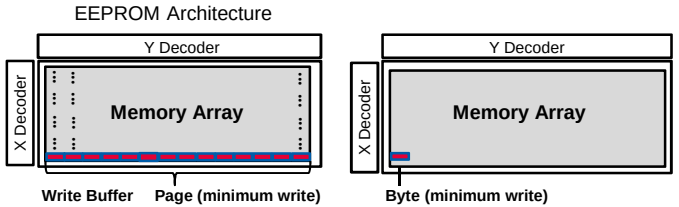

[1] An NVM technology based on a MOS transistor with two gates, a top control gate, and an isolated (floating) gate, which serves as the charge storage site that alters threshold voltage. A control gate is an external gate of an NVM transistor that is biased in order to add or remove electrons from a charge storage site.

Glossary

- **Serial peripheral interface (SPI)**
  An industry-standard, low-pin-count interface used in embedded systems that enables synchronous data exchange (1 bit per cycle) between a master and slave device(s)
- **Quad serial peripheral interface (Quad SPI)**
  An industry-standard, high-bandwidth, low-pin-count interface that simultaneously uses a four-signal SPI interface to enable faster data transactions
- **Double data rate (DDR)**
  A mode of data transfer in which data is transferred twice per clock cycle
- **Wearables**
  Compact electronic devices, such as watches or fitness monitors, used to collect, process, display, and transmit sensor data

EXCELON ™ F-RAM MPN decoder

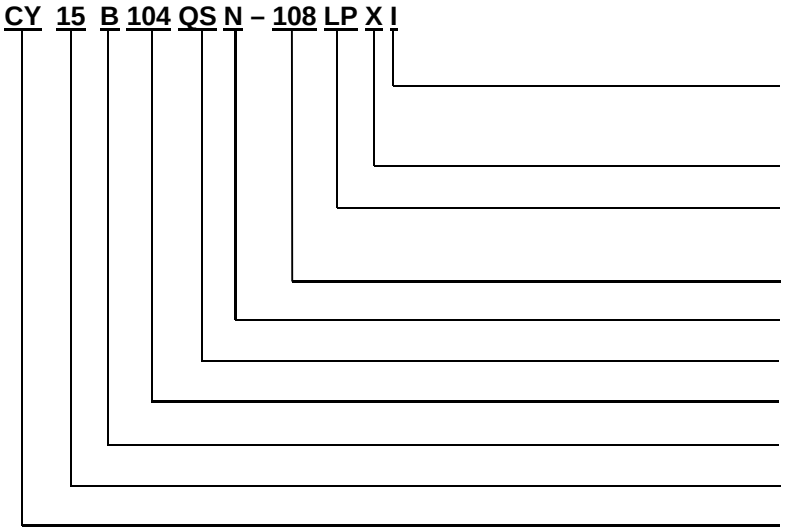

Temperature Range:	I = Industrial, C= Commercial, A = Automotive Grade 3, S = Automotive Grade 2, E = Automotive Grade 1
Pb Content:	X = Pb-free
Package:	S = 8-pin SOIC, LP = 8-pin GQFN, LH = 8-pin TDFN, BK = 24-ball FBGA, WAF = Wafers
Frequency:	20 = 20 MHz, 40 = 40 MHz, 50 = 50 MHz, 108 = 108 MHz
Inrush Current Option:	I = Inrush Controlled, N = Non-Inrush Controlled
Interface:	Q = SPI, QS = Quad SPI
Density:	102 = 2Mb, 104 = 4Mb, 108 = 8Mb, 116 = 16Mb
Voltage:	V = 1.71 to 1.89 V, B = 1.80 to 3.60 V
Marketing Code:	15 = F-RAM
Company ID:	CY = Cypress (An Infineon Technologies Company)

EXCELON™ Ultra F-RAM product selector guide

Part Number	Density	Interface	Frequency	Min. Supply Voltage	Max. Supply Voltage	Temp	Package	ES	Production
CY15B102QSN-108SXI	2Mb	Quad SPI	108 MHz	1.80 V	3.60 V	-40 °C to +85 °C	8-SOIC	-	Now
CY15V102QSN-108SXI	2Mb	Quad SPI	108 MHz	1.71 V	1.89 V	-40 °C to +85 °C	8-SOIC	-	Now
CY15B104QSN-108SXI	4Mb	Quad SPI	108 MHz	1.80 V	3.60 V	-40 °C to +85 °C	8-SOIC	-	Now
CY15V104QSN-108SXI	4Mb	Quad SPI	108 MHz	1.71 V	1.89 V	-40 °C to +85 °C	8-SOIC	-	Now
CY15B104QSN-108LPXI	4Mb	Quad SPI	108 MHz	1.80 V	3.60 V	-40 °C to +85 °C	8-GQFN	-	Now
CY15V104QSN-108LPXI	4Mb	Quad SPI	108 MHz	1.71 V	1.89 V	-40 °C to +85 °C	8-GQFN	-	Now
CY15B108QSN-108BKXI	8Mb	Quad SPI	108 MHz	1.80 V	3.60 V	-40 °C to +85 °C	24-FBGA	Now	Feb ‘22
CY15V108QSN-108BKXI	8Mb	Quad SPI	108 MHz	1.71 V	1.89 V	-40 °C to +85 °C	24-FBGA	Now	Feb ‘22
CY15B116QSN-108BKXI	16Mb	Quad SPI	108 MHz	1.80 V	3.60 V	-40 °C to +85 °C	24-FBGA	Now	Feb ‘22
CY15V116QSN-108BKXI	16Mb	Quad SPI	108 MHz	1.71 V	1.89 V	-40 °C to +85 °C	24-FBGA	Now	Feb ‘22

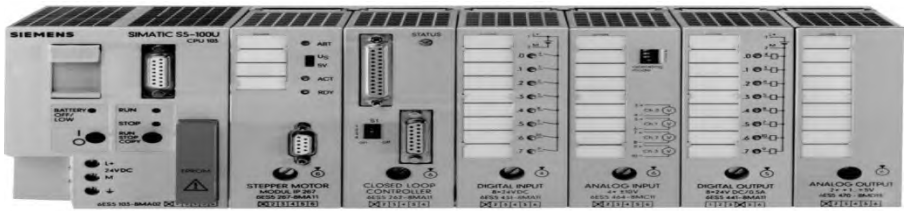

Programmable Logic Controller



Motor Control

EXCELON™ Auto F-RAM product selector guide

D+C

Part Number	Density	Interface	Frequency	Min. Supply Voltage	Max. Supply Voltage	Temp	Package	ES	Production
CY15B102QN-50SXE	2Mb	SPI	50 MHz	1.80 V	3.60 V	-40 °C to +125 °C	8-SOIC	-	Now
CY15V102QN-50SXE	2Mb	SPI	50 MHz	1.71 V	1.89 V	-40 °C to +125 °C	8-SOIC	-	Now
CY15B104QN-50SXA	4Mb	SPI	50 MHz	1.80 V	3.60 V	-40 °C to +85 °C	8-SOIC	-	Now
CY15B108QSN-108BKXS	8Mb	Quad SPI	108 MHz	1.80 V	3.60 V	-40 °C to +105 °C	24-FBGA	Now	Mar ‘22
CY15V108QSN-108BKXS	8Mb	Quad SPI	108 MHz	1.71 V	1.89 V	-40 °C to +105 °C	24-FBGA	Now	Mar ‘22
CY15B116QN-40BKXA	16Mb	SPI	40 MHz	1.80 V	3.60 V	-40 °C to +85 °C	24-FBGA	Now	Mar ‘22
CY15V116QN-40BKXA	16Mb	SPI	40 MHz	1.71 V	1.89 V	-40 °C to +85 °C	24-FBGA	Now	Mar ‘22
CY15B116QSN-108BKXS	16Mb	Quad SPI	108 MHz	1.80 V	3.60 V	-40 °C to +105 °C	24-FBGA	Now	Mar ‘22
CY15V116QSN-108BKXS	16Mb	Quad SPI	108 MHz	1.71 V	1.89 V	-40 °C to +105 °C	24-FBGA	Now	Mar ‘22



Vehicle Traveling Data Recorder



Infotainment System

EXCELON™ LP F-RAM product selector guide

Non-inrush (Peak) current control option

D+C

Part Number	Density	Interface	Frequency	Min. Supply Voltage	Max. Supply Voltage	Temp	Package	ES	Production
CY15B102QN-50SXI	2Mb	SPI	50 MHz	1.80 V	3.60 V	-40 °C to +85 °C	8-SOIC	-	Now
CY15V102QN-50SXI	2Mb	SPI	50 MHz	1.71 V	1.89 V	-40 °C to +85 °C	8-SOIC	-	Now
CY15B102QN-50LHXI	2Mb	SPI	50 MHz	1.80 V	3.60 V	-40 °C to +85 °C	8-TDFN	-	Now
CY15V102QN-50LHXI	2Mb	SPI	50 MHz	1.71 V	1.89 V	-40 °C to +85 °C	8-TDFN	-	Now
CY15B104QN-20LPXC	4Mb	SPI	20 MHz	1.80 V	3.60 V	0 °C to +70 °C	8-GQFN	-	Now
CY15V104QN-20LPXC	4Mb	SPI	20 MHz	1.71 V	1.89 V	0 °C to +70 °C	8-GQFN	-	Now
CY15B104QN-20LPXI	4Mb	SPI	20 MHz	1.80 V	3.60 V	-40 °C to +85 °C	8-GQFN	-	Now
CY15V104QN-20LPXI	4Mb	SPI	20 MHz	1.71 V	1.89 V	-40 °C to +85 °C	8-GQFN	-	Now
CY15B104QN-50SXI	4Mb	SPI	50 MHz	1.80 V	3.60 V	-40 °C to +85 °C	8-SOIC	-	Now
CY15V104QN-50SXI	4Mb	SPI	50 MHz	1.71 V	1.89 V	-40 °C to +85 °C	8-SOIC	-	Now
CY15B104QN-50LPXI	4Mb	SPI	50 MHz	1.80 V	3.60 V	-40 °C to +85 °C	8-GQFN	-	Now
CY15V104QN-50LPXI	4Mb	SPI	50 MHz	1.71 V	1.89 V	-40 °C to +85 °C	8-GQFN	-	Now
CY15B108QN-20LPXC	8Mb	SPI	20 MHz	1.80 V	3.60 V	0 °C to +70 °C	8-GQFN	-	Now
CY15V108QN-20LPXC	8Mb	SPI	20 MHz	1.71 V	1.89 V	0 °C to +70 °C	8-GQFN	-	Now
CY15B108QN-20LPXI	8Mb	SPI	20 MHz	1.80 V	3.60 V	-40 °C to +85 °C	8-GQFN	-	Now
CY15V108QN-20LPXI	8Mb	SPI	20 MHz	1.71 V	1.89 V	-40 °C to +85 °C	8-GQFN	-	Now
CY15B108QN-40SXI	8Mb	SPI	40 MHz	1.80 V	3.60 V	-40 °C to +85 °C	8-SOIC	-	Now
CY15B108QN-40LPXI	8Mb	SPI	40 MHz	1.80 V	3.60 V	-40 °C to +85 °C	8-GQFN	-	Now
CY15V108QN-40LPXI	8Mb	SPI	40 MHz	1.71 V	1.89 V	-40 °C to +85 °C	8-GQFN	-	Now
CY15B108QN-50BKXI	8Mb	SPI	50 MHz	1.80 V	3.60 V	-40 °C to +85 °C	24-FBGA	Now	Feb ‘22
CY15V108QN-50BKXI	8Mb	SPI	50 MHz	1.71 V	1.89 V	-40 °C to +85 °C	24-FBGA	Now	Feb ‘22
CY15B108QN-50BKXQ	8Mb	SPI	50 MHz	1.80 V	3.60 V	-40 °C to +105 °C	24-FBGA	Now	Feb ‘22
CY15V108QN-50BKXQ	8Mb	SPI	50 MHz	1.71 V	1.89 V	-40 °C to +105 °C	24-FBGA	Now	Feb ‘22
CY15B116QN-40BKXI	16Mb	SPI	40 MHz	1.80 V	3.60 V	-40 °C to +85 °C	24-FBGA	Now	Feb ‘22
CY15V116QN-40BKXI	16Mb	SPI	40 MHz	1.71 V	1.89 V	-40 °C to +85 °C	24-FBGA	Now	Feb ‘22

EXCELON™ LP F-RAM product selector guide

Inrush (Peak) current control option

D+C

Part Number	Density	Interface	Frequency	Min. Supply Voltage	Max. Supply Voltage	Temp	Package	ES	Production
CY15B104QI-20LPXC	4Mb	SPI	20 MHz	1.80 V	3.60 V	0 °C to +70 °C	8-GQFN	-	Now
CY15V104QI-20LPXC	4Mb	SPI	20 MHz	1.71 V	1.89 V	0 °C to +70 °C	8-GQFN	-	Now
CY15B104QI-20LPXI	4Mb	SPI	20 MHz	1.80 V	3.60 V	-40 °C to +85 °C	8-GQFN	-	Now
CY15V104QI-20LPXI	4Mb	SPI	20 MHz	1.71 V	1.89 V	-40 °C to +85 °C	8-GQFN	-	Now
CY15B108QI-20LPXC	8Mb	SPI	20 MHz	1.80 V	3.60 V	0 °C to +70 °C	8-GQFN	-	Now
CY15V108QI-20LPXC	8Mb	SPI	20 MHz	1.71 V	1.89 V	0 °C to +70 °C	8-GQFN	-	Now
CY15B108QI-20LPXI	8Mb	SPI	20 MHz	1.80 V	3.60 V	-40 °C to +85 °C	8-GQFN	-	Now
CY15V108QI-20LPXI	8Mb	SPI	20 MHz	1.71 V	1.89 V	-40 °C to +85 °C	8-GQFN	-	Now
CY15B116QI-20BKXC	16Mb	SPI	20 MHz	1.80 V	3.60 V	0 °C to +70 °C	24-FBGA	Now	Feb ‘22
CY15V116QI-20BKXC	16Mb	SPI	20 MHz	1.71 V	1.89 V	0 °C to +70 °C	24-FBGA	Now	Feb ‘22



Neuromodulator



Smartwatch



Part of your life. Part of tomorrow.