**Please note that Cypress is an Infineon Technologies Company.**
The document following this cover page is marked as “Cypress” document as this is the company that originally developed the product. Please note that Infineon will continue to offer the product to new and existing customers as part of the Infineon product portfolio.

**Continuity of document content**
The fact that Infineon offers the following product as part of the Infineon product portfolio does not lead to any changes to this document. Future revisions will occur when appropriate, and any changes will be set out on the document history page.

**Continuity of ordering part numbers**
Infineon continues to support existing part numbers. Please continue to use the ordering part numbers listed in the datasheet for ordering.

# THIS SPEC IS OBSOLETE

Spec No: 001-66311

Spec Title: TIMING RECOMMENDATIONS FOR BYTE ENABLES AND CHIP ENABLES IN MOBL(R) SRAMS - AN66311

Sunset Owner: Anuj Chakrapani (AJU)

Replaced by: NONE

COMMENT: The issue described in the rest of this document has been fixed, and devices with this fix are in production. The table below shows the date code marking on the devices that contain the fix. The first two digits represent the year, and the next two represent the workweek. For example, 1301 refers to the first week of year 2013. Devices with workweek on or after 1301 (like 1303, 1306 etc) contain the fix.
To know if you are affected by this issue, please feel free to create a Technical Support case on the website (www.cypress.com/support)

| **Device** | **Fixed device from date code starting** |
|---|---|
| 2 Mbit<br>(CY62136ESL, CY62136EV30, CY62136FV30, CY62137EV30, CY62137FV18, CY62137FV30, CY62138EV30, CY62138FV30, CY62138F) | 1301 |
| 4 Mbit<br>(CY62146E, CY62146ESL, CY62146EV30, CY62147EV30, CY62148ESL, CY62148EV30, CY62148E, CY62147EV18) | 1301 |
| 8 Mbit<br>(CY62157EV30, CY62157ESL, CY62157EV18, CY62157E, CY62158E, CY62158EV30) | 1301 |
| 16 Mbit<br>(CY62167E, CY62167EV18, CY62167EV30, CY62168EV30) | 1301 |
| 32 Mbit<br>(CY62177EV30, CY62177ESL) | 1301 |
| 64 Mbit<br>(CY62187EV30) | 1445 |

# Timing Recommendations for Byte Enables and Chip Enables in MoBL® SRAMs

**Author: Anuj Chakrapani**
**Associated Project: No**
**Associated Part Family: CY62136ESL, CY62136EV30, CY62136FV30, CY62137EV30, CY62137FV18, CY62137FV30, CY62138EV30, CY62138FV30, CY62138F, CY62146E, CY62146ESL, CY62146EV30, CY62147EV30, CY62148ESL, CY62148EV30, CY62148E, CY62147EV18, CY62157EV30, CY62157ESL, CY62157EV18, CY62157E, CY62158E, CY62158EV30, CY62167E, CY62167EV18, CY62167EV30, CY62168EV30, CY62177EV30, CY62177ESL, CY62187EV30**
**Related Application Notes: None**

OBSOLETE


## Abstract

AN66311 provides timing recommendations for the use of byte enable pins ( $\overline{BHE}$ and $\overline{BLE}$ ) and chip enables (single or dual, as applicable) in select Cypress MoBL® SRAMs. However, the issue responsible for the recommendations provided in this document has been fixed. Hence, Cypress devices with newer date code do not require you to implement these timing recommendations in your design. The nature of this fix is transparent to a user. If you were unaffected by this issue earlier, the fix will not affect you either. This fix does not affect any of the datasheet parameters or functionality of the devices.

If you have any queries about the content in this document, please contact us at www.cypress.com/support.


## Introduction

Cypress's 90-nm MoBL® SRAMs have best-in-class standby power. Their low standby currents ($I_{SB}$) make them ideal for use in low-power battery-operated applications.

This application note discusses certain timing recommendations that you must consider when designing in these SRAMs. The first section of this document provides timing recommendations related to byte enables and is applicable to the following parts:

- 2-Mbit (CY62137EV30, CY62137FV30, CY62137FV18)
- 4-Mbit (CY62147EV30, CY62147EV18)
- 8-Mbit (CY62157EV30, CY62157ESL, CY62157EV18, CY62157E)
- 16-Mbit (CY62167EV30, CY62167EV18, CY62167E)
- 32-Mbit (CY62177EV30, CY62177ESL)
- 64-Mbit (CY62187EV30)

These SRAMs have a byte power-down feature, which means that if the byte enable pins ( $\overline{BHE}$ and $\overline{BLE}$ ), used to control the I/Os) are disabled, the device switches to standby mode, regardless of the state of the chip enable pins ( $\overline{CE}$ , $\overline{CE}_1$, or $CE_2$). This feature creates significant power savings for the application because the device switches seamlessly from active mode to standby mode and vice versa.

The second section of this document provides timing recommendations related to chip enables and is applicable to the following parts:

- 2-Mbit (CY62136ESL, CY62136EV30, CY62136FV30, CY62137EV30, CY62137FV18, CY62137FV30, CY62138EV30, CY62138FV30, CY62138F)
- 4-Mbit (CY62146E, CY62146ESL, CY62146EV30, CY62147EV30, CY62148ESL, CY62148EV30, CY62148E, CY62147EV18)
- 8-Mbit (CY62157EV30, CY62157ESL, CY62157EV18, CY62157E, CY62158E, CY62158EV30)
- 16-Mbit (CY62167E, CY62167EV18, CY62167EV30, CY62168EV30)
- 32-Mbit (CY62177EV30, CY62177ESL)
- 64-Mbit (CY62187EV30)

# Overview

## Byte Enables ( $\overline{\text{BHE}}$ / $\overline{\text{BLE}}$ ) Timing Recommendation

During normal device operation, you should avoid a skew of less than 5 ns between the byte enable pins ( $\overline{\text{BHE}}$ with reference to $\overline{\text{BLE}}$, or vice versa) when switching in the opposite direction.

This condition on the byte enable pins is illustrated in Figure 1.

Figure 1. Narrow (< 5 ns) Skew between Byte Enables

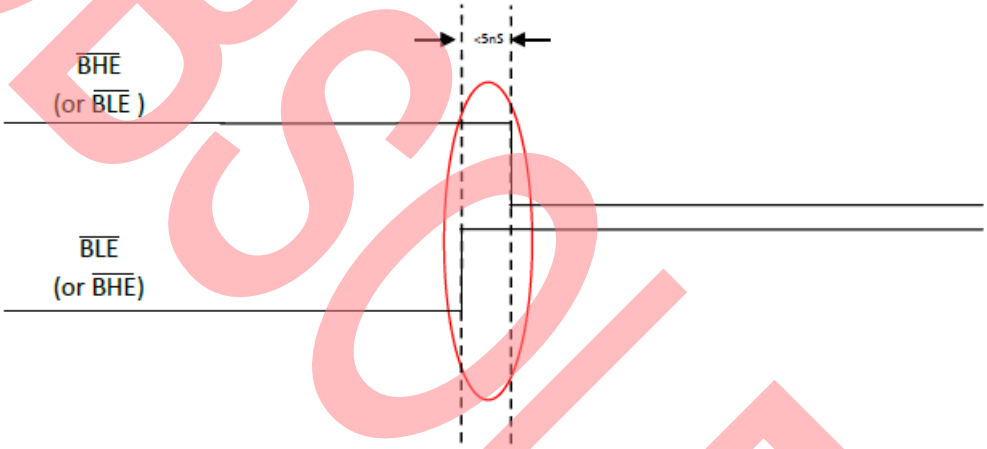


If the condition (shown in) on the byte enable pins $\overline{\text{BHE}}$ and $\overline{\text{BLE}}$ is unavoidable, Cypress recommends that you not switch the Address lines in the vicinity (–5 ns to +15 ns window) of the byte enable signals.

Figure 2 illustrates a condition in which the SRAM address lines are switched in the vicinity (–5 ns to +15 ns window) of the switching of the byte enables $\overline{\text{BHE}}$ and $\overline{\text{BLE}}$. When this happens, the data held in the previous location may be written into the new location being accessed, even though the device is not in a WRITE mode. Thus, the contents of the new location may be corrupted internally.

OBSOLETE

Figure 2. Example of Unintended Data Corruption when Address Lines are Switched in the Vicinity of Narrow (< 5 ns) Skew between Byte Enables

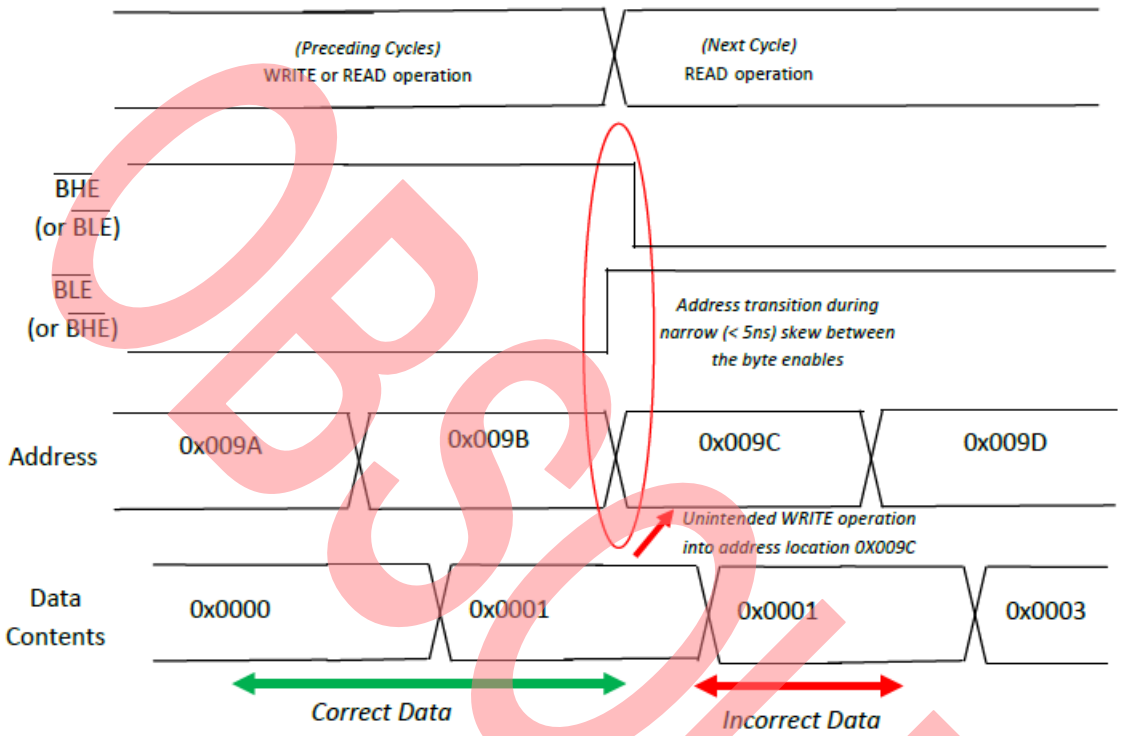


**Note** In this example, expected data: (0x009A) = 0x0000; (0x009B) = 0x0001; (0x009C) = 0x0002; (0x009D) = 0x0003

This is only an issue when the Address lines switch in the vicinity (–5 ns to +15 ns window) of a narrow (< 5 ns) skew between the byte enables. If either condition does not occur (that is, if there is no skew < 5 ns between the byte enables or if the Address lines do not switch in the vicinity of the narrow skew), there is no unintended data corruption. Therefore, if the narrow skew between byte enables is unavoidable in the application, it is strongly recommended that you avoid switching the Address lines in the vicinity of the skew. Examples are shown in Figure 3 and Figure 4.

OBSOLETE

Figure 3. Timing Diagram showing Recommended Address Transition before Narrow (< 5 ns) Skew between Byte Enables

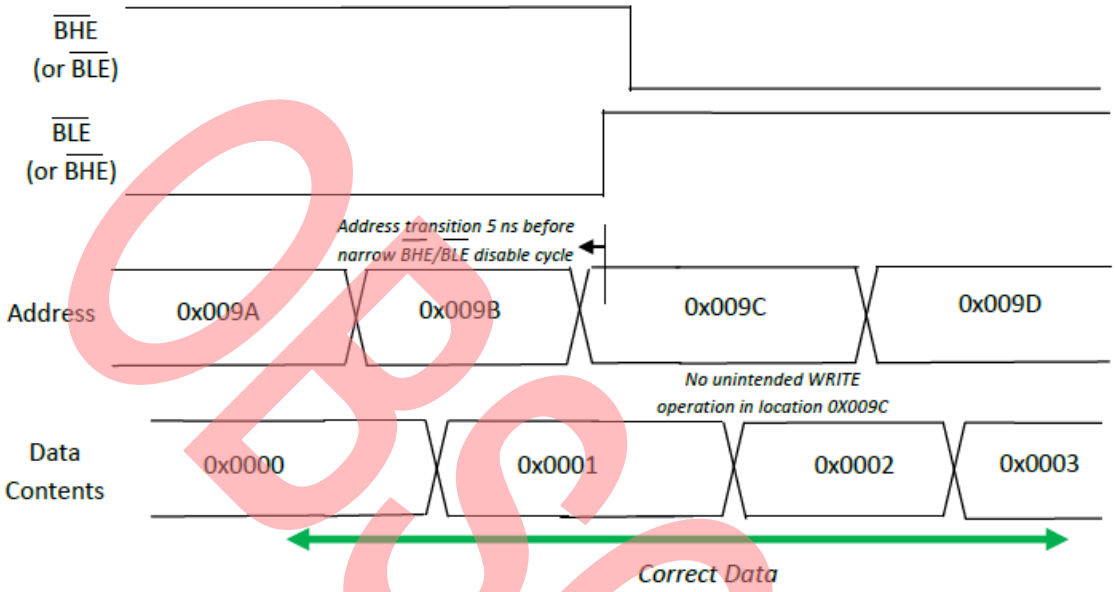


Figure 4. Timing Diagram showing Recommended Address Transition after Narrow (< 5 ns) Skew between Byte Enables

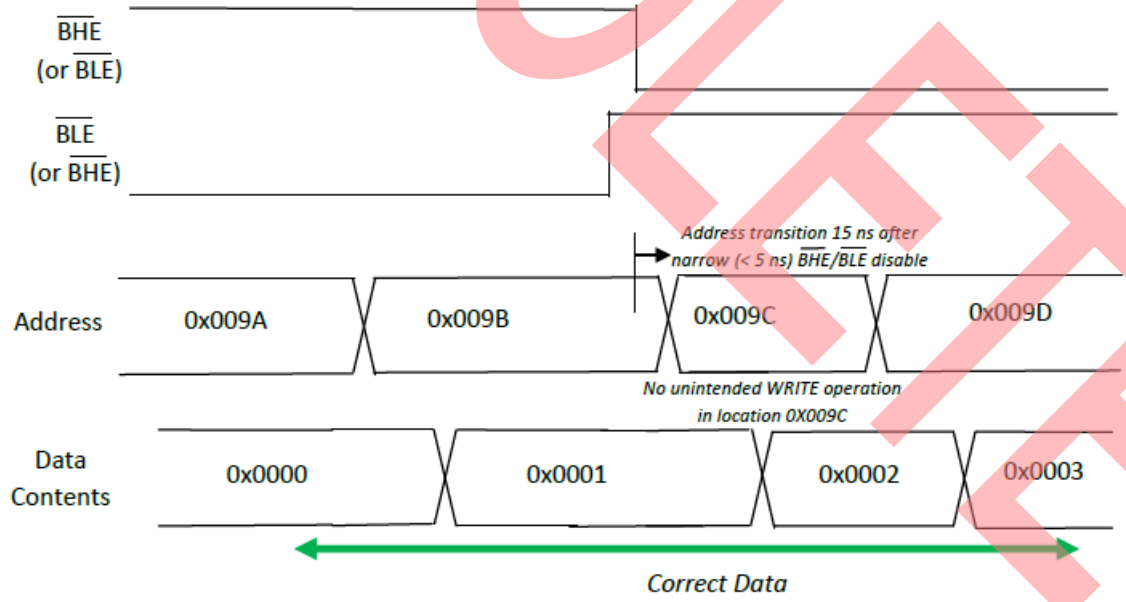


OBSOLETE

## Chip Enable ( $\overline{CE}$ , $\overline{CE}_1$, $CE_2$) Timing Recommendation

The scenario of unintended data corruption may also arise in a very specific application condition in which Address lines switch simultaneously with Chip Enables ( $\overline{CE}$ , $\overline{CE}_1$, or $CE_2$, as the case may be) when the latter initiates a chip deselect cycle.

Switching either of these lines (Address lines and Chip Enable lines) simultaneously could result in the new address location being selected before the internal data lines are cleared (in preparation for the operation). This could, in turn, cause an unintended WRITE operation into the new location. The effect is shown in Figure 5.

A suggested workaround (shown in Figure 6) is to avoid simultaneous switching of Address and Chip Enable signals when entering a chip deselect cycle by skewing either the Address lines or the Chip Enable signals by 3 ns. If any of these trigger conditions do not occur, you will not need this workaround because data is not corrupted.

Figure 5. Example of Unintended Data Corruption when Address Lines are switched in the Vicinity of Chip Deselect Initiation

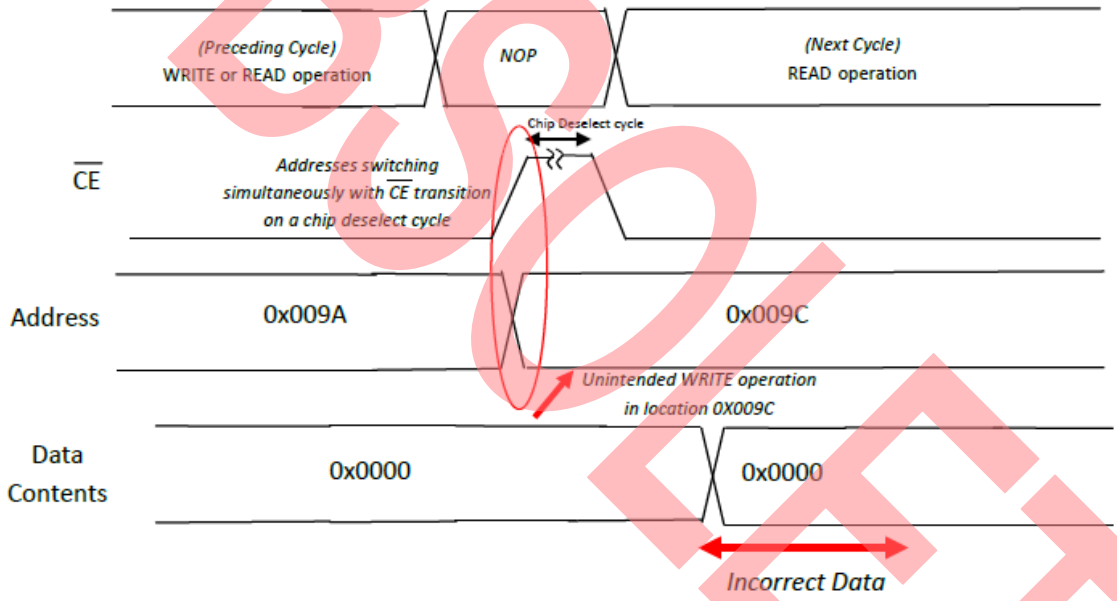


**Notes**

1. In the example above, expected data: (0x009A) = 0x0000; (0x009C) = 0x0002
2. NOP means that the SRAM is externally neither in a WRITE mode, nor in a READ mode.
3. The $\overline{CE}$ illustration in Figure 5 also applies to active low $\overline{CE}_1$ and active high $CE_2$ for dual chip enable devices.

OBSOLETE

Figure 6. Timing Diagram showing Recommended Address Transition 3 ns before Chip Deselect Initiation

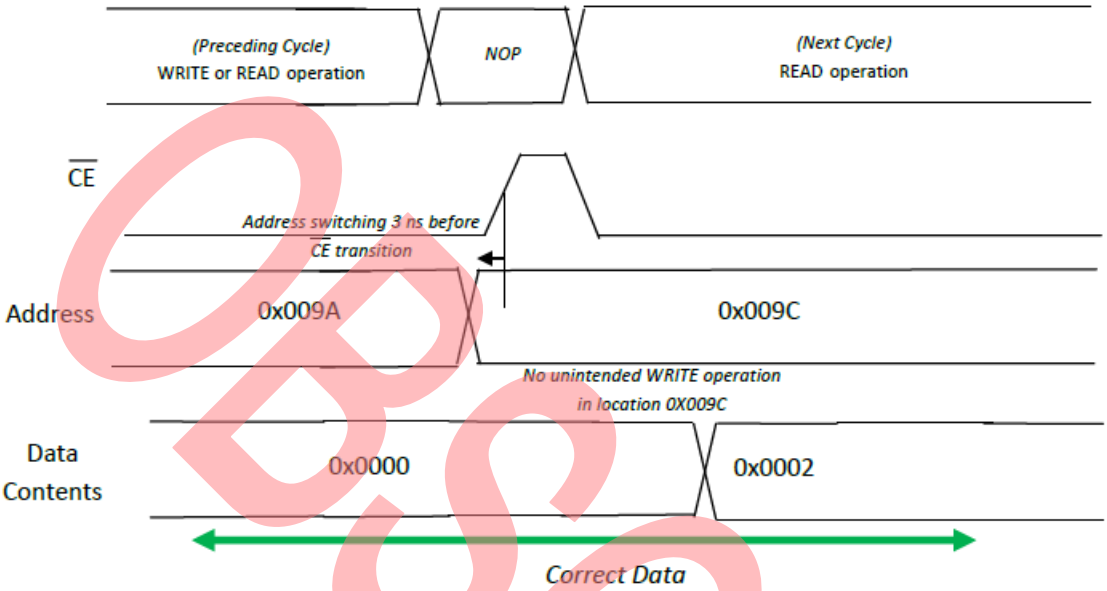


OBSOLETE

**Notes**

1. NOP means that the SRAM is externally neither in a WRITE mode, nor in a READ mode.
2. The $\overline{CE}$ illustration in Figure 6 also applies to active low $\overline{CE}_1$ and active high $CE_2$ for dual chip enable devices.

## Summary

Under the conditions discussed in this application note, the above timing considerations can be made to avoid data corruption. If the input conditions are not as described, you do not need to consider these recommendations.

## About the Author


| | |
|---|---|
| Name: | Anuj Chakrapani |
| Title: | Product Apps Manager |
| Contact: | aju@cypress.com |

## Document History

Document Title: Timing Recommendations for Byte Enables and Chip Enables in MoBL® SRAMs - AN66311

Document Number: 001-66311

| Revision | ECN | Orig. of Change | Submission Date | Description of Change |
|---|---|---|---|---|
| ** | 3132892 | AJU | 01/10/2011 | New application note. |
| *A | 3289141 | AJU | 06/21/2011 | Updated application note with Chip Enable related information. |
| *B | 3338018 | AJU | 08/05/2011 | Updated Abstract.<br>Updated the sections Byte Enables ( $\overline{BHE}$ / $\overline{BLE}$ ) Timing Recommendation and Chip Enable ( $\overline{CE}$ , $\overline{CE}_1$, $CE_2$) Timing Recommendation under the main section Overview. |
| *C | 3723119 | AJU | 09/03/2012 | Updated all the figures in this application note.<br>Updated in new template. |
| *D | 3940344 | NILE | 03/21/2013 | Major rewrite of Abstract. |
| *E | 4054177 | AJU | 07/24/2013 | Removed references to 1Mbit SRAM devices<br>Obsolete application note. |

OBSOLETE

## Worldwide Sales and Design Support

Cypress maintains a worldwide network of offices, solution centers, manufacturer's representatives, and distributors. To find the office closest to you, visit us at Cypress Locations.

### Products

| | |
|---|---|
| Automotive | cypress.com/go/automotive |
| Clocks & Buffers | cypress.com/go/clocks |
| Interface | cypress.com/go/interface |
| Lighting & Power Control | cypress.com/go/powerpsoc<br>cypress.com/go/plc |
| Memory | cypress.com/go/memory |
| Optical Navigation Sensors | cypress.com/go/ons |
| PSoC | cypress.com/go/psoc |
| Touch Sensing | cypress.com/go/touch |
| USB Controllers | cypress.com/go/usb |
| Wireless/RF | cypress.com/go/wireless |

### PSoC® Solutions

psoc.cypress.com/solutions

PSoC 1 | PSoC 3 | PSoC 5

### Cypress Developer Community

Community | Forums | Blogs | Video | Training

### Technical Support

cypress.com/go/support

OBSOLETE

MoBL is a registered trademark of Cypress Semiconductor Corp. All other trademarks or registered trademarks referenced herein are the property of their respective owners.

Cypress Semiconductor
198 Champion Court
San Jose, CA 95134-1709

Phone : 408-943-2600
Fax : 408-943-4730
Website : www.cypress.com

© Cypress Semiconductor Corporation, 2011-2013. The information contained herein is subject to change without notice. Cypress Semiconductor Corporation assumes no responsibility for the use of any circuitry other than circuitry embodied in a Cypress product. Nor does it convey or imply any license under patent or other rights. Cypress products are not warranted nor intended to be used for medical, life support, life saving, critical control or safety applications, unless pursuant to an express written agreement with Cypress. Furthermore, Cypress does not authorize its products for use as critical components in life-support systems where a malfunction or failure may reasonably be expected to result in significant injury to the user. The inclusion of Cypress products in life-support systems application implies that the manufacturer assumes all risk of such use and in doing so indemnifies Cypress against all charges.
This Source Code (software and/or firmware) is owned by Cypress Semiconductor Corporation (Cypress) and is protected by and subject to worldwide patent protection (United States and foreign), United States copyright laws and international treaty provisions. Cypress hereby grants to licensee a personal, non-exclusive, non-transferable license to copy, use, modify, create derivative works of, and compile the Cypress Source Code and derivative works for the sole purpose of creating custom software and or firmware in support of licensee product to be used only in conjunction with a Cypress integrated circuit as specified in the applicable agreement. Any reproduction, modification, translation, compilation, or representation of this Source Code except as specified above is prohibited without the express written permission of Cypress.
Disclaimer: CYPRESS MAKES NO WARRANTY OF ANY KIND, EXPRESS OR IMPLIED, WITH REGARD TO THIS MATERIAL, INCLUDING, BUT NOT LIMITED TO, THE IMPLIED WARRANTIES OF MERCHANTABILITY AND FITNESS FOR A PARTICULAR PURPOSE. Cypress reserves the right to make changes without further notice to the materials described herein. Cypress does not assume any liability arising out of the application or use of any product or circuit described herein. Cypress does not authorize its products for use as critical components in life-support systems where a malfunction or failure may reasonably be expected to result in significant injury to the user. The inclusion of Cypress' product in a life-support systems application implies that the manufacturer assumes all risk of such use and in doing so indemnifies Cypress against all charges.
Use may be limited by and subject to the applicable Cypress software license agreement.