FM25V01 replaces two FM25CL64s

About this document

Scope and purpose

AN311 discusses the key differences which need to be considered when migrating from FM25CL64 to FM25V01.

Associated part family

FM25V01, FM25CL64

Table of contents

About this document . . . 1
Table of contents . . . 2
1 Introduction . . . 3
2 Backward compatible . . . 4
3 Critical considerations . . . 7
4 Read / Write function . . . 8
5 Standby Current / Sleep Mode Current . . . 9
6 V_{DD} Ramp Rate . . . 10
7 Power-Up to first access . . . 11
8 Conclusion . . . 12
Revision history . . . 13
Disclaimer . . . 14

1 Introduction

The FM25V01, a 128-Kbit SPI F-RAM, is a potential replacement for two FM25CL64 (64-Kbit) devices; FM25CL64 is now obsolete. For most designs, the FM25V01 device can be considered a superset of the FM25CL64. The two devices are identical in terms of pinout, package dimensions, and read/write functionality. This application note discusses the key differences between the two devices, apart from density, which need to be considered when migrating from FM25CL64 to FM25V01.

2 Backward compatible

From a software point of view, the two devices are compatible. Aside from the additional address bit to access twice the memory, the two devices are read / write compatible. Both devices use the same two-byte address. Remember that the 128-Kbit device address wraps at 0x3FFF while the 64-Kbit wraps at 0x1FFF. The block protect boundaries are spaced at twice the address, compared to the 64-Kbit device. For systems that use a single FM25CL64 device, the transition to the FM25V01 could be as straightforward as changing your firmware to hold the address bit A13 LOW during SRAM read/writes. For systems that use two FM25CL64s, firmware needs to be modified to use the address bit A13 to access the full 128-Kbit memory.

From a hardware point of view, the key difference between the two devices is the higher standby current. Additionally FM25V01 operates down to 2.0 V, extends the speed up to 40 MHz and adds Device ID, Sleep Mode features. It also adds power-up, power-down ramp rate and first access time (after power-up) specifications. A memory write operation is given in Figure 1 for FM25V01. Note the addition of address bit A13 in the serial address stream. This is the MSB bit for the 128-Kbit devices. A compatibility chart for the two devices is given in Table 1. A detailed comparison is shown in Table 2.

Table 1 Compatibility chart

FM25CL64 feature or spec	Is FM25V01 compatible?
Package	Yes
Pinout	Yes
Temperature Range	Yes
Operating Voltage	Yes
Operating Current	Yes
Standby Current	No
Read / Write Function	Yes
Timing / Frequency	Yes
Data Retention	Refer to Table 2
Endurance	Yes

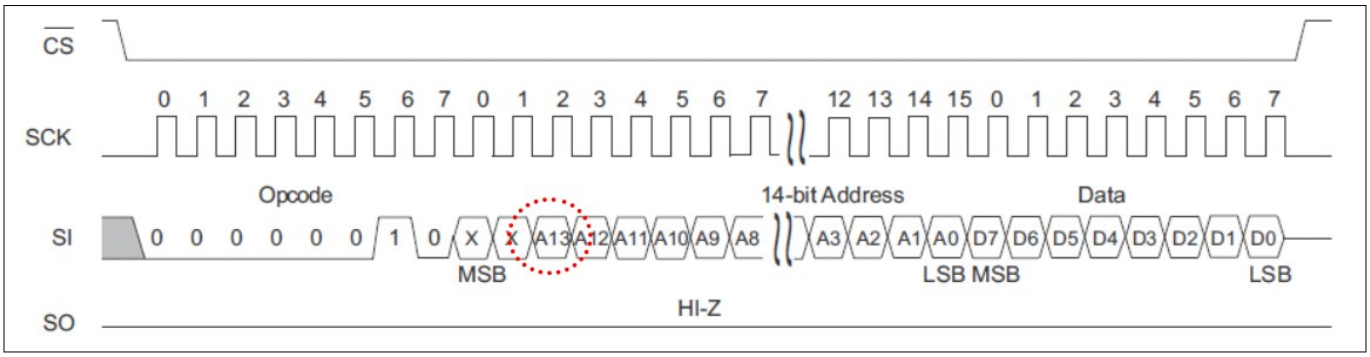

Figure 1 FM25V01 Write Cycle (WREN not shown)

2 Backward compatible

Table 2 Detailed comparison

	FM25CL64	FM25V01	Comments
Package types	-G, -DG	-G	Same “green” SOIC package. FM25V01 is not offered in “green” TDFN package.
Package outlines	SOIC-8, TDFN-8	SOIC-8	Same outline and board footprint for SOIC. FM25V01 is not offered in “green” TDFN package.
Pinout	-	-	Same
Temperature range	–40°C to +85°C	–40°C to +85°C	Same
Operating voltage range	2.7 V to 3.65 V	2.0 V to 3.6 V	FM25V01 allows operation down to 2.0 V
Active supply current	350 µA @ 1 MHz 7 mA @ 20 MHz	220 µA @ 1 MHz 2.5 mA @ 40 MHz	FM25V01 offers lower active current
Standby current	1 µA	150 µA	FM25V01 has higher standby current
Sleep mode current	-	8 µA	FM25V01 offers a sleep mode which can be used to reduce the standby/ idle current. During wake-up from sleep mode, the device needs a recovery time of 400 µs.
Read / Write function	-	-	Same 2-byte addressing, same op-codes
Clock frequency	20 MHz	40 MHz	FM25V01 supports higher speed
Data retention	45 years (+85°C)	10 years (+85°C) 38 years (+75°C)	
Endurance	Unlimited	1E+14	FM25V01’s endurance is large enough to be considered as unlimited for all practical applications. For a 64-byte loop, at 40 MHz, the FM25V01’s endurance is 43 years.
V_{DD} Power-Up Ramp Rate (t_{VR})	-	50 µs / V	Power-up ramp rate should be slower than 50 µs / V for FM25V01

(table continues...)

2 Backward compatible

Table 2 (continued) Detailed comparison

	FM25CL64	FM25V01	Comments
V_{DD} Power-Down Ramp Rate (t_{VF})	-	100 µs / V	Power-down ramp rate should be slower than 100 µs / V for FM25V01
Power-Up to first access (t_{PU})	-	250 µs	After power-up, the first access of FM25V01 should be after 250 µs

3 Critical considerations

All the parameter differences in Table 2 should be considered during the migration to FM25V01. The critical differences are discussed in this section. System designers are also recommended to review the detailed datasheets when migrating to the new part.

4 Read / Write function

The FM25V01 device has an extra address bit, A13, to support the additional 64-Kbit memory when compared to the FM25CL64. Setting A13 to a 0 level will address the 64-Kbits of your current FM25CL64 application. Setting A13 to a 1 level will address the additional 64-Kbits of the FM25V01. Note that roll over will not happen at 0x1FFF in FM25V01; instead it will roll over at 0x3FFF.

5 Standby Current / Sleep Mode Current

The FM25V01 has higher standby current of 150 µA compared to 1 µA of FM25CL64. But FM25V01 offers an additional sleep mode feature which can be used to reduce the standby/idle current. The sleep mode current is 8 µA. Note that during wake-up from sleep mode, the device needs a recovery time of 400 µs.

6 V_{DD} Ramp Rate

V_{DD} power-up and power-down ramp rate specifications are added in FM25V01 device. Ensure that the power-up ramp rate is slower than 50 µs / V and power-down ramp rate is slower than 100 µs / V in your system.

7 Power-Up to first access

Power-up to first access specification is added in FM25V01 device. Ensure that the FM25V01 device is accessed only after 250 µs from power-up.

8 Conclusion

AN311 discusses the differences between FM25V01 and FM25CL64 which need to be considered during migration.

Revision history

Document version	Date of release	Description of changes
**	2013-03-26	New Spec.
*A	2014-03-07	Updated to Cypress Template. Added Compatibility Table and Detailed Comparison Table.
*B	2026-07-16	Template update, no content update

Trademarks

All referenced product or service names and trademarks are the property of their respective owners.

Edition 2026-07-16

Published by

Infineon Technologies AG

81726 Munich, Germany

© 2026 Infineon Technologies AG

All Rights Reserved.

Do you have a question about any aspect of this document?

Email: erratum@infineon.com

Document reference
IFX-qaf1768992379291

Important notice

Products which may also include samples and may be comprised of hardware or software or both ("Product(s)") are sold or provided and delivered by Infineon Technologies AG and its affiliates ("Infineon") subject to the terms and conditions of the frame supply contract or other written agreement(s) executed by a customer and Infineon or, in the absence of the foregoing, the applicable Sales Conditions of Infineon. General terms and conditions of a customer or deviations from applicable Sales Conditions of Infineon shall only be binding for Infineon if and to the extent Infineon has given its express written consent.

For the avoidance of doubt, Infineon disclaims all warranties of non-infringement of third-party rights and implied warranties such as warranties of fitness for a specific use/purpose or merchantability. Infineon shall not be responsible for any information with respect to samples, the application or customer's specific use of any Product or for any examples or typical values given in this document.

If this document is marked as 'Preliminary', 'Target', 'Draft' or 'Proposal', Infineon reserves the right to change all information given in this document at any time without notice. Subject to the development and release of a Product for series supply by Infineon, the technical specifications of the Product are set forth in the relevant datasheet provided by Infineon without such marking.

The data contained in this document is exclusively intended for technically qualified and skilled customer representatives. It is the responsibility of the customer to evaluate the suitability of the Product for the intended application and the customer's specific use and to verify all relevant technical data contained in this document in the intended application and the customer's specific use. The customer is responsible for properly designing, programming, and testing the functionality and safety of the intended application, as well as complying with any legal requirements related to its use.

Unless otherwise explicitly approved by Infineon, Products may not be used in any application where a failure of the Products or any consequences of the use thereof can reasonably be expected to result in personal injury.

However, the foregoing shall not prevent the customer from using any Product in such fields of use that Infineon has explicitly designed and sold it for, provided that the overall responsibility for the application lies with the customer. Infineon expressly reserves the right to use its content for commercial text and data mining (TDM) according to applicable laws, e.g. Section 44b of the German Copyright Act (UrhG). If the Product includes security features:

Because no computing device can be absolutely secure, and despite security measures implemented in the Product, Infineon does not guarantee that the Product will be free from intrusion, data theft or loss, or other breaches ("Security Breaches"), and Infineon shall have no liability arising out of any Security Breaches.

If this document includes or references software:

The software is owned by Infineon under the intellectual property laws and treaties of the United States, Germany, and other countries worldwide. All rights reserved. Therefore, you may use the software only as provided in the software license agreement accompanying the software.

If no software license agreement applies, Infineon hereby grants you a personal, non-exclusive, non-transferable license (without the right to sublicense) under its intellectual property rights in the software (a) for software provided in source code form, to modify and reproduce the software solely for use with Infineon hardware products, only internally within your organization, and (b) to distribute the software in binary code form externally to end users, solely for use on Infineon hardware products. Any other use, reproduction, modification, translation, or compilation of the software is prohibited.

For further information on the Product, technology, delivery terms and conditions, and prices, please contact your nearest Infineon office or visit www.infineon.com.